WATER SYSTEM NOTES:

1. NEW OR RELOCATED UNDERGROUND WATER MAINS INCLUDED IN THIS PROJECT THAT WILL CROSS ANY EXISTING OR PROPOSED GRAVITY OR VACUUM-TYPE SANITARY SEWER OR STORM SEWER WITH THE OUTSIDE OF THE WATER MAIN AT LEAST 6 INCHES ABOVE THE OTHER PIPELINE OR AT LEAST 12 INCHES BELOW THE OTHER PIPELINE.

2. NEW OR RELOCATED UNDERGROUND WATER MAINS INCLUDED IN THIS PROJECT THAT WILL CROSS ANY EXISTING OR PROPOSED PRESSURE-TYPE SANITARY SEWER, WASTEWATER OR STORMWATER FORCE MAIN, OR PIPELINE CONVEYING RECLAIMED WATER WILL BE LAID SO THE OUTSIDE OF THE WATER MAIN IS AT LEAST 12 INCHES ABOVE OR BELOW THE OTHER PIPELINE. (F.A.C. 62-555.314(2); EXCEPTIONS ALLOWED UNDER F.A.C. 62-555.314(5)).

3. AT ALL UTILITY CROSSINGS DESCRIBED ABOVE, ONE FULL LENGTH OF WATER MAIN PIPE WILL BE CENTERED ABOVE OR BELOW THE OTHER PIPELINE SO THE WATER MAIN JOINTS WILL BE AS FAR AS POSSIBLE FROM THE OTHER PIPELINE, OR THE PIPES WILL BE ARRANGED SO THAT ALL WATER MAIN JOINTS ARE AT LEAST THREE FEET FROM ALL JOINTS IN VACUUM-TYPE SANITARY SEWERS, STORM SEWERS, STORMWATER FORCE MAINS, OR PIPELINES CONVEYING RECLAIMED WATER REGULATED UNDER PART III OF CHAPTER 62-610, F.A.C., AND AT LEAST SIX FEET FROM ALL JOINTS IN GRAVITY OR PRESSURE-TYPE SANITARY SEWERS, WASTEWATER FORCE MAINS, OR PIPELINES CONVEYING RECLAIMED WATER NOT REGULATED UNDER PART III OF CHAPTER 62-610, F.A.C. (F.A.C. 62-555.314(2), EXCEPTIONS ALLOWED UNDER F.A.C. 62-555.314(5)).

4. NEW UNDERGROUND WATER MAINS INCLUDED IN THIS PROJECT TO BE DUCTILE IRON PIPE (DIP) WHEN CROSSING BELOW SANITARY SEWER MAINS.

5. POLYETHYLENE ENCASEMENT MATERIAL SHALL BE USED TO ENCASE ALL BURIED DUCTILE IRON PIPE, FITTINGS, VALVES, RODS, AND APPURTENANCES IN ACCORDANCE WITH AWWA C105, METHOD A. THE POLYETHYLENE TUBING SHALL BE CUT TWO FEET LONGER THAN THE PIPE SECTION AND SHALL OVERLAP THE ENDS OF THE PIPE BY ONE FOOT. THE POLYETHYLENE TUBING SHALL BE GATHERED AND LAPPED TO PROVIDE A SNUG FIT AND SHALL BE SECURED AT QUARTER POINTS WITH POLYETHYLENE TAPE. EACH END OF THE POLYETHYLENE TUBING SHALL BE SECURED WITH A WRAP OF POLYETHYLENE TAPE.

6. THE POLYETHYLENE TUBING SHALL PREVENT CONTACT BETWEEN THE PIPE AND BEDDING MATERIAL, BUT IS NOT INTENDED TO BE A COMPLETELY AIRTIGHT AND WATERTIGHT ENCLOSURE. DAMAGED POLYETHYLENE TUBING SHALL BE REPAIRED IN A WORKMANLIKE MANNER USING POLYETHYLENE TAPE OR THE DAMAGED SECTION SHALL BE REPLACED. POLY WRAP WILL NOT BE PAID FOR AS A SEPARATE BID ITEM. IT SHALL BE CONSIDERED TO BE A PART OF THE PRICE BID FOR WATER MAINS.

7. FIRE HYDRANT BARRELS SHALL BE ENCASED IN POLY WRAP UP TO THE GROUND SURFACE AND THE WEEP HOLES SHALL NOT BE COVERED BY THE POLY WRAP.

8. GATE VALVES FOR USE WITH PIPE LESS THAN THREE INCHES (3") IN DIAMETER SHALL BE RATED FOR TWO HUNDRED (200) PSI WORKING PRESSURE, NON-SHOCK, BLOCK PATTERN, SCREWED BONNET, NON-RISING STEM, BRASS BODY, AND SOLID WEDGE. THEY SHALL BE STANDARD THREADED FOR PIPE AND HAVE A MALLEABLE IRON HANDWHEEL. GATE VALVES 3" THROUGH 12" IN DIAMETER SHALL BE RESILIENT SEAT AND BIDIRECTIONAL FLOW ONLY. VALVES FOR SPECIAL APPLICATIONS WILL REQUIRE CITY UTILITY APPROVAL.

9. VALVE BOXES AND COVERS FOR ALL SIZE VALVES SHALL BE OF CAST IRON CONSTRUCTION AND ADJUSTABLE SCREW-ON TYPE. THE LID SHALL HAVE CAST IN THE METAL THE WORD "WATER" FOR THE WATER LINES. ALL VALVE BOXES SHALL BE SIX INCH (6") NOMINAL DIAMETER AND SHALL BE SUITABLE FOR DEPTHS OF THE PARTICULAR VALVE. THE STEM OF THE GATE VALVE SHALL BE WITHIN TWENTY-FOUR INCHES (24") OF THE FINISHED GRADE UNLESS OTHERWISE APPROVED BY THE CITY.

10. ALL WATER MAIN INSTALLATIONS SHALL COMPLY WITH THE COLOR CODING REQUIREMENTS OF CHAPTER 62-555.320 F.A.C.

ISSUED: 03-01-904 | DEPARTMENT OF PUBLIC UTILITIES STANDARD DETAIL | REVISED: 06-09-2024
DRAWN: TAH | APPROVED: XXX
WATER SYSTEM NOTES — DRAWING NO. W-01

WATER SYSTEM NOTES (CONTINUED):

11. ALL WATER MAIN INSTALLATIONS SHALL COMPLY WITH THE COLOR CODING REQUIREMENTS OF CHAPTER [illegible]

12. ALL PVC PIPE SHALL CONFORM TO THE REQUIREMENTS OF ANSI/AWWA C900 LATEST REVISION AND CLASS [illegible] ALL DUCTILE IRON PIPE SHALL CONFORM TO THE REQUIREMENTS OF ANSI/AWWA [illegible]

13. FITTINGS SHALL BE DUCTILE IRON, MEETING ANSI/AWWA C153/A21.53-00 SPECIFICATIONS, WITH 350 PSI MINIMUM WORKING PRESSURE. FITTINGS MUST BE CEMENT LINED AND SEAL COATED PER ANSI/AWWA [illegible] AMERICA.

14. ALL DUCTILE IRON PIPE TO BE MECHANICAL JOINTS, WRAPPED IN POLY. ADEQUATE PROTECTIVE MEASURES AGAINST CORROSION [illegible]

15. PAVEMENT RESTORATION SHALL BE CARRIED OUT IN ACCORDANCE WITH THE REQUIREMENTS OF THE CITY.

16. ALL TRENCHING, PIPE LAYING, BACKFILL, PRESSURE TESTING, AND DISINFECTING MUST COMPLY WITH THE CITY OF HOLLYWOOD SPECIFICATIONS.

17. THE MINIMUM DEPTH OF COVER OVER WATER MAINS IS 30" (DIP OR 36" PVC).

18. MINIMUM HORIZONTAL SEPARATION BETWEEN STORM STRUCTURES AND WATER MAINS SHALL BE 3'.

19. [illegible] (MAXIMUM) WHERE DEFLECTION IS REQUIRED.

20. CONTRACTOR SHALL BE RESPONSIBLE FOR IDENTIFYING CONFLICTS WITH WATER MAINS PLACED AT MINIMUM COVER. IN CASE OF CONFLICT, WATER MAIN SHALL BE LOWERED TO PASS UNDER CONFLICTS WITH 18" MINIMUM VERTICAL SEPARATION. NO ADDITIONAL PAYMENT SHALL BE DUE TO CONTRACTOR FOR LOWERING THE MAIN OR THE ADDITIONAL FITTINGS USED THEREIN.

21. PIPE JOINT RESTRAINT SHALL BE PROVIDED BY THE USE OF DUCTILE IRON FOLLOWER GLANDS MANUFACTURED TO ASTM A 536 [illegible] SHALL BE USED TO ENSURE PROPER ACTUATING OF THE RESTRAINING DEVICES. THE MECHANICAL JOINT RESTRAINING DEVICES SHALL HAVE A WORKING [illegible]

22. WHENEVER IT IS NECESSARY, IN THE INTEREST OF SAFETY, TO BRACE THE SIDES OF A TRENCH, THE CONTRACTOR SHALL FURNISH, PUT IN PLACE AND MAINTAIN SUCH SHEETING OR BRACING AS MAY BE NECESSARY TO SUPPORT THE SIDES OF THE EXCAVATION TO ENSURE PERSONNEL SAFETY, AND TO PREVENT MOVEMENT WHICH CAN IN ANY WAY DAMAGE THE WORK OR ENDANGER ADJACENT STRUCTURES. THE CONTRACTOR SHALL BE SOLELY RESPONSIBLE FOR THE SEQUENCE, METHODS AND MEANS OF CONSTRUCTION, AND FOR THE IMPLEMENTATION OF ALL OSHA AND OTHER SAFETY REQUIREMENTS.

ISSUED: 03-01-904 | DEPARTMENT OF PUBLIC UTILITIES STANDARD DETAIL | REVISED: 06-09-2024
DRAWN: TAH | APPROVED: XXX
WATER SYSTEM NOTES — DRAWING NO. W-02

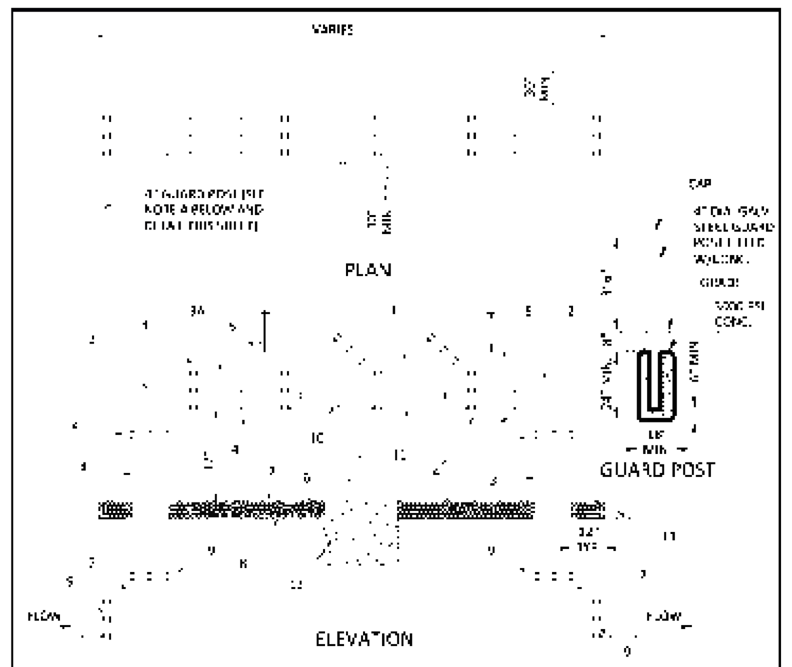

NOTES:
1. FIELD ADJUST AND CUT ITEMS TO THE PROPER LENGTH.
2. ALL PIPING SHALL BE D.I.P. CL 50/52 AS APPLICABLE TO MINIMUM STANDARDS.
3. ALL LOW FLOW METER PIPING SHALL BE BRASS OR COPPER.
4. PROTECTIVE 4" GALV. GUARD POSTS SHALL BE SPACED EVENLY APART AS SHOWN ABOVE OR IN ACCORDANCE WITH INSPECTOR'S DIRECTIONS.
5. MAY USE 45° BENDS (SEE DETAIL W-05) WHEN WORKING AREA IS NOT LIMITED, AS DIRECTED BY CITY.
6. GATE VALVES SHALL BE CHAINED AND LOCKED TOGETHER TO PREVENT TAMPERING.

ISSUED: 03-01-904 | DEPARTMENT OF PUBLIC UTILITIES STANDARD DETAIL | REVISED: 06-09-2024
DRAWN: TAH | APPROVED: XXX
TYPICAL 4", 6" AND 8" DOUBLE CHECK DETECTOR ASSEMBLY FOR FIRE SPRINKLER SERVICE (90° BENDS) — DRAWING NO. W-03

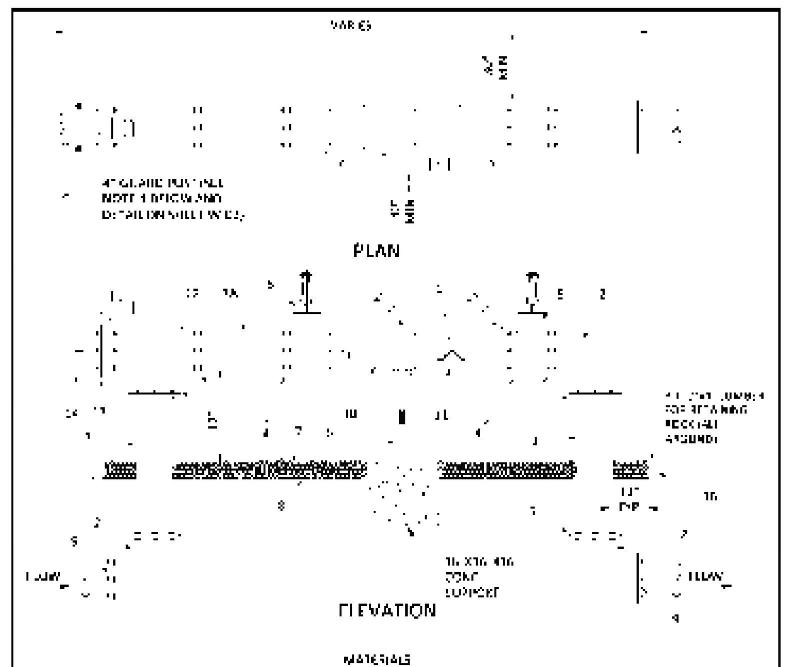

NOTES:
1. FIELD ADJUST AND CUT ITEMS TO THE PROPER LENGTH.
2. ALL PIPING SHALL BE D.I.P. CL 50/52 AS APPLICABLE TO MINIMUM STANDARDS.
3. ALL LOW FLOW METER PIPING SHALL BE BRASS OR COPPER.
4. PROTECTIVE 4" GALV. GUARD POSTS SHALL BE SPACED EVENLY APART AS SHOWN ABOVE OR IN ACCORDANCE WITH INSPECTOR'S DIRECTIONS.
5. MAY USE 45° BENDS (SEE DETAIL W-05) WHEN WORKING AREA IS NOT LIMITED, AS DIRECTED BY CITY.
6. GATE VALVES SHALL BE CHAINED AND LOCKED TOGETHER TO PREVENT TAMPERING.

ISSUED: 03-01-904 | DEPARTMENT OF PUBLIC UTILITIES STANDARD DETAIL | REVISED: 06-09-2024
DRAWN: TAH | APPROVED: XXX
TYPICAL 4", 6" AND 8" DOUBLE CHECK DETECTOR FOR FIRE SPRINKLER SERVICE W/B.V. CONNECTION (90° BENDS) — DRAWING NO. W-04

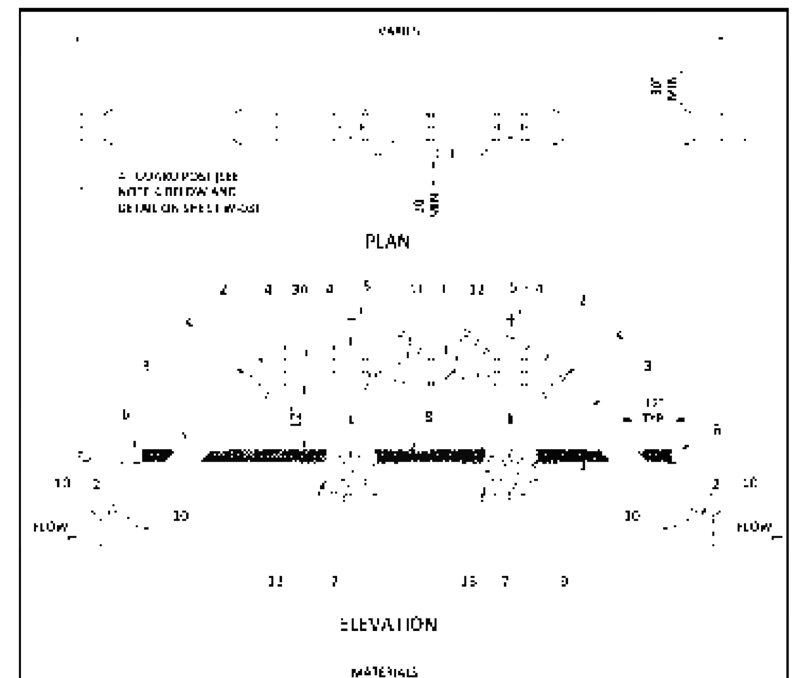

NOTES:
1. FIELD ADJUST AND CUT ITEMS TO THE PROPER LENGTH.
2. ALL PIPING SHALL BE D.I.P. CL 50/52 AS APPLICABLE TO MINIMUM STANDARDS.
3. ALL LOW FLOW METER PIPING SHALL BE BRASS OR COPPER.
4. PROTECTIVE 4" GALV. GUARD POSTS SHALL BE SPACED EVENLY APART AS SHOWN ABOVE OR IN ACCORDANCE WITH INSPECTOR'S DIRECTIONS.
5. MAY USE 90° BENDS (SEE DETAIL W-03) WHEN WORKING AREA IS LIMITED.
6. GATE VALVES SHALL BE CHAINED AND LOCKED TOGETHER TO PREVENT TAMPERING.

ISSUED: 03-01-904 | DEPARTMENT OF PUBLIC UTILITIES STANDARD DETAIL | REVISED: 06-09-2024
DRAWN: TAH | APPROVED: XXX
TYPICAL 4", 6" AND 8" DOUBLE CHECK DETECTOR ASSEMBLY FOR FIRE SPRINKLER SERVICE (45° BENDS) — DRAWING NO. W-05

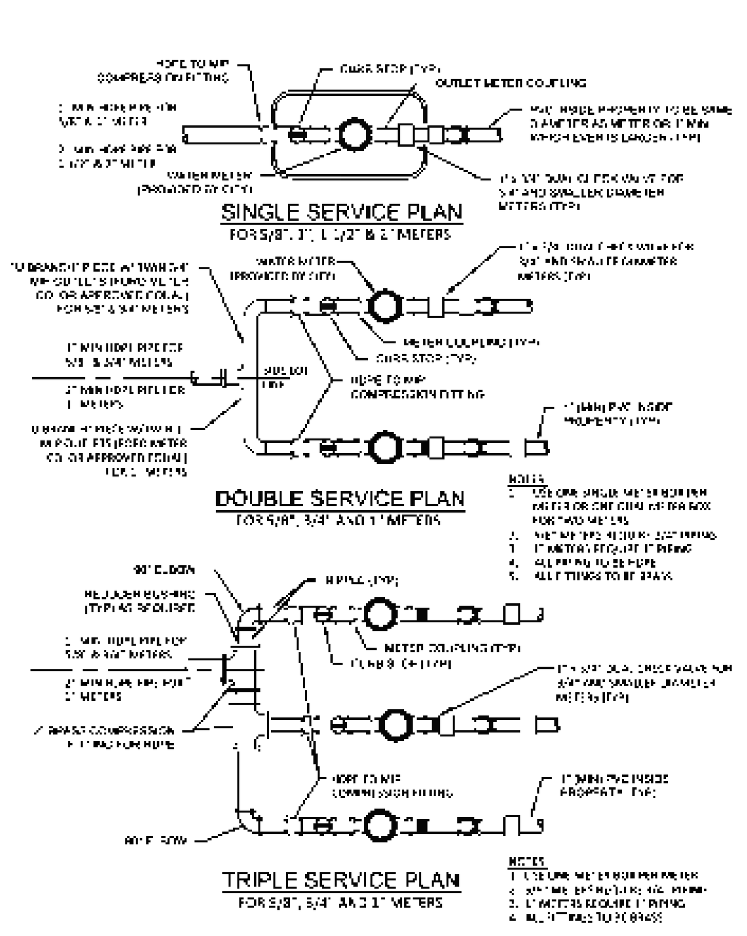

DEPARTMENT OF PUBLIC UTILITIES STANDARD DETAIL
TYPICAL 5/8", 1", 1-1/2" AND 2" METER INSTALLATION — W-06

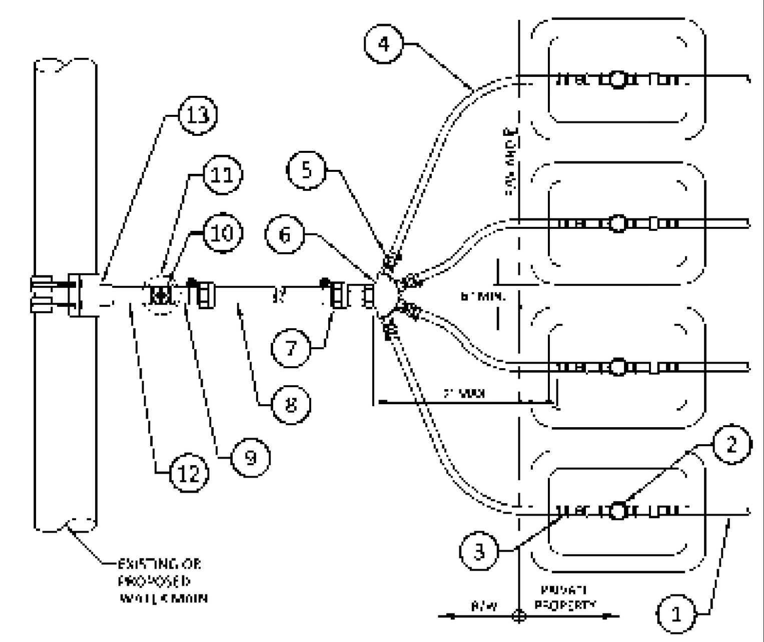

1. PROPERTY OWNER'S SERVICE PIPE
2. 5/8", 3/4" OR 1" METER INSTALLATION (REFER TO "SINGLE SERVICE PLAN" ON STANDARD DETAIL W-06) (TYP. FOR 4)
3. COUPLING W/1" COMPRESSION FOR HDPE X 3/4" MIP
4. 1" HDPE SERVICE PIPE TO METER (TYP. FOR 4)
5. COUPLING W/1" MIP X 1" COMPRESSION FOR HDPE (TYP. FOR 4)
6. MULTI-SERVICE "Y" W/SINGLE 2" FIP INLET AND (4)-1" FIP OUTLETS (MULTI SERVICE BRASS Y)
7. COUPLING WITH 2" COMPRESSION FOR HDPE X 2" MIP
8. 2" HDPE WATER SERVICE PIPE
9. COUPLING W/2" BRASS THREAD x 2" COMPRESSION FOR HDPE
10. PROP. 2" GATE VALVE W/2" OPERATING WHEEL
11. PROP. VALVE BOX W/LID AND RISER. FOR UNPAVED AREAS, INSTALL 24"x24"x8" THICK CONC. COLLAR
12. PROPOSED 2" BRASS NIPPLE
13. PROP. DOUBLE STRAP SERVICE SADDLE FOR D.I.P. OR BAND SADDLE FOR PVC
14. ALL FITTINGS TO BE BRASS.

DEPARTMENT OF PUBLIC UTILITIES STANDARD DETAIL
METER BANK INSTALLATION FOR FOUR 5/8", 3/4" AND/OR 1" METERS — W-06.1

WATER METER SERVICE NOTES:

1. SUCCESSIVE TAPS INTO THE WATER MAIN SHALL BE SPACED NOT LESS THAN 18" ON CENTER.
2. P.E. TUBING SHALL BE IN ACCORDANCE WITH THE LATEST EDITION OF AWWA STANDARD C901, "POLYETHYLENE (PE) PRESSURE PIPE AND TUBING, 1/2 IN. (13mm) THROUGH 3 IN. (76 mm), FOR WATER SERVICE".
3. MINIMUM SERVICE PIPE DIAMETER SHALL BE 1" FOR SINGLE OR DUAL 5/8" OR SINGLE 1" DIAMETER METERS.
4. MINIMUM SERVICE PIPE DIAMETER SHALL BE 2" FOR SINGLE OR DUAL 1-1/2" OR SINGLE 2" DIAMETER METERS.
5. FOR METER DIAMETERS LARGER THAN 2", THE MINIMUM SERVICE PIPE DIAMETER SHALL BE THE SAME AS THE METER DIAMETER.
6. APPROVED COPPER TUBING MAY BE USED AT THE CITY'S DISCRETION.
7. FOR NEW METER INSTALLATIONS, ALL SADDLES, VALVES, PIPING, FITTINGS, CURB STOPS, METER VALVES, METER COUPLINGS, METER VAULTS AND COVERS SHALL BE FURNISHED AND INSTALLED BY THE CONTRACTOR. THE WATER METERS WILL BE PROVIDED AND INSTALLED BY THE CITY OF HOLLYWOOD (NEW ACCOUNTS).
8. FOR METER RELOCATIONS, ALL SADDLES, VALVES, PIPING, FITTINGS, CURB STOPS, METER VALVES, METER COUPLINGS, METER VAULTS AND COVERS SHALL BE FURNISHED AND INSTALLED BY THE CONTRACTOR. THE EXISTING WATER METER TO BE RELOCATED AND INSTALLED BY CONTRACTOR.
9. FOR EXISTING METERS ABUTTING THE RIGHT OF WAY THAT ARE BEING DISCONNECTED FROM EXISTING MAINS AND RECONNECTED TO NEW MAINS, THE CONTRACTOR SHALL:
   a. CUT AND PLUG THE EXISTING SERVICE LINE AT THE MAIN AND AT THE METER, AND REMOVE THE EXISTING BALL VALVE CURB STOP.
   b. FURNISH AND INSTALL SERVICE SADDLE, CORPORATION STOP OR SERVICE VALVE AND VALVE BOX, PIPING AND FITTINGS UP TO AND INCLUDING THE BALL VALVE CURB STOP.
12. THE ELEVATION AT THE TOP OF THE METER BOX SHALL MATCH THE ELEVATION OF THE BACK OF SIDEWALK, WHENEVER PRACTICAL.
13. AS PART OF THE SERVICE INSTALLATION, THE CONTRACTOR SHALL RESTORE THE RIGHT-OF-WAY TO MATCH EXISTING CONDITIONS, INCLUDING ROADWAY PAVEMENT, PAVEMENT MARKINGS AND RPMs, CONCRETE CURBS, SIDEWALKS, RAMPS (INCLUDING DETECTABLE WARNING SURFACES), SODDING, AND ALL OTHER IMPROVEMENTS REMOVED OR DAMAGED DURING THE SERVICE INSTALLATION.
14. FOR UNPAVED AREAS, THE MINIMUM GROUND COVER ACCEPTED BY THE CITY IS SODDING.

DEPARTMENT OF PUBLIC UTILITIES STANDARD DETAIL
WATER METER SERVICE NOTES FOR 5/8" THROUGH 2" METERS — W-07

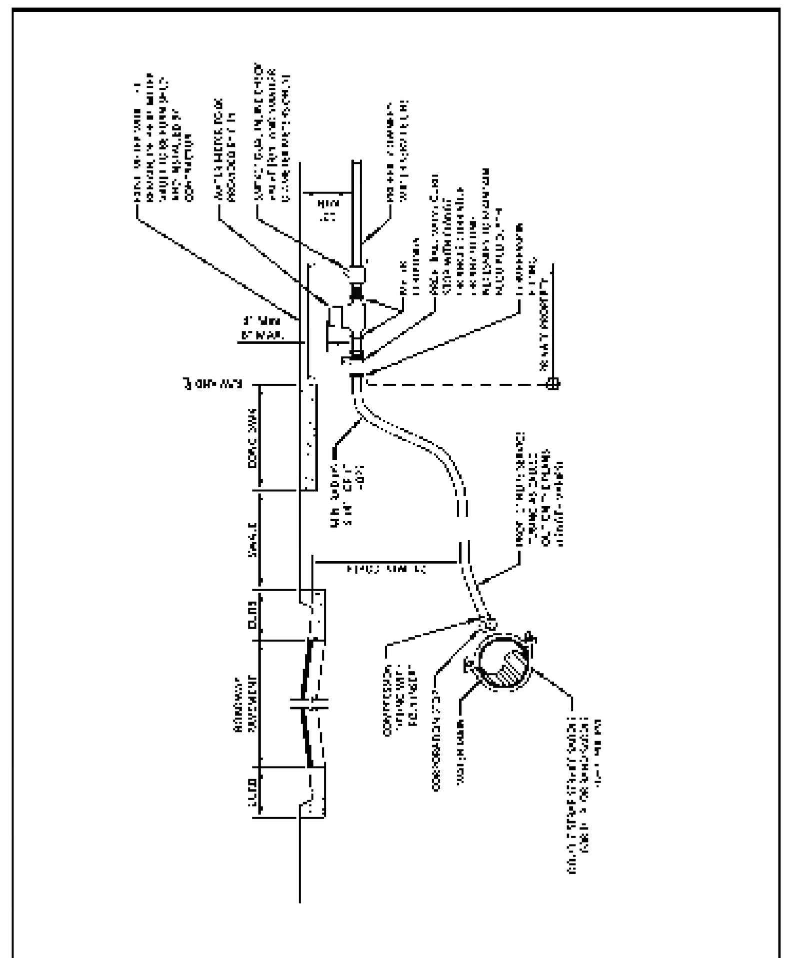

DEPARTMENT OF PUBLIC UTILITIES STANDARD DETAIL
TYPICAL 1" HDPE WATER SERVICE FOR SINGLE/DUAL 5/8" TO 1" METERS — W-08

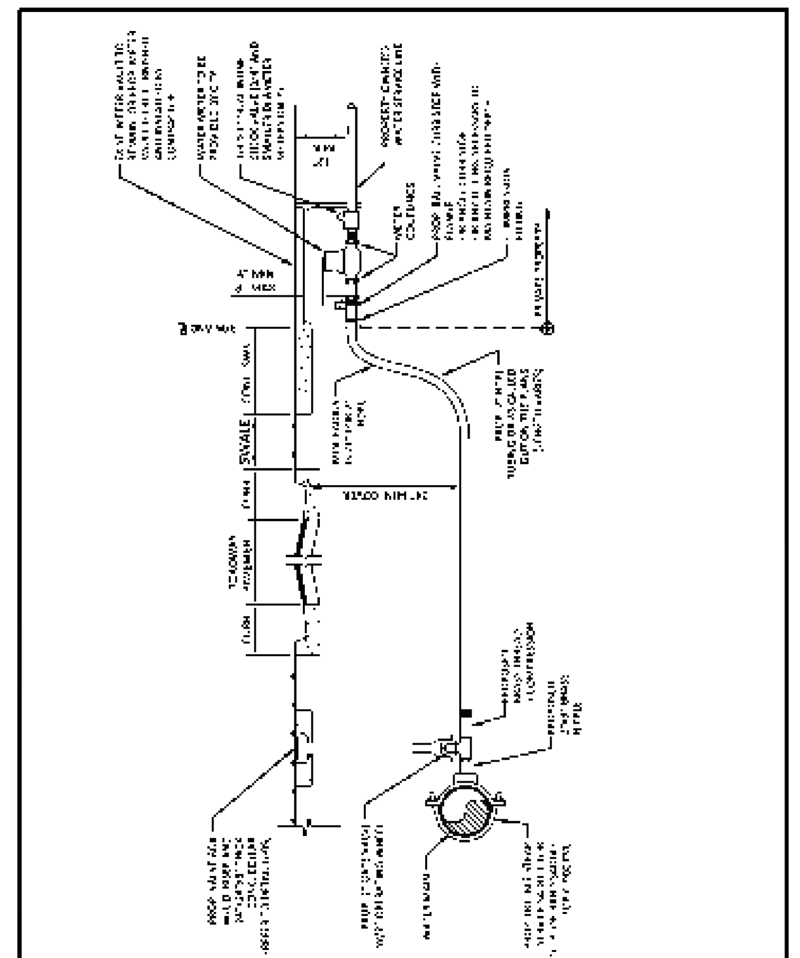

DEPARTMENT OF PUBLIC UTILITIES STANDARD DETAIL
TYPICAL 2-INCH HDPE WATER SERVICE FOR SINGLE/DUAL 5/8" TO 1" METERS, AND ANY SINGLE 1-1/2" TO 2" METERS — W-09

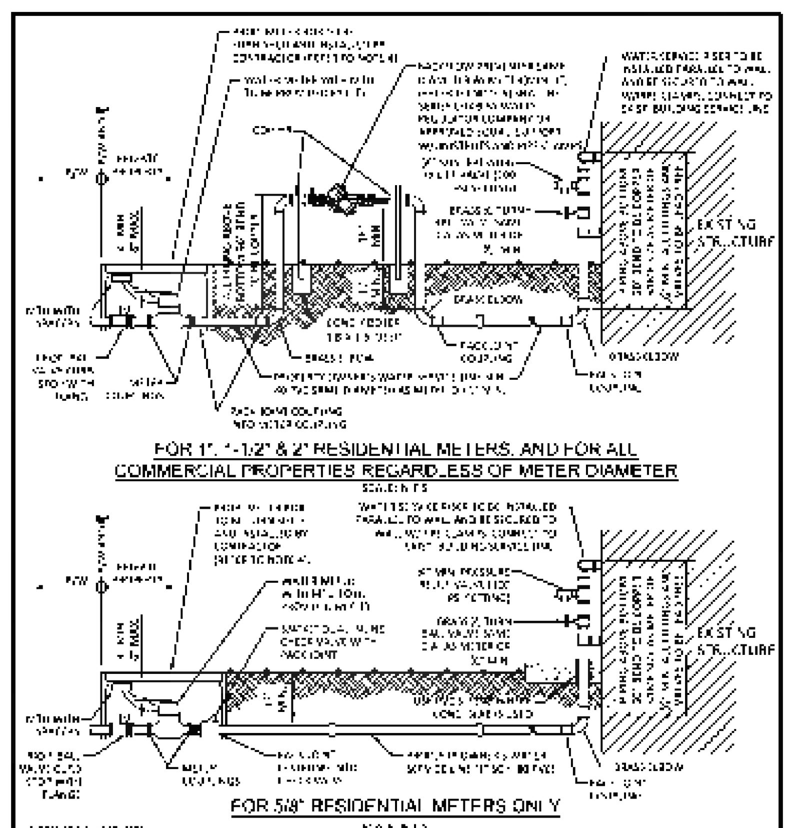

DEPARTMENT OF PUBLIC UTILITIES STANDARD DETAIL
TYPICAL WATER SERVICE FROM METER TO STRUCTURE FOR 5/8" THROUGH 2" METERS — W-10

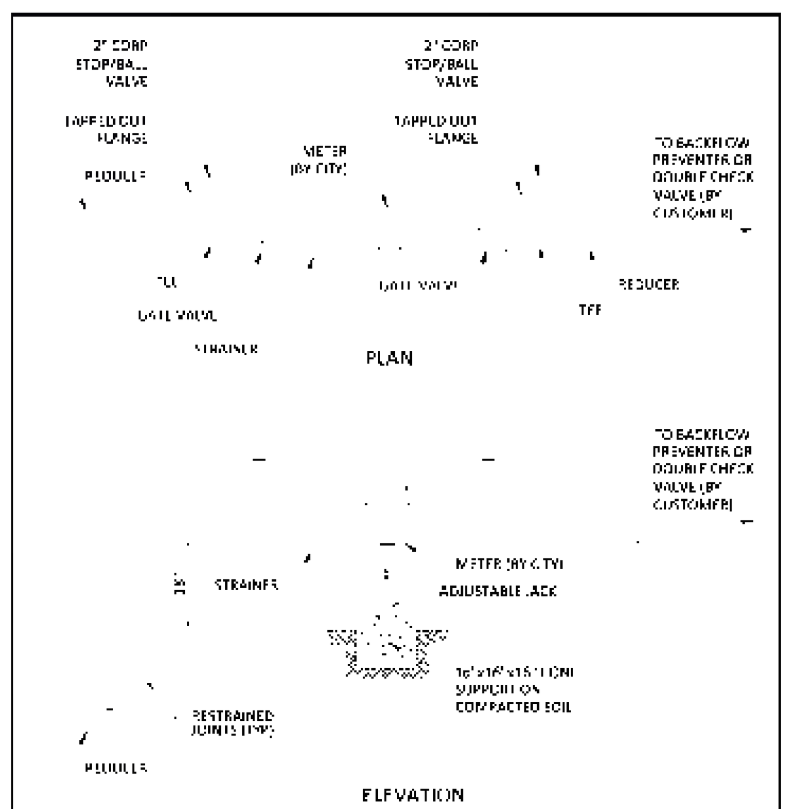

NOTES:
1. THE WATER METER AND STRAINER IS PROVIDED BY THE CITY OF HOLLYWOOD.
2. THE CITY'S RESPONSIBILITY ENDS AT THE REDUCER PRECEDING THE BACKFLOW PREVENTER.
3. TAPPED OUT FLANGE SHOULD MATCH SIZE OF TEE AND STANDARD 2" CORP STOP OR BALL VALVE.

ISSUED: 03-01-904 | DEPARTMENT OF PUBLIC UTILITIES STANDARD DETAIL | REVISED: 06-09-2024
DRAWN: TAH | APPROVED: XXX
TYPICAL METER 3" DIAMETER AND LARGER — DRAWING NO. W-11

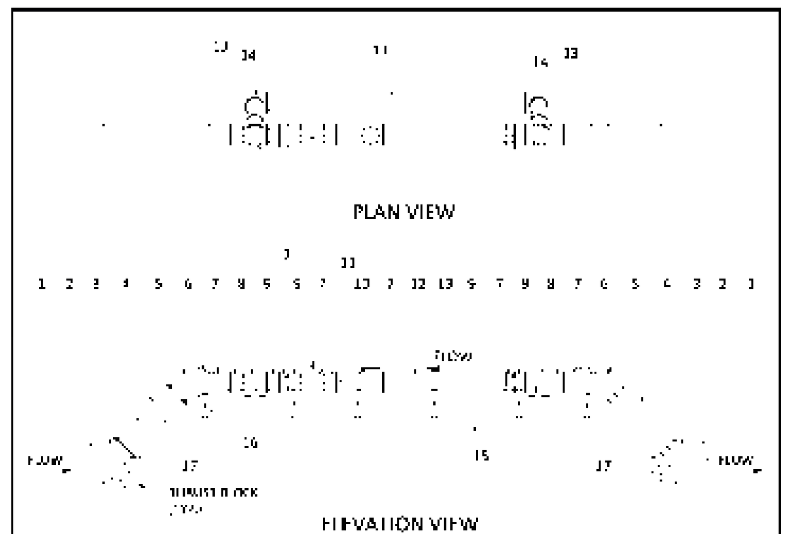

NOTES:
1. FIELD ADJUST AND CUT ITEM 3 TO THE PROPER LENGTH.
2. ALL PIPING SHALL BE D.I.P. CL 50/52 AS APPLICABLE TO MINIMUM STANDARDS.
3. USE 90° BENDS WHEN WORKING AREA IS LIMITED.
4. ADJUSTABLE PIPE SADDLE SUPPORTS SHALL BE SIZED TO FIT CURVATURE OF PIPE, WITH GALVANIZED STEEL PIPE AND FLOOR FLANGE. ATTACH FLOOR FLANGE TO CONCRETE SLAB WITH GALVANIZED EXPANSION BOLTS.

ISSUED: 03-01-904 | DEPARTMENT OF PUBLIC UTILITIES STANDARD DETAIL | REVISED: 06-09-2024
DRAWN: TAH | APPROVED: XXX
12" CLASS II TURBINE METER ASSEMBLY FOR 20" WATER MAIN — DRAWING NO. W-12

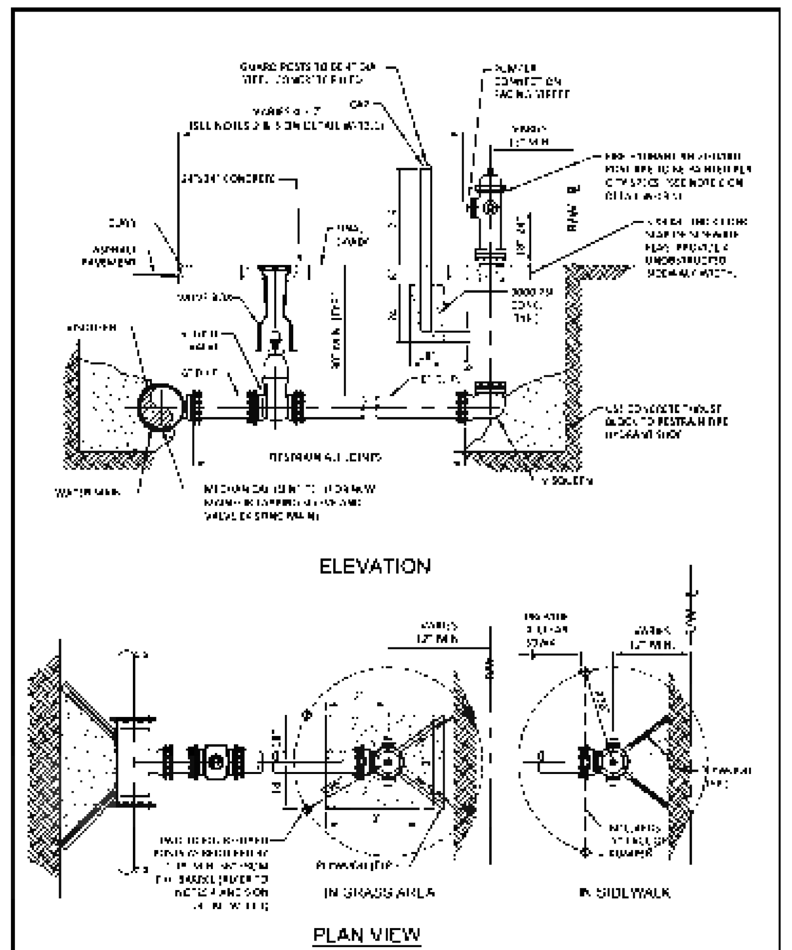

DEPARTMENT OF PUBLIC UTILITIES STANDARD DETAIL
TYPICAL FIRE HYDRANT INSTALLATION — W-13

NOTES

1. IN ALL CASES, PROVIDE 4' UNOBSTRUCTED SIDEWALK CLEAR OF THE FIRE HYDRANT AND BOLLARDS.
2. FIRE HYDRANTS SHALL BE LOCATED BETWEEN 4' AND 7' FROM THE FACE OF CURB.
3. FIRE HYDRANTS SHALL NOT BE LOCATED WITHIN A RADIUS OR WITHIN FOOT CLEAR DRIVING ZONE.
4. GUARD POSTS SHALL BE INSTALLED AS REQUIRED FOR SAFETY OR AS APPROVED BY THE DEPT. OF PUBLIC UTILITIES. IN SIDEWALK, LOCATE GUARD POSTS AT THE FACE OF THE PUMPER AND 2'-6" LEFT/RIGHT OF ℄ OF THE FIRE HYDRANT. EXTRA POSTS MAY BE REQUIRED IN INDUSTRIAL AND CONGESTED TRAFFIC AREAS. (4 POSTS MAX.)
5. FIRE HYDRANT CONCRETE SLAB AND CONCRETE GUARD POST FOOTINGS SHALL BE DIFFERENT POURS.
6. THE FIRE HYDRANT BONNET, OPERATING NUT, HOLD-DOWN NUT, PUMPER CAP AND HOSE CAPS SHALL BE PAINTED GREEN, AND THE HYDRANT UPPER BARREL SHALL BE PAINTED SILVER IN ACCORDANCE WITH CITY SPECIFICATIONS.

DEPARTMENT OF PUBLIC UTILITIES STANDARD DETAIL
TYPICAL FIRE HYDRANT NOTES — DRAWING NO. W-13.1

BTE REF DATE: 6-18-2026

#	DATE	REVISIONS

STEPHEN F. BOTEK — LICENSE No. 55335 — STATE OF FLORIDA — PROFESSIONAL ENGINEER
June 18, 2026

THIS DOCUMENT HAS BEEN DIGITALLY SIGNED AND SEALED BY STEPHEN F. BOTEK, P.E. ON THE DATE ADJACENT TO THE SEAL.

PRINTED COPIES OF THIS DOCUMENT ARE NOT CONSIDERED SIGNED AND SEALED AND THE SIGNATURE MUST BE VERIFIED ON ANY ELECTRONIC COPIES.

WATER AND SANITARY SEWER DETAILS

EMERALD HILLS
Site E - Clubhouse
Hollywood, Florida

Botek Thurlow Engineering, Inc.
3409 NW 9th Avenue, Suite 1102, Ft. Lauderdale, FL 33309
www.botekthurlow-eng.com p: 954-568-0888 f: 954-568-0757

BTE PROJECT #: 22-0401

PROJECT DATE: 6-5-2024

SHEET #: CE-WS-8

WATER MAIN TESTING AND DISINFECTION NOTES:

1. NO CONNECTIONS TO THE EXISTING LINES SHALL BE MADE UNTIL THE PRESSURE AND BACTERIOLOGICAL TESTS HAVE BEEN PERFORMED ON THE PROPOSED WATER MAINS AND THE SYSTEM HAS BEEN APPROVED BY THE CITY OF HOLLYWOOD AND THE BROWARD COUNTY HEALTH DEPARTMENT.
2. THE PRESSURE TEST SHALL BE PERFORMED FOR 2 HOURS AT A CONSTANT PRESSURE OF 150 PSI AND IN ACCORDANCE WITH RULE 62-555.330 (FAC) C600 AWWA LATEST REVISION, EXCEPT AS OTHERWISE SPECIFIED HEREIN AND IN SPECIFICATION SECTION 15995, "PIPELINE TESTING AND DISINFECTION". PRESSURE TEST SHALL BE WITNESSED BY THE CITY OF HOLLYWOOD. THE ALLOWABLE LEAKAGE SHALL BE LESS THAN THE NUMBER OF GALLONS PER HOUR AS DETERMINED BY THE FORMULA:

$$L = \frac{S \times D \times P}{148{,}000}$$

L = THE ALLOWABLE LEAKAGE IN GALLONS PER HOUR
S = THE LENGTH OF THE PIPE BEING TESTED
D = THE NOMINAL DIAMETER OF THE PIPE BEING TESTED
P = THE AVERAGE TEST PRESSURE IN POUNDS PER SQUARE INCH

3. THE COMPLETE LENGTH OF THE PROPOSED WATER MAIN SHALL BE TESTED IN LENGTHS NOT TO EXCEED 2,000 FEET PER TEST.
4. PROPOSED WATER MAINS SHALL BE DISINFECTED IN ACCORDANCE WITH THE LATEST EDITION OF ANSI/AWWA STANDARD C651 AND BACTERIOLOGICAL TESTED FOR TWO CONSECUTIVE DAYS IN ACCORDANCE WITH SPECIFICATION SECTION 15995, "PIPELINE TESTING AND DISINFECTION".
5. BACTERIOLOGICAL TESTS SHALL BE REQUESTED AND PAID FOR BY THE CONTRACTOR.
6. THE CONTRACTOR SHALL DIRECTLY HIRE A TESTING LABORATORY CERTIFIED BY THE FLORIDA DEPARTMENT OF HEALTH IN ORDER TO COLLECT AND TEST WATER SAMPLES FROM THE WATER DISTRIBUTION SYSTEM TO BE PLACED INTO SERVICE. SAMPLE COLLECTION AND BACTERIOLOGICAL ANALYSES SHALL BE PERFORMED IN ACCORDANCE WITH RULES 62-555.315(6), 62-555.340 AND 62-555.330 (FAC), AS WELL AS ALL REQUIREMENTS OF THE BROWARD COUNTY HEALTH DEPARTMENT PERMIT.
7. THE WATER DISTRIBUTION SYSTEM SHALL NOT BE CONSIDERED COMPLETE AND READY FOR FINAL INSPECTION UNTIL SUCCESSFUL TEST RESULTS ARE OBTAINED FOR ALL TESTS DESCRIBED ABOVE.

DEPARTMENT OF PUBLIC UTILITIES STANDARD DETAIL — DRAWN: TAH
WATER MAIN TESTING AND DISINFECTION NOTES — DRAWING NO. W-14

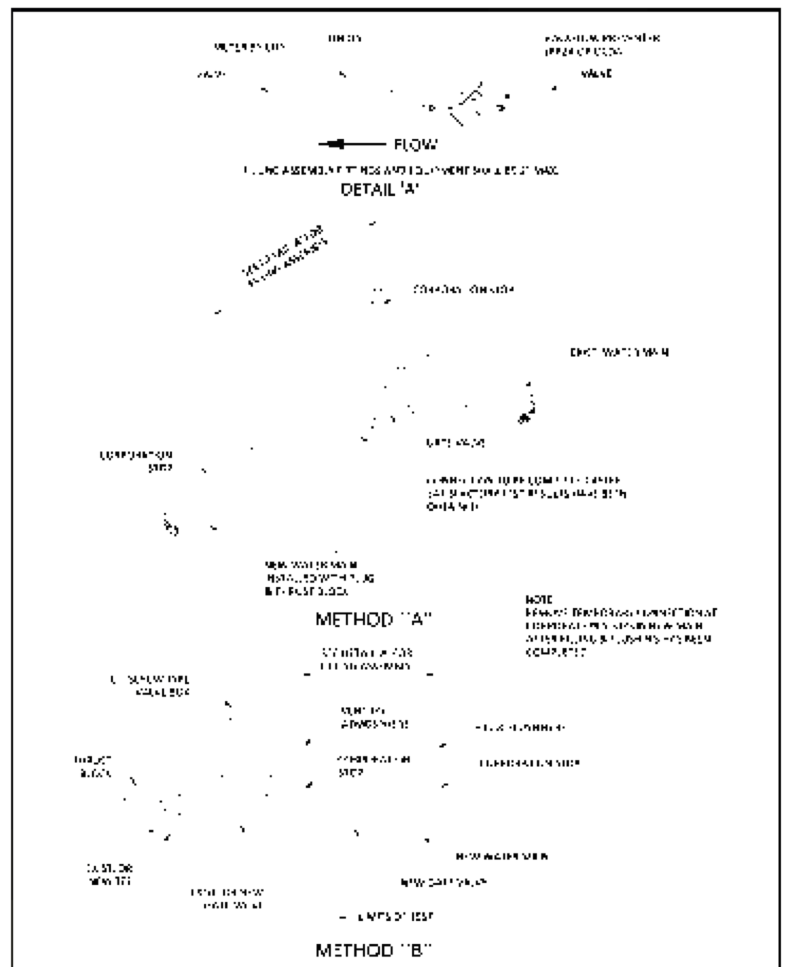

DEPARTMENT OF PUBLIC UTILITIES STANDARD DETAIL — DRAWN: TAH
FILLING AND FLUSHING DETAILS — DRAWING NO. W-15

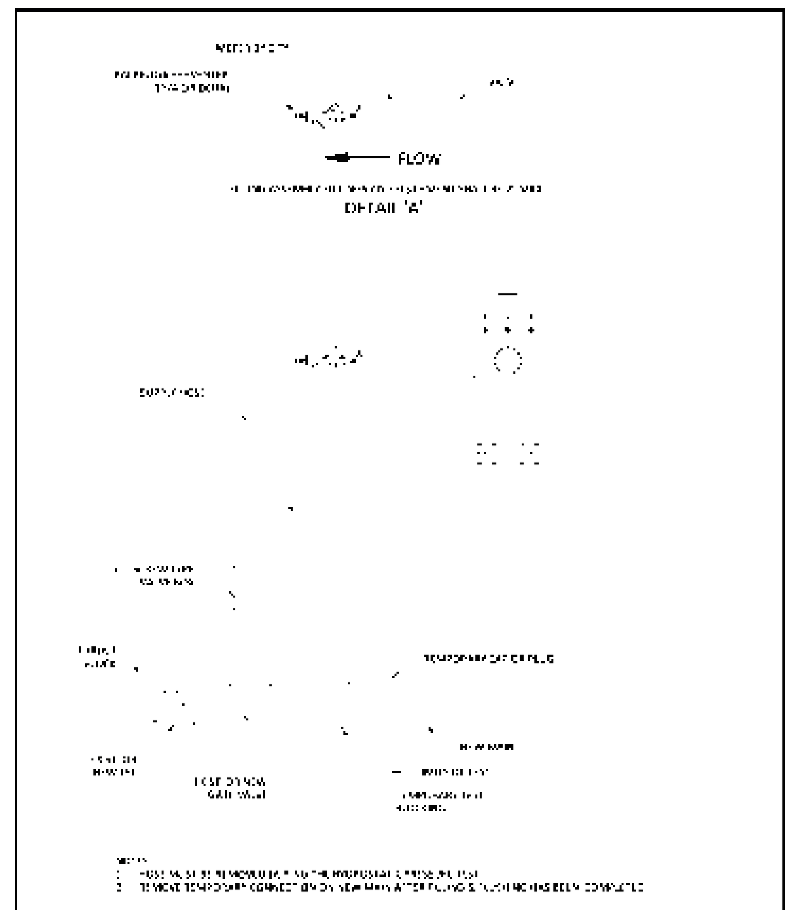

DEPARTMENT OF PUBLIC UTILITIES STANDARD DETAIL — DRAWN: TAH
CROSS CONNECTION FILLING AND FLUSHING DETAILS — DRAWING NO. W-15.1

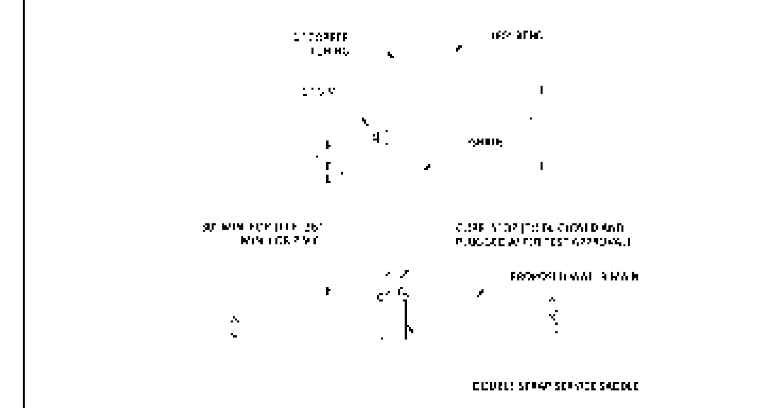

NOTES:
SAMPLING POINT SHALL NOT BE REMOVED UNTIL APPROVAL IS OBTAINED FROM BROWARD COUNTY HEALTH DEPARTMENT.

DEPARTMENT OF PUBLIC UTILITIES STANDARD DETAIL — DRAWN: TAH
SAMPLING POINT DETAIL — DRAWING NO. W-16

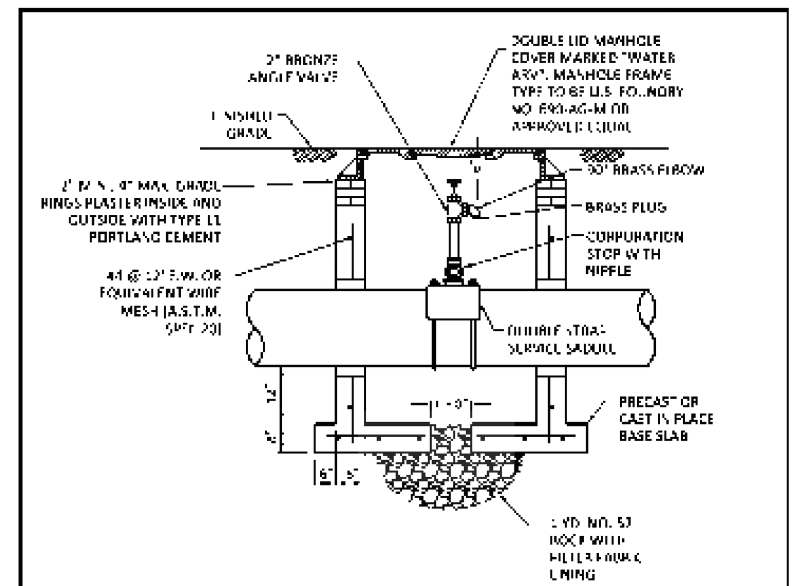

NOTES:
1. ARV ASSEMBLY SHALL BE 1" WHEN INSTALLED ON PIPE 12" IN DIAMETER OR SMALLER. FOR PIPE LARGER THAN 12" IN DIAMETER, USE 2" ARV ASSEMBLY.
2. PRECAST CONCRETE TYPE 4,000 PSI.
3. ALL OPENINGS SHALL BE SEALED WITH WATERPROOF, NON-SHRINKING GROUT.
4. LIFT HOLES ARE PERMITTED.
5. ALL PIPE HOLES SHALL BE PRECAST OR CORE DRILLED.
6. MANHOLE FABRICATION SHALL BE IN ACCORDANCE WITH A.S.T.M. C 478 LATEST STANDARD.
7. PAINT INSIDE & OUTSIDE WITH 2 COATS OF AN APPROVED PROTECTIVE COATING (MIN. 10 MIL. D.F.T. PER COAT).
8. CONCRETE COLLAR REQUIRED WHEN MANHOLE IS OUTSIDE PAVEMENT.
9. AIR RELEASE VALVE SHALL BE TYPE AND SIZE APPROPRIATE FOR SERVICE INTENDED.
10. CONSTRUCTION JOINT AT BASE IS PERMITTED.
11. THREADED AREAS OF CORPORATION STOP SHALL BE SPIRAL WRAPPED WITH TWO LAYERS OF TEFLON TAPE.
12. IF MANHOLE IS LARGER THAN 4' DIAMETER USE REDUCING GRADE RING OR CONE SECTION.
13. ALL PIPING SHALL BE COPPER.

DEPARTMENT OF PUBLIC UTILITIES STANDARD DETAIL
MANUAL AIR RELEASE VALVE ASSEMBLY — W-17

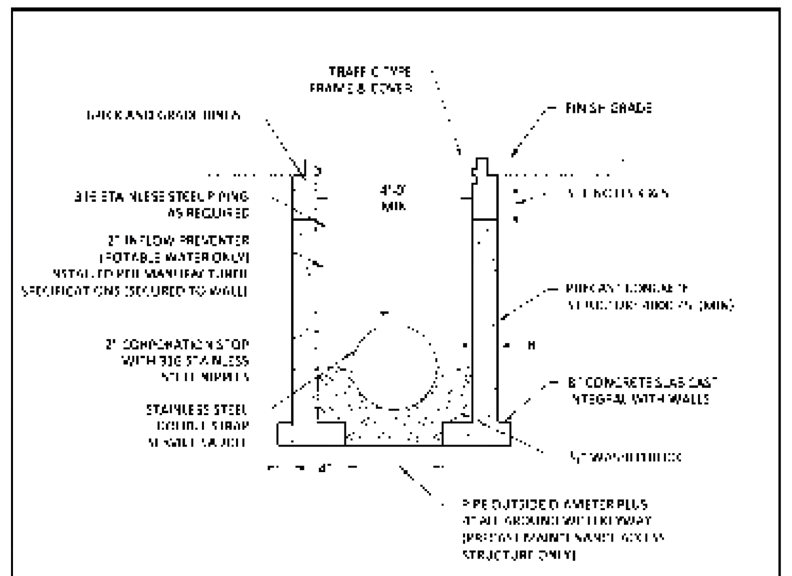

NOTES
1. LIFT HOLES ARE TO BE SEALED WITH 3/4" THICK MORTAR INSIDE AND OUTSIDE AFTER INSTALLATION.
2. MAINTENANCE ACCESS STRUCTURE WALLS TO BE COATED INSIDE AND OUTSIDE WITH 16 MIL THICKNESS COAL TAR EPOXY.
3. ALL OPENINGS SHALL BE SEALED WITH A WATERPROOF, EXPANDING GROUT. ACTUAL LOCATION AND MAINTENANCE ACCESS STRUCTURE FRAME ELEVATION SHALL BE DETERMINED BY ENGINEER BASED ON AS BUILT SURVEY DATA.
4. THE CHIMNEY AREA SHALL BE MINIMUM OF 4" AND A MAXIMUM OF 12" IN HEIGHT. A MINIMUM OF 3 COURSES AND MAXIMUM OF 4 COURSES OF BRICK SHALL BE INSTALLED.
5. GRADE RINGS ARE AN ACCEPTABLE ALTERNATIVE TO BRICK. A MINIMUM OF 2 GRADE RINGS SHALL BE INSTALLED, SET IN TWO STRIPS OF SEALENT/ADHESIVE COMPOUND ON EACH SEALING FACE.
6. SET MAINTENANCE ACCESS STRUCTURE FRAME ON A MIX OF [illegible] AND CEMENT AND [illegible] OVER FRAME.

DEPARTMENT OF PUBLIC UTILITIES STANDARD DETAIL — DRAWN: TAH
AIR RELEASE VALVE WITH MAINTENANCE ACCESS STRUCTURE — DRAWING NO. W-18

SEWER NOTES:

1. THE MINIMUM DEPTH OF COVER OVER D.I.P. SANITARY SEWER GRAVITY OR FORCE MAINS IS 30". THE MINIMUM DEPTH OF COVER OVER PVC SANITARY SEWER OR FORCE MAINS IS 36".
2. ALL CONNECTIONS TO EXISTING MAINS SHALL BE THE RESPONSIBILITY OF THE CONTRACTOR.
3. LEAKAGE TESTS AND ALIGNMENT (LAMPING) TESTS SHALL BE PERFORMED ON ALL NEW SEWER LINES UP TO THE CONNECTION POINT WITH THE EXISTING SEWER SYSTEM. THESE TESTS SHALL BE REQUESTED AND PAID FOR BY THE CONTRACTOR.
4. LAMPING TESTS SHALL BE PERFORMED ON GRAVITY SEWERS FROM MANHOLE TO MANHOLE UP TO AND INCLUDING THE POINT OF CONNECTION TO THE EXISTING SEWER SYSTEM.
5. LEAKAGE TESTS SHALL BE PERFORMED ON ALL SEGMENTS OF A GRAVITY SEWER SYSTEM, INCLUDING SERVICE LATERALS AND MANHOLES, FOR A CONTINUOUS PERIOD OF NOT LESS THAN 2 HOURS. AT THE END OF THE TEST, THE TOTAL MEASURED LEAKAGE SHALL NOT EXCEED 100 GALLONS PER INCH OF PIPE DIAMETER PER MILE PER DAY FOR ANY SECTION OF THE SYSTEM, WITH ZERO ALLOWABLE LEAKAGE FOR LATERALS AND MANHOLES. AN EXFILTRATION OR INFILTRATION TEST SHALL BE PERFORMED WITH A MINIMUM POSITIVE HEAD OF 2 FEET ON THE SECTION BEING TESTED.
6. FORCE MAINS SHALL BE PRESSURE-TESTED IN ACCORDANCE WITH RULE 62-555.330 (FAC). THE PRESSURE TEST SHALL CONSIST OF HOLDING A TEST PRESSURE OF 150 PSI ON THE PIPELINE FOR A CONTINUOUS PERIOD OF 2 HOURS. THE MAXIMUM ALLOWABLE LEAKAGE SHALL BE DETERMINED BY THE FOLLOWING FORMULA:

$$L = \frac{S \times D \times \sqrt{P}}{148{,}000}$$

WHERE:
L = ALLOWABLE LEAKAGE FOR SYSTEM IN GALLONS PER HOUR
D = PIPE DIAMETER IN INCHES
S = LENGTH OF LINES IN LINEAL FEET
P = AVERAGE TEST PRESSURE IN PSI

7. CONTRACTOR SHALL BE RESPONSIBLE FOR IDENTIFYING CONFLICTS WITH FORCE MAINS PLACED AT MINIMUM COVER. IN CASE OF CONFLICT, FORCE MAIN SHALL BE LOWERED TO PASS UNDER CONFLICTS WITH 30" MINIMUM SEPARATION FROM WATER MAINS AND 6" MINIMUM SEPARATION FROM OTHER UTILITIES. NO ADDITIONAL PAYMENT SHALL BE DUE TO CONTRACTOR FOR LOWERING THE MAIN OR THE ADDITIONAL FITTINGS USED THEREFOR.
8. WHENEVER IT IS NECESSARY, IN THE INTEREST OF SAFETY, TO BRACE THE SIDES OF A TRENCH, THE CONTRACTOR SHALL FURNISH, PUT IN PLACE AND MAINTAIN SUCH SHEETING OR BRACING AS MAY BE NECESSARY TO SUPPORT THE SIDES OF THE EXCAVATION TO ENSURE PERSONNEL SAFETY, AND TO PREVENT MOVEMENT WHICH CAN IN ANY WAY DAMAGE THE WORK OR ENDANGER ADJACENT STRUCTURES. THE CONTRACTOR SHALL BE SOLELY RESPONSIBLE FOR THE SEQUENCE, METHODS AND MEANS OF CONSTRUCTION, AND FOR THE IMPLEMENTATION OF ALL OSHA AND OTHER SAFETY REQUIREMENTS.

DEPARTMENT OF PUBLIC UTILITIES STANDARD DETAIL
SANITARY SEWER MAIN CONSTRUCTION NOTES — S-01

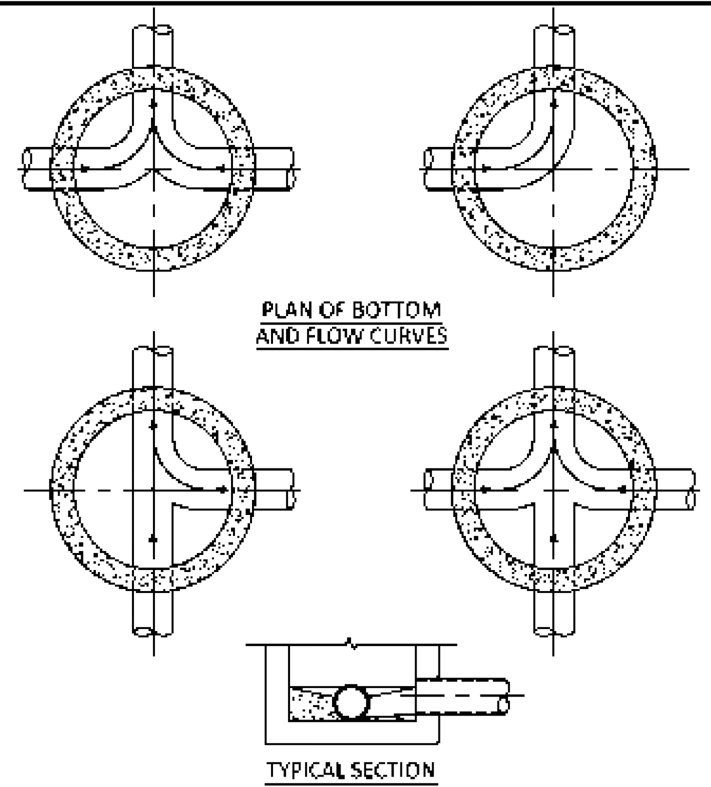

NOTES:
1. INVERT CHANNELS TO BE CONSTRUCTED FOR SMOOTH FLOW WITH NO OBSTRUCTIONS.
2. SPILLWAYS SHALL BE CONSTRUCTED BETWEEN PIPES WITH DIFFERENT INVERT ELEVATIONS PROVIDING SMOOTH FLOWS.
3. CHANNELS FOR FUTURE CONNECTIONS (STUBS) SHALL BE CONSTRUCTED FILLED WITH SAND & COVERED WITH 1" OF MORTAR.
4. WHEN FLOW LINE DEFLECTS MORE THAN 45°, A DROP OF 0.10' IS REQUIRED.

DEPARTMENT OF PUBLIC UTILITIES STANDARD DETAIL
MANHOLE FLOW PATTERNS — S-02

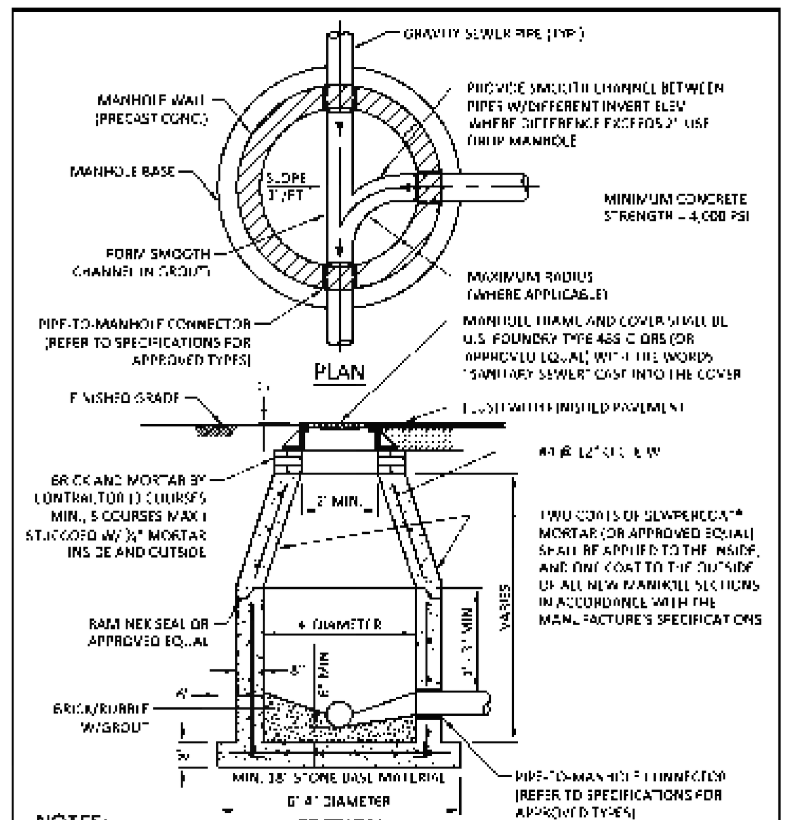

NOTES:
1. SHOP DRAWINGS SHOWING ALL DIMENSIONS, INCLUDING CONCRETE REINFORCEMENT AND BUOYANCY, SHALL BE SUBMITTED TO THE CITY PRIOR TO INSTALLATION.
2. THE BOTTOM SLAB SHALL BE CAST MONOLITHICALLY WITH THE LOWER WALL SECTION TO A MINIMUM OF 3" ABOVE SLAB BASE.
3. NO CONSTRUCTION JOINTS ARE ALLOWED BELOW ELEVATION +2.00 NAVD. ABOVE ELEVATION +2.00 NAVD CONSTRUCTION JOINTS ARE ALLOWED, IF ADEQUATE JOINTS WITH KEY-WAYS AND WATER STOPS ARE PROVIDED. SUBMIT SHOP DRAWINGS OF JOINT DETAILS TO THE ENGINEER FOR APPROVAL.

DEPARTMENT OF PUBLIC UTILITIES STANDARD DETAIL
STANDARD PRECAST MANHOLE — S-03

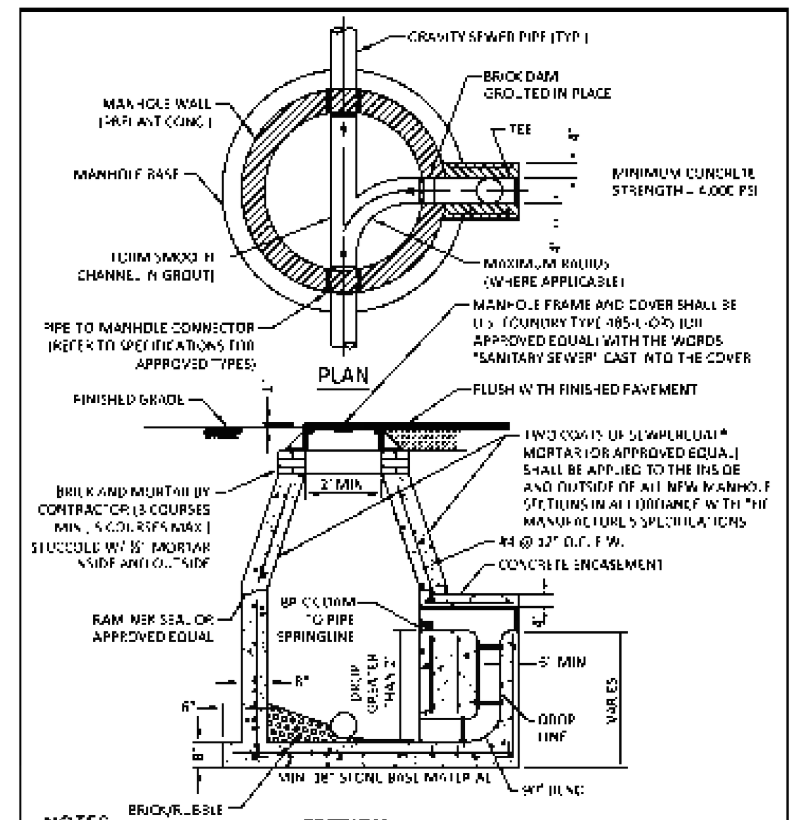

NOTES:
1. SHOP DRAWINGS SHOWING ALL DIMENSIONS, INCLUDING CONCRETE REINFORCEMENT AND BUOYANCY, SHALL BE SUBMITTED TO THE CITY PRIOR TO INSTALLATION.
2. THE BOTTOM SLAB SHALL BE CAST MONOLITHICALLY WITH THE LOWER WALL SECTION TO A MINIMUM OF 3" ABOVE SLAB BASE.
3. NO CONSTRUCTION JOINTS ARE ALLOWED BELOW ELEVATION +2.00 NAVD. ABOVE ELEVATION +2.00 NAVD CONSTRUCTION JOINTS ARE ALLOWED, IF ADEQUATE JOINTS WITH KEY-WAYS AND WATER STOPS ARE PROVIDED. SUBMIT SHOP DRAWINGS OF JOINT DETAILS TO THE ENGINEER FOR APPROVAL.

DEPARTMENT OF PUBLIC UTILITIES STANDARD DETAIL
DROP MANHOLE — S-04

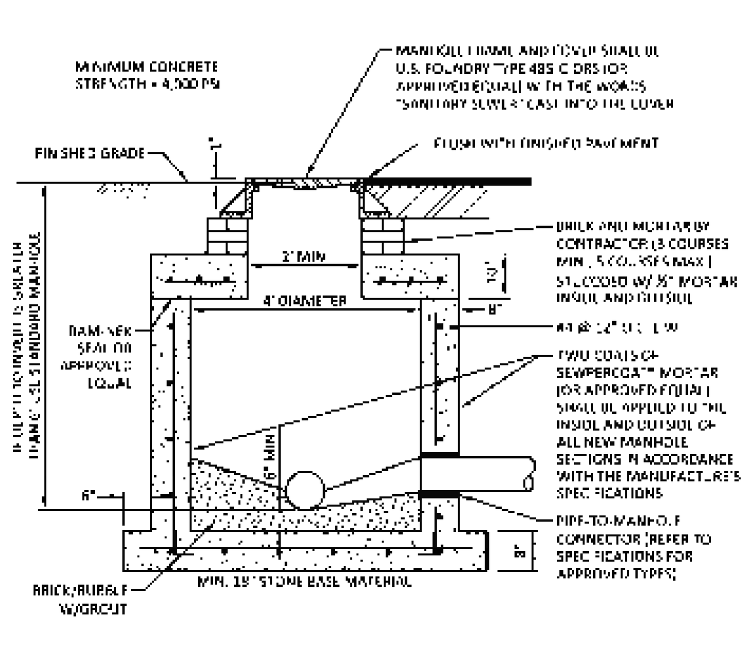

NOTES:
1. SHOP DRAWINGS SHOWING ALL DIMENSIONS, INCLUDING CONCRETE REINFORCEMENT AND BUOYANCY, SHALL BE SUBMITTED TO THE CITY PRIOR TO INSTALLATION.
2. THE BOTTOM SLAB SHALL BE CAST MONOLITHICALLY WITH THE LOWER WALL SECTION TO A MINIMUM OF 3" ABOVE SLAB BASE.
3. NO CONSTRUCTION JOINTS ARE ALLOWED BELOW ELEVATION +2.00 NAVD. ABOVE ELEVATION +2.00 NAVD CONSTRUCTION JOINTS ARE ALLOWED, IF ADEQUATE JOINTS WITH KEY-WAYS AND WATER STOPS ARE PROVIDED. SUBMIT SHOP DRAWINGS OF JOINT DETAILS TO THE ENGINEER FOR APPROVAL.

DEPARTMENT OF PUBLIC UTILITIES STANDARD DETAIL
SHALLOW MANHOLE — S-05

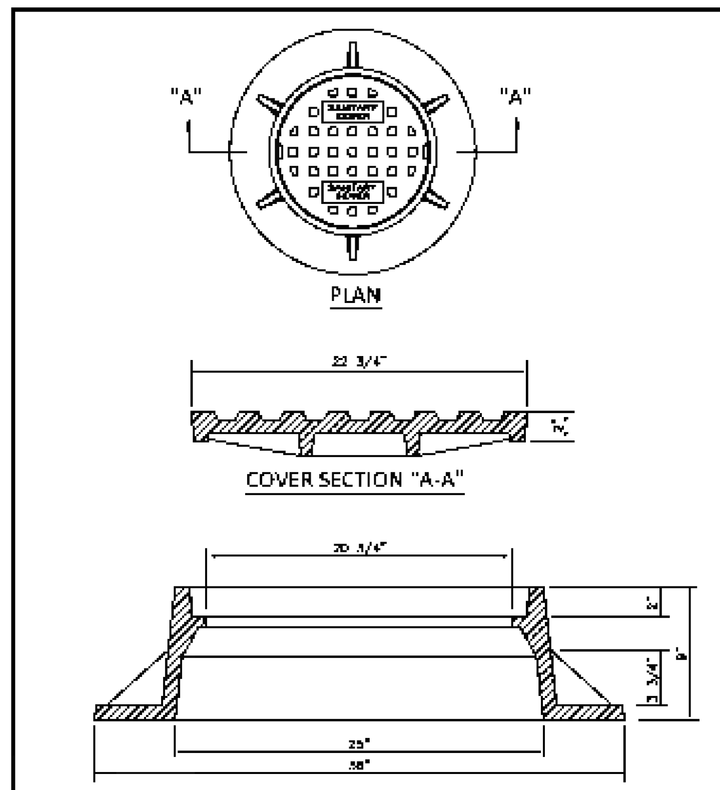

NOTES:
1. LETTERS ON COVER TO BE 3/8" HIGH, 1/16" TO 5/16" THICK AND FLUSH WITH TOP OF COVER.
2. ALL BEARING SURFACES TO BE MACHINED.
3. MINIMUM WEIGHTS: COVER - 160 LBS., TOTAL - 400 LBS.
4. MANHOLE FRAME AND COVER SHALL BE U.S. FOUNDRY 485-C-ORS WITH THE WORDS "SANITARY SEWER" CAST INTO THE COVER.

DEPARTMENT OF PUBLIC UTILITIES STANDARD DETAIL
MANHOLE FRAME AND COVER — S-06

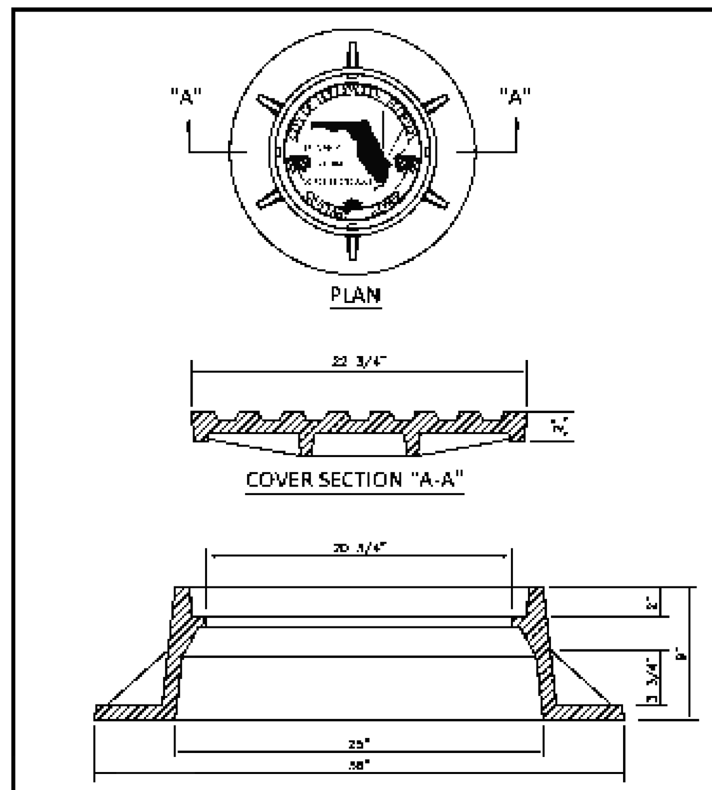

NOTES:
1. LETTERS ON COVER TO BE 3/8" HIGH, 1/16" TO 5/16" THICK AND FLUSH WITH TOP OF COVER.
2. ALL BEARING SURFACES TO BE MACHINED.
3. MINIMUM WEIGHTS: COVER - 160 LBS., TOTAL - 400 LBS.
4. MANHOLE FRAME AND COVER SHALL BE U.S. FOUNDRY 485-C-ORS TYPE EL WITH THE WORDS "SANITARY SEWER" CAST INTO THE COVER.

DEPARTMENT OF PUBLIC UTILITIES STANDARD DETAIL
MANHOLE FRAME AND COVER CITY OF HOLLYWOOD — S-06.1

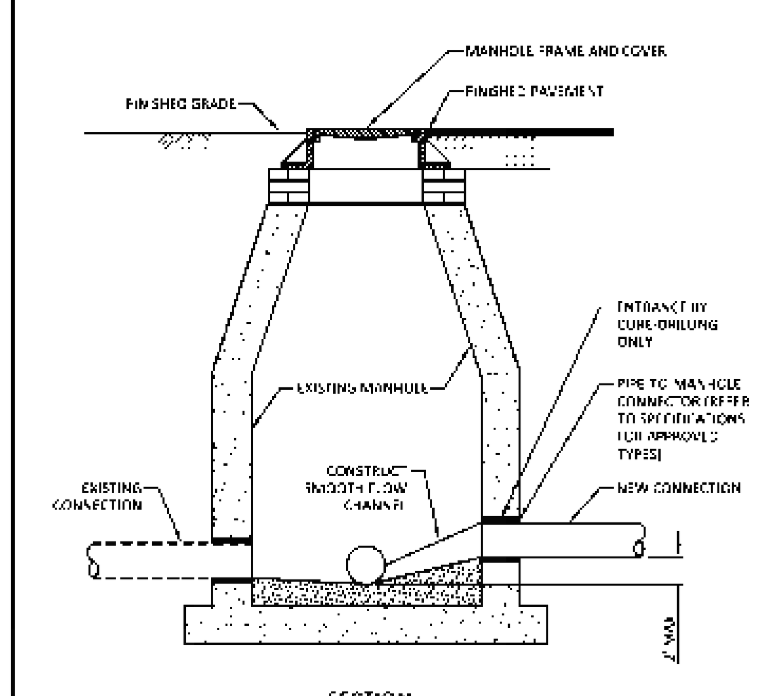

DEPARTMENT OF PUBLIC UTILITIES STANDARD DETAIL
NEW CONNECTION TO EXISTING MANHOLE — S-07

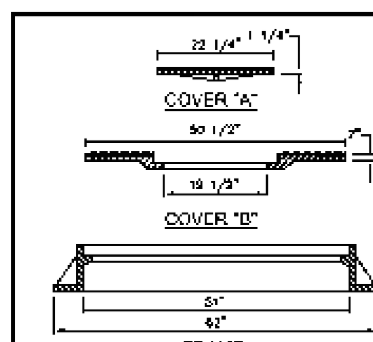

FRAME AND COVER NOTES:
1. AIR RELEASE VALVE MANHOLE COVERS AND FRAMES SHALL BE U.S. FOUNDRY TYPE 134 RING WITH AGM COVER, OR APPROVED EQUAL.
2. COVER "A" SHALL HAVE TWO ADJUSTABLE CAMLOCKS FOR SECURING IT TO COVER "B", AND FOUR 1" DIAMETER VENT HOLES TO PREVENT UPLIFT DURING SUDDEN BURSTS OF AIR.
3. THE COVERS SHALL BE CAST LABELED "AIR RELEASE".
4. PROVIDE H-20 TRAFFIC BEARING FRAME AND COVER WITHIN TRAFFIC LANES OR SWALES ADJACENT TO ROADWAY.
5. ALL BEARING SURFACES TO BE MACHINED.
6. MINIMUM WEIGHT 1840 LBS.
7. PICK HOLE COVERS "A" & "B".

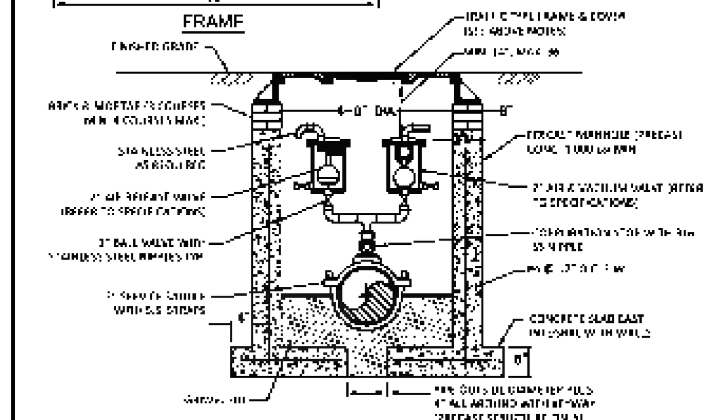

NOTES:
1. BRICK MASONRY TO BE STUCCOED WITH 1/2" MORTAR INSIDE AND OUTSIDE.
2. MANHOLE WALLS TO BE COATED INSIDE AND OUTSIDE WITH 16 MIL THICKNESS APPROVED COATING.
3. ALL OPENINGS AROUND PIPE SHALL BE SEALED WITH WATERPROOF, EXPANDING GROUT.
4. ACTUAL LOCATION AND MANHOLE FRAME ELEVATION SHALL BE AS INDICATED ON THE PLANS.
5. SHOP DRAWINGS SHALL BE SUBMITTED BY CONTRACTOR TO THE CITY PRIOR TO INSTALLATION. SHOP DRAWINGS TO SHOW DIMENSIONS, AND CONCRETE REINFORCEMENT.
6. AIR RELEASE VALVES SHALL BE INSTALLED AT LOCATIONS RECOMMENDED BY SECTION 49.2 OF THE "RECOMMENDED STANDARDS FOR WASTEWATER FACILITIES" (RSWF).

DEPARTMENT OF PUBLIC UTILITIES STANDARD DETAIL
AUTOMATIC AIR RELEASE VALVE (A.R.V.) AND MANHOLE — S-08

BTE REF DATE: 6-18-2026

#	DATE	REVISIONS

STEPHEN F. BOTEK LICENSE No. 55335 STATE OF FLORIDA PROFESSIONAL ENGINEER
June 18, 2026

THIS DOCUMENT HAS BEEN DIGITALLY SIGNED AND SEALED BY STEPHEN F. BOTEK, P.E. ON THE DATE ADJACENT TO THE SEAL.

PRINTED COPIES OF THIS DOCUMENT ARE NOT CONSIDERED SIGNED AND SEALED AND THE SIGNATURE MUST BE VERIFIED ON ANY ELECTRONIC COPIES.

WATER AND SANITARY SEWER DETAILS

EMERALD HILLS
Site E - Clubhouse
Hollywood, Florida

Botek Thurlow Engineering, Inc.
3409 NW 9th Avenue, Suite 1102, Ft. Lauderdale, FL 33309
www.botekthurlow-eng.com p: 954-568-0888 f: 954-568-0757

BTE PROJECT #: 22-0401

PROJECT DATE: 6-5-2024

SHEET #: CE-WS-9

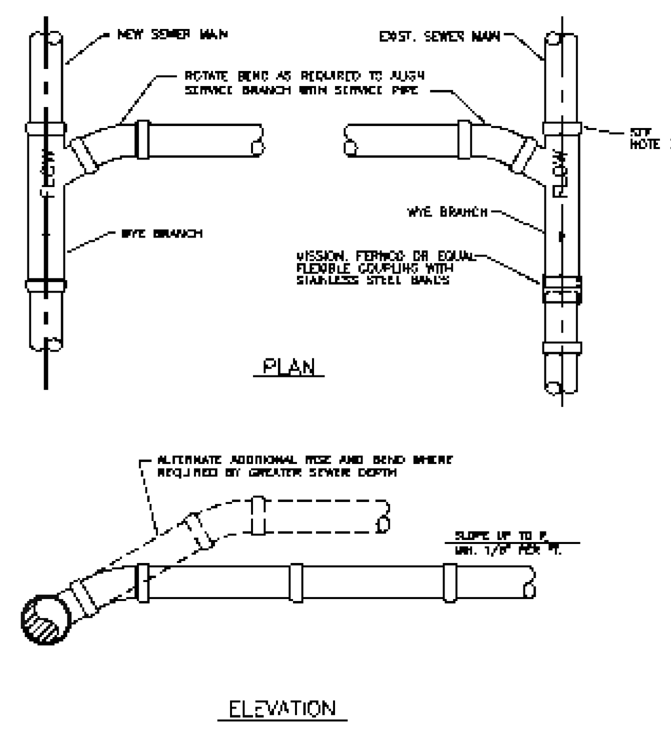

NOTES:
1. SINGLE SERVICE CONNECTIONS SHALL USE 6" PIPE AND FITTINGS.
2. USE RISER CONNECTIONS WHERE INVERT OF SEWER IS GREATER THAN 7' 0" DEEP.
3. WHERE BELL OF WYE AND SPIGOT OF EXISTING MAIN ARE NOT COMPATIBLE, USE A SECOND FLEXIBLE COUPLING.

DEPARTMENT OF PUBLIC UTILITIES STANDARD DETAIL
WYE BRANCH CONNECTION
S-09

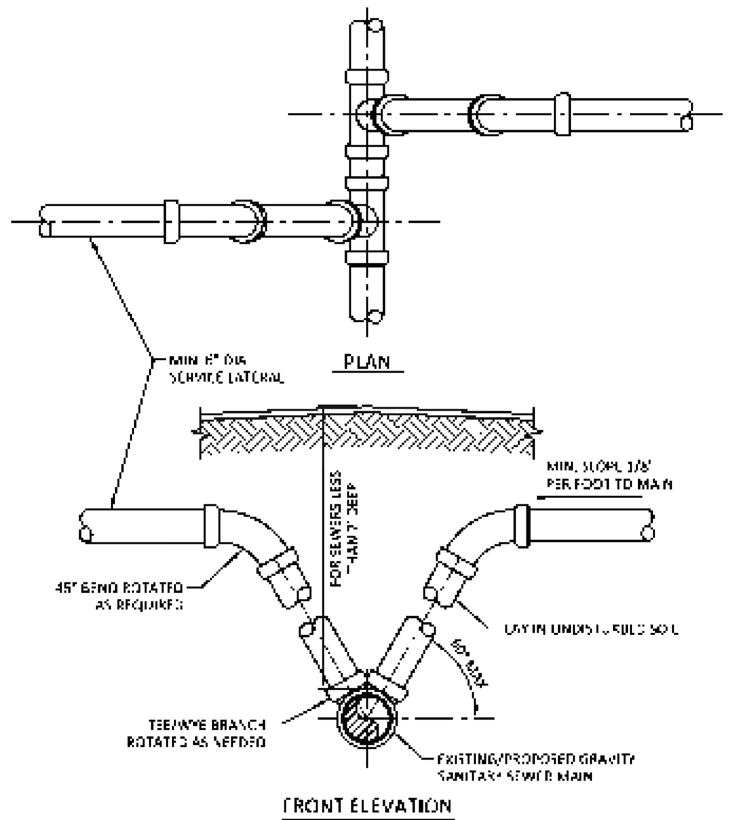

NOTES:
1. MODIFIED RISER CONNECTION TO BE USED ONLY WHEN DIRECTED BY THE CITY.
2. NO. 57 ROCK OR 3/4" DRAINFIELD LIMEROCK MAY BE USED AS BEDDING OVER UNDISTURBED SOIL WITH PVC PIPE.
3. SINGLE SERVICE CONNECTIONS SHALL USE 6" (MIN.) DIAMETER PIPE AND FITTINGS.

DEPARTMENT OF PUBLIC UTILITIES STANDARD DETAIL
SANITARY SEWER LATERAL MODIFIED RISER
S-10

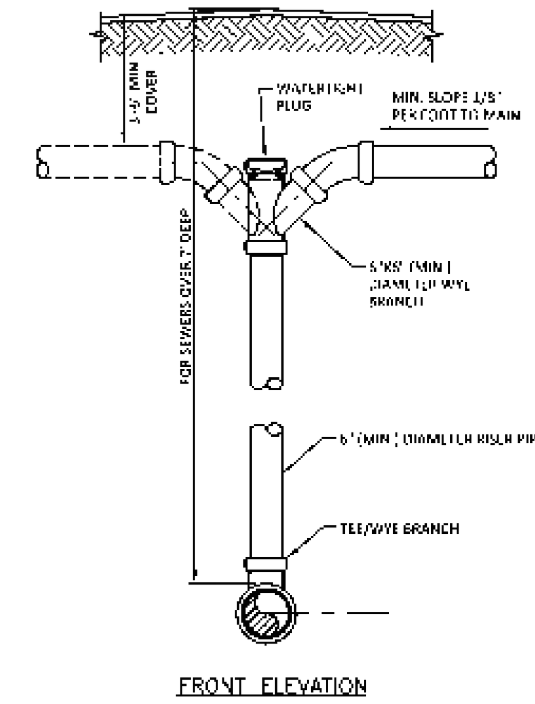

NOTES:
1. RISER CONNECTION TO BE USED ONLY WHEN SANITARY SEWER IS MORE THAN 7'-0" DEEP OR WHEN DIRECTED BY THE CITY.
2. NO. 57 ROCK OR 3/4" DRAINFIELD LIMEROCK MAY BE USED AS BEDDING OVER UNDISTURBED SOIL WITH PVC PIPE.
3. SINGLE SERVICE CONNECTIONS SHALL USE 6" (MIN.) DIAMETER PIPE AND FITTINGS.

DEPARTMENT OF PUBLIC UTILITIES STANDARD DETAIL
SANITARY SEWER LATERAL VERTICAL RISER
S-11

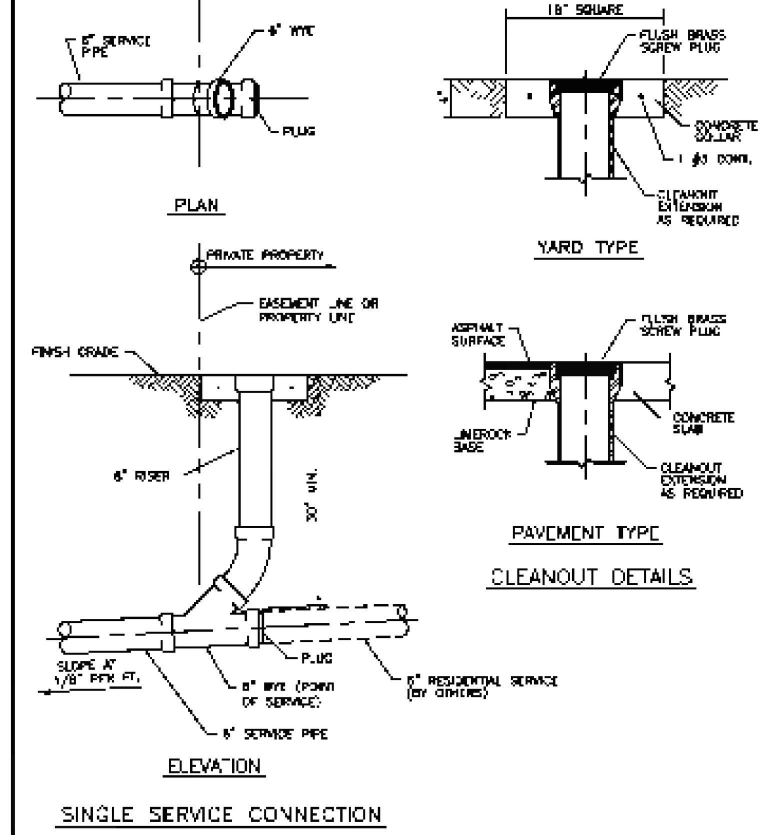

DEPARTMENT OF PUBLIC UTILITIES STANDARD DETAIL
SEWER SERVICE CONNECTION AND CLEANOUT AT PROPERTY LINE
S-12

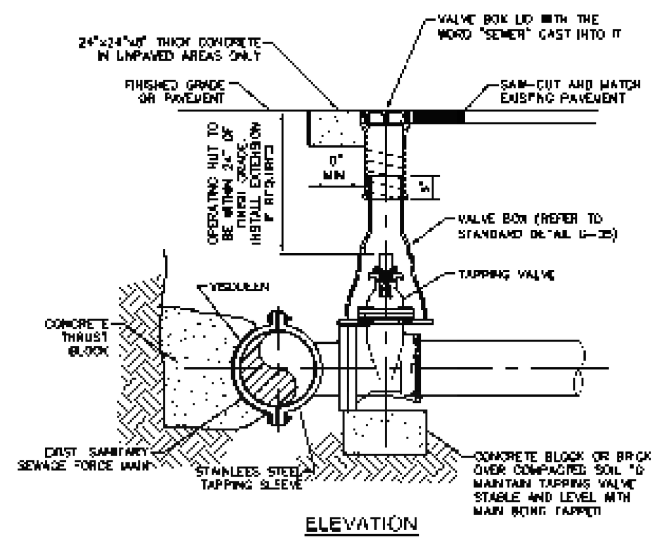

NOTES:
1. REFER TO STANDARD DETAIL GS-06, "TYPICAL TAPPING SLEEVE AND VALVE SETTING".
2. REFER TO STANDARD DETAIL S-14, "PRIVATE FORCE MAIN TIE-IN AT PROPERTY LINE".

DEPARTMENT OF PUBLIC UTILITIES STANDARD DETAIL
FORCE MAIN CONNECTION
S-13

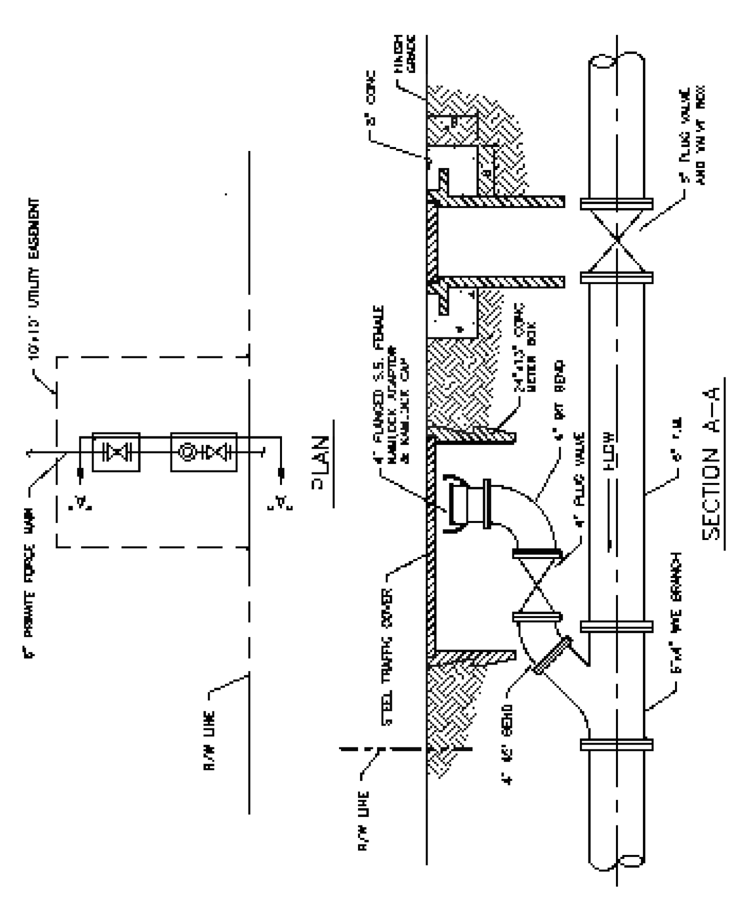

DEPARTMENT OF PUBLIC UTILITIES STANDARD DETAIL
PRIVATE FORCE MAIN TIE-IN AT PROPERTY LINE
S-14

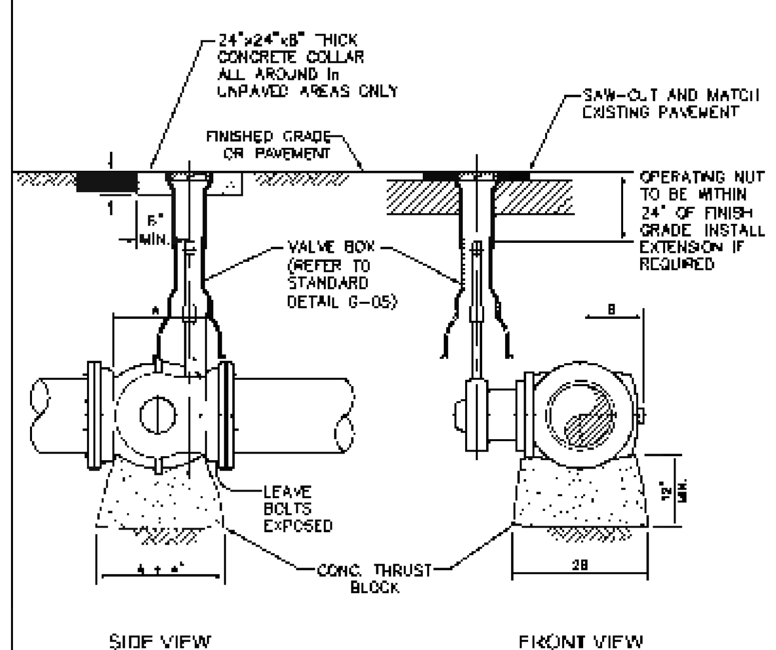

NOTE:
ALL CONCRETE TO BE 3000 P.S.I.

DEPARTMENT OF PUBLIC UTILITIES STANDARD DETAIL
PLUG VALVE
S-15

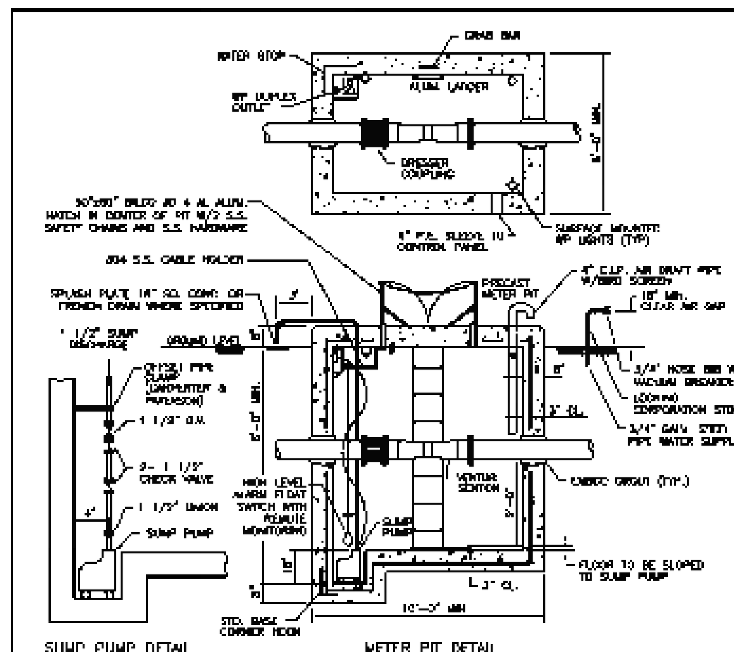

NOTES:
1. SHOP DRAWINGS SHALL BE SUBMITTED BY CONTRACTOR TO THE CITY PRIOR TO INSTALLATION. SHOP DRAWINGS TO SHOW ALL CALCULATIONS AND DIMENSIONS, INCLUDING CONCRETE REINFORCEMENT AND UPLIFT, AND SHALL BE SIGNED AND SEALED BY A FLORIDA REGISTERED PROFESSIONAL ENGINEER.
2. CONCRETE MIN. 4000 P.S.I. AT 28 DAYS, TYPE II, EXPOSED EDGES OF SLAB TO HAVE 3/4" CHAMFER.
3. THE CONTRACTOR SHALL FURNISH AND INSTALL THE FLOW METER AND INSTRUMENTATION AS SHOWN ON THE PLANS. THE FLOW METER AND ASSOCIATED INSTRUMENTATION IS TO PROVIDE FOR FLOW MEASUREMENT, INDICATING, RECORDING AND TOTALIZING OF SEWAGE IN A FULL PIPELINE OVER RANGES SPECIFIED. ACCURACY OF THE METERING SYSTEM, INCLUDING READOUT INSTRUMENTS, SHALL BE ______ OF THE ACTUAL RATE OVER THE SPECIFIED RANGE. LINEARITY AND REPEATABILITY SHALL BE ______
4. THE METER SHALL BE ______________________
5. SUMP PUMP SHALL BE ______________ 1/3 HP (OR APPROVED EQUAL WITH BALL FLOAT ACTUATOR). THE POWER OUTLET SHOULD BE MOUNTED ABOVE THE EXPECTED HIGH WATER FLOOD LEVEL.
6. INSTALL HIGH LEVEL ALARM SENSOR (FLOAT SWITCH) IN METER PIT WITH REMOTE MONITORING.

DEPARTMENT OF PUBLIC UTILITIES STANDARD DETAIL
SEWAGE FORCE MAIN METER
S-16

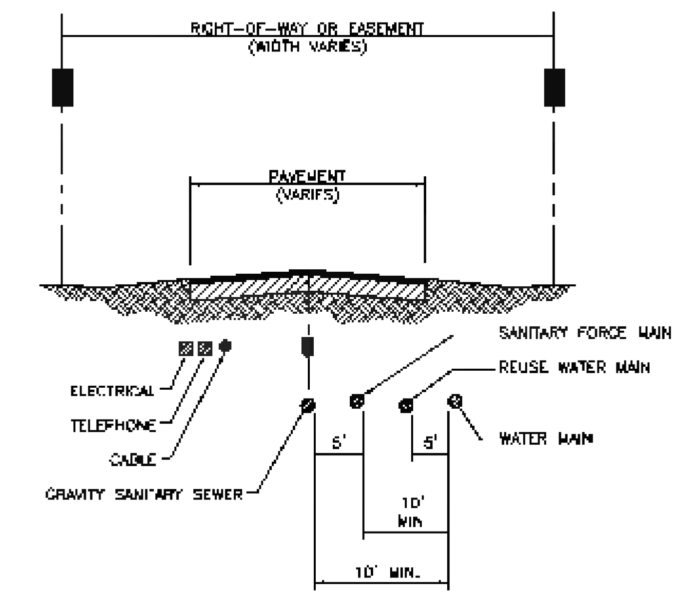

DEPARTMENT OF PUBLIC UTILITIES STANDARD DETAIL
TYPICAL UTILITY ACCOMMODATION WITHIN RIGHT-OF-WAY OR EASEMENT
G-01

WATER MAIN SEPARATION IN ACCORDANCE WITH F.A.C. RULE 62-555.314

OTHER PIPE	HORIZONTAL SEPARATION	CROSSING (1), (4)	JOINT SPACING @ CROSSING (FULL JOINT CENTERED) (8)
STORM SEWER, STORM WATER FORCE MAIN, RECLAIMED WATER(2)	[illegible]	[illegible]	[illegible]
GRAVITY SANITARY SEWER(3), SANITARY SEWER FORCE MAIN, RECLAIMED WATER	[illegible]	[illegible]	[illegible]
ON-SITE SEWAGE TREATMENT & DISPOSAL SYSTEM	[illegible]	—	—

1. WATER MAIN SHOULD CROSS ABOVE OTHER PIPE. WHEN WATER MAIN MUST BE BELOW OTHER PIPE, THE MINIMUM SEPARATION IS 12 INCHES.
2. RECLAIMED WATER REGULATED UNDER PART III OF CHAPTER 62-610, F.A.C.
3. 3 FT. FOR GRAVITY SANITARY SEWER WHERE THE BOTTOM OF THE WATER MAIN IS LAID AT LEAST 6 INCHES ABOVE THE TOP OF THE GRAVITY SANITARY SEWER.
4. 18" VERTICAL MINIMUM SEPARATION REQUIRED BY CITY OF HOLLYWOOD, UNLESS OTHERWISE APPROVED.
5. A MINIMUM 6 FOOT HORIZONTAL SEPARATION SHALL BE MAINTAINED BETWEEN ANY TYPE OF SEWER AND WATER MAIN IN PARALLEL INSTALLATIONS WHENEVER POSSIBLE.
6. IN CASES WHERE IT IS NOT POSSIBLE TO MAINTAIN A 6 FOOT HORIZONTAL SEPARATION, THE WATER MAIN MUST BE LAID IN A SEPARATE TRENCH OR ON AN UNDISTURBED EARTH SHELF LOCATED ON ONE SIDE OF THE SEWER OR FORCE MAIN AT SUCH AN ELEVATION THAT THE BOTTOM OF THE WATER MAIN IS AT LEAST 18 INCHES ABOVE THE TOP OF THE SEWER.
7. WHERE IT IS NOT POSSIBLE TO MAINTAIN A VERTICAL DISTANCE OF 18 INCHES IN A PARALLEL INSTALLATION, THE WATER MAIN SHALL BE CONSTRUCTED OF DIP AND THE SANITARY SEWER OR FORCE MAIN SHALL BE CONSTRUCTED OF DIP WITH A MINIMUM VERTICAL DISTANCE OF 6 INCHES. THE WATER MAIN SHOULD ALWAYS BE ABOVE THE SEWER. JOINTS ON THE WATER MAIN SHALL BE LOCATED AS FAR APART AS POSSIBLE FROM JOINTS ON THE SEWER OR FORCE MAIN (STAGGERED JOINTS).
8. ALL JOINTS ON THE WATER MAIN WITHIN 20 FEET OF THE CROSSING MUST BE MECHANICALLY RESTRAINED.

DEPARTMENT OF PUBLIC UTILITIES STANDARD DETAIL
SEPARATION REQUIREMENTS OF F.D.E.P.
G-01.1

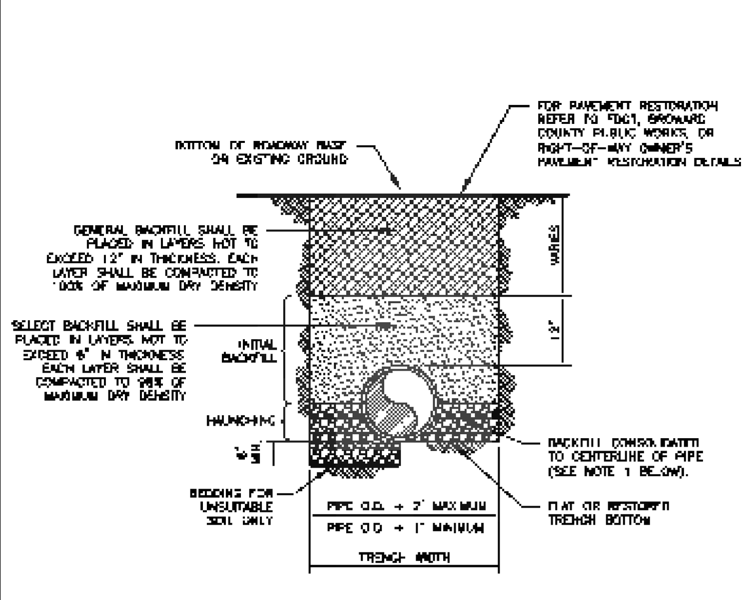

NOTES:
1. WHEN PIPE INSTALLATION IS ABOVE THE GROUND WATER TABLE ELEVATION, OR WHENEVER BEDDING COPPER PIPE UNDER ANY CONDITION, BEDDING MATERIAL SHALL BE CLEAN SANDY SOIL IF AVAILABLE WITHIN THE LIMITS OF CONSTRUCTION. IMPORTED BEDDING SHALL BE WELL GRADED, WASHED CRUSHED STONE (OR DRAINFIELD LIMEROCK). CRUSHED STONE SHALL CONSIST OF HARD, DURABLE, SUB-ANGULAR PARTICLES OF PROPER SIZE AND GRADATION, AND SHALL BE FREE FROM ORGANIC MATERIAL, WOOD, TRASH, SAND, LOAM, CLAY, EXCESS FINES, AND OTHER DELETERIOUS MATERIALS.
2. ALL BEDDING MATERIAL SHALL BE COMPACTED TO 95% OF MAXIMUM DENSITY BEFORE ANY PIPE IS LAID. FOR ADDITIONAL MATERIAL SPECIFICATIONS REFER TO SPECIFICATION SECTION 02222, "EXCAVATION AND BACKFILL FOR UTILITIES".
3. DENSITY TESTING SHALL BE IN ACCORDANCE WITH AASHTO T-180 AND ASTM D-3017.
4. BACKFILL TO COMPLY WITH FDOT DESIGN STANDARDS 125-6.

DEPARTMENT OF PUBLIC UTILITIES STANDARD DETAIL
PIPE LAYING CONDITION TYPICAL SECTION (D.I.P.)
G-02

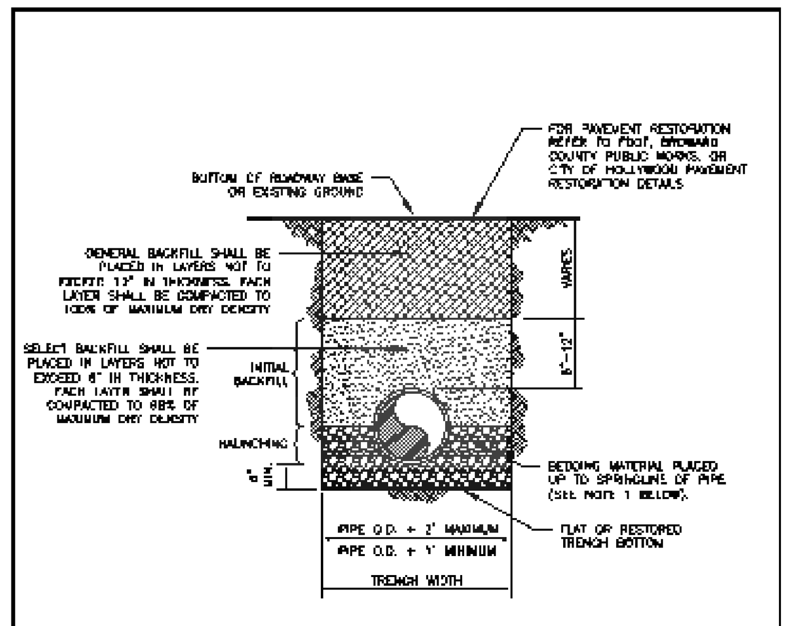

NOTES:
1. WHEN PIPE INSTALLATION IS ABOVE THE GROUND WATER TABLE ELEVATION, OR WHENEVER BEDDING COPPER PIPE UNDER ANY CONDITION, BEDDING MATERIAL SHALL BE CLEAN SANDY SOIL IF AVAILABLE WITHIN THE LIMITS OF CONSTRUCTION. IMPORTED BEDDING SHALL BE WELL GRADED, WASHED CRUSHED STONE (OR DRAINFIELD LIMEROCK). CRUSHED STONE SHALL CONSIST OF HARD, DURABLE, SUB-ANGULAR PARTICLES OF PROPER SIZE AND GRADATION, AND SHALL BE FREE FROM ORGANIC MATERIAL, WOOD, TRASH, SAND, LOAM, CLAY, EXCESS FINES, AND OTHER DELETERIOUS MATERIALS.
2. ALL BEDDING MATERIAL SHALL BE COMPACTED TO 95% OF MAXIMUM DENSITY BEFORE ANY PIPE IS LAID. FOR ADDITIONAL MATERIAL SPECIFICATIONS REFER TO SPECIFICATION SECTION 02222, "EXCAVATION AND BACKFILL FOR UTILITIES".
3. DENSITY TESTING SHALL BE IN ACCORDANCE WITH AASHTO T-180 AND ASTM D-3017.
4. BACKFILL TO COMPLY WITH FDOT DESIGN STANDARD 125-6.

DEPARTMENT OF PUBLIC UTILITIES STANDARD DETAIL
PIPE LAYING CONDITION TYPICAL SECTION (P.V.C.)
G-03

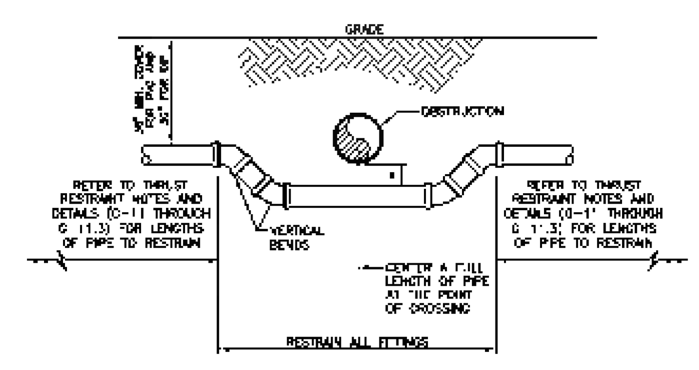

UTILITY CROSSING USING FITTINGS

* REFER TO STANDARD DETAIL G-01.1, "SEPARATION REQUIREMENTS", FOR FDEP AND HEALTH DEPARTMENT SEPARATION REQUIREMENTS.

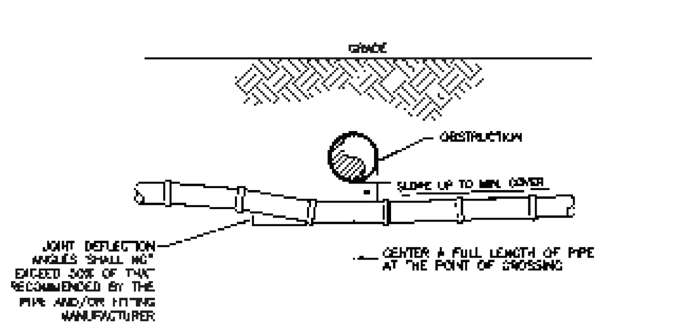

UTILITY CROSSING USING JOINT DEFLECTIONS

* REFER TO STANDARD DETAIL G-01.1, "SEPARATION REQUIREMENTS", FOR FDEP AND HEALTH DEPARTMENT SEPARATION REQUIREMENTS.

DEPARTMENT OF PUBLIC UTILITIES STANDARD DETAIL
UTILITY CROSSING DETAIL
G-04

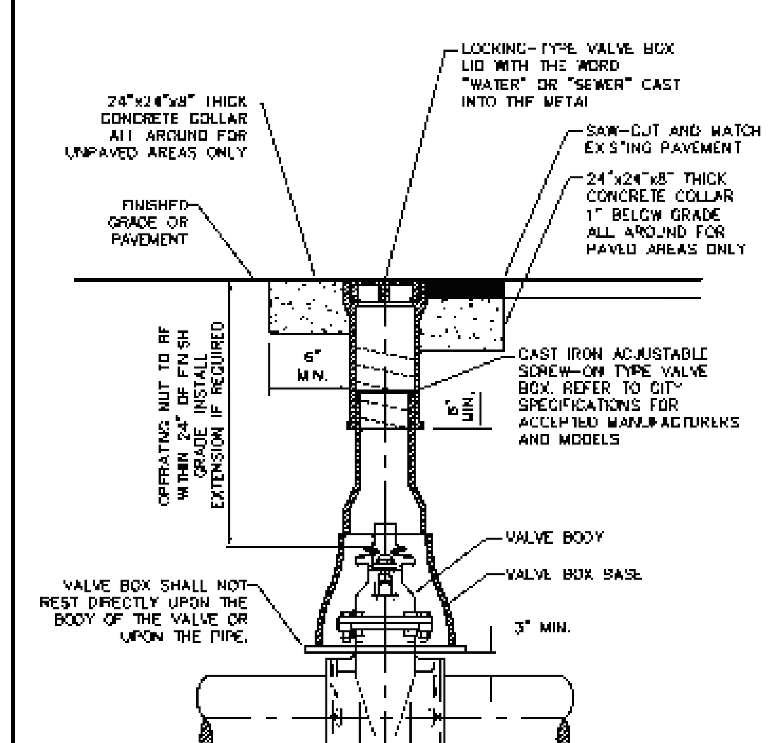

DEPARTMENT OF PUBLIC UTILITIES STANDARD DETAIL
TYPICAL VALVE BOX SETTING
G-05

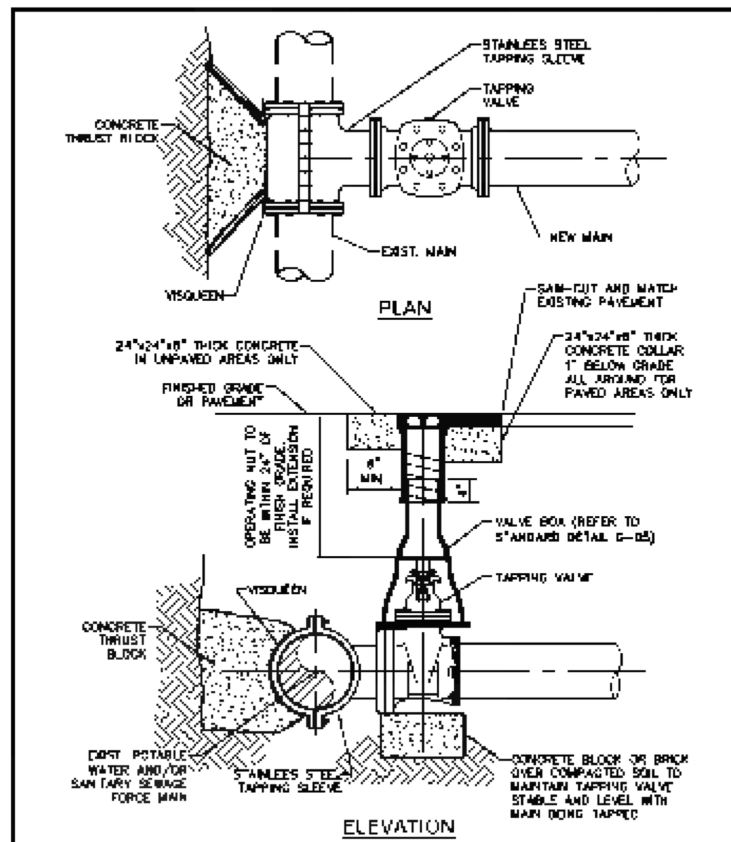

NOTES:
1. NOTIFY THE CITY OF HOLLYWOOD 48 HOURS IN ADVANCE OF PROPOSED TAP.
2. TAPPING MUST BE DONE IN THE PRESENCE OF AN AUTHORIZED CITY REPRESENTATIVE.
3. TEMPORARY THRUST BLOCKS TO BE INSTALLED AND REMAIN IN PLACE DURING TAPPING OPERATIONS.
4. FOR SEWAGE FORCE MAINS, REFER TO DETAIL OF PRIVATE FORCE MAIN TIE-IN AT PROPERTY LINE.
5. FOR WATER MAINS, A GATE VALVE OF SAME DIAMETER SHALL BE INSTALLED ON THE DOWNSTREAM SIDE OF THE TAPPING VALVE.

DEPARTMENT OF PUBLIC UTILITIES STANDARD DETAIL
TYPICAL TAPPING SLEEVE AND VALVE SETTING
G-06

BTE REF DATE: 6-18-2026

#	DATE	REVISIONS

STEPHEN F. BOTEK
LICENSE
No. 55335
STATE OF FLORIDA
PROFESSIONAL ENGINEER
June 18, 2026

THIS DOCUMENT HAS BEEN DIGITALLY SIGNED AND SEALED BY STEPHEN F. BOTEK, P.E. ON THE DATE ADJACENT TO THE SEAL.

PRINTED COPIES OF THIS DOCUMENT ARE NOT CONSIDERED SIGNED AND SEALED AND THE SIGNATURE MUST BE VERIFIED ON ANY ELECTRONIC COPIES.

WATER AND SANITARY SEWER DETAILS

EMERALD HILLS
Site E - Clubhouse
Hollywood, Florida

Botek Thurlow Engineering, Inc.
3409 NW 9th Avenue, Suite 1102, Ft. Lauderdale, FL 33309
www.botekthurlow-eng.com p: 954-568-0888 f: 954-568-0757

BTE PROJECT #: 22-0401

PROJECT DATE: 6-5-2024

SHEET #: CE-WS-10

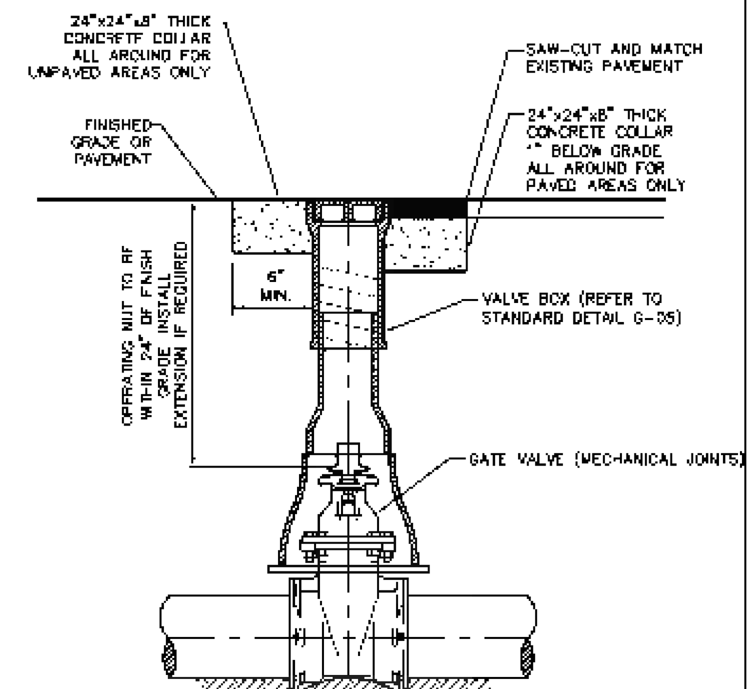

DEPARTMENT OF PUBLIC UTILITIES STANDARD DETAIL

TYPICAL GATE VALVE AND VALVE BOX SETTING

G-07

RESILIENT SEATED GATE VALVE SPECIFICATIONS:

4" THROUGH 12" SIZE
(WATER AND FORCE MAIN)

1. GATE VALVES SHALL BE RESILIENT SEATED, MANUFACTURED TO MEET OR EXCEED THE REQUIREMENTS OF AWWA C509 (LATEST REVISION) AND IN ACCORDANCE WITH THE FOLLOWING SPECIFICATIONS:

1.1. VALVES SHALL HAVE AN UNOBSTRUCTED WATERWAY EQUAL TO OR GREATER THAN THE FULL NOMINAL DIAMETER OF THE VALVE.

1.2. THE VALVES ARE TO BE NON RISING STEM WITH THE STEM MADE OF CAST, FORGED OR ROLLED BRONZE SHOWN IN AWWA C509. TWO STEM SEALS SHALL BE PROVIDED AND SHALL BE OF THE O RING TYPE, ONE ABOVE AND ONE BELOW THE THRUST COLLAR WITH LUBRICANT BETWEEN O RING.

1.3. THE STEM NUT, ALSO MADE OF BRONZE, MAY BE INDEPENDENT OF THE GATE OR CAST INTEGRALLY WITH THE GATE. IF THE STEM NUT IS CAST INTEGRALLY, THE THREADS SHALL BE STRAIGHT AND TRUE WITH THE AXIS OF THE STEM TO AVOID BINDING DURING THE OPENING OR CLOSING CYCLE.

1.4. THE SEALING MECHANISM SHALL CONSISTS OF A CAST IRON GATE HAVING A VULCANIZED SYNTHETIC RUBBER COATING OR A RUBBER SEAT MECHANICALLY RETAINED ON THE GATE. THE RESILIENT SEALING MECHANISM SHALL PROVIDE ZERO LEAKAGE AT THE WATER WORKING PRESSURE WHEN INSTALLED WITH THE LINE FLOW IN EITHER DIRECTION.

1.5. A 2 INCH SQUARE WRENCH NUT SHALL BE PROVIDED FOR OPERATING THE VALVE.

1.6. ALL VALVES ARE TO BE SUPPLIED COMPLETE AND READY FOR INSTALLATION INCLUDING, BUT NOT LIMITED TO ALL NUTS, BOLTS RINGS AND RUBBERS.

1.7. ALL VALVES ARE TO BE TESTED IN STRICT ACCORDANCE WITH AWWA C509 LATEST REVISION.

DEPARTMENT OF PUBLIC UTILITIES STANDARD DETAIL

RESILIENT SEATED GATE VALVE SPECIFICATIONS

G-07.1

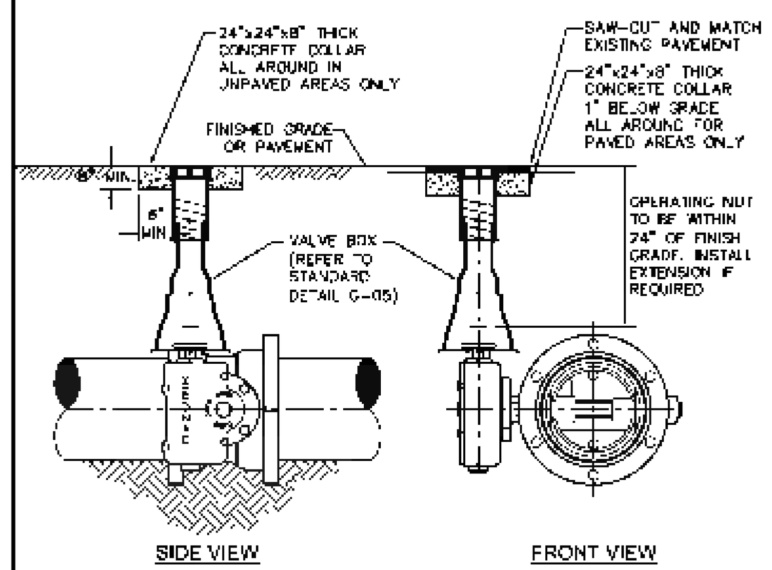

DEPARTMENT OF PUBLIC UTILITIES STANDARD DETAIL

TYPICAL BUTTERFLY VALVE SETTING

G-08

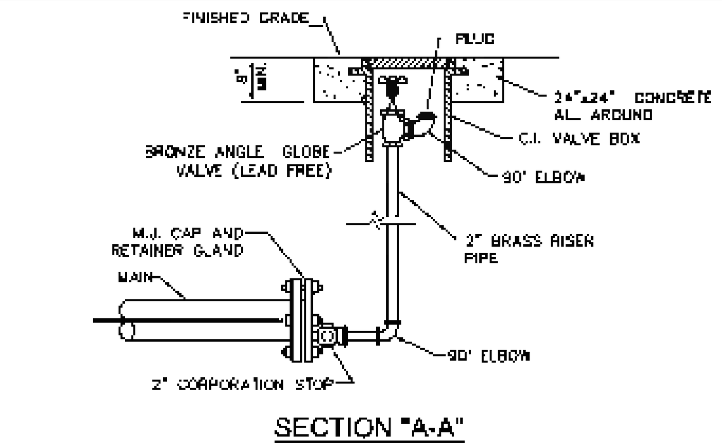

NOTES:

1. PIPE JOINT COMPOUND SHALL BE APPLIED TO MALE THREADS ONLY.
2. 2" TAP IN BOTTOM OF CAP ON MAIN
3. PLYWOOD AND CONCRETE TO HAVE A HEIGHT EQUAL TO THE DIAMETER OF THE PIPE.
4. ALL FITTINGS TO BE MADE OF BRASS.

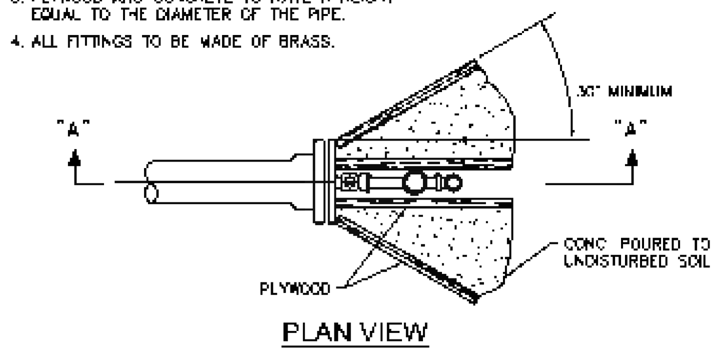

DEPARTMENT OF PUBLIC UTILITIES STANDARD DETAIL

TERMINAL BLOW-OFF DETAIL

G-09

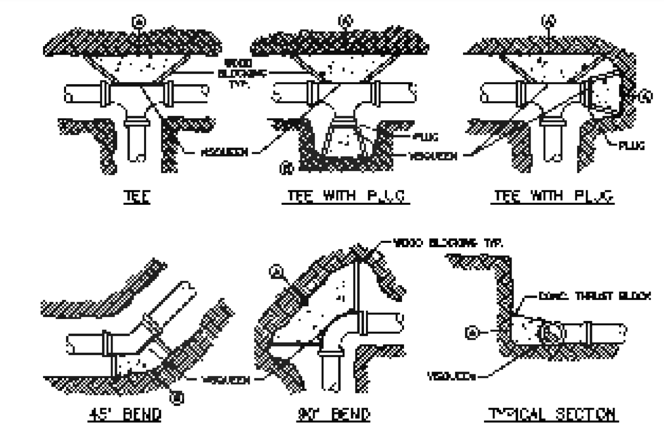

MINIMUM CONCRETE THRUST BLOCKING BEARING ON UNDISTURBED MATERIAL (SQ. FT.)				
MARK	PIPE SIZE			
	4" OR 6"	8"	10"	12"
A				
B				

NOTES:

1. THRUST BLOCKS ARE TO BE USED IN COMBINATION WITH, AND NOT IN LIEU OF, MECHANICAL JOINT RESTRAINTS AS REQUIRED BY THE CITY. REFER TO THRUST RESTRAINT DESIGN TABLE IN STANDARD DETAIL G-11.
2. THE AREAS IN THE TABLE ARE BASED ON _____ POUNDS PER SQUARE FOOT SOIL BEARING AGAINST THE UNDISTURBED TRENCH WALL AND ARE TO REPRESENT THE MINIMUM VERTICAL PROJECTED AREA AT THE THRUST BLOCK IN A PLANE PERPENDICULAR TO THE LINE BISECTING THE INCLUDING ANGLE OF THE FITTING.
3. POUR THRUST BLOCKS AGAINST UNDISTURBED MATERIAL. WHERE TRENCH WALL HAS BEEN DISTURBED, EVACUATE LOOSE MATERIAL AND EXTEND THRUST BLOCK TO UNDISTURBED MATERIAL.
4. ON BENDS AND TEES, EXTEND THRUST BLOCKS FULL LENGTH OF FITTING.
5. DO NOT COVER COUPLING OR JOINTS WITH CONCRETE.
6. CONCRETE TO BE 2500 P.S.I. MINIMUM 28 DAY STRENGTH.
7. TABLE TO BE COMPLETED BY DESIGN ENGINEER.

DEPARTMENT OF PUBLIC UTILITIES STANDARD DETAIL

THRUST BLOCK DESIGN

G-10

THRUST RESTRAINT NOTES:

1. ALL JOINTS BETWEEN BENDS AT HORIZONTAL & VERTICAL OFFSETS SHALL BE RESTRAINED.
2. MECHANICAL THRUST RESTRAINTS FOR D.I.P. FITTINGS ON D.I.P. OR P.V.C. PIPE SHALL BE MEGALUG AS MANUFACTURED BY EBAA IRON, INC., OR APPROVED EQUAL.
3. DUCTILE IRON FITTINGS UP TO 20 INCHES IN DIAMETER SHALL BE RESTRAINED BY MECHANICAL MEANS, I.E., MEGALUGS OR APPROVED EQUAL.
4. DUCTILE IRON FITTINGS 24 INCH IN DIAMETER AND ABOVE SHALL BE RESTRAINED BY MECHANICAL MEANS, I.E., MEGALUGS OR APPROVED EQUAL, WITH THE ADDITION OF THRUST BLOCKS AND CONCRETE ANCHORS AT THE DISCRETION OF THE ENGINEER OF RECORD.
5. ANY THRUST BLOCKS AND ANCHORS ARE TO BE DESIGNED BY THE ENGINEER OF RECORD. SIGNED AND SEALED CALCULATIONS SHALL BE SUBMITTED TO THE CITY FOR APPROVAL PRIOR TO INSTALLATION.
6. THRUST BLOCKS CONSISTING OF POURED-IN-PLACE CONCRETE SHALL HAVE A MINIMUM COMPRESSIVE STRENGTH OF 2,500 PSI AFTER 28 DAYS.

DEPARTMENT OF PUBLIC UTILITIES STANDARD DETAIL

JOINT RESTRAINT DESIGN FOR PVC AND DIP THRUST RESTRAINT NOTES

G-11

HORIZONTAL BENDS			
PIPE DIA (INCHES)	BEND (ANGLE)	RESTRAINED LENGTH (RL)(FT)	
		PVC	*DIP
24	11¼		
	22½		
	45		
	90		
16	11¼		
	22½		
	45		
	90		
12	11¼		
	22½		
	45		
	90		
8	11¼		
	22½		
	45		
	90		
6	11¼		
	22½		
	45		
	90		
4	11¼		
	22½		
	45		
	90		

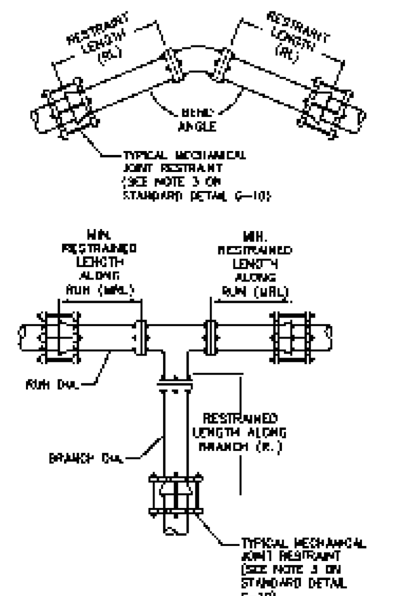

TEES AND TAPPING SLEEVES									
RUN DIA (INCHES)	BRANCH DIA (INCHES)	MINIMUM RESTRAINED LENGTH ALONG RUN (MRL)	MINIMUM RESTRAINED LENGTH ALONG BRANCH (RL)		RUN DIA (INCHES)	BRANCH DIA (INCHES)	MINIMUM RESTRAINED LENGTH ALONG RUN (MRL)	MINIMUM RESTRAINED LENGTH ALONG BRANCH (RL)	
			PVC	*DIP				PVC	*DIP
24"	24"				12"	12"			
	16"					8"			
	12"					6"			
	8"					4"			
	6"				8"	8"			
	4"					6"			
16"	16"					4"			
	12"				6"	6"			
	8"					4"			
	6"				4"	4"			
	4"								

*ALL DIP JOINT-RESTRAINT CALCULATIONS ASSUME THE PIPE WILL BE WRAPPED IN POLYETHYLENE ENCASEMENT

DEPARTMENT OF PUBLIC UTILITIES STANDARD DETAIL

JOINT RESTRAINT DESIGN FOR PVC AND DIP HORIZONTAL BENDS AND TEES

G-11.1

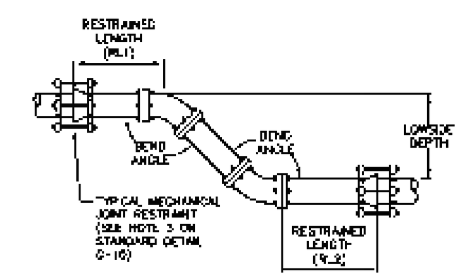

VERTICAL OFFSETS						
			PVC		*DIP	
PIPE DIA (INCHES)	BEND (ANGLE)	LOWSIDE DEPTH (FT)	RESTRAINED LENGTHS RL1 (FT)	RL2 (FT)	RESTRAINED LENGTHS RL1 (FT)	RL2 (FT)
24	45	4				
		5				
		6				
		7				
16	45	4				
		5				
		6				
		7				
12	45	4				
		5				
		6				
		7				
8	45	4				
		5				
		6				
		7				
6	45	4				
		5				
		6				
		7				
4	45	4				
		5				
		6				
		7				

*ALL DIP JOINT-RESTRAINT CALCULATIONS ASSUME THE PIPE WILL BE WRAPPED IN POLYETHYLENE ENCASEMENT

DEPARTMENT OF PUBLIC UTILITIES STANDARD DETAIL

JOINT RESTRAINT DESIGN FOR PVC AND DIP VERTICAL OFFSETS

G-11.2

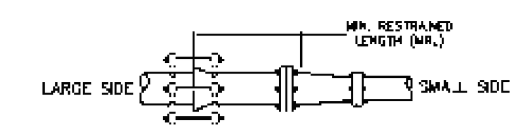

REDUCERS							
LARGE SIDE	SMALL SIDE	MINIMUM LENGTH TO RESTRAIN ON LARGE SIDE (FT)		LARGE SIDE	SMALL SIDE	MINIMUM LENGTH TO RESTRAIN ON LARGE SIDE (FT)	
		PVC	*DIP			PVC	*DIP
24"	16"			12"	8"		
	12"				6"		
	8"				4"		
	6"			8"	6"		
	4"				4"		
16"	12"				3"		
	8"			6"	4"		
	6"				2"		
	4"			4"	2"		

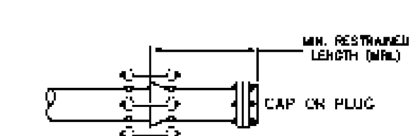

DEAD ENDS		
PIPE DIA (INCHES)	MIN. RESTRAINED LENGTH (FT)	
	PVC	*DIP
24"		
16"		
12"		
8"		
6"		
4"		

*ALL DIP JOINT-RESTRAINT CALCULATIONS ASSUME THE PIPE WILL BE WRAPPED IN POLYETHYLENE ENCASEMENT

DEPARTMENT OF PUBLIC UTILITIES STANDARD DETAIL

JOINT RESTRAINT DESIGN FOR PVC AND DIP REDUCERS AND DEAD ENDS

G-11.3

FLEXIBLE PAVEMENT RESTORATION NOTES:

1. THE ABOVE DETAILS APPLY ONLY TO ASPHALT PAVEMENT RESTORATION OVER UTILITY TRENCHES CUT WITHIN CITY OF HOLLYWOOD RIGHTS-OF-WAY. FOR PAVEMENT RESTORATION WITHIN BROWARD COUNTY OR FDOT RIGHTS-OF-WAY REFER TO THE CORRESPONDING DETAILS FOR THOSE AGENCIES.
2. LIMEROCK BASE MATERIAL SHALL HAVE A MINIMUM L.B.R. OF 100 AND A MINIMUM CARBONATE CONTENT OF 70%. REPLACED BASE MATERIAL OVER TRENCH SHALL BE A MINIMUM OF 12" THICK.
3. LIMEROCK BASE MATERIAL SHALL BE PLACED IN 12" MAXIMUM (LOOSE MEASUREMENT) THICKNESS LAYERS WITH EACH LAYER THOROUGHLY ROLLED OR TAMPED AND COMPACTED TO 100% OF MAXIMUM DENSITY PER AASHTO T-180, PRIOR TO THE PLACEMENT OF THE SUCCEEDING LAYERS.
4. STABILIZED SUBGRADE MATERIAL SHALL BE GRANULAR AND SHALL HAVE A MINIMUM L.B.R. OF 40.
5. BACKFILL SHALL BE PLACED AND COMPACTED IN ACCORDANCE WITH THE PIPE LAYING CONDITION TYPICAL SECTIONS IN DETAILS G-02 AND G-03, AND THE SPECIFICATIONS, BUT TESTING WILL BEGIN 12" ABOVE THE INSTALLED FACILITY.
6. ALL EDGES AND JOINTS OF EXISTING ASPHALT PAVEMENT SHALL BE SAW CUT TO STRAIGHT LINES, PARALLEL TO OR PERPENDICULAR TO THE ROADWAY, PRIOR TO THE RESURFACING.
7. RESURFACING MATERIAL SHALL BE FDOT SUPERPAVE, AND SHALL BE APPLIED A MINIMUM OF TWO INCH IN THICKNESS.
8. MILL AND BUTT JOINT TO EXISTING PAVEMENT.
9. IF THE TRENCH IS FILLED TEMPORARILY, IT SHALL BE COVERED WITH A 2" ASPHALTIC CONCRETE PATCH TO KEEP THE FILL MATERIAL FROM RAVELING UNTIL REPLACED WITH A PERMANENT PATCH.
10. REFER TO SPECIFICATIONS FOR DETAILED PROCEDURES.
11. WHERE THE UTILITY TRENCH CROSSES EXISTING ASPHALT DRIVEWAYS, THE LIMEROCK BASE THICKNESS MAY BE A MINIMUM OF 6 INCHES THICK REGARDLESS OF THE EXTENT OF IMPACT. THE ENTIRE DRIVEWAY SURFACE BETWEEN THE EDGE OF THE ROADWAY PAVEMENT AND PROPERTY LINE OR FRONT OF SIDEWALK SHALL BE OVERLAID USING 2 INCH THICK MINIMUM ASPHALTIC CONCRETE SURFACE COURSE WHERE INDICATED ON THE PLANS OR AS DIRECTED BY THE CITY/ENGINEER.

DEPARTMENT OF PUBLIC UTILITIES STANDARD DETAIL

FLEXIBLE PAVEMENT RESTORATION NOTES

G-12

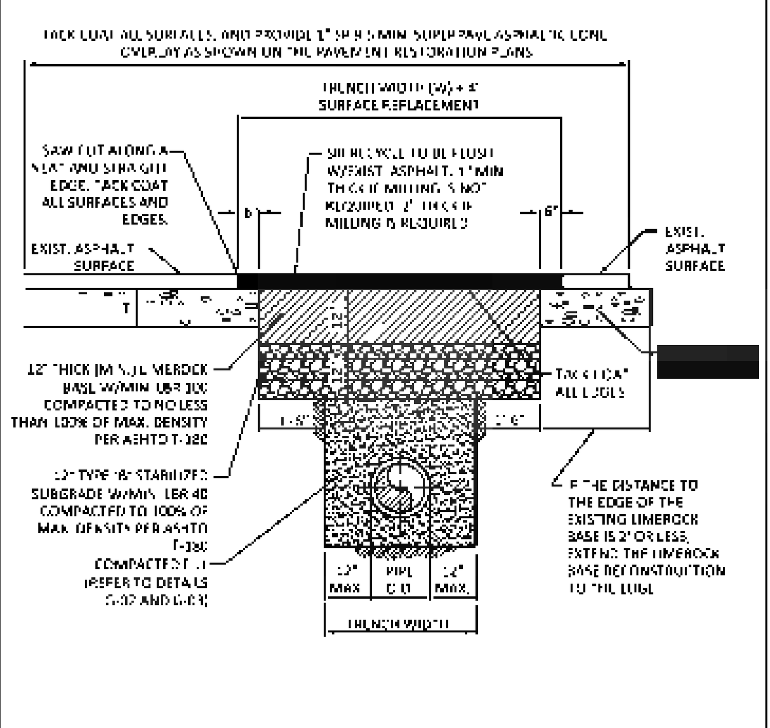

DEPARTMENT OF PUBLIC UTILITIES STANDARD DETAIL

FLEXIBLE PAVEMENT RESTORATION FOR TRENCHES CUT PERPENDICULAR AND PARALLEL TO THE ROADWAY

G-12.1

NOTE:
IF CRACKS APPEAR IN ASPHALT ADJACENT TO CUT, EDGES MUST BE SAW CUT TO A STRAIGHT LINE 6" BEYOND THE FURTHEST CRACK

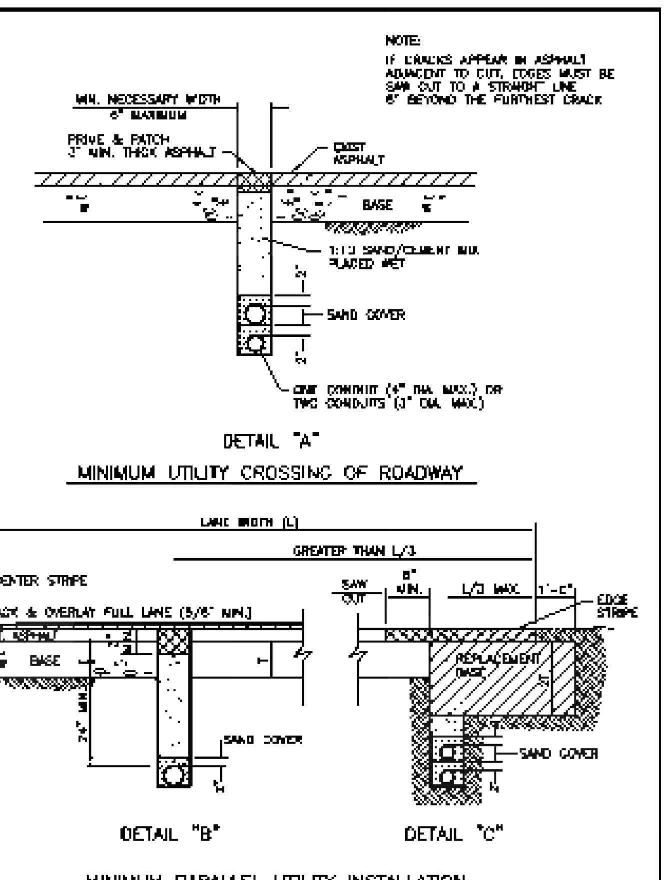

NOTE
DETAILS NOT SHOWN SHALL BE AS PER DETAIL "A"

DEPARTMENT OF PUBLIC UTILITIES STANDARD DETAIL

FLEXIBLE PAVEMENT RESTORATION FOR CONDUIT

G-12.2

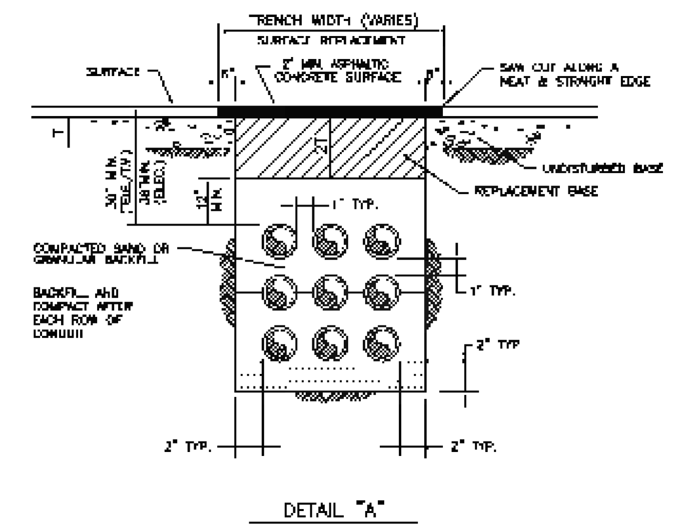

NOTES:

1. REPLACED BASE MATERIAL OVER TRENCH SHALL BE TWICE THE THICKNESS OF THE ORIGINAL BASE, MINIMUM 12", MAXIMUM 18".
2. BASE MATERIAL SHALL BE PLACED IN 6" MAXIMUM (LOOSE MEASUREMENT) LAYERS AND EACH LAYER THOROUGHLY ROLLED OR TAMPED TO 98% OF MAXIMUM DENSITY, PER AASHTO T-180.
3. ASPHALT CONCRETE PAVEMENT JOINTS SHALL BE MECHANICALLY SAWED.
4. SURFACE TREATED PAVEMENT JOINTS SHALL BE LAPPED AND FEATHERED.
5. SURFACE MATERIAL SHALL BE CONSISTENT WITH THE EXISTING SURFACE.
6. BASE MATERIAL SHALL HAVE A MINIMUM LBR OF 100 AND A MINIMUM CARBONATE CONTENT OF 70%.
7. IF THE TRENCH IS FILLED TEMPORARILY, IT SHALL BE COVERED WITH A 2" ASPHALTIC CONCRETE PATCH TO KEEP THE FILL MATERIAL FROM RAVELING UNTIL REPLACED WITH A PERMANENT PATCH.
8. BACKFILL SHALL BE IN ACCORDANCE WITH DETAIL OF PIPE LAYING CONDITION TYPICAL SECTION, EXCEPT AS SHOWN ABOVE.

DEPARTMENT OF PUBLIC UTILITIES STANDARD DETAIL

FLEXIBLE PAVEMENT RESTORATION FOR DUCTBANKS

G-12.3

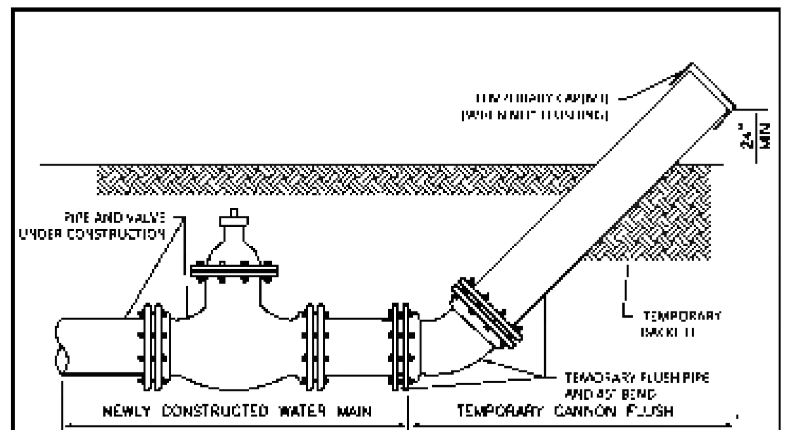

GENERAL NOTES:

1. FLUSHING LOCATIONS ARE TO BE PROPOSED BY CONTRACTOR AND APPROVED BY ECSD.
2. UPON COMPLETION OF THE PIPE INSTALLATION FOR ANY SECTION, THE MAIN SHALL BE CANNON FLUSHED TO REMOVE DIRT AND ANY OTHER FOREIGN MATTER.
3. INSTALL A TEMPORARY 45° BEND AND ASSOCIATED TEMPORARY PIPING AS SHOWN TO DIRECT THE FLUSHING WATER AWAY FROM THE IMMEDIATE WORK AREA AND EXERCISE DUE CARE SO AS TO ENSURE THAT THE WATER USED IN FLUSHING DOES NOT CAUSE A NUISANCE OR INFLICT PROPERTY DAMAGE.
4. BENDS AND PIPING SHALL BE THE SAME SIZE OR LARGER AS THE LINE BEING FLUSHED.
5. PRIOR TO THE ACTUAL LINE FLUSHING OPERATION THE CONTRACTOR SHALL PROPERLY NOTIFY ECSD INSPECTOR OF SUCH INTENDED WATER USE.
6. NO EXISTING VALVE SHALL BE OPERATED, EXCEPT BY AUTHORIZED CITY PERSONNEL.
7. FLUSHING SHALL NOT BE ACCOMPLISHED WITHOUT THE ACTUAL PRESENCE OF THE ECSD INSPECTOR.
8. AFTER THE LINE UNDER CONSTRUCTION HAS BEEN SUCCESSFULLY FLUSHED, THE CONTRACTOR SHALL REMOVE THE TEMPORARY PIPING ARRANGEMENT AND PROCEED WITH THE REMAINING CONSTRUCTION AS SPECIFIED.
9. ALL PIPING SHALL BE MECHANICALLY RESTRAINED IN ACCORDANCE WITH CITY STANDARDS.
10. IF REQUIRED BY ECSD, WATER SHALL MAINS SHALL BE CLEANED BY PIGGING.
11. CONTRACTOR WILL INSTALL A PRESSURE GAUGE AT OR NEAR THE FILL AND FLUSH LOCATION AND MAINTAIN A MINIMUM PRESSURE OF 40 PSI AT ALL TIMES. THE FILL VALVE WILL BE OPENED AND CLOSED SLOWLY TO AVOID RAPID PRESSURE CHANGES IN THE WATER SYSTEM.
12. CONTRACTOR IS CAUTIONED THAT GOVERNING AGENCIES OR UTILITIES MAY HAVE REGULATIONS LIMITING OR PROHIBITING DISCHARGE INTO SEWERS, SURFACE WATERS, CANALS, DITCHES AND OTHER CONVEYANCES. OBTAINING AND COMPLIANCE WITH GOVERNING AGENCIES REQUIREMENTS INCLUDING PERMITTING, IF REQUIRED, IS THE SOLE RESPONSIBILITY OF THE CONTRACTOR.
13. CANNON FLUSHING TO PROCEED AFTER HEALTH DEPARTMENT CLEARANCE IS RECEIVED.

DEPARTMENT OF PUBLIC UTILITIES STANDARD DETAIL

CANNON FLUSHING

G-13

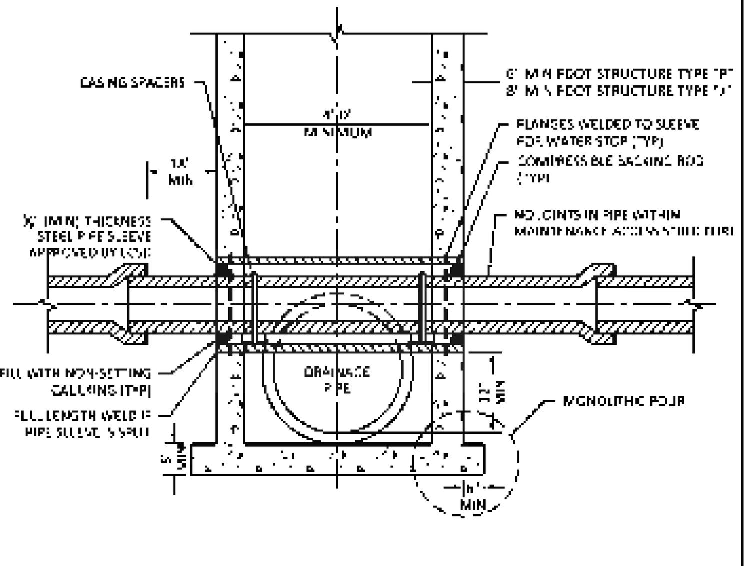

NOTES:

1. ALL CONFLICT MAINTENANCE ACCESS STRUCTURE SHALL CONFORM TO THE DETAILS SHOWN ON THIS DRAWING, AND TO THE REQUIREMENTS OF ASTM C-478 AND BROWARD COUNTY HIGHWAY CONSTRUCTION AND ENGINEERING DIVISION'S "MINIMUM STANDARDS", LATEST EDITION.
2. POTABLE WATER PIPE SHALL NOT PASS THROUGH OR CONTACT STORM DRAINAGE MAINTENANCE ACCESS STRUCTURE WITHOUT WRITTEN PERMISSION OF ECSD.
3. POTABLE WATER PIPE SHALL NOT PASS THROUGH OR CONTACT SANITARY SEWER MAINTENANCE ACCESS STRUCTURE.
4. MINIMUM TWO (2) FOOT CLEARANCE REQUIRED BETWEEN OUTSIDE OF SLEEVE AND PARALLEL WALL.
5. CONFLICT STRUCTURE TO COMPLY WITH REQUIREMENTS OF CHAPTER 62 555.314 (FAC).

DEPARTMENT OF PUBLIC UTILITIES STANDARD DETAIL

CONFLICT MAINTENANCE ACCESS STRUCTURE

G-14

BTE REF DATE: 6-18-2026

#	DATE	REVISIONS

STEPHEN F. BOTEK
LICENSE
No. 55335
STATE OF FLORIDA
PROFESSIONAL ENGINEER
June 18, 2026

THIS DOCUMENT HAS BEEN DIGITALLY SIGNED AND SEALED BY STEPHEN F. BOTEK, P.E. ON THE DATE ADJACENT TO THE SEAL.

PRINTED COPIES OF THIS DOCUMENT ARE NOT CONSIDERED SIGNED AND SEALED AND THE SIGNATURE MUST BE VERIFIED ON ANY ELECTRONIC COPIES.

WATER AND SANITARY SEWER DETAILS

EMERALD HILLS
Site E - Clubhouse
Hollywood, Florida

Botek Thurlow Engineering, Inc.
3409 NW 9th Avenue, Suite 1102, Ft. Lauderdale, FL 33309
www.botekthurlow-eng.com p: 954-568-0888 f: 954-568-0757

BTE PROJECT #: 22-0401

PROJECT DATE: 6-5-2024

SHEET #: CE-WS-11

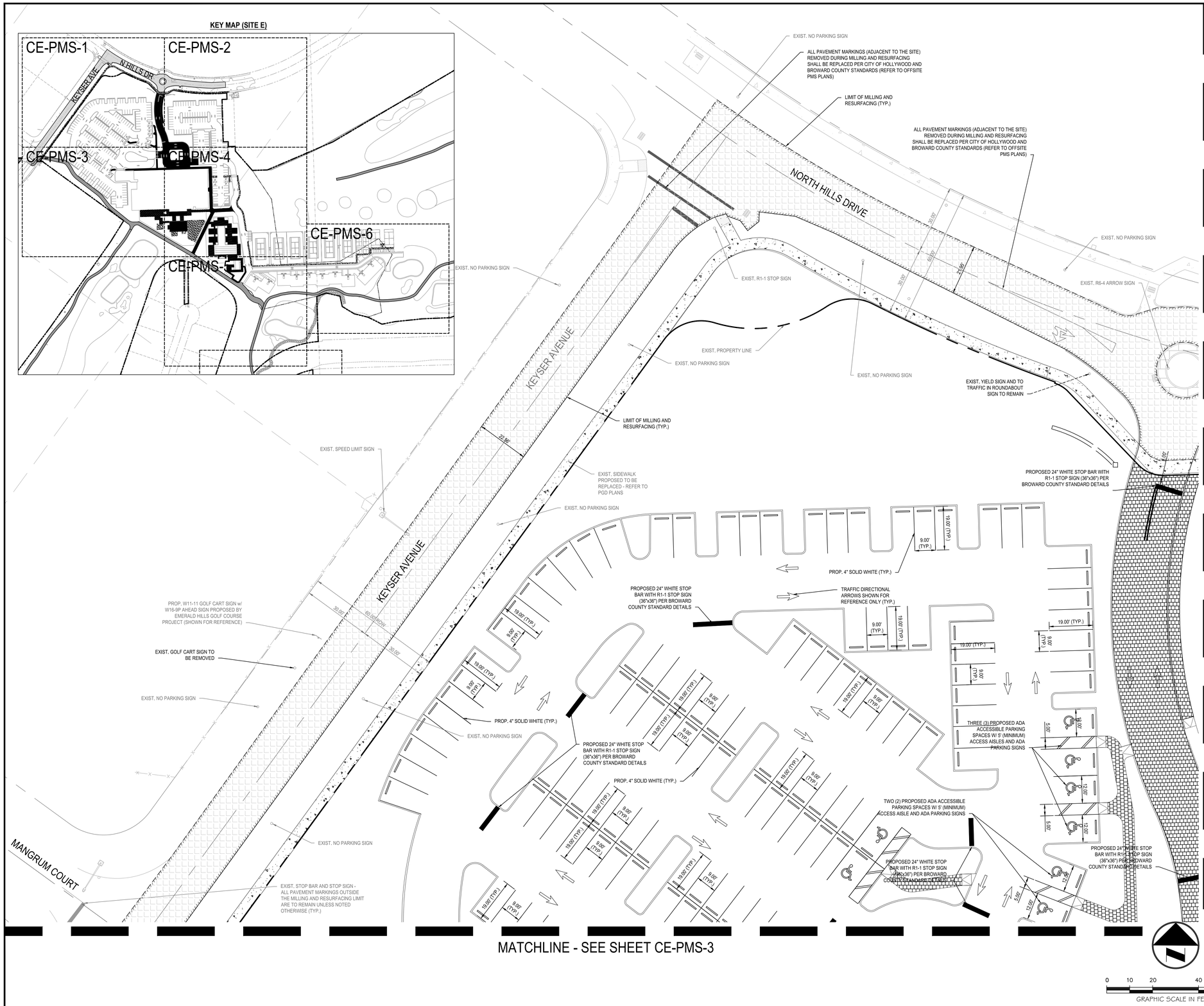

PAVEMENT MARKING & SIGNAGE NOTES:

1. ALL PAVEMENT MARKING & SIGNAGE TO BE IN ACCORDANCE WITH THE "MANUAL OF UNIFORM TRAFFIC CONTROL DEVICES" (MUTCD) (LATEST EDITION), FDOT STANDARDS (LATEST EDITION), AND BROWARD COUNTY HIGHWAY CONSTRUCTION AND ENGINEERING DIVISION STANDARDS (LATEST EDITION).
2. ALL PAVEMENT MARKINGS IN OR ADJACENT TO THE PUBLIC RIGHT OF WAY ARE TO BE ALKYD BASED THERMOPLASTIC AND FULLY RETROREFLECTORIZED.
3. PAVEMENT MARKING SHALL BE UNIFORM ACROSS THE ENTIRE STRIPE AND HAVE A MINIMUM RETRO-REFLECTIVITY OF 250 MILLICANDELAS FOR WHITE AND 175 FOR YELLOW PER BCTED MOST CURRENT STANDARDS.
4. ALL PAVEMENT MARKINGS ON PAVER SYSTEMS SHALL BE 3M 380/381 SERIES TAPE AND APPLIED WITH P60 ADHESIVE AS PER MANUFACTURER'S SPECIFICATIONS.
5. FDOT APPROVED SEALER SHALL BE USED WHEN APPLYING MARKINGS ON CONCRETE.
6. EXISTING MARKINGS SHALL BE REMOVED BY SANDBLASTING ONLY.
7. ALL REGULATORY SIGNS SHALL BE TYPE XI SHEETING MATERIAL.
8. SEE FDOT INDEX NO. 706 FOR PLACEMENT OF RPM's. (FOR BULLNOSE RPM TREATMENT, SEE LEGEND NO. 1)
9. RPM's SHALL BE CLASS "B" 911 OR EQUIVALENT, APPLIED WITH EPOXY OR BITUMINOUS ADHESIVE.
10. ALL STOP BARS TO BE 4' BEHIND CROSSWALK OR SIDEWALK.

BCTED NOTE:

THE FOLLOWING ITEMS ARE NOT REVIEWED OR ACCEPTED BY BROWARD COUNTY:

1. BROWARD COUNTY TRAFFIC ENGINEERING DIVISION'S REVIEW DOES NOT INCLUDE A REVIEW AND ACCEPTANCE OF THE PROJECT'S DESIGN OR OPERATION. THESE ITEMS ARE TO BE REVIEWED AND APPROVED BY THE CITY ENGINEER.

2. BROWARD COUNTY TRAFFIC ENGINEERING DIVISION DOES NOT REVIEW AND APPROVE, OR INSPECT AND ACCEPT THE FOLLOWING ITEMS FOR MAINTENANCE: PAVEMENT MARKINGS ON OR ADJACENT TO PAVER BRICKS, PAINTED ASPHALT, STAMPED ASPHALT OR PAVEMENT MARKINGS MADE OF PAVER BRICKS, RAISED INTERSECTIONS AND RELATED MARKINGS AND SIGNING, UN-WARRANTED MID-BLOCK CROSSWALKS AND RELATED MARKINGS AND SIGNING, UN-WARRANTED CROSSWALKS AND RELATED MARKINGS AND SIGNING, PAINTED/DECORATIVE CROSSWALKS, RAISED CROSSWALKS AND RELATED MARKINGS AND SIGNING, BLINKER SIGNS, RECTANGULAR RAPID FLASHER BEACONS AND RELATED MARKINGS AND SIGNING, ON-STREET PARKING AND RELATED MARKINGS AND SIGNING, IN-ROAD LIGHTING AND RELATED MARKINGS AND SIGNING, GREEN BIKE LANES, FLEXIBLE DELINEATORS, DECORATIVE SIGNS AND DECORATIVE SIGN POSTS, PLANTERS, ON-SITE PAVEMENT MARKINGS AND SIGNING, OFF-SITE PAVEMENT MARKINGS AND SIGNING IN RIGHT-OF-WAY THAT IS NOT DEDICATED FOR PUBLIC USE, SIDEWALK WORK OR ASPHALT WORK.

3. THE CITY ENGINEER IS RESPONSIBLE FOR THE REVIEW AND APPROVAL OF THE DESIGN AND OPERATION OF THE PROJECT, AND FOR THE INSPECTION AND ACCEPTANCE OF THE FOLLOWING ITEMS THAT WILL BE MAINTAINED BY THE CITY: PAVEMENT MARKINGS ON OR ADJACENT TO PAVER BRICKS, PAINTED ASPHALT, STAMPED ASPHALT OR PAVEMENT MARKINGS MADE OF PAVER BRICKS, PAVEMENT MARKINGS ON OR ADJACENT TO PAINTED ASPHALT, RAISED INTERSECTIONS AND RELATED MARKINGS AND SIGNING, UN-WARRANTED MID-BLOCK CROSSWALKS AND RELATED MARKINGS AND SIGNING, UN-WARRANTED CROSSWALKS AND RELATED MARKINGS AND SIGNING, PAINTED/DECORATIVE CROSSWALKS, RAISED CROSSWALKS AND RELATED MARKINGS AND SIGNING, BLINKER SIGNS,RECTANGULAR RAPID FLASHER BEACONS AND RELATED MARKINGS AND SIGNING, ON-STREET PARKING AND RELATED MARKINGS AND SIGNING, IN-ROAD LIGHTING AND RELATED MARKINGS AND SIGNING, GREEN BIKE LANES, FLEXIBLE DELINEATORS, DECORATIVE SIGNS AND DECORATIVE SIGN POSTS, PLANTERS, ON-SITE PAVEMENT MARKINGS AND SIGNING, OFF-SITE PAVEMENT MARKINGS AND SIGNING IN RIGHT-OT-WAY THAT IS NOT DEDICATED TOR PUBLIC USE, SIDEWALK WORK AND ASPHALT WORK.

Always call 811 two full business days before you dig to have underground utilities located and marked.

Sunshine811.com

BTE REF DATE: 6-18-2026

#	DATE	REVISIONS

STEPHEN F. BOTEK
LICENSE
No. 55335
STATE OF FLORIDA
PROFESSIONAL ENGINEER

June 18, 2026

THIS DOCUMENT HAS BEEN DIGITALLY SIGNED AND SEALED BY STEPHEN F. BOTEK, P.E. ON THE DATE ADJACENT TO THE SEAL.

PRINTED COPIES OF THIS DOCUMENT ARE NOT CONSIDERED SIGNED AND SEALED AND THE SIGNATURE MUST BE VERIFIED ON ANY ELECTRONIC COPIES.

PAVEMENT MARKING AND SIGNAGE PLAN

EMERALD HILLS
Site E - Clubhouse
Hollywood, Florida

Botek Thurlow Engineering, Inc.
3409 NW 9th Avenue, Suite 102, Ft. Lauderdale, FL 33309
www.botekthurlow-eng.com p: 954-568-0888 f: 954-568-0757

BTE PROJECT #: 22-0401

PROJECT DATE: 6-5-2024

SHEET #: CE-PMS-1

REFER TO SHEET CE-PMS-1 FOR PAVEMENT MARKING AND SIGNAGE NOTES

KEY MAP (SITE E)

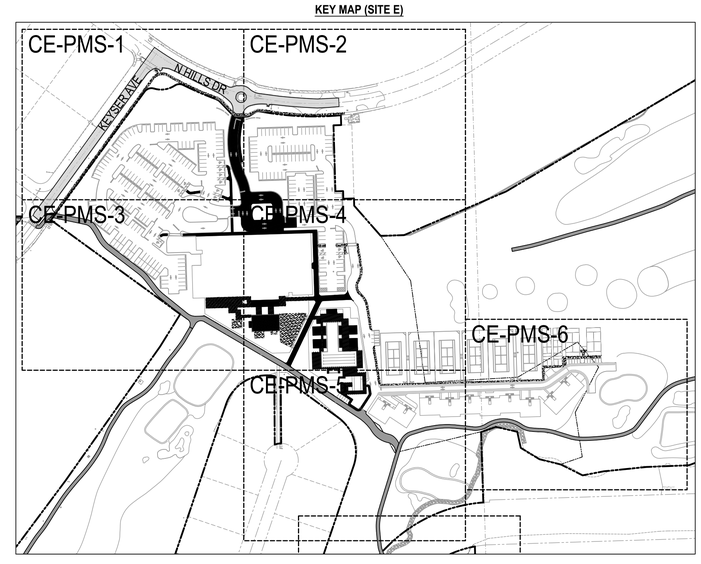

0 10 20 40 60

GRAPHIC SCALE IN FEET

Always call 811 two full business days before you dig to have underground utilities located and marked.

Sunshine811.com

BTE REF DATE: 6-18-2026

#	DATE	REVISIONS

STEPHEN F. BOTEK
LICENSE
No. 55335
STATE OF FLORIDA
PROFESSIONAL ENGINEER

June 18, 2026

THIS DOCUMENT HAS BEEN DIGITALLY SIGNED AND SEALED BY STEPHEN F. BOTEK, P.E. ON THE DATE ADJACENT TO THE SEAL.

PRINTED COPIES OF THIS DOCUMENT ARE NOT CONSIDERED SIGNED AND SEALED AND THE SIGNATURE MUST BE VERIFIED ON ANY ELECTRONIC COPIES.

PAVEMENT MARKING AND SIGNAGE PLAN

EMERALD HILLS
Site E - Clubhouse
Hollywood, Florida

Botek Thurlow Engineering, Inc.
3409 NW 9th Avenue, Suite 102, Ft. Lauderdale, FL 33309
www.botekthurlow-eng.com p: 954-568-0888 f: 954-568-0757

BTE PROJECT #: 22-0401

PROJECT DATE: 6-5-2024

SHEET #: CE-PMS-2

MATCHLINE - SEE SHEET CE-PMS-1

REFER TO SHEET CE-PMS-1 FOR PAVEMENT MARKING AND SIGNAGE NOTES

EXIST. STOP SIGN

EXIST. STOP BAR AND STOP SIGN - ALL PAVEMENT MARKINGS OUTSIDE THE MILLING AND RESURFACING LIMIT ARE TO REMAIN UNLESS NOTED OTHERWISE (TYP.)

ALL PAVEMENT MARKINGS (ADJACENT TO THE SITE) REMOVED DURING MILLING AND RESURFACING SHALL BE REPLACED PER CITY OF HOLLYWOOD AND BROWARD COUNTY STANDARDS (REFER TO OFFSITE PMS PLANS)

20.0'

PROP. "GOLF CARTS YIELD TO PEDESTRIANS" SIGN

LIMIT OF MILLING AND RESURFACING (TYP.)

PROP. CART CROSSING MARKINGS AND SIGNAGE PROPOSED BY EMERALD HILLS GOLF COURSE PROJECT (SHOWN FOR REFERENCE)

EXIST. EDGE OF PAV.

TRAFFIC DIRECTIONAL ARROWS SHOWN FOR REFERENCE ONLY (TYP.)

19.00' (TYP.)

9.00' (TYP.)

PROP. 4" SOLID WHITE (TYP.)

PROPOSED 24" WHITE STOP BAR WITH R1-1 STOP SIGN (36"x36") PER BROWARD COUNTY STANDARD DETAILS

PROP. 12" WHITE CROSSWALK MARKINGS

PROPOSED 24" WHITE STOP BAR WITH R1-1 STOP SIGN (36"x36") PER BROWARD COUNTY STANDARD DETAILS

PROPOSED 24" WHITE STOP BAR WITH R1-1 STOP SIGN (36"x36") PER BROWARD COUNTY STANDARD DETAILS

PROPOSED 24" WHITE STOP BAR WITH R1-1 STOP SIGN (36"x36") PER BROWARD COUNTY STANDARD DETAILS

PROP. 12" WHITE CROSSWALK MARKINGS

PROPOSED BUILDING (SITE E)

PROP. 4" SOLID WHITE (TYP.)

EXIST. PROPERTY LINE

19.00' (TYP.)

9.00' (TYP.)

PROP. 4" SOLID WHITE (TYP.)

MATCHLINE - SEE SHEET CE-PMS-4

PROP. PROJECT PARCEL LINE

CART PATH PROPOSED BY EMERALD HILLS GOLF COURSE REDEVELOPMENT PROJECT (SHOWN FOR REFERENCE)

KEY MAP (SITE E)

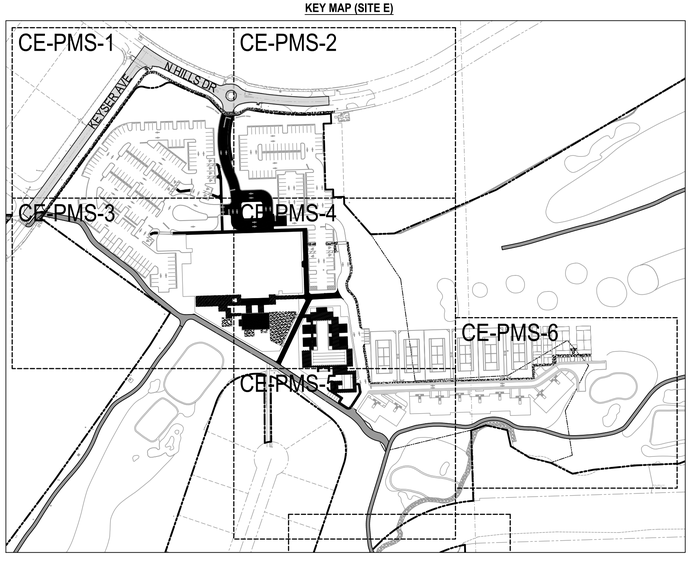

0 10 20 40 60

GRAPHIC SCALE IN FEET

Always call 811 two full business days before you dig to have underground utilities located and marked.

Sunshine811.com

MATCHLINE - SEE SHEET CE-PMS-5

BTE REF DATE: 6-18-2026

#	DATE	REVISIONS

STEPHEN F. BOTEK
LICENSE No. 55335
STATE OF FLORIDA
PROFESSIONAL ENGINEER

June 18, 2026

THIS DOCUMENT HAS BEEN DIGITALLY SIGNED AND SEALED BY STEPHEN F. BOTEK, P.E. ON THE DATE ADJACENT TO THE SEAL.

PRINTED COPIES OF THIS DOCUMENT ARE NOT CONSIDERED SIGNED AND SEALED AND THE SIGNATURE MUST BE VERIFIED ON ANY ELECTRONIC COPIES.

PAVEMENT MARKING AND SIGNAGE PLAN

EMERALD HILLS
Site E - Clubhouse
Hollywood, Florida

Botek Thurlow Engineering, Inc.
3409 NW 9th Avenue, Suite 102, Ft. Lauderdale, FL 33309
www.botekthurlow-eng.com p: 954-568-0888 f: 954-568-0757

BTE PROJECT #: 22-0401

PROJECT DATE: 6-5-2024

SHEET #: CE-PMS-3

MATCHLINE - SEE SHEET CE-PMS-2

REFER TO SHEET CE-PMS-1 FOR PAVEMENT MARKING AND SIGNAGE NOTES

MATCHLINE - SEE SHEET CE-PMS-3

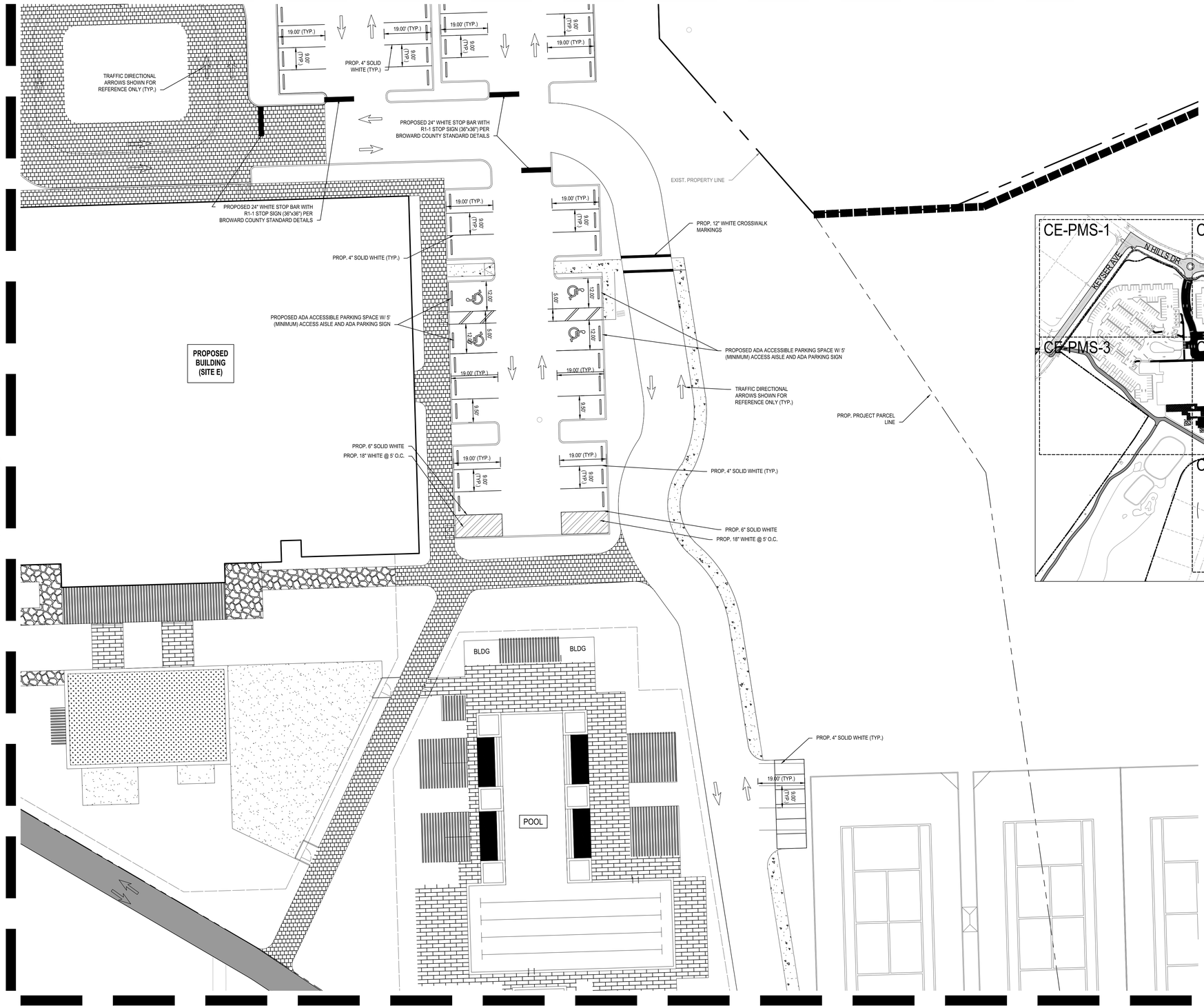

MATCHLINE - SEE SHEET CE-PMS-6

KEY MAP (SITE E)

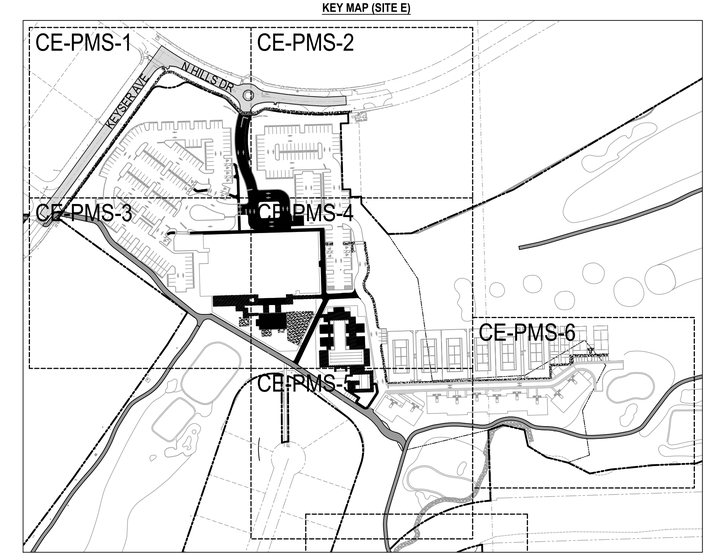

0 10 20 40 60

GRAPHIC SCALE IN FEET

Always call 811 two full business days before you dig to have underground utilities located and marked.

Sunshine811.com

BTE REF DATE: 6-18-2026

#	DATE	REVISIONS

STEPHEN F. BOTEK
LICENSE No. 55335
STATE OF FLORIDA
PROFESSIONAL ENGINEER

June 18, 2026

THIS DOCUMENT HAS BEEN DIGITALLY SIGNED AND SEALED BY STEPHEN F. BOTEK, P.E. ON THE DATE ADJACENT TO THE SEAL.

PRINTED COPIES OF THIS DOCUMENT ARE NOT CONSIDERED SIGNED AND SEALED AND THE SIGNATURE MUST BE VERIFIED ON ANY ELECTRONIC COPIES.

PAVEMENT MARKING AND SIGNAGE PLAN

EMERALD HILLS
Site E - Clubhouse
Hollywood, Florida

Botek Thurlow Engineering, Inc.
3409 NW 9th Avenue, Suite 102, Ft. Lauderdale, FL 33309
www.botekthurlow-eng.com p: 954-568-0888 f: 954-568-0757

BTE PROJECT #: 22-0401

PROJECT DATE: 6-5-2024

SHEET #: CE-PMS-4

MATCHLINE - SEE SHEET CE-PMS-4

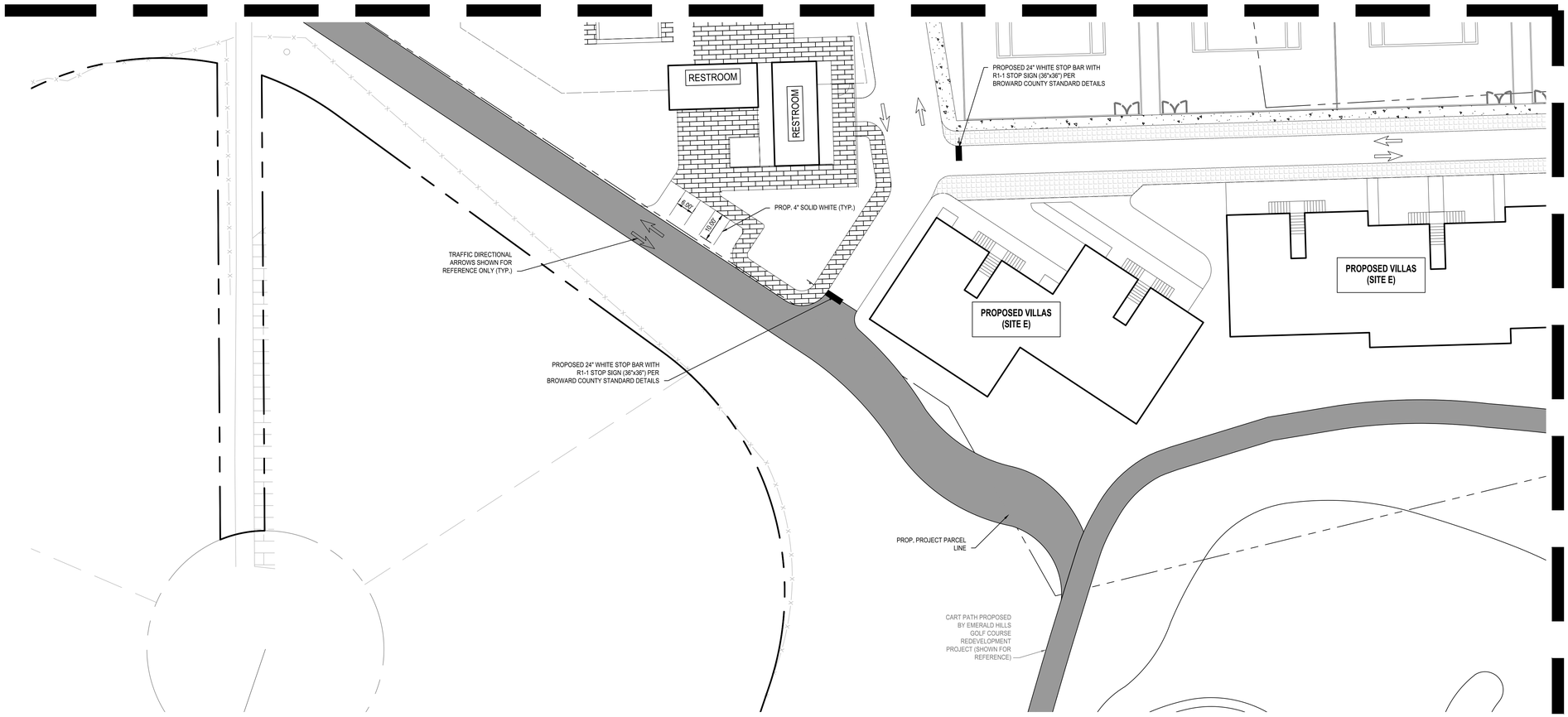

MATCHLINE - SEE SHEET CE-PMS-6

REFER TO SHEET CE-PMS-1 FOR PAVEMENT MARKING AND SIGNAGE NOTES

KEY MAP (SITE E)

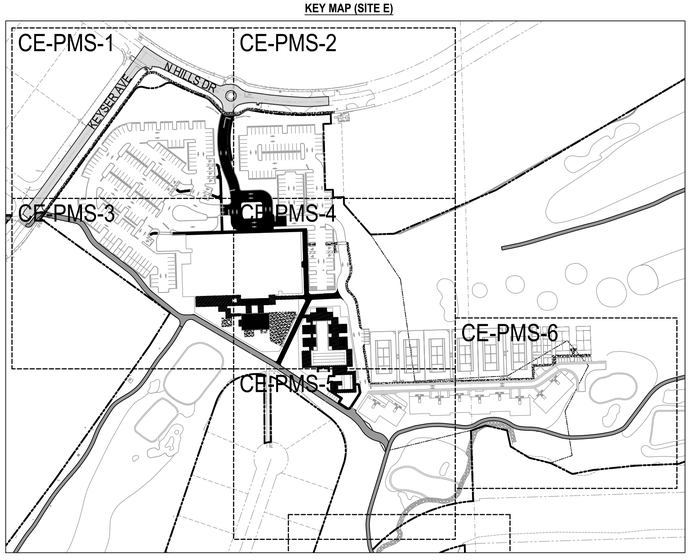

0 10 20 40 60

GRAPHIC SCALE IN FEET

Always call 811 two full business days before you dig to have underground utilities located and marked.

Sunshine811.com

BTE REF DATE: 6-18-2026

#	DATE	REVISIONS

STEPHEN F. BOTEK LICENSE No. 55335 STATE OF FLORIDA PROFESSIONAL ENGINEER

June 18, 2026

THIS DOCUMENT HAS BEEN DIGITALLY SIGNED AND SEALED BY STEPHEN F. BOTEK, P.E. ON THE DATE ADJACENT TO THE SEAL.

PRINTED COPIES OF THIS DOCUMENT ARE NOT CONSIDERED SIGNED AND SEALED AND THE SIGNATURE MUST BE VERIFIED ON ANY ELECTRONIC COPIES.

PAVEMENT MARKING AND SIGNAGE PLAN

EMERALD HILLS

Site E - Clubhouse

Hollywood, Florida

Botek Thurlow Engineering, Inc.

3400 NW 9th Avenue, Suite 102, Ft. Lauderdale, FL 33309

www.botekthurlow-eng.com p: 954-568-0888 f: 954-568-0757

BTE PROJECT #: 22-0401

PROJECT DATE: 6-5-2024

SHEET #: CE-PMS-5

REFER TO SHEET CE-PMS-1 FOR PAVEMENT MARKING AND SIGNAGE NOTES

KEY MAP (SITE E)

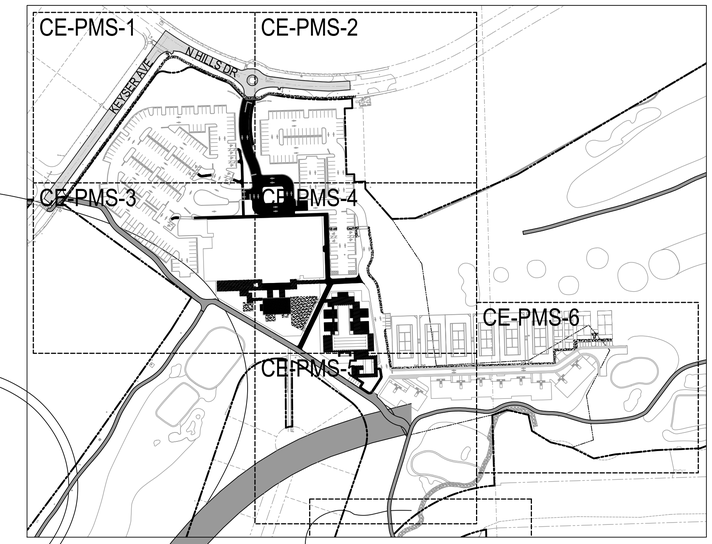

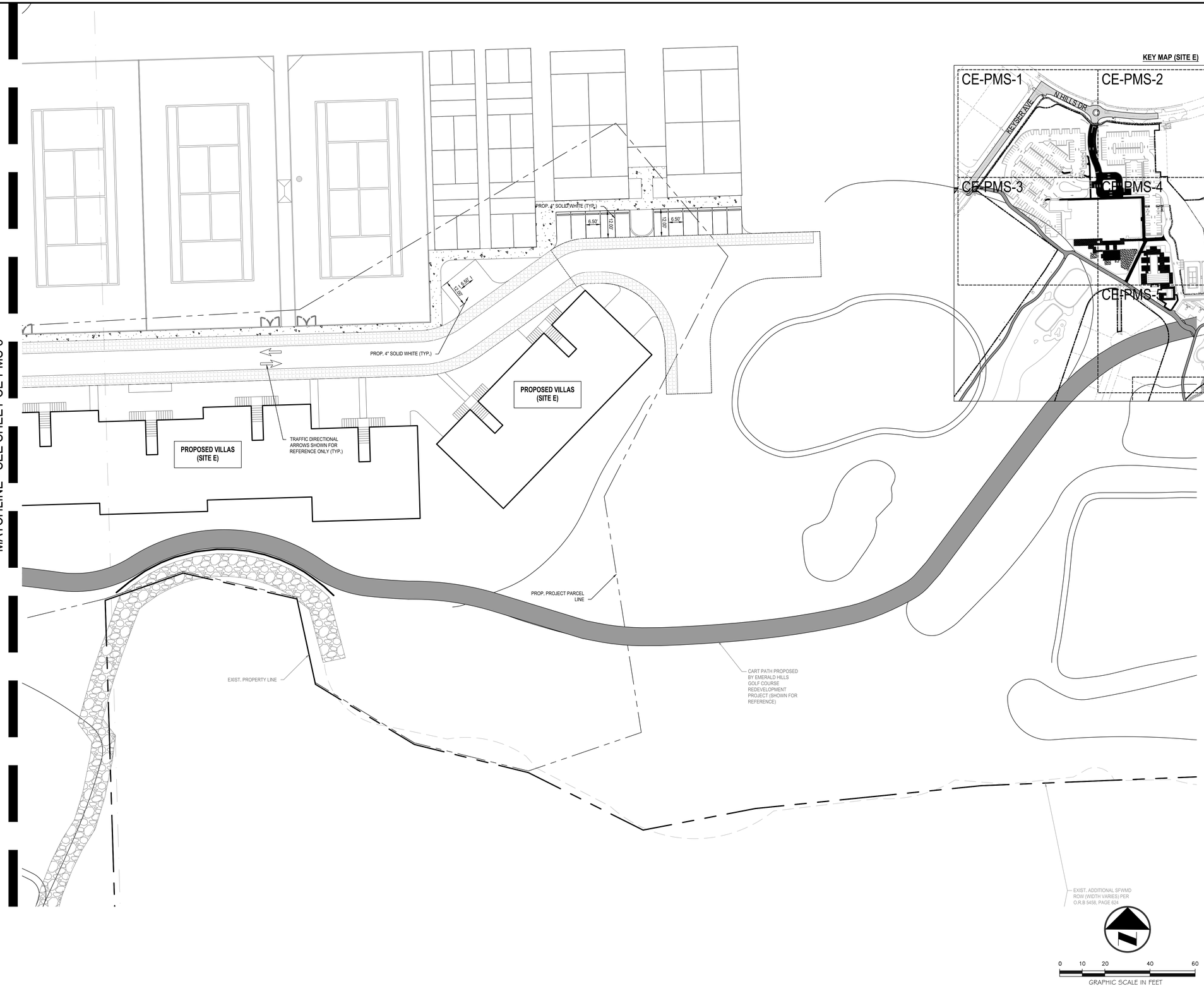

Always call 811 two full business days before you dig to have underground utilities located and marked.

Sunshine811.com

BTE REF DATE: 6-18-2026

#	DATE	REVISIONS

STEPHEN F. BOTEK
LICENSE No. 55335
STATE OF FLORIDA
PROFESSIONAL ENGINEER

June 18, 2026

THIS DOCUMENT HAS BEEN DIGITALLY SIGNED AND SEALED BY STEPHEN F. BOTEK, P.E. ON THE DATE ADJACENT TO THE SEAL.

PRINTED COPIES OF THIS DOCUMENT ARE NOT CONSIDERED SIGNED AND SEALED AND THE SIGNATURE MUST BE VERIFIED ON ANY ELECTRONIC COPIES.

PAVEMENT MARKING AND SIGNAGE PLAN

EMERALD HILLS
Site E - Clubhouse
Hollywood, Florida

Botek Thurlow Engineering, Inc.
3409 NW 9th Avenue, Suite 1102, Ft. Lauderdale, FL 33309
www.botekthurlow-eng.com p: 954-568-0888 f: 954-568-0757

BTE PROJECT #: 22-0401

PROJECT DATE: 6-5-2024

SHEET #: CE-PMS-6

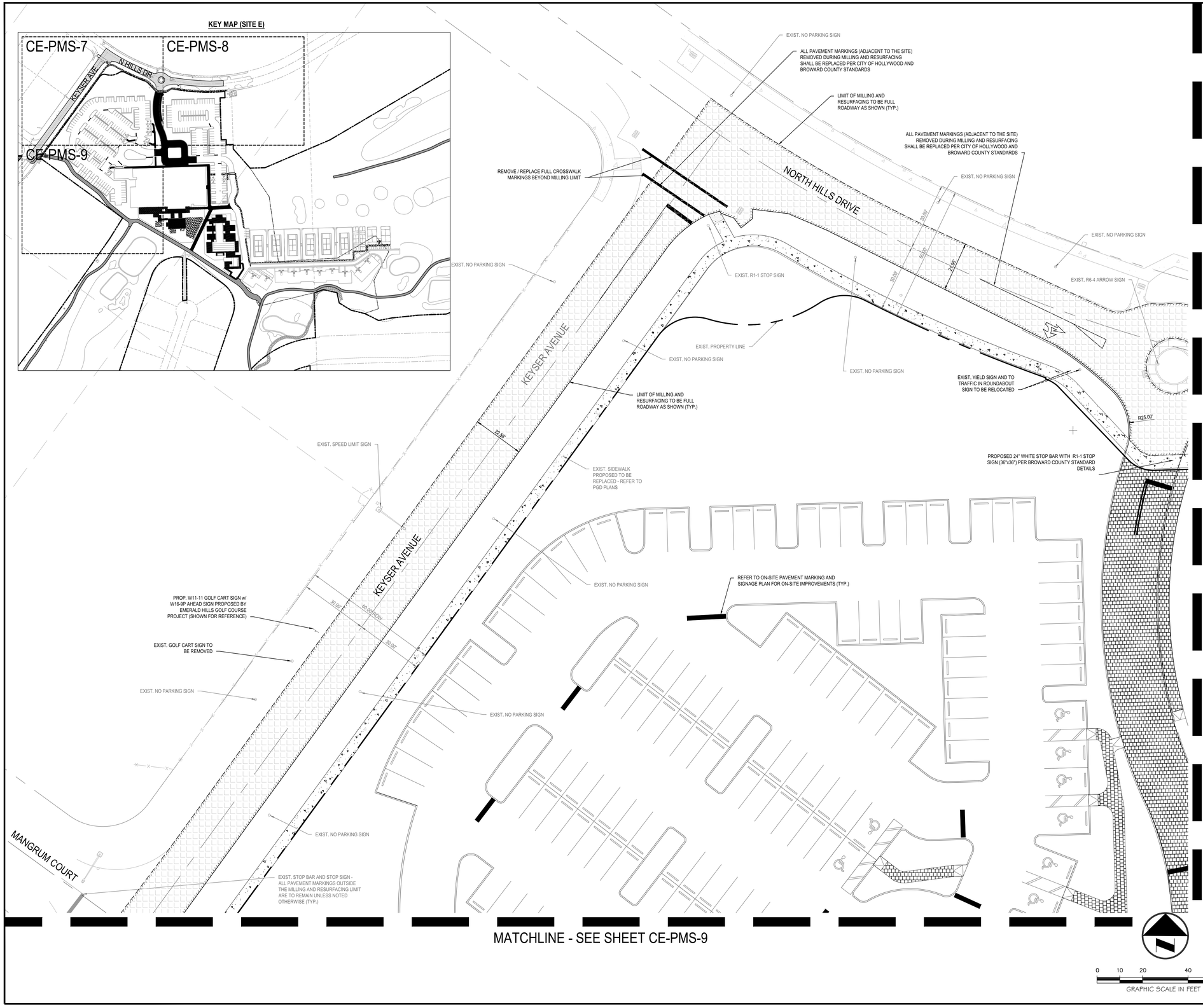

PAVEMENT MARKING & SIGNAGE NOTES:

1. ALL PAVEMENT MARKING & SIGNAGE TO BE IN ACCORDANCE WITH THE "MANUAL OF UNIFORM TRAFFIC CONTROL DEVICES" (MUTCD) (LATEST EDITION), FDOT STANDARDS (LATEST EDITION), AND BROWARD COUNTY HIGHWAY CONSTRUCTION AND ENGINEERING DIVISION STANDARDS (LATEST EDITION).
2. ALL PAVEMENT MARKINGS IN OR ADJACENT TO THE PUBLIC RIGHT OF WAY ARE TO BE ALKYD BASED THERMOPLASTIC AND FULLY RETROREFLECTORIZED.
3. PAVEMENT MARKING SHALL BE UNIFORM ACROSS THE ENTIRE STRIPE AND HAVE A MINIMUM RETRO-REFLECTIVITY OF 250 MILLICANDELAS FOR WHITE AND 175 FOR YELLOW PER BCTED MOST CURRENT STANDARDS.
4. ALL PAVEMENT MARKINGS ON PAVER SYSTEMS SHALL BE 3M 380/381 SERIES TAPE AND APPLIED WITH P60 ADHESIVE AS PER MANUFACTURER'S SPECIFICATIONS.
5. FDOT APPROVED SEALER SHALL BE USED WHEN APPLYING MARKINGS ON CONCRETE.
6. EXISTING MARKINGS SHALL BE REMOVED BY SANDBLASTING ONLY.
7. ALL REGULATORY SIGNS SHALL BE TYPE XI SHEETING MATERIAL.
8. SEE FDOT INDEX NO. 706 FOR PLACEMENT OF RPM's. (FOR BULLNOSE RPM TREATMENT, SEE LEGEND NO. 1)
9. RPM's SHALL BE CLASS "B" 911 OR EQUIVALENT, APPLIED WITH EPOXY OR BITUMINOUS ADHESIVE.
10. ALL STOP BARS TO BE 4' BEHIND CROSSWALK OR SIDEWALK.

BCTED NOTE:

THE FOLLOWING ITEMS ARE NOT REVIEWED OR ACCEPTED BY BROWARD COUNTY:

1. BROWARD COUNTY TRAFFIC ENGINEERING DIVISION'S REVIEW DOES NOT INCLUDE A REVIEW AND ACCEPTANCE OF THE PROJECT'S DESIGN OR OPERATION. THESE ITEMS ARE TO BE REVIEWED AND APPROVED BY THE CITY ENGINEER.

2. BROWARD COUNTY TRAFFIC ENGINEERING DIVISION DOES NOT REVIEW AND APPROVE, OR INSPECT AND ACCEPT THE FOLLOWING ITEMS FOR MAINTENANCE: PAVEMENT MARKINGS ON OR ADJACENT TO PAVER BRICKS, PAINTED ASPHALT, STAMPED ASPHALT OR PAVEMENT MARKINGS MADE OF PAVER BRICKS, RAISED INTERSECTIONS AND RELATED MARKINGS AND SIGNING, UN-WARRANTED MID-BLOCK CROSSWALKS AND RELATED MARKINGS AND SIGNING, UN-WARRANTED CROSSWALKS AND RELATED MARKINGS AND SIGNING, PAINTED/DECORATIVE CROSSWALKS, RAISED CROSSWALKS AND RELATED MARKINGS AND SIGNING, BLINKER SIGNS, RECTANGULAR RAPID FLASHER BEACONS AND RELATED MARKINGS AND SIGNING, ON-STREET PARKING AND RELATED MARKINGS AND SIGNING, IN-ROAD LIGHTING AND RELATED MARKINGS AND SIGNING, GREEN BIKE LANES, FLEXIBLE DELINEATORS, DECORATIVE SIGNS AND DECORATIVE SIGN POSTS, PLANTERS, ON-SITE PAVEMENT MARKINGS AND SIGNING, OFF-SITE PAVEMENT MARKINGS AND SIGNING IN RIGHT-OF-WAY THAT IS NOT DEDICATED FOR PUBLIC USE, SIDEWALK WORK OR ASPHALT WORK.

3. THE CITY ENGINEER IS RESPONSIBLE FOR THE REVIEW AND APPROVAL OF THE DESIGN AND OPERATION OF THE PROJECT, AND FOR THE INSPECTION AND ACCEPTANCE OF THE FOLLOWING ITEMS THAT WILL BE MAINTAINED BY THE CITY: PAVEMENT MARKINGS ON OR ADJACENT TO PAVER BRICKS, PAINTED ASPHALT, STAMPED ASPHALT OR PAVEMENT MARKINGS MADE OF PAVER BRICKS, PAVEMENT MARKINGS ON OR ADJACENT TO PAINTED ASPHALT, RAISED INTERSECTIONS AND RELATED MARKINGS AND SIGNING, UN-WARRANTED MID-BLOCK CROSSWALKS AND RELATED MARKINGS AND SIGNING, UN-WARRANTED CROSSWALKS AND RELATED MARKINGS AND SIGNING, PAINTED/DECORATIVE CROSSWALKS, RAISED CROSSWALKS AND RELATED MARKINGS AND SIGNING, BLINKER SIGNS,RECTANGULAR RAPID FLASHER BEACONS AND RELATED MARKINGS AND SIGNING, ON-STREET PARKING AND RELATED MARKINGS AND SIGNING, IN-ROAD LIGHTING AND RELATED MARKINGS AND SIGNING, GREEN BIKE LANES, FLEXIBLE DELINEATORS, DECORATIVE SIGNS AND DECORATIVE SIGN POSTS, PLANTERS, ON-SITE PAVEMENT MARKINGS AND SIGNING, OFF-SITE PAVEMENT MARKINGS AND SIGNING IN RIGHT-OT-WAY THAT IS NOT DEDICATED TOR PUBLIC USE, SIDEWALK WORK AND ASPHALT WORK.

Always call 811 two full business days before you dig to have underground utilities located and marked.

Sunshine811.com

BTE REF DATE: 6-18-2026

#	DATE	REVISIONS

STEPHEN F. BOTEK
LICENSE
No. 55335
STATE OF FLORIDA
PROFESSIONAL ENGINEER

June 18, 2026

THIS DOCUMENT HAS BEEN DIGITALLY SIGNED AND SEALED BY STEPHEN F. BOTEK, P.E. ON THE DATE ADJACENT TO THE SEAL.

PRINTED COPIES OF THIS DOCUMENT ARE NOT CONSIDERED SIGNED AND SEALED AND THE SIGNATURE MUST BE VERIFIED ON ANY ELECTRONIC COPIES.

OFFSITE PAVEMENT MARKING AND SIGNAGE PLAN

EMERALD HILLS
Site E - Clubhouse
Hollywood, Florida

Botek Thurlow Engineering, Inc.
3409 NW 9th Avenue, Suite 102, Ft. Lauderdale, FL 33309
www.botekthurlow-eng.com p: 954-568-0888 f: 954-568-0757

BTE PROJECT #: 22-0401

PROJECT DATE: 6-5-2024

SHEET #: CE-PMS-7

REFER TO SHEET CE-PMS-1 FOR PAVEMENT MARKING AND SIGNAGE NOTES

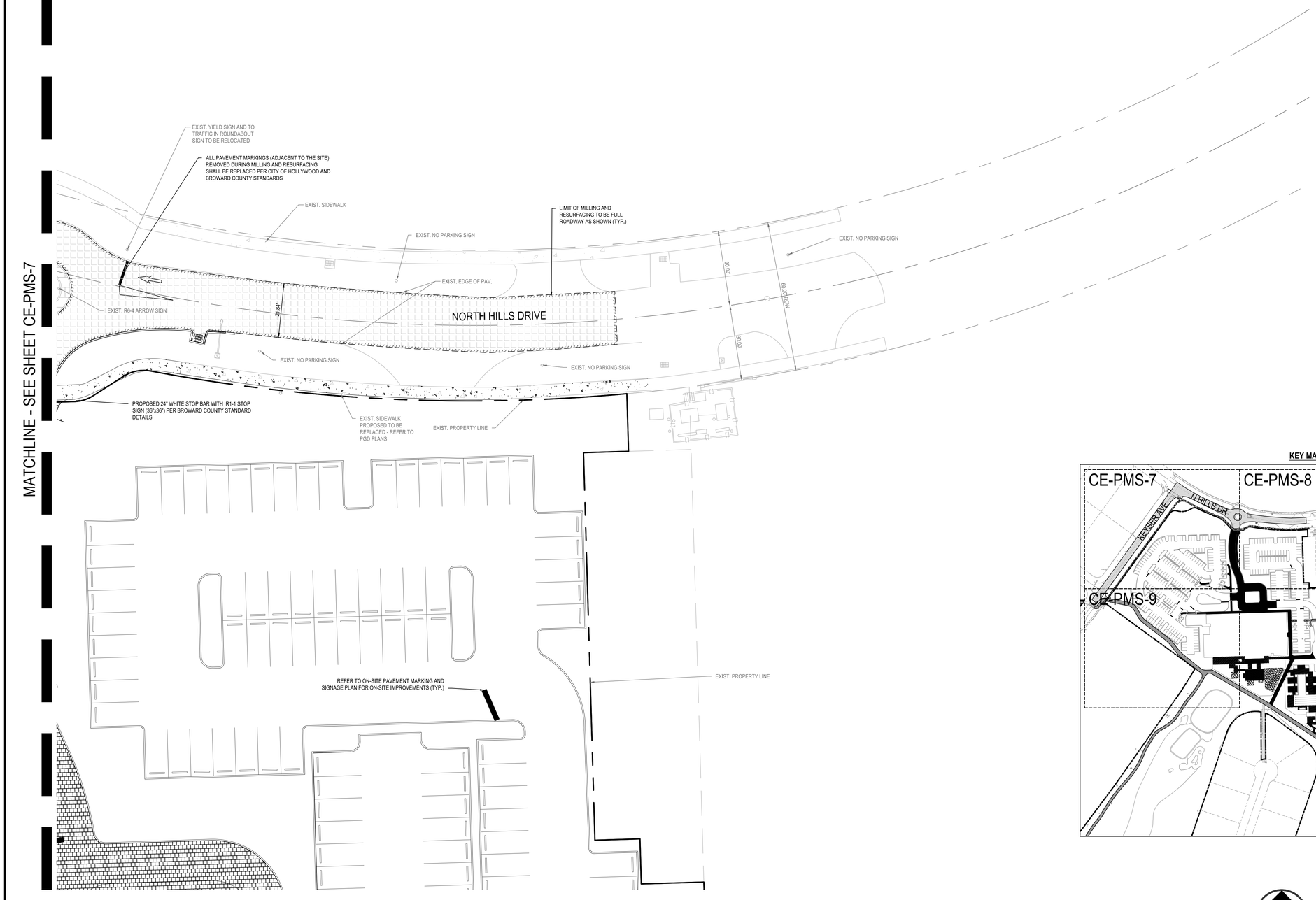

KEY MAP (SITE E)

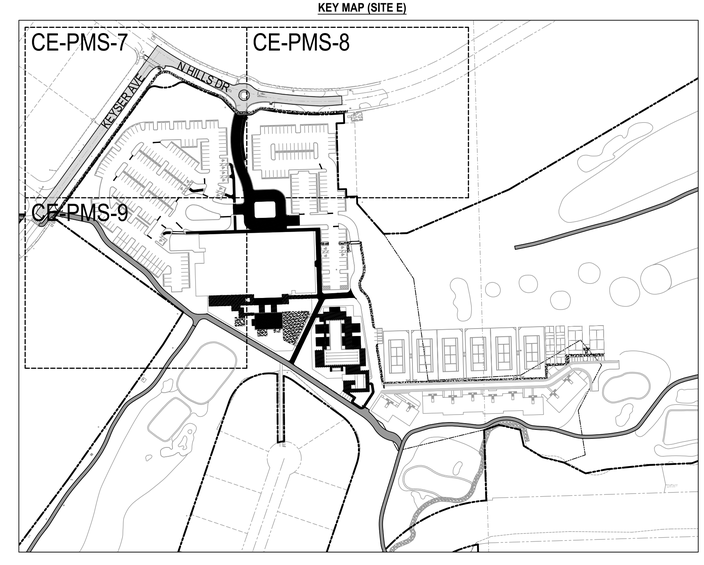

0 10 20 40 60
GRAPHIC SCALE IN FEET

Always call 811 two full business days before you dig to have underground utilities located and marked.

Sunshine811.com

BTE REF DATE: 6-18-2026

#	DATE	REVISIONS

STEPHEN F. BOTEK
LICENSE
No. 55335
STATE OF FLORIDA
PROFESSIONAL ENGINEER

June 18, 2026

THIS DOCUMENT HAS BEEN DIGITALLY SIGNED AND SEALED BY STEPHEN F. BOTEK, P.E. ON THE DATE ADJACENT TO THE SEAL.

PRINTED COPIES OF THIS DOCUMENT ARE NOT CONSIDERED SIGNED AND SEALED AND THE SIGNATURE MUST BE VERIFIED ON ANY ELECTRONIC COPIES.

OFFSITE PAVEMENT MARKING AND SIGNAGE PLAN

EMERALD HILLS
Site E - Clubhouse
Hollywood, Florida

Botek Thurlow Engineering, Inc.
3409 NW 9th Avenue, Suite 1102, Ft. Lauderdale, FL 33309
www.botekthurlow-eng.com p: 954-568-0888 F: 954-568-0757

BTE PROJECT #: 22-0401

PROJECT DATE: 6-5-2024

SHEET #: CE-PMS-8

MATCHLINE - SEE SHEET CE-PMS-7

REFER TO SHEET CE-PMS-1 FOR PAVEMENT MARKING AND SIGNAGE NOTES

EXIST. STOP SIGN

EXIST. STOP BAR AND STOP SIGN - ALL PAVEMENT MARKINGS OUTSIDE THE MILLING AND RESURFACING LIMIT ARE TO REMAIN UNLESS NOTED OTHERWISE (TYP.)

ALL PAVEMENT MARKINGS (ADJACENT TO THE SITE) REMOVED DURING MILLING AND RESURFACING SHALL BE REPLACED PER CITY OF HOLLYWOOD AND BROWARD COUNTY STANDARDS

REFER TO ON-SITE PAVEMENT MARKING AND SIGNAGE PLAN FOR ON-SITE IMPROVEMENTS (TYP.)

20.0'

LIMIT OF MILLING AND RESURFACING TO BE FULL ROADWAY AS SHOWN (TYP.)

PROP. CART CROSSING MARKINGS AND SIGNAGE PROPOSED BY EMERALD HILLS GOLF COURSE PROJECT (SHOWN FOR REFERENCE)

EXIST. EDGE OF PAV.

PROP. 4" SOLID WHITE (TYP.)

REFER TO ON-SITE PAVEMENT MARKING AND SIGNAGE PLAN FOR ON-SITE IMPROVEMENTS (TYP.)

PROP. 4" SOLID WHITE (TYP.)

EXIST. PROPERTY LINE

PROPOSED BUILDING (SITE E)

PROP. 4" SOLID WHITE (TYP.)

SITE E PARCEL LINE

CART PATH PROPOSED BY EMERALD HILLS GOLF COURSE REDEVELOPMENT PROJECT (SHOWN FOR REFERENCE)

KEY MAP (SITE E)

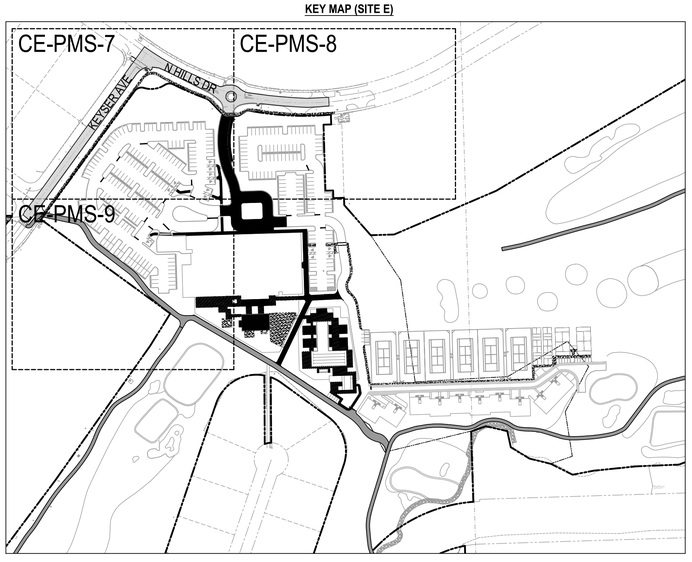

0 10 20 40 60

GRAPHIC SCALE IN FEET

Always call 811 two full business days before you dig to have underground utilities located and marked.

Sunshine811.com

BTE REF DATE: 6-18-2026

#	DATE	REVISIONS

STEPHEN F. BOTEK LICENSE No. 55335 STATE OF FLORIDA PROFESSIONAL ENGINEER

June 18, 2026

THIS DOCUMENT HAS BEEN DIGITALLY SIGNED AND SEALED BY STEPHEN F. BOTEK, P.E. ON THE DATE ADJACENT TO THE SEAL.

PRINTED COPIES OF THIS DOCUMENT ARE NOT CONSIDERED SIGNED AND SEALED AND THE SIGNATURE MUST BE VERIFIED ON ANY ELECTRONIC COPIES.

OFFSITE PAVEMENT MARKING AND SIGNAGE PLAN

EMERALD HILLS
Site E - Clubhouse
Hollywood, Florida

Botek Thurlow Engineering, Inc.
3409 NW 9th Avenue, Suite 102, Ft. Lauderdale, FL 33309
www.botekthurlow-eng.com p: 954-568-0888 f: 954-568-0757

BTE PROJECT #: 22-0401

PROJECT DATE: 6-5-2024

SHEET #: CE-PMS-9

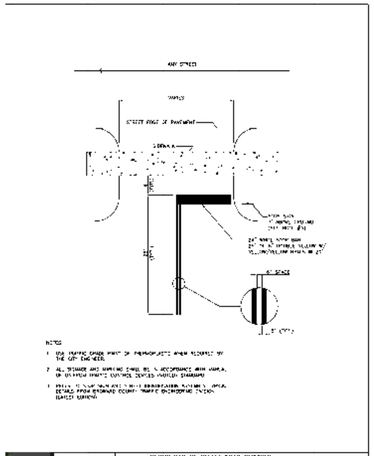

ISSUED MAY 2023	DEPARTMENT OF ENVIRONMENTAL SERVICES ENGINEERING, TRANSPORTATION & PARKS, TN DIVISION	REVISED -	
DRAWN EC	PARKING OF FIRE INSPECTOR CAR	DRAWING NO. C-20	
APPROVED JC			

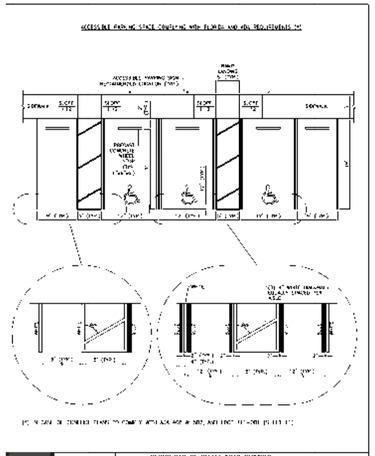

ISSUED MAY 2023	DEPARTMENT OF ENVIRONMENTAL SERVICES ENGINEERING, TRANSPORTATION & PARKS, TN DIVISION	REVISED -	
DRAWN EC	ACCESSIBLE PARKING SPACE DETAILS (1 OF 2)	DRAWING NO. C-21	
APPROVED JC			

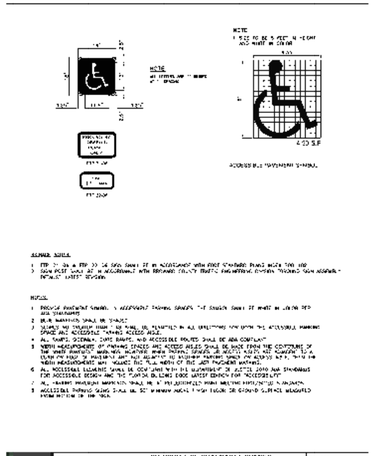

ISSUED MAY 2023	DEPARTMENT OF ENVIRONMENTAL SERVICES ENGINEERING, TRANSPORTATION & PARKS, TN DIVISION	REVISED -	
DRAWN EC	ACCESSIBLE PARKING SPACE DETAILS (2 OF 2)	DRAWING NO. C-22	
APPROVED JC			

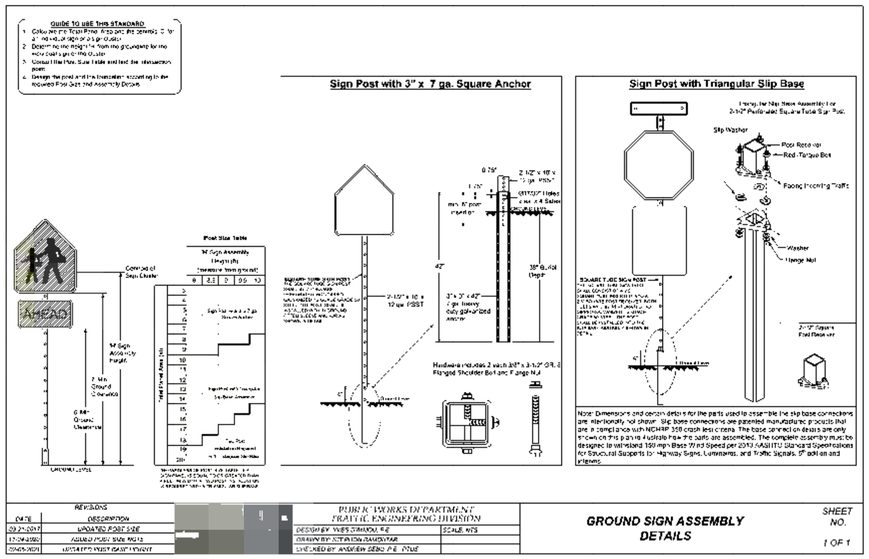

REVISIONS			
DATE	DESCRIPTION		
02-24-2017	UPDATED POST SIZE		
12-04-2020	ADDED POST SIZE NOTE		
05-05-2022	UPDATED PER BCPW REVIEW		

PUBLIC WORKS DEPARTMENT
TRAFFIC ENGINEERING DIVISION

DESIGN BY: WES SIMMONS, P.E. — SCALE: NTS
DRAWN BY: STEPHEN RAMOUTAR
CHECKED BY: ANDREW SEBO, P.E. — DATE

GROUND SIGN ASSEMBLY DETAILS

SHEET NO. 1 OF 1

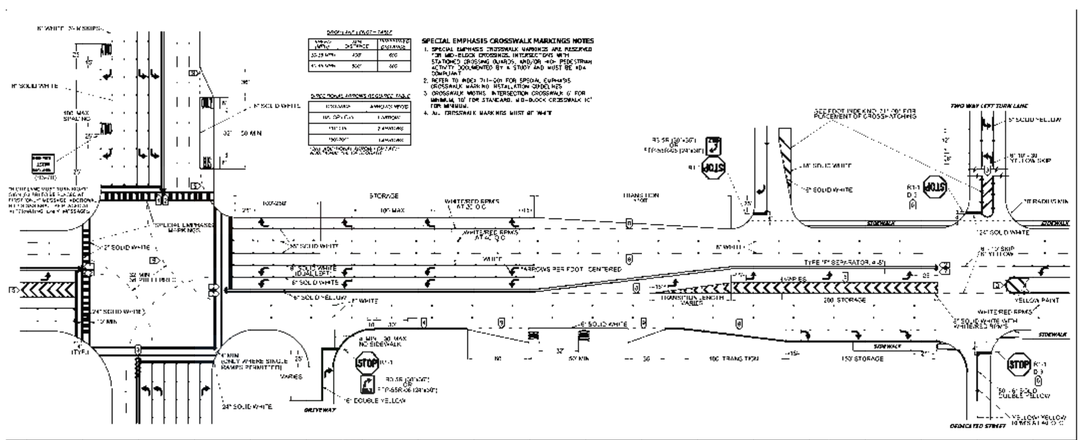

NOTES

1. ALL PAVEMENT MARKINGS SHALL BE ALKYD BASED THERMOPLASTIC AND FULLY RETROREFLECTORIZED.
2. ALL PAVEMENT MARKINGS ON PAVER SYSTEMS SHALL BE 3M 380/3M SERIES TAPE OR EQUIVALENT AND APPLIED WITH THE ADHESIVE AS PER MANUFACTURER'S SPECIFICATIONS.
3. ALL PAVEMENT MARKINGS AND SIGNS SHALL BE IN ACCORDANCE WITH THE "MANUAL ON UNIFORM TRAFFIC CONTROL DEVICES", STATE STANDARDS, AND FDOT DESIGN STANDARDS.
4. SEE FDOT INDEX NO. 706-001 FOR PLACEMENT OF ARROWS (FOR PAVEMENT SEE LEGEND NO. 1).
5. RPMS SHALL BE CLASS "B" OR EQUIVALENT, APPLIED WITH EPOXY OR BITUMINOUS ADHESIVE.
6. FDOT APPROVED SEALER SHALL BE USED WHEN APPLYING MARKINGS ON CONCRETE.
7. FOR BIKE LANE DETAILS SEE FDOT INDEX NO. 711-002.
8. EXISTING MARKINGS SHALL BE REMOVED BY WATER BLASTING OR SAND BLASTING.
9. ALL STOP LINES TO BE 4' BEHIND CROSSWALK OR SIDEWALK.
10. PAVEMENT MARKING REFLECTIVITY SHALL BE UNIFORM ACROSS THE ENTIRE STRIPE AND SHALL HAVE A MINIMUM RECORDED READING OF 250 MILLICANDELAS FOR WHITE AND 175 MILLICANDELAS FOR YELLOW.
11. ALL PRODUCTS MUST BE ON FDOT'S APPROVED PRODUCTS LIST (APL).
12. RPMS SHALL NOT BE INSTALLED ADJACENT TO BIKE LANES.
13. CROSSWALK CROSSWALK MARKINGS SHALL BE INSTALLED AT ALL CROSS STREETS ON COUNTY ROADS THAT ARE FOUR LANES OR GREATER.

LEGEND

1. YELLOW/YELLOW SIN DETAILS
2. MEDIAN NOSE PAINT DETAILS
3. PAINTED MEDIAN DETAILS
4. EDGE LINE DETAILS
5. CHEVRON DETAILS - CROSSWALK AREAS AND IN FRONT OF CURB RAMPS
6. STREET NAME BLADE DETAILS
7. TYPE IX SEPARATOR DETAILS
8. 8"-24" STOP DETAILS
9. 2-4" STOP DETAILS

STOP SIGN NOTE

WHERE SIDE ROADS INTERSECT A MULTI-LANE STREET OR ROADWAY THAT HAS A SPEED LIMIT OF 45 MPH OR HIGHER, THE MINIMUM SIZE OF THE STOP SIGNS FACING THE SIDE ROAD APPROACHES, (NEW IF THE SIDE ROAD ONLY HAS ONE APPROACH LANE, SHALL BE 36"X36".

WHERE SIDE ROADS INTERSECT A MULTI-LANE, INCLUDING TURN LANES, STILL OF MEDIANS ONLY, HAS A SPEED LIMIT OF 40 MPH OR LOWER, THE MINIMUM SIZE OF THE STOP SIGN FACING THE SIDE ROAD APPROACHES SHALL BE 30"X30".

REVISIONS		
DATE	DESCRIPTION	
11-24-2020	UPDATED NOTES	
04-14-2021	UPDATED NOTES	
05-06-2022	UPDATED NOTES	

PUBLIC WORKS DEPARTMENT
TRAFFIC ENGINEERING DIVISION

DESIGN BY: CARMELO CARATOZZOLO, P.E. — SCALE: NTS
DRAWN BY: STEPHEN RAMOUTAR
CHECKED BY: CARMELO CARATOZZOLO, P.E.

PAVEMENT MARKINGS AND SIGNS DETAILS

SHEET NO. 1 OF 1

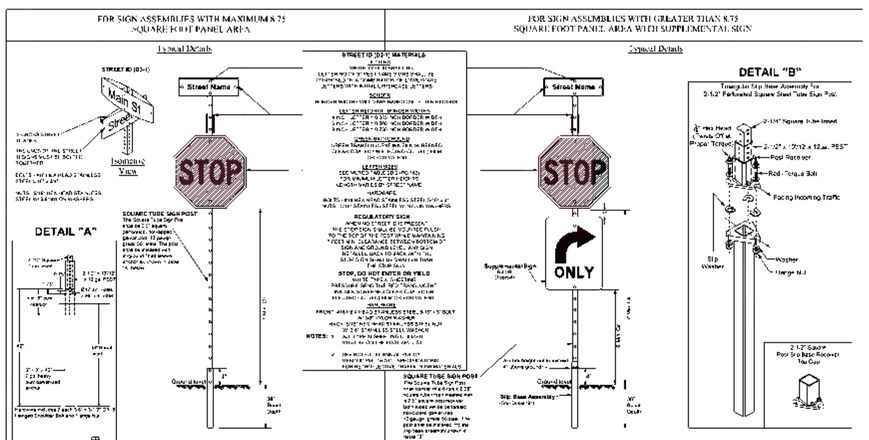

REVISIONS		
DATE	DESCRIPTION	
02-24-2017	UPDATED POST SIZE	
12-04-2020	ADDED POST SIZE NOTE	
05-05-2022	UPDATED PER BCPW REVIEW	

PUBLIC WORKS DEPARTMENT
TRAFFIC ENGINEERING DIVISION

DESIGN BY: CARMELO CARATOZZOLO, P.E. — SCALE: NTS
DRAWN BY: STEPHEN RAMOUTAR
CHECKED BY: ANDREW SEBO, P.E. — DATE

STOP SIGN AND STREET IDENTIFICATION ASSEMBLY TYPICAL DETAILS

SHEET NO. 1 OF 1

BTE REF DATE: 6-18-2026

REVISIONS

#	DATE					

STEPHEN F. BOTEK — LICENSE No. 55335 — STATE OF FLORIDA — PROFESSIONAL ENGINEER

June 18, 2026

THIS DOCUMENT HAS BEEN DIGITALLY SIGNED AND SEALED BY STEPHEN F. BOTEK, P.E. ON THE DATE ADJACENT TO THE SEAL.

PRINTED COPIES OF THIS DOCUMENT ARE NOT CONSIDERED SIGNED AND SEALED AND THE SIGNATURE MUST BE VERIFIED ON ANY ELECTRONIC COPIES.

PAVEMENT MARKING AND SIGNAGE DETAILS

EMERALD HILLS
Site E - Clubhouse
Hollywood, Florida

Botek Thurlow Engineering, Inc.
3409 NW 9th Avenue, Suite 102, Ft. Lauderdale, FL 33309
www.botekthurlow-eng.com p: 954-568-0888 F: 954-568-0757

BTE PROJECT #: 22-0401

PROJECT DATE: 6-5-2024

SHEET #: CE-PMS-10

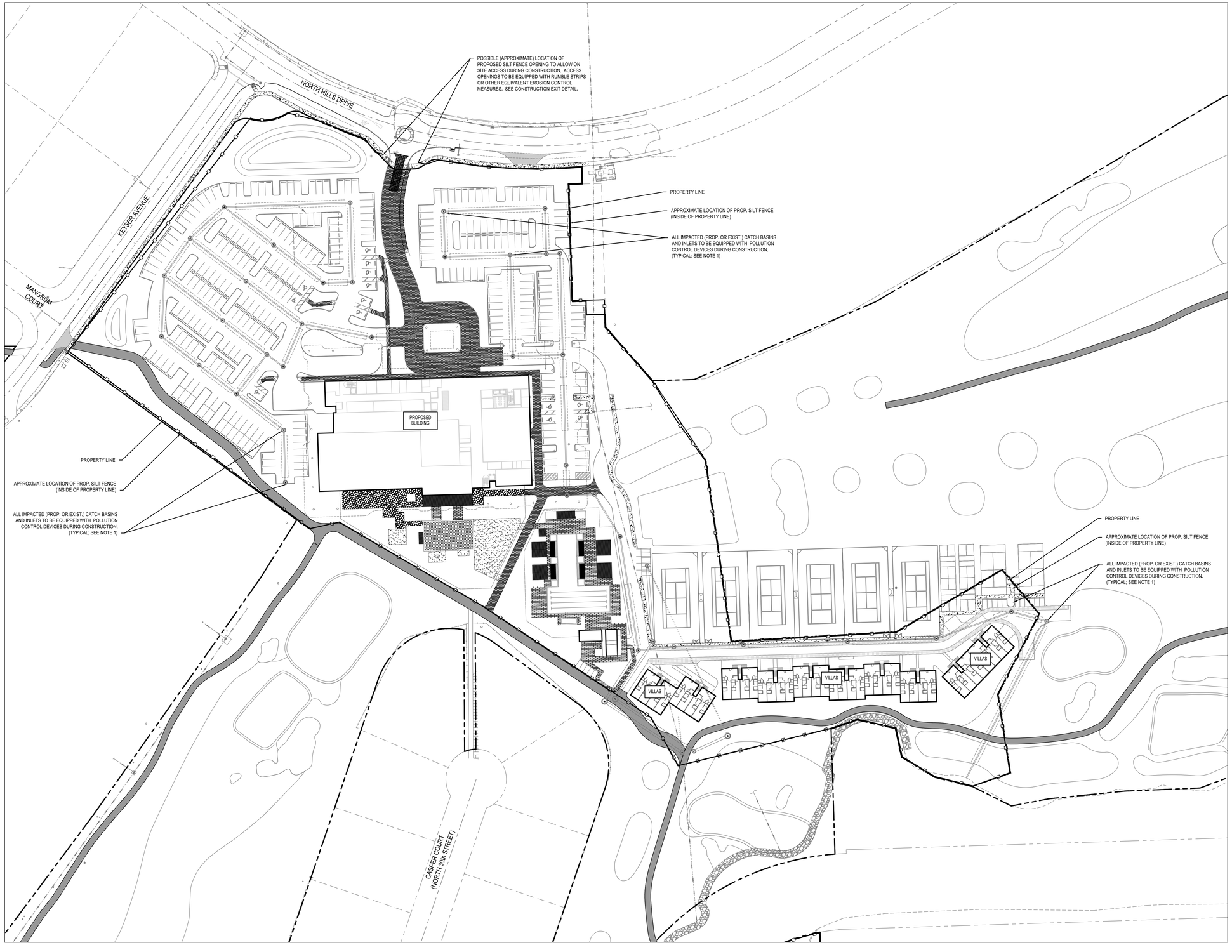

0 30 60 120 180

GRAPHIC SCALE IN FEET

Always call 811 two full business days before you dig to have underground utilities located and marked.

Sunshine811.com

BTE REF DATE: 6-18-2026

#	DATE	REVISIONS

STEPHEN F. BOTEK
LICENSE
No. 55335
STATE OF FLORIDA
PROFESSIONAL ENGINEER

June 18, 2026

THIS DOCUMENT HAS BEEN DIGITALLY SIGNED AND SEALED BY STEPHEN F. BOTEK, P.E. ON THE DATE ADJACENT TO THE SEAL.

PRINTED COPIES OF THIS DOCUMENT ARE NOT CONSIDERED SIGNED AND SEALED AND THE SIGNATURE MUST BE VERIFIED ON ANY ELECTRONIC COPIES.

POLLUTION AND EROSION CONTROL PLAN

EMERALD HILLS
Site E - Clubhouse
Hollywood, Florida

Botek Thurlow Engineering, Inc.
3409 NW 9th Avenue, Suite 102, Ft. Lauderdale, FL 33309
www.botekthurlow-eng.com p: 954-568-0888 F: 954-568-0757

BTE PROJECT #: 22-0401

PROJECT DATE: 6-5-2024

SHEET #: CE-POL-1

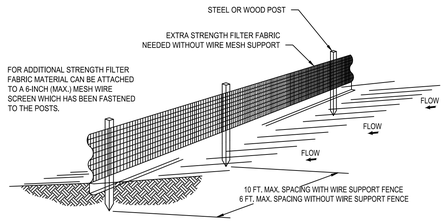

NOTES:

1. THE HEIGHT OF A SILT FENCE SHALL NOT EXCEED 36 INCHES (90 CM).
2. THE FILTER FABRIC SHALL BE PURCHASED IN A CONTINUOUS ROLL CUT TO LENGTH OF THE BARRIER TO AVOID THE USE OF JOINTS.
3. POSTS SHALL BE SPACED A MAXIMUM OF 10 FEET (3 M) APART AT THE BARRIER LOCATION AND DRIVEN SECURELY INTO THE GROUND A MINIMUM OF 12 INCHES (30 CM). WHEN EXTRA STRENGTH FABRIC IS USED WITHOUT THE WIRE SUPPORT FENCE, POST SPACING SHALL NOT EXCEED 6 FEET (1.8 M).
4. A TRENCH SHALL BE EXCAVATED APPROXIMATELY 4 INCHES (10 CM) WIDE AND 4 INCHES (10 CM) DEEP ALONG THE LINE OF POSTS AND UPSLOPE FROM THE BARRIER.
5. WHEN STANDARD STRENGTH FILTER FABRIC IS USED, A WIRE MESH SUPPORT FENCE SHALL BE FASTENED SECURELY TO THE UPSLOPE SIDE OF THE POSTS USING HEAVY DUTY WIRE STAPLES AT LEAST 1 INCH (25 MM) LONG, TIE WIRES, OR HOG RINGS. THE WIRE SHALL EXTEND INTO THE TRENCH A MINIMUM OF 2 INCHES (5 CM) AND SHALL NOT EXTEND MORE THAN 36 INCHES (90 CM) ABOVE THE ORIGINAL GROUND SURFACE.
6. THE STANDARD STRENGTH FILTER FABRIC SHALL BE STAPLED OR WIRED TO THE FENCE, AND 8 INCHES (20 CM) OF THE FILTER FABRIC SHALL BE EXTENDED INTO THE TRENCH. THE FABRIC SHALL NOT EXTEND MORE THAN 36 INCHES (90 CM) ABOVE THE ORIGINAL GROUND SURFACE.
7. THE TRENCH SHALL BE BACKFILLED AND THE SOIL COMPACTED OVER THE FILTER FABRIC.

SILT FENCE INSTALLATION DETAIL

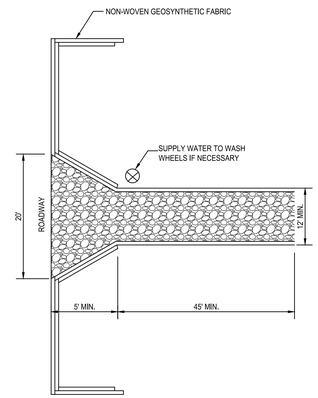

STABILIZED CONSTRUCTION EXIT

NTS

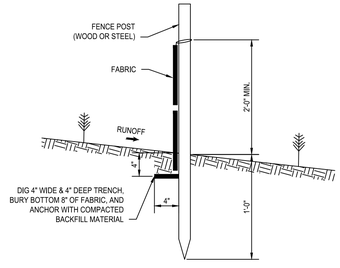

SILT FENCE SECTION

NOT TO SCALE

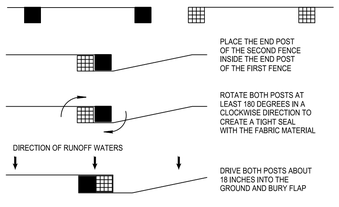

ATTACHING TWO SILT FENCES

NOT TO SCALE

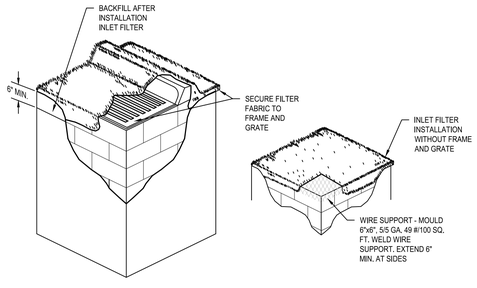

NOTES:

1. CONTRACTOR IS TO CLEAN INLET FILTER AFTER EVERY STORM.
2. CONTRACTOR TO REMOVE FABRIC JUST PRIOR TO PAVING.
3. A SEDIMENT TRAP WILL BE EXCAVATED BEHIND THE CURB AT THE INLET. THE BASIN SHALL BE AT LEAST 12 TO 14" IN DEPTH. APPROXIMATELY 36" IN WIDTH, AND APPROXIMATELY 7 TO 10 FEET IN LENGTH PARALLEL TO THE CURB.
4. STORM WATE WILL REACH THE SEDIMENT TRAP VIA CURB CUTS ADJACENT TO EACH SIDE OF THE INLET STRUCTURE. THESE OPENINGS SHALL BE AT LEAST 12 INCHES IN LENGTH. STORM WATER MAY ALSO REACH THE BASIN VIA OVERLAND FLOW LAND AREA BEHIND THE CURB. THE CUR B CUTS SHALL BE REPAIRED WHEN THE SEDIMENT TRAP IS REMOVED.

INLET FILTER DETAIL

NTS

POLLUTION CONTROL NOTES:

1. ALL DRAINAGE INLETS IMPACTED BY THIS PROJECT DURING CONSTRUCTION TO BE EQUIPPED WITH FILTER FABRIC AND/OR APPROVED EQUIVALENT OVER GRATES PER DETAIL THIS SHEET. CURB INLETS TO BE EQUIPPED WITH CURB INLET POLLUTION CONTROL DEVICES
2. SILT FENCES SHALL BE INSTALLED AS NECESSARY TO CONTROL OR PREVENT OFF-SITE DISCHARGE OF SEDIMENT.
3. ALL AREAS DISTURBED DURING CONSTRUCTION SHALL BE STABILIZED WITHIN A REASONABLE PERIOD OF TIME TO ASSURE MINIMUM EROSION OF SOILS.
4. CONTRACTOR TO COMPLY WITH TERMS AND CONDITIONS OF NATIONAL POLLUTION DISCHARGE ELIMINATION SYSTEM (NPDES) GENERAL PERMIT.
5. CONTRACTOR TO PROVIDE FOR TRUCK WASH DOWN AREA AT ALL TEMPORARY AND PERMANENT ENTRANCES/EXITS DURING CONSTRUCTION.
6. IF DEBRIS IS FOUND IN THE CITY'S STORMWATER SYSTEM PRIOR TO CONSTRUCTION, THE GENERAL CONTRACTOR SHALL INFORM THE CITY'S STORMWATER OPERATIONS DEPARTMENT FOR PROPER REMOVAL.
7. IF DEBRIS IS FOUND IN THE CITY'S STORM SYSTEMS AS A RESULT OF CONSTRUCTION ACTIVITIES, IT WILL BE THE RESPONSIBILITY OF THE CONTRACTOR TO VACUUM CLEAN THE CITY'S STORMWATER SYSTEM & PROVIDE PROOF OF ITS FINAL CONDITION TO THE CITY'S STORMWATER OPERATIONS GROUP FOR APPROVAL PRIOR TO FINAL C.O.

0 30 60 120 180

GRAPHIC SCALE IN FEET

Always call 811 two full business days before you dig to have underground utilities located and marked.

Sunshine 811.com

BTE REF DATE: 6-18-2026

#	DATE	REVISIONS

STEPHEN F. BOTEK
LICENSE
No. 55335
STATE OF FLORIDA
PROFESSIONAL ENGINEER

June 18, 2026

THIS DOCUMENT HAS BEEN DIGITALLY SIGNED AND SEALED BY STEPHEN F. BOTEK, P.E. ON THE DATE ADJACENT TO THE SEAL.

PRINTED COPIES OF THIS DOCUMENT ARE NOT CONSIDERED SIGNED AND SEALED AND THE SIGNATURE MUST BE VERIFIED ON ANY ELECTRONIC COPIES.

POLLUTION AND EROSION CONTROL DETAILS

EMERALD HILLS
Site E - Clubhouse
Hollywood, Florida

Botek Thurlow Engineering, Inc.
3409 NW 9th Avenue, Suite 1102, Ft. Lauderdale, FL 33309
www.botekthurlow-eng.com p: 954-568-0888 f: 954-568-0757

BTE PROJECT #: 22-0401

PROJECT DATE: 6-5-2024

SHEET #: CE-POL-1.1