Technical Advisory Committee

Monday, April 3, 2023
1:30 PM

City of Hollywood

Hollywood City Hall
2600 Hollywood Blvd
Hollywood, FL 33020
http://www.hollywoodfl.org

Room 215

Thank you for demonstrating an interest in the City of Hollywood Technical Advisory Committee meeting. The public may view the meeting either in person or virtually http://hollywoodfl.org/calendar and selecting the meeting's date.

Any member of the public wishing to speak on an agenda item, which calls for public comment, may do so either in person or virtually:

In-person:
On the day of the meeting a comment card shall be completely filled out. Comment cards will be available at the start of the meeting and must be received by the Committee Chair prior to the close of public comment for each item. If commenting on multiple items, a comment card shall be completed for each individual item.

Virtually:
Virtual comment is offered as a courtesy. The City is not responsible for technical difficulties that may periodically arise. Pre-registration shall be REQUIRED.

To register use the Meeting Registration and Public Comment Form. If commenting on multiple items, the form shall be completed for each individual item. The form may be found at the following link and shall be submitted by 6:00 PM the day before the meeting:

https://www.hollywoodfl.org/1248/Public-CommentRegistration-and-Submittal

Comments CANNOT be read into the record. Public comment shall be limited to three minutes speaking time maximum. Comments left on voicemail machines, emailed, posted to the City's social media accounts shall not be accepted.

Persons with disabilities who require reasonable accommodations to participate in City programs and/or services may call the Division of Engineering/Transportation & Mobility, Azita Behmardi, ADA Coordinator/City Engineer, five business days in advance at 954-921-3251 (voice). If an individual is hearing or speech impaired, please call 1-800-955-8771 (V-TDD).

For additional information or for assistance, please contact Planning and Urban Design Division, at 954-921-3471 option 3 or via email at planningdivision@hollywoodfl.org.

Persons attending meetings shall remain seated at all times unless called upon to speak, will not callout comments during the meeting or make inappropriate hand or facial gestures.

Please silence all cell phones prior to entering the meeting.

A. **Roll Call**

B. **Approval of Minutes**

Attachments: 2023_0320_Minutes.pdf

C. **Preliminary Site Plan Review**

1. 2023_0403

FILE NO.: 23-DP-33a
APPLICANT: HFL Landings Owner, LLC.
LOCATION: 3451-3690, 3210-3450, 3800 S Ocean Drive
REQUEST: Site Plan Review for a 350-unit residential development (Diplomat Landings)

Attachments: 2333a_P_Application Package_2023_0403.pdf

2. 2023_0403

FILE NO.: 23-DP-36
APPLICANT: City of Hollywood CRA
LOCATION: 1845 Hollywood Boulevard
REQUEST: Site Plan Review for a Mixed-use development with 371 residential units, approximately 7,000 sq. ft. of commercial space (Soleste La Piazza)

Attachments: 2336_P_Application Package_2023_0403_Part I.pdf
2336_P_Application Package_2023_0403_Part II.pdf

D. **Final Site Plan Review**

E. **Old Business**

F. **New Business**

G. **Adjournment**

Legal descriptions for each of the above petitions is on file in the Department of Development Services.

Two or more members of the same city board, commission, or committee, who are not of this Commission, may attend this meeting and may, at that time, discuss matters on which foreseeable action may later be taken by their board, commission or committee.

Persons with disabilities who require reasonable accommodations to participate in City programs and/or services may call the Division of Engineering/Transportation & Mobility, Azita Behmardi, ADA Coordinator/City Engineer, five business days in advance at 954-921-3251 (voice). If an individual is hearing or speech impaired, please call 1-800-955-8771 (V-TDD).

Note: Pre-Application Conceptual Overview (PACO) conference will be held immediately following conclusion of the Technical Advisory Committee (TAC). PACO is a non-sunshine conference.

City of Hollywood

Staff Summary

Hollywood City Hall
2600 Hollywood Blvd
Hollywood, FL 33020
http://www.hollywoodfl.org

Agenda Date: 4/3/2023

To: Technical Advisory Committee

Title:

SUMMARY OF THE MINUTES
TECHNICAL ADVISORY COMMITTEE MEETING

CITY OF HOLLYWOOD
2600 HOLLYWOOD BOULEVARD
HOLLYWOOD, FLORIDA 33020

A. ADMINISTRATIONS

The regular meeting of the Technical Advisory Committee (TAC) convened at 1:35 p.m. on March 20, 2023 at City Hall located at 2600 Hollywood Boulevard, Room 215, and via Cisco WebEx, with the following members present:

Andria Wingett	Development Services – Deputy Director / Planning Manager
Clarissa Ip	Development Services – Engineering
Rick Mitinger	Development Services – Engineering
Daniel Quintana	Development Services - Building
Marina Melo	Communications, Marketing, and Economic Development
Francisco Diaz-Mendez	Communications, Marketing Community Redevelopment Agency
Favio Perez	Landscape Inspector / Plans Examiner
Liliana Beltran	Housing Inspector
Marcy Hofle	Fire Rescue and Beach Safety

The following members from the Department of Development Services – Division of Planning and Urban Design were also present:

Carmen Diaz	Planning Administrator
Mawusi Watson	Planning Administrator
Laura Gomez	Associate Planner
Tasheema Lewis	Associate Planner

B. APPROVAL OF MINUTES

Motion for approval of the March 6th, 2023 Meeting Minutes was made by Rick Mitinger and seconded by Daniel Quintana.
Approved.

DRAFT

C. PRELIMINARY SITE PLAN REVIEW

1. **FILE NO.:** 23-DP-26
   APPLICANT: Aviva & Sam, LLC.
   LOCATION: 2420 Lincoln Street
   REQUEST: Site Plan Review for a 9-unit residential development

Andria Wingett asked the Applicant if they received a draft copy of the Staff Report. The Applicant responded they received a copy of the Staff Report.

The Applicant asked questions of the Committee. Discussion ensued regarding comments from the staff report. The Applicant shall address all comments and findings as identified by the Committee prior to submitting for Final TAC. Public comment was opened, Patricia Antrican and Geraldine Rosner commented. Andria Wingett closed the public comment portion.

2. **FILE NO.:** 23-DP-25
   APPLICANT: Ghasem Jafarmadar & Tida Saniei
   LOCATION: 1837-1855 Johnson Street
   REQUEST: Site Plan Review for a 14-unit residential development

Andria Wingett asked the Applicant if they received a draft copy of the Staff Report. The Applicant responded they received a copy of the Staff Report.

The Applicant asked questions of the Committee. Discussion ensued regarding comments from the staff report. The Applicant shall address all comments and findings as identified by the Committee prior to submitting for Final TAC. Public comment was opened, and no public comments were made. Andria Wingett closed the public comment portion.

3. **FILE NO.:** 23-DP-20
   APPLICANT: Air Abodes, LLC.
   LOCATION: 1914-1920 Pierce Street
   REQUEST: Site Plan Review for a 32-unit residential development

Andria Wingett asked the Applicant if they received a draft copy of the Staff Report. The Applicant responded they received a copy of the Staff Report.

The Applicant asked questions of the Committee. Discussion ensued regarding comments from the staff report. The Applicant shall address all comments and findings as identified by the Committee prior to submitting for Final TAC. Public comment was opened, and no public comments were made. Andria Wingett closed the public comment portion.

DRAFT

D. FINAL SITE PLAN REVIEW

4. FILE NO.: 23-DP-10
APPLICANT: G&T Enterprises FL, LLC.
LOCATION: 1919 Johnson Street
REQUEST: Site Plan Review for a 10-unit residential development

Andria Wingett asked the Applicant if they received a draft copy of the Staff Report. The Applicant responded they received a copy of the Staff Report.

The Applicant asked questions of the Committee. Discussion ensued regarding comments from the staff report. The Applicant shall address all comments and findings as identified by the Committee prior to submitting for Final TAC. Public comment was opened, Jack Jafarmadar commented. Andria Wingett closed the public comment portion.

5. FILE NO.: 23-DP-02
APPLICANT: 2026 Fletcher, LLC.
LOCATION: 2022-2026 Fletcher Street
REQUEST: Site Plan Review for a 42-unit residential development

Andria Wingett asked the Applicant if they received a draft copy of the Staff Report. The Applicant responded they received a copy of the Staff Report.

The Applicant asked questions of the Committee. Discussion ensued regarding comments from the staff report. The Applicant shall address all comments and findings as identified by the Committee prior to submitting for TAC Sign-off. Public comment was opened and no public comments were made. Andria Wingett closed the public comment portion.

6. FILE NO.: 23-DP-08
APPLICANT: Van Buren Flats, LLC.
LOCATION: 2202-2204 Van Buren Street
REQUEST: Site Plan Review for a 42-unit residential development

Andria Wingett asked the Applicant if they received a draft copy of the Staff Report. The Applicant responded they received a copy of the Staff Report.

The Applicant asked questions of the Committee. Discussion ensued regarding comments from the staff report. The Applicant shall address all comments and findings as identified by the Committee prior to submitting for TAC Sign-off. Public comment was opened, Helen Chervin commented. Andria Wingett closed the public comment portion.

DRAFT

7. **FILE NO.:** 22-DP-42
   APPLICANT: MMVJ Land, LLC.
   LOCATION: 2005-2007, 2011 Jackson Street
   REQUEST: Site Plan Review for a 49-unit residential development (2005-2007-2011 Jackson)

Andria Wingett asked the Applicant if they received a draft copy of the Staff Report. The Applicant responded they received a copy of the Staff Report.

The Applicant asked questions of the Committee. Discussion ensued regarding comments from the staff report. The Applicant shall address all comments and findings as identified by the Committee prior to submitting for TAC Sign-off. Public comment was opened and no public comments were made. Andria Wingett closed the public comment portion.

8. **FILE NO.:** 23-DP-09
   APPLICANT: 1735-1739 Jackson Street, LLC.
   LOCATION: 1735-1739 Jackson Street
   REQUEST: Site Plan Review for a 78-unit residential development

Andria Wingett asked the Applicant if they received a draft copy of the Staff Report. The Applicant responded they received a copy of the Staff Report.

The Applicant asked questions of the Committee. Discussion ensued regarding comments from the staff report. The Applicant shall address all comments and findings as identified by the Committee prior to submitting for TAC Sign-off. Public comment was opened and no public comments were made. Andria Wingett closed the public comment portion.

9. **FILE NO.:** 23-DP-15
   APPLICANT: 6015 Washington, LLC.
   LOCATION: 6015 Washington Street
   REQUEST: Site Plan Review for a Mixed-use development with 115 residential units and approximately 800 sq. ft. retail space (Residencies at Beverly Park)

Andria Wingett asked the Applicant if they received a draft copy of the Staff Report. The Applicant responded they received a copy of the Staff Report.

The Applicant asked questions of the Committee. Discussion ensued regarding comments from the staff report. The Applicant shall address all comments and findings as identified by the Committee prior to submitting for TAC Sign-off. Public comment was opened and no public comments were made. Andria Wingett closed the public comment portion.

E. OLD BUSINESS

-Andria Wingett Deputy Director / Planning Manager, provided a brief update on prioritizing projects.

F. NEW BUSINESS

G. ADJOURNMENT

The meeting adjourned at approximately **3:44 p.m**.

DRAFT

City of Hollywood

Staff Summary

Hollywood City Hall
2600 Hollywood Blvd
Hollywood, FL 33020
http://www.hollywoodfl.org

File Number: 1. 2023_0403

Agenda Date:	4/3/2023	**Agenda Number:**	
To:	Technical Advisory Committee		
Title:	FILE NO.: 23-DP-33a APPLICANT: HFL Landings Owner, LLC. LOCATION: 3451-3690, 3210-3450, 3800 S Ocean Drive REQUEST: Site Plan Review for a 350-unit residential development (Diplomat Landings)		

PLANNING DIVISION



2600 Hollywood Boulevard Room 315
Hollywood, FL 33022

File No. (internal use only): _____

GENERAL APPLICATION

CITY OF Hollywood FLORIDA

Tel: (954) 921-3471
Fax: (954) 921-3347

This application must be completed in full and submitted with all documents to be placed on a Board or Committee's agenda.

The applicant is responsible for obtaining the appropriate checklist for each type of application.

Applicant(s) or their authorized legal agent must be present at all Board or Committee meetings.

At least one set of the submitted plans for each application must be signed and sealed (i.e. Architect or Engineer).

Documents and forms can be accessed on the City's website at

http://www.hollywoodfl.org/DocumentCenter/Home/View/21



APPLICATION TYPE (CHECK ONE):

☒ Technical Advisory Committee ☐ Historic Preservation Board
☐ City Commission ☐ Planning and Development Board

Date of Application: 03/15/2023

Location Address: 3451-3690; 3210-3450; 3800 S Ocean Dr, Hollywood, FL 33019

Lot(s): _____ Block(s): _____ Subdivision: _____

Folio Number(s): 51-42-23-17-0030; 51-42-23-06-0030; 51-42-23-06-0020; 51-42-23-17-0040

Zoning Classification: PD Land Use Classification: Diplomat Activity Center

Existing Property Use: Commercial use and parking. Sq Ft/Number of Units: 65k commercial, and parking

Is the request the result of a violation notice? ( ) Yes (X) No If yes, attach a copy of violation.

Has this property been presented to the City before? If yes, check al that apply and provide File Number(s) and Resolution(s): ORD 0-2019-25

☐ Economic Roundtable ☒ Technical Advisory Committee ☐ Historic Preservation Board
☐ City Commission ☐ Planning and Development

Explanation of Request: Site Plan and Design Approval of 350 residential units

Number of units/rooms: 350 residential units Sq Ft: 470,000 residential

Value of Improvement: 55,000,000 Estimated Date of Completion: 2026

Will Project be Phased? ( ) Yes (X)No If Phased, Estimated Completion of Each Phase

Name of Current Property Owner: HFL LANDINGS OWNER LLC

Address of Property Owner: 55 MERCHANT STREET SUITE 1500 HONOLULU, HI 96813

Telephone: +1 646 528 4854 Fax: _____ Email Address: rdonn@trinityinvestments.com

Name of Consultant/Representative/Tenant (circle one): Rep - LANDINGS VENTURE, LLC (Eric Fordin)

Address: 2850 Tigertail Ave Telephone: 786.402.0807

Fax: _____ Email Address: eric@relatedgroup.com

Date of Purchase: 02.10.23 Is there an option to purchase the Property? Yes ( ) No (X)

If Yes, Attach Copy of the Contract.

List Anyone Else Who Should Receive Notice of the Hearing: Debbie.Orshefsky@hklaw.com, Pedro.Schnell@relatedgroup.com

Address: Pedro.gassant@hklaw.com

Email Address: wca@trippscott.com, breese@cpgcre.com

PLANNING DIVISION



2600 Hollywood Boulevard Room 315
Hollywood, FL 33022

File No. (internal use only): _____

GENERAL APPLICATION

CERTIFICATION OF COMPLIANCE WITH APPLICABLE REGULATIONS

The applicant/owner(s) signature certifies that he/she has been made aware of the criteria, regulations and guidelines applicable to the request. This information can be obtained in Room 315 of City Hall or on our website at www.hollywoodfl.org. The owner(s) further certifies that when required by applicable law, including but not limited to the City's Zoning and Land Development Regulations, they will post the site with a sign provided by the Office of Planning and Development Services. The owner(s) will photograph the sign the day of posting and submit photographs to the Office of Planning and Development Services as required by applicable law. Failure to post the sign will result in violation of State and Municipal Notification Requirements and Laws.

(I)(We) certify that (I) (we) understand and will comply with the provisions and regulations of the City's Zoning and Land Development Regulations, Design Guidelines, Design Guidelines for Historic Properties and City's Comprehensive Plan as they apply to this project. (I)(We) further certify that the above statements and drawings made on any paper or plans submitted herewith are true to the best of (my)(our) knowledge. (I)(We) understand that the application and attachments become part of the official public records of the City and are not returnable.

Signature of Current Owner: _____ Date: 3.7.23

PRINT NAME: Sean Hehir for HFL Landings Owner LLC

Signature of Consultant/Representative: _____ Date: 3/15/23

PRINT NAME: Pedro Gassant and Debbie M. Orshefsky for Holland & Knight LLP Date: _____

Signature of Tenant: _____ Date: _____

PRINT NAME: _____ Date: _____

Current Owner Power of Attorney

I am the current owner of the described real property and that I am aware of the nature and effect the request for site plan/ design approval, as described above, to my property, which is hereby made by me or I am hereby authorizing Holland & Knight, LLP to be my legal representative before the applicable committees. (Board and/or Committee) relative to all matters concerning this application.

Date: _____
Boards and City Commission

_____
Signature of Current Owner

Sean Hehir, for HFL Landings Owner LLC
Print Name

STATE OF HAWAII)
) SS.
CITY AND COUNTY OF HONOLULU)

On this 7th day of March, 2023, in the First Circuit of the State of Hawaii, before me personally appeared SEAN HEHIR, to me known to be the person described herein, being by me duly sworn or affirmed, did say that such person executed the foregoing instrument entitled GENERAL APPLICATION, comprised of 2 page(s) and dated march 7, 2023 as the free act and deed of such person, and if applicable, in the capacity (ies) shown, having been duly authorized to execute such instrument in such capacity (ies).

NOTARY PUBLIC
Comm. No. 21-50
STATE OF HAWAII

_____
Print Name: Naomi Lyon
Notary Public, State of Hawaii
My Commission Expires: 4/25/2025

Holland & Knight

701 Brickell Avenue, Suite 3300 | Miami, FL 33131 | T 305.789.7787 | F 305.679.6302
Holland & Knight LLP | www.hklaw.com

Pedro Gassant
305.789.7430
Pedro.gassant@hklaw.com

March 15, 2023

BY ELECTRONIC DELIVERY

Andria Wingett
Assistant Director
Development Services
2600 Hollywood Boulevard,
Hollywood, FL, 33021

Re: **Preliminary TAC Submission/ Diplomat Landings / Criteria Statement -- Site Plan and Design Review Criteria**

Dear Ms. Wingett:

On behalf of Landings Venture, LLC and HFL Landings Owner LLC (collectively, the "Applicants"), we are hereby submitting an application for Preliminary Technical Advisory Committee (TAC) review with the City of Hollywood (the "City"). The application relates to the approximately 4 acres of land on the west side of A1A and identified on that certain plat of the "Diplomat Resort and Country Club Plat" at Plat Book 158 Page 16 and identified as parcel C (the "Property").

This Preliminary TAC submittal concerns an application for Site Plan and Design Review (the "Application") that will implement the corresponding amendment to the PD Zoning and PD Master Plan for the Property with respect to the development of 350 luxury residential units. As part of the Application, the Applicant is providing a site plan, elevation and schematic landscape plans. As part of those plans, the Applicant is implementing the Intracoastal Broadwalk, as contemplated by Ordinance No. O-2019-24,[1] which is providing for a publicly accessible broadwalk west of the Property along the Intracoastal waterway. Furthermore, as part of the plans, the residential development includes a premiere set of amenitized facilities with an emphasis on providing residents with views of, and access to, the intracoastal waterway.

[1] There were no specific dimensions of the "Broadwalk" as contemplated during the land use approval of the Diplomat Activity Center. However, the general concept of the plan contemplated providing for an area along the Intracoastal that would be publicly accessible.

In furtherance of the adoption of the Diplomat Activity Center, the Applicants now seek a Site Plan and Design review to permit the development of 350 premiere luxury residential units. It is estimated that the 350 luxury residential units will be developed by 2026.

The Site Plan and Design Review for the Application is appropriate because it satisfies the following criteria:

1. Architectural and design components. Architecture refers to the architectural elements of exterior building surfaces. Architectural details should be commensurate with the building mass. Design of the building shall consider aesthetics and functionality, including the relationship of the pedestrian with the built environment. The design should consider architectural elements that are characteristic of the surrounding neighborhood.

   Response: The architectural details contemplated within the elevations, landscape schematics and site plan are commensurate with the building mass and contemplates a design that gives the perception of a residential southwestern extension of the existing diplomat hotel, while creating a design that ensures maximum visibility of both the intracoastal waterway and the Atlantic ocean for the residents. In addition, the design provides substantial glazing to maximize the aesthetic quality of the location.

2. Compatibility. The harmonious relationship between existing architectural language and composition and proposed construction, including how each building along the street relates to the whole and the pattern created within adjacent structures and the surrounding neighborhood, and with the established and adopted vision for the area.

   Response: The architecture for the Property promotes a harmonious relationship between the existing architectural language within the Diplomat Activity Center by developing the Property with a residential building that seemingly comprises a projection from the existing hotel. In addition, the development of the Property with the residential development is consistent with the vision adopted for the area because it is expressly consistent with the land use designation for the Property, which contemplates a 350 multifamily residential development on the site.

3. Scale/massing. Buildings shall be proportionate in scale, with a height which is consistent with the surrounding structures, and with the established and adopted vision of the area. Building geometries shall reflect a simple composition of basic architectural details in relation to its length, width, height, lot coverage, and setting of the structure in context with adjacent buildings.

   Response: The residential building will be proportionate in scale and height with the existing development within the Diplomat Activity Center. The current height for development within the Diplomat Activity Center is 457 feet and the residential development will not exceed that height.

4. Landscaping. Landscaped areas should contain a variety of native and other compatible plant types and forms, and be carefully integrated with existing buildings and paved areas. Existing mature trees and other significant plants on the site should be preserved.

   Response: The landscaped areas will contain a variety of native and other compatible plant forms that will be integrated with the residential development to ensure that the project is enveloped in lush landscaping. In addition, the landscaping for the project will further enhance the public realm by providing for world-class landscaping along the Intracoastal Broadwalk.

5. Design Guidelines Manual. A Design Guidelines Manual has been adopted which contains recommended approaches to design issues and which is incorporated herein. The Board shall only approve amendments to the Design Guidelines Manual after a public hearing has been held. Public notice requirements shall be by notice in a newspaper of general paid circulation in the City with the notice appearing at least ten days in advance of the public hearing.

   Response: The development will be consistent with the City's Urban Design Guidelines. For example, the proposed residential structure is being designed to be compatible with the existing buildings in the area and is being configured to enhance the appearance of the surrounding properties.

6. Neighborhood specific design review criteria. The Planning and Development Board is authorized to approve specific design review criteria for identified neighborhoods in the city and to apply the criteria in its review of plans for design approval. The Board shall only approve Neighborhood Specific Design Review Criteria after a public hearing has been held. Public notice requirements shall be by notice in a newspaper of general paid circulation in the city with the notice appearing at least 10 days in advance of the public hearing. This process shall also apply to amendments.

   Response: Although the residential project is not on the east side of A1A, it is still consistent with the Hollywood Beach CRA MasterPlan as it will be creating a new "Intracoastal Broadwalk" along the Intracoastal waterway. Strategy 1.1. of the Hollywood Beach CRA Master Plan contemplates the protection of the character of the Broadwalk. The residential development here incorporates a new "Intracoastal Broadwalk" that creates a new and enhanced opportunity for residents and visitors of the City to enjoy the beauty of the Intracoastal waterway.

Because the Site Plan and Design of the residential development is consistent with the above referenced criteria, we are asking for your favorable consideration of the project. We look forward to working with you and your staff to bring this excellent project to fruition. Should you have any questions or concerns, please feel free to contact me directly.

Sincerely,

Holland & Knight LLP



Pedro Gassant, Esq.

Cc: Debbie M. Orshefsky, Esq.
Eric Fordin
Pedro Schnell
Wilson C. Atkinson, Esq.

THE DIPLOMAT BEACH RESORT
DIPLOMAT LANDING
3210-3690 S. OCEAN DRIVE
HOLLYWOOD, FL 33019

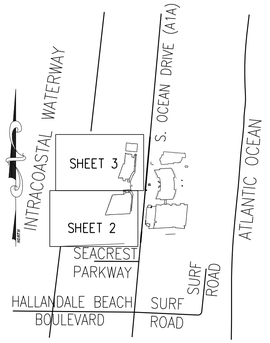

LOCATION MAP
NOT TO SCALE

REPORT OF SURVEY

1. NOT VALID WITHOUT THE SIGNATURE AND ORIGINAL RAISED SEAL OF A FLORIDA LICENSED SURVEYOR AND MAPPER.
2. LANDS SHOWN HEREON WERE ABSTRACTED BY FIDELITY NATIONAL TITLE INSURANCE COMPANY, COMMITMENT FOR TITLE INSURANCE, COMMITMENT NO. FL252109245JC, EFFECTIVE DATE OF COMMITMENT: JANUARY 27, 2022 @ 8:00 A.M.
3. UNLESS OTHERWISE NOTED, THIS FIRM HAS NOT ATTEMPTED TO LOCATE UNDERGROUND UTILITIES, FOOTINGS AND/OR FOUNDATIONS.
4. BEARINGS SHOWN HEREON ARE BASED ON THE SOUTH LINE OF PARCEL 'A' OF DIPLOMAT RESORT AND COUNTRY CLUB ACCORDING TO THE PLAT THEREOF AS RECORDED IN PLAT BOOK 158, PAGE 16, OF THE PUBLIC RECORDS OF BROWARD COUNTY, FLORIDA HAVING A BEARING OF SOUTH 87°18'02" WEST.
5. SAID SURVEYED PROPERTY IS LOCATED WITHIN AN AREA HAVING ZONE DESIGNATIONS OF AE-7', AE-9', AE-10', VE-10', VE-12', X AND X-0.2% BY THE SECRETARY OF HOUSING AND URBAN DEVELOPMENT, ON FLOOD INSURANCE RATE MAP NO. 12011C0751H, WITH A DATE OF IDENTIFICATION OF 8/18/2014, COMMUNITY NUMBER 125113 AND LETTER OF MAP REVISION (LOMR) 15-04-6825P, EFFECTIVE 9/7/16 IN BROWARD COUNTY, STATE OF FLORIDA, WHICH IS THE CURRENT FLOOD INSURANCE RATE MAP FOR THE COMMUNITY IN WHICH SAID SURVEYED PROPERTY IS SITUATED. THE SURVEY DISPLAYS THE LIMITS OF EACH ZONE AS OBTAINED DIGITALLY FROM THE FEDERAL EMERGENCY MANAGEMENT AGENCY'S WEBSITE.
6. PROPERTY ADDRESSES (SUPPLIED BY PAUL HASTINGS, LLP):
   FEE SIMPLE PARCEL: 3555 SOUTH OCEAN DRIVE, HOLLYWOOD, FLORIDA, 33019 (HOTEL)
   3555 SOUTH OCEAN DRIVE, HOLLYWOOD, FLORIDA, 33019 (CONVENTION CENTER)
   LEASE PARCELS: 3400 AND 3600 SOUTH OCEAN DRIVE, HOLLYWOOD, FLORIDA, 33019 (PARKING GARAGES)
   3460 SOUTH OCEAN DRIVE, HOLLYWOOD, FLORIDA, 33019 (BRISTOLS BURGER)
   3200-3680 SOUTH OCEAN DRIVE, HOLLYWOOD, FLORIDA, 33019 (RETAIL & RELATED FACILITIES)
7. FEE SIMPLE PARCEL CONTAINS:
   1041 REGULAR PARKING SPACES
   11 HANDICAPPED PARKING SPACES
   5 MOTORCYCLE PARKING SPACES
   2 ELECTRIC VEHICLE PARKING SPACES
   1,059 TOTAL AND ARE SHOWN HEREON AS TO THE EXTENT POSSIBLE.
   LEASEHOLD PARCEL No. 3 CONTAINS:
   1391 REGULAR PARKING SPACES
   18 HANDICAPPED PARKING SPACES
   4 MOTORCYCLE PARKING SPACES
   1,413 TOTAL TOTAL AND ARE SHOWN HEREON AS TO THE EXTENT POSSIBLE.
8. THERE WAS NO OBSERVED EVIDENCE OF: CURRENT EARTH MOVING WORK, BUILDING CONSTRUCTION OR BUILDING ADDITIONS, RECENT STREET OR SIDEWALK CONSTRUCTION OR REPAIRS, OR SITE USE AS A SOLID WASTE DUMP, SUMP, OR SANITARY LANDFILL.
9. ALL BEARINGS, DISTANCES ARE IN SUBSTANTIAL ACCORDANCE WITH THE RECORDED DOCUMENTS UNLESS OTHERWISE NOTED.
10. ZONING INFORMATION: THE PROPERTY IS ZONED PD-PLANNED UNIT DEVELOPMENT DISTRICT
    A. BUILDING SET-BACK LINES:
       INTERNAL STREETS: 25-FEET FROM ALL PUBLIC ROAD RIGHTS-OF-WAY.
       EXTERNAL STREETS: 25-FEET AND SHALL BE LANDSCAPED.
    B. FLOOR SPACE AREA RESTRICTIONS: NONE REQUIRED.
    C. MAXIMUM BUILDING HEIGHT REQUIREMENTS: NONE REQUIRED.
    D.. BUILDING SITE AREA REQUIREMENTS: NONE REQUIRED.
    E. BUILDING DENSITY FORMULA: NONE REQUIRED.
    SOURCE; THE PLANNING AND ZONING RESOURCE COMPANY, REVISED DRAFT DATED AUGUST 8, 2017, PZR SITE NUMBER 105399-1. CONTACT INFORMATION: ADDRESS; 1300 SOUTH MERIDIAN AVENUE, SUITE 400, OKLAHOMA ITY, OKLAHOMA 73108, PHONE (405) 840-4344.
11. CALVIN, GIORDANO, AND ASSOCIATES, INC. MAINTAINS $1,000,000 PER EACH OCCURRENCE, AND $2,000,000 GENERAL AGGREGATE OF PROFESSIONAL LIABILITY INSURANCE.
12. NO PORTION OF DESCRIBED PROPERTY LIES EAST OF THE EROSION CONTROL LINE PER INSTRUMENT RECORDED IN MISCELLANEOUS PLAT BOOK BOOK 5, PAGE 7 OF BROWARD COUNTY RECORDS.
13. THERE WERE NO JURISDICTIONAL WETLANDS DELINEATED ON THIS PROJECT.
14. NO RECORDED DOCUMENTATION WAS PROVIDED FOR THE GAS LINE EASEMENT NEAR THE NW CORNER OF THE SUBJECT PROPERTY AS SHOWN ON SHEETS 2 AND 3. IT'S LOCATION IS BASED ON A SKETCH AND LEGAL DESCRIPTION PREPARED BY CALVIN, GIORDANO AND ASSOCIATES, INC. IN SEPTEMBER OF 2006. THERE ARE SEVERAL GAS VALVES LOCATED WITHIN THIS EASEMENT.
15. THE RELATIVE POSITIONAL PRECISION OF THIS SURVEY MEETS THE 95 PERCENT CONFIDENCE LEVEL AND IS WITHIN THE MAXIMUM ALLOWABLE RELATIVE POSITIONAL PRECISION OF 0.07 FEET PLUS 50 PARTS PER MILLION OF THE MONUMENTS AND/OR WITNESSES MARKING THE CORNERS OF THE SURVEYED PROPERTY.
16. LOCATIONS OF EXISTING UTILITIES ON OR SERVING THE PROPERTY WERE OBTAINED VIA ABOVE GROUND OBSERVATIONS ONLY. UTILITY LOCATE REQUESTS REQUIRE A DIG TICKET FOR FUTURE EXCAVATION /CONSTRUCTION AS A RESULT OF NO PENDING EXCAVATION/CONSTRUCTION THE LOCATION SERVICES WERE UNAVAILABLE.

LEGAL DESCRIPTION

Tract 2: (Diplomat Landing)

The land referred to herein below is situated in the County of Broward, State of FL, and described as follows:

Parcel 1:

All of Parcel C and a Portion of Parcel D, Diplomat Resort and Country Club Plat, according to the plat thereof as recorded in Plat Book 158, Page 16, of the Public Records of Broward County, Florida, together with a portion of Beverly Beach No. 2, according to the plat thereof as recorded in Plat Book 40, Page 24 of said Public Records of Broward County, Florida, all being more particularly described as follows:

Beginning at the Southeast corner of said Parcel C, said point being located on the Westerly right-of-way line of South Ocean Boulevard (State Road A-1-A) as shown on said Diplomat Resort and Country Club Plat;

Thence South 87°18'02" West on the South line of said Parcel C, a distance of 421.96 feet to the Southwest corner of said Parcel C, said point being located on the Easterly right-of-way line of the Intracoastal Waterway as shown on Plat Book 17, Page 24 of the Public Records of Broward County, Florida;

Thence North 19°22'37" East on the Westerly line of said Parcels C and D and on the Westerly line of said portion of Beverly Beach No. 2 and on said Easterly right-of-way line of the Intracoastal Waterway, a distance of 888.83 feet;

Thence North 04° 32'14" East continuing on said Westerly line of Parcel D and on said Easterly right-of-way line of the Intracoastal Waterway, a distance of 239.97 feet to the Northwest corner of said Parcel D;

Thence South 84°52'00" East on the North line of said Parcel D, a distance of 60.83 feet to the Northwest corner of a parcel of land described in that certain Warranty Deed recorded in Official Records Book 33836, Page 130 of the Public Records of Broward County, Florida;

Thence South 05°08'00" West on the Westerly line of said parcel of land, a distance of 22.50 feet to the Southwest corner of said parcel of land;

Thence South 54°52'00" East on the South line of said parcel of land, a distance of 141.00 feet to the intersection with the Easterly line of said Parcel D and with said Westerly right-of-way line of South Ocean Boulevard (State Road A-1-A);

Thence South 05°08'00" West on said East line of Parcel D and on said Westerly right-of-way line of South Ocean Boulevard (State Road A-1-A), a distance of 20.96 feet to the Northerly most corner of a right-hand turn lane as described in that certain Warranty Deed recorded in Official Records Book 31014, Page 124 of the Public Records of Broward County, Florida;

Thence Southwesterly on the Westerly line of said right-hand turn lane the following three (3) courses and distances:

South 18°37'45" West, a distance of 51.42 feet;

South 05°08'00" West, a distance of 288.00 feet;

South 84°52'00" East, a distance of 12.00 feet to the intersection with said East line of Parcel D and with said Westerly right-of-way line of South Ocean Boulevard (State Road A-1-A);

Thence South 05°08'00" West on said East line of Parcel D, on the East line of said Parcel C, and on said Westerly right-of-way line of South Ocean Boulevard (State Road A-1-A) as shown on Diplomat Resort and Country Club Plat and as described in Official Records Book 30361, Page 978 of the Public Records of Broward County, Florida, a distance of 662.50 feet to the Point of Beginning.

Said lands lying in the City of Hollywood, Broward County, Florida.

Formerly described as:

Parcel 2:

Parcel C, Diplomat Resort and Country Club Plat, according to the plat thereof, as recorded in Plat Book 158, at Page 16, of the Public Records of Broward County, Florida.

Formerly known as:

All of Beverly Beach No. 2, according to the plat thereof, as recorded in Plat Book 40, at Page 24, of the Public Records of Broward County, Florida, with the exception of the following described Parcels A and B, to wit:

Parcel A:

That part of said Beverly Beach No. 2, described as follows:

Beginning at the Northeast corner of said subdivision; thence run South along the West right-of-way line of S. Ocean drive (State Road A1A) 20 feet; thence, run West parallel to the North line of said Subdivision 147 feet; thence run South parallel to S. Ocean Drive (State Road A1A) 40 feet; thence run West parallel to the North line of said subdivision 60 feet; thence run North parallel to S. Ocean Drive (State Road A1A) 60 feet to the North line of said subdivision; thence run East along the Northline of said subdivision 207 feet to the Point of Beginning.

Parcel B:

That part of said Beverly Beach No. 2, described as follows:

Beginning at a point on the North line of said subdivision, said point being located 207 feet West of the Northeast corner of said subdivision; thence run South parallel to S. Ocean Drive (State Road A1A) a distance of 10 feet; thence run West parallel to the Northline of said subdivision 56 feet, more or less, to the Westerly line of said subdivision; thence run Northeasterly along said Westerly line of said subdivision 10 feet, more or less, to the Northwest corner of said subdivision; thence run East along said North line of said subdivision 56.27 feet, more or less, to the Point of Beginning.

And

(2 Acre Parcel)

A portion of Parcel "C", "Diplomat Resort and Country Club Plat", according to the plat thereof, as recorded in Plat Book 158, at Page 16, of the Public Records of Broward County, Florida, being more particularly described as follows:

Beginning at the Southeast corner of Parcel "C", said point being on the West right-of-way line of South Ocean Drive (State Road A-1-A) as shown on said plat; thence South 87°18'02" East on the South line of said Parcel "C", 421.96 feet to the Southwest corner of said Parcel "C"; thence North 19°22'37" East on the West line of said Parcel 'C', thence North 86°47'09" East, 363.17 feet to a point on the East line of said Parcel "C" and said West right-of-way line; thence South 05°08'00" West on said East line and said West right-of-way line, 223.06 feet to the Point of Beginning.

Parcel 5:

Parcel D, Diplomat Resort and Country Club Plat, according to the plat thereof, as recorded in Plat Book 158, Page 16, of the Public Records of Broward County, Florida.

LEGAL DESCRIPTION (CONTINUED)

Formerly known as:

Lots 30, 31, 32 and 33, in Block 15, of Beverly Beach, according to the plat thereof, as recorded in Plat Book 22, Page 13, of the Public Records of Broward County, Florida.

Less and excepting the Deed for right hand turn lanes as recorded in Official Records Book 31014, Page 124, of the Public Records of Broward County, Florida.

Also, less and excepting the dedicated right-of-way as recorded in Official Records Book 30631, Page 978, of the Public Records of Broward County, Florida.

And less and except lands described in Official Records Book 33836, Page 130, of the Public Records of Broward County, Florida.

Together with easement rights for the benefit of Parcel 5, created by that certain Warranty Deed recorded in Official Records Book 33836, Page 130, of the Public Records of Broward County, Florida.

And

Parcel 7:

That part of Beverly Beach No. 2, described as follows:

Beginning at the Northeast corner of said subdivision; thence run South along the West right-of-way line of S. Ocean Drive (State Road A1A) for a distance of twenty (20) feet; thence, run West parallel to the North line of said subdivision a distance of one hundred forty-seven (147) feet; thence run South parallel to S. Ocean Drive (State Road A1A) for forty (40) feet; thence run West parallel to the North line of said subdivision for a distance of sixty (60) feet; thence run North parallel to S. Ocean Drive (State Road A1A) for a distance of sixty (60) feet to the North line of said subdivision; thence run East along the North line of said subdivision for a distance of two hundred and seven (207) feet to the Point of Beginning.

And

Parcel 8:

The legal description is listed as Parcel B in Quit Claim Deed recorded in Official Records Book 15062, at Page 881, of the Public Records of Broward County, Florida, and is more particularly described as follows:

Parcel B:

That part of Beverly Beach No. 2, described as follows:

Beginning at a point on the North line of said subdivision, said point being located 207 feet West of the Northeast corner of said subdivision; thence run South parallel to S. Ocean Drive (State Road A1A) a distance of 10 feet; thence run West parallel to the Northline of said subdivision 56 feet, more or less, to the Westerly line of said subdivision; thence run Northeasterly along said Westerly line of said subdivision 10 feet, more or less, to the Northwest corner of said subdivision; thence run East along said North line of said subdivision 56.27 feet, to the Point of Beginning.

Also known as:

A portion of "Beverly Beach No. 2", according to the plat thereof, as recorded in Plat Book 40, Page 24, of the Public Records of Broward County, Florida, more particularly described as follows:

Commence at the Northeast corner of "Beverly Beach No. 2"; thence North 84°52'00" West on the North line of said plat, also being the South line of Parcel "D", "Diplomat Resort and Country Club Plat", according to the plat thereof, as recorded in Plat Book 158, at Page 16, of the Public Records of Broward County, Florida, a distance of 207.00 feet to the Point of Beginning; thence South 05°08'00" West, 10.00 feet to the Northerly boundary of Parcel "C", of said "Diplomat Resort and Country Club Plat"; thence North 84° 52'00" West on said Northerly boundary, 58.81 feet to the Northwest corner of Parcel "C", said point being on the Easterly right-of-way line of Intracoastal Waterway as shown on Plat Book 17, at Page 24, of the Public Records of Broward County, Florida; thence North 19°22'37"East on said Easterly right-of-way line, 10.32 feet to the Northwest corner of "Beverly Beach No. 2"; thence South 84°52'00" East on said North line of "Beverly Beach No. 2", a distance 56.27 feet to the Point of Beginning.

Parcel 2:

Together with the Maintenance and Repairs Easement, Pedestrian Beach Access Easement, Shared Facilities Easement and Parking Easement created in the Grant of Cross Easements, Covenants and Restrictions Agreement recorded August 28, 2014 in Official Records Book 51050, Page 155, of the Public Records of Broward County, Florida.

TITLE COMMITMENT REPORT

Fidelity National Title Insurance Company, Commitment for Title Insurance, Commitment No. FL252109245JC, Project Name: The Diplomat Hotel, 3555 S. Ocean/3210-3451 S Ocean, Effective Date of Commitment: January 27, 2022 @ 8:00 A.M., has been reviewed and Schedule B-II Exceptions as they pertain to survey matters are as follows:

30. Dedications, notes, easements and other relevant matters shown on plat of Beverly Beach, recorded in Plat Book 22, Page 13 of the Public Records of Broward County, Florida. "PORTION OF THE PLAT OF BEVERLY BEACH APPLICABLE TO THE PROPERTY AS DESCRIBED HEREON, RE-PLATTED UNDER DIPLOMAT RESORT AND COUNTRY CLUB PLAT, RECORDED IN PLAT BOOK 158, PAGE 16, PUBLIC RECORDS OF BROWARD COUNTY, FLORIDA."

31. Dedications, notes, easements and other relevant matters shown on plat of Beverly Beach No. 2, recorded in Plat Book 40, Page 24 of the Public Records of Broward County, Florida. "PORTION OF THE PLAT OF BEVERLY BEACH NO. 2, APPLICABLE TO THE PROPERTY AS DESCRIBED, HEREON RE-PLATTED UNDER DIPLOMAT RESORT AND COUNTRY CLUB PLAT, RECORDED IN PLAT BOOK 158, PAGE 16, PUBLIC RECORDS OF BROWARD COUNTY, FLORIDA"

32. Dedications, notes, easements and other relevant matters shown on plat of Diplomat Resort and Country Club Plat, recorded in Plat Book 158, Page 16; as amended by Agreement for Amendment of Notation on Plat recorded in Official Records Book 30470, Page 164; as amended by Amendment of Notation on Plat recorded in Official Records Book 48375, Page 469 of the Public Records of Broward County, Florida. "PLAT INFORMATION SHOWN HEREON; PROPERTY AS DESCRIBED HEREON A PORTION OF THE PROPERTY DESCRIBED IN O.R.B. 30470, PAGE 164; NVAL REVISIONS AS DESCRIBED IN O.R.B. 48375, PAGE 469, SHOWN HEREON."

33. Lift Station Exchange Agreement as contained within City of Hollywood Resolution No. R-98-452 recorded in Official Records Book 29816, Page 1586, of the Public Records of Broward County, Florida. "LIFT STATION INFORMATION SHOWN HEREON."

34. Perpetual Easement in favor of the State of Florida Department of Transportation recorded in Official Records Book 30631, Page 983, of the Public Records of Broward County, Florida. "PERPETUAL EASEMENT SHOWN HEREON"

35. Agreement by and between Broward County and Diplomat Properties Relating to Nonvehicular Access Lines recorded in Official Records Book 30938, Page 1396, of the Public Records of Broward County, Florida. "NVAL REVISIONS SHOWN HEREON."

36. Declaration in Lieu of Unity of Title recorded in Official Records Book 31030, Page 882, of the Public Records of Broward County, Florida. "PROPERTY AS DESCRIBED HEREON A PORTION OF THE PROPERTY AS DESCRIBED IN SAID DOCUMENTS."

37. Easement Agreement by and between Diplomat Properties and the City of Hollywood recorded in Official Records Book 33836, Page 135, of the Public Records of Broward County, Florida. "EASEMENT INFORMATION SHOWN HEREON."

38. Easement in favor of Florida Power and Light Company recorded in Official Records Book 35273, Page 1596, of the Public Records of Broward County, Florida. "EASEMENT INFORMATION SHOWN HEREON.

39. Declaration of Restrictions recorded November 12, 2003 in Official Records Book 36415, Page 23, of the Public Records of Broward County, Florida but deleting any covenant, condition or restriction indicating a preference, limitation or discrimination based on race, color, religion, sex, handicap, familial status or national origin to the extent such covenants, conditions or restrictions, violate 42 USC 3604(c).. "PROPERTY AS DESCRIBED HEREON A PORTION OF THE PROPERTY AS DESCRIBED IN SAID DOCUMENTS."

40. City of Hollywood Development Review Board Resolution No. 06-DV-106 recorded in Official Records Book 43623, Page 437, of the Public Records of Broward County, Florida "PROPERTY AS DESCRIBED HEREON A PORTION OF THE PROPERTY AS DESCRIBED IN SAID DOCUMENTS."

41. Declaration of Restrictive Use Covenant recorded in Official Records Book 51050, Page 127, of the Public Records of Broward County, Florida. "PROPERTY AS DESCRIBED HEREON A PORTION OF THE PROPERTY AS DESCRIBED IN SAID DOCUMENTS."

42. Grant of Cross Easements, Covenants and Restrictions Agreement by and between Diplomat Hotel Owner LLC and Diplomat Landings Owner LLC recorded in Official Records Book 51050, Page 155, of the Public Records of Broward County, Florida. "PROPERTY AS DESCRIBED HEREON A PORTION OF THE PROPERTY AS DESCRIBED IN SAID DOCUMENTS."

43. Terms, conditions and provisions in that certain unrecorded Lease Agreement by and between Diplomat Landings Owner LLC, as Landlord, and Diplomat Hotel Owner LLC, as Tenant, as evidenced by the Short Form Lease (Administrative Space) recorded in Official Records Book 51050, Page 208, of the Public Records of Broward County, Florida. "PROPERTY AS DESCRIBED HEREON A PORTION OF THE PROPERTY AS DESCRIBED IN SAID DOCUMENTS."

44. Terms, conditions and provisions in that certain unrecorded Lease Agreement by and between Diplomat Landings Owner LLC, as Landlord, and Diplomat Hotel Owner LLC, as Tenant, as evidenced by the Short Form Lease (Parking Garage) recorded in Official Records Book 51050, Page 224, of the Public Records of Broward County, Florida. "PROPERTY AS DESCRIBED HEREON A PORTION OF THE PROPERTY AS DESCRIBED IN SAID DOCUMENTS."

45. Declaration of Restrictive Covenants recorded December 23, 2019 in Official Records Instrument #116251403, of the Public Records of Broward County, Florida, but deleting any covenant, condition or restriction indicating a preference, limitation or discrimination based on race, color, religion, sex, handicap, familial status or national origin to the extent such covenants, conditions or restrictions violate 42 USC 3604(c). "AREA OF RESIDENTIAL PROPERTY AS DESCRIBED IN SAID DOCUMENTS."

46. Perpetual Easement granted to the State of Florida Department of Transportation, recorded April 14, 2020 in Official Records Instrument #116459382, of the Public Records of Broward County, Florida."EASEMENT INFORMATION SHOWN HEREON."

47. The Company does not insure title to any land lying between the mean high water line on the date of recordation of the Erosion Control Line Plat in Miscellaneous Book 5, Page 7, of the Public Records of Broward County, Florida, and the Erosion Control Line as shown therein, which may have vested in the insured or its predecessors in title pursuant to Chapter 161, Florida Statutes. "PROPERTY AS DESCRIBED HEREON NOT WITHIN THE AREA OF THE EROSION CONTROL LINE."

48. Due to all or a part of the land described herein being artificially filled in land in what was formerly navigable waters, this policy is subject to the right of the United States Government and/or the State of Florida, arising by reason of the United States Government's control over navigable waters in the interest of navigation and commerce and/or the inalienable right of the State of Florida in the lands and/or waters of such character.

49. The right, title or interest, if any, of the public to use as a public beach or recreation area any part of the Land lying between the water abutting the Land and the most inland of any of the following: (a) the natural line of vegetation; (b) the most extreme high water mark; (c) the bulkhead line, or (d) any other line which has been or which hereafter may be legally established as relating to such public use.

50. Riparian and/or littoral rights are not insured.

51. No coverage is afforded by this policy for the dock facilities located along the Western boundary of the subject property in the Intracoastal Waterway.

CERTIFICATION

CERTIFIED TO: FIDELITY NATIONAL TITLE INSURANCE COMPANY; DIPLOMAT FLORIDA HOTEL LLC, A DELAWARE LIMITED LIABILITY COMPANY; DIPLOMAT FLORIDA LANDINGS LLC, A DELAWARE LIMITED LIABILITY COMPANY; DIPLOMAT FLORIDA PARCEL A LLC, A DELAWARE LIMITED LIABILITY COMPANY.

THIS IS TO CERTIFY THAT THIS MAP OR PLAT AND THE SURVEY ON WHICH IT IS BASED WERE MADE IN ACCORDANCE WITH THE 2016 MINIMUM STANDARD DETAIL REQUIREMENTS FOR ALTA/NSPS LAND TITLE SURVEYS, JOINTLY ESTABLISHED AND ADOPTED BY ALTA AND NSPS, AND INCLUDES ITEMS 2, 3, 4, 6(a), 6(b), 7(a), 7(b)(1), 7(c), 8, 9, 11, 13, 16, 17, 18, 19 AND 20 OF TABLE A THEREOF.
THE FIELDWORK WAS COMPLETED ON MARCH 4, 2022.

DATE OF PLAT OR MAP: MARCH 4, 2022

NAME: STEVEN M. WATTS
REGISTRATION/LICENSE NUMBER: PSM 4588

STEVEN M. WATTS CERTIFICATE No. 4588 STATE OF FLORIDA REGISTERED LAND SURVEYOR

NO	DATE	REVISION	BY	NO	DATE	REVISION	BY

SURVEY DATE 03-04-2022
DRAWN KP DATE 03-04-2022
CHECKED SMW DATE 03-10-2022

Calvin, Giordano & Associates, Inc.
A SAFEBUILT COMPANY
1800 Eller Drive, Suite 600, Fort Lauderdale, FL 33316
Phone: 954.921.7781 • Fax: 954.921.8807
Certificate of Authorization 6791

ALTA/NSPS LAND TITLE SURVEY
MAP OF BOUNDARY SURVEY

THE DIPLOMAT BEACH RESORT
DIPLOMAT LANDING
HOLLYWOOD, BROWARD COUNTY, FLORIDA

SEAL
NOT VALID WITHOUT THE SIGNATURE AND THE ORIGINAL RAISED SEAL OF A FLORIDA LICENSED SURVEYOR & MAPPER
STEVEN M. WATTS
PSM NO. 4588

SCALE N/A
PROJECT No 22-6009
CAD FILE

SHEET: 1 OF 3

File Name: P:\Projects\2022\226009 Diplomat Hotel ALTA Survey 2022\Survey\SKETCH\22-6009-V-AL-Diplomat Hotel-ALTA 2022.dwg - (Plotted by: Steve Watts on Tuesday, March 15, 2022 11:39:35 AM)

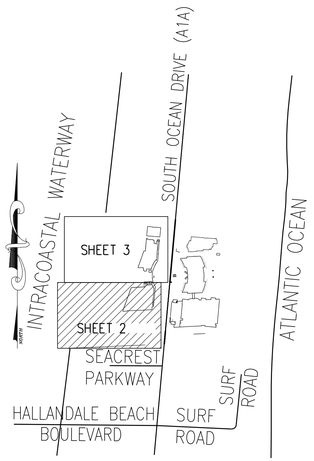

LOCATION MAP
NOT TO SCALE

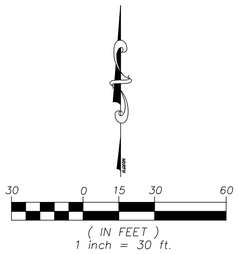

SYMBOL LEGEND

- = BACKFLOW PREVENTOR
- = BOLLARD
- = CATCH BASIN
- = CLEANOUT
- = COLUMN
- = CONC. POWER POLE
- = CROSS WALK SIGNAL POLE
- = DRAINAGE MANHOLE
- = DOUBLE PREVENTION CHECK VALVE
- = ELECTRIC BOX
- = ELECTRIC HANDHOLE
- = ELECTRIC METER\RACK
- x — = FENCE
- = FIBER OPTIC
- = FIRE HYDRANT
- = FLAG POLE
- = FOUND PROPERTY CORNER
- = FPL TRANSFORMER PAD
- = GAS METER
- = GAS VALVE
- = GREASE TRAP\MANHOLE
- = GUY ANCHOR
- = IRRIGATION VALVE
- = LAMP POST
- = MAST ARM
- = METAL LIGHT POLE
- = OVERHEAD ELECTRIC
- = PARKING METER
- = SANITARY MANHOLE
- = SANITARY VALVE
- = SIGN
- = TELEPHONE HANDHOLE
- = TRAFFIC SIGNAL HANDHOLE
- = WATER METER
- = WATER VALVE
- = WOOD POST
- = WOOD POWER POLE
- = NON-VEHICULAR ACCESS LINE

ABBREVIATIONS

ALUM.	=	ALUMINUM FENCE
B.C.R.	=	BROWARD COUNTY RECORDS
BLDG.	=	BUILDING
CATV	=	CABLE TELEVISION
℄	=	CENTERLINE
CLF	=	CHAIN LINK FENCE
COL.	=	COLUMN
CONC.	=	CONCRETE
CBS	=	CONCRETE BLOCK W STUCCO
C&G	=	CURB & GUTTER
D.B.	=	DEED BOOK
E-O-P	=	EDGE-OF-PAVEMENT
F.D.O.T.	=	FLORIDA DEPARTMENT OF TRANSPORTATION
FPL	=	FLORIDA POWER & LIGHT
FND.	=	FOUND
GRAV.	=	GRAVEL
I.P.	=	IRON PIPE
I.R.	=	IRON ROD
IRC	=	IRON ROD & CAP
LB	=	LICENSED BUSINESS
N&D	=	NAIL AND DISK
NAVD88	=	NORTH AMERICAN DATUM OF 1988
O.R.B.	=	OFFICIAL RECORDS BOOK
PG.	=	PAGE
PRM	=	PERMANENT REFERENCE MONUMENT
P.B.	=	PLAT BOOK
PSM	=	PROFESSIONAL SURVEYOR & MAPPER
R/W	=	RIGHT-OF-WAY
S.R.	=	STATE ROAD
TC	=	TITLE COMMITMENT
W	=	WITH
M.P.B.	=	MISCELLANEOUS PLAT BOOK
CA	=	CENTRAL ANGLE
SIRC	=	SET IRON ROD & CAP
FIRC	=	FOUND IRON ROD & CAP
L	=	LENGTH
R	=	RADIUS
F.F.	=	FINISH FLOOR
EOW	=	EDGE OF WATER
PL	=	PROPERTY LINE
HT.	=	HEIGHT

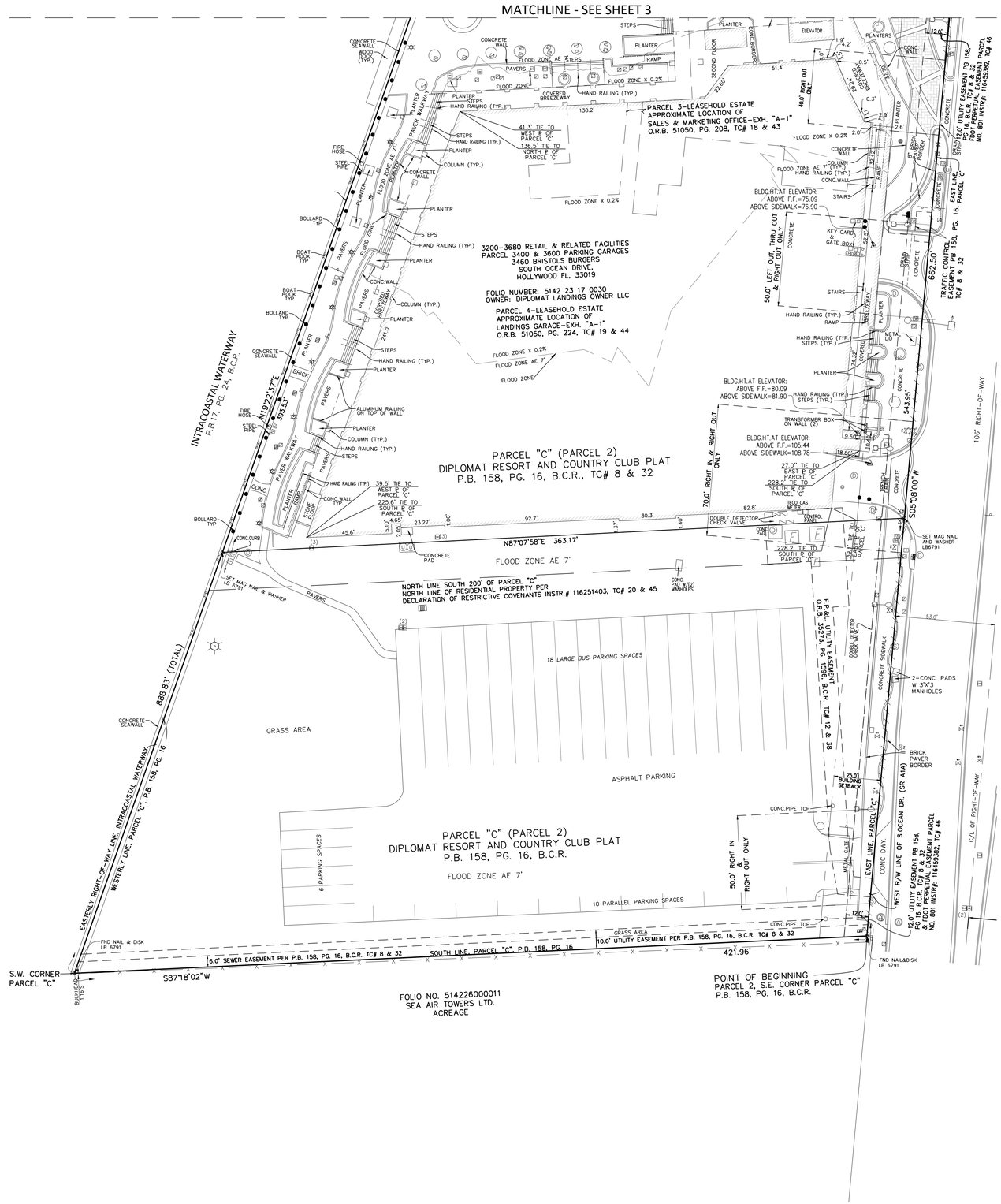

File Name: P:\Projects\2022\226009 Diplomat Hotel ALTA Survey 2022\Survey\SKETCH\22-6009-V-AL-Diplomat Hotel-ALTA 2022.dwg - (Plotted by: Steve Watts on Tuesday, March 15, 2022 11:39:59 AM)

NO	DATE	REVISION	BY
1	9/16/2019	REVISE CERTIFICATION ENTITIES & ADD ABBREVIATIONS\LEGEND	SMW

SURVEY DATE	03-04-2022
DRAWN DATE	KP 03-04-2022
CHECKED DATE	SMW 03-10-2022

Calvin, Giordano & Associates, Inc.
A SAFEbuilt COMPANY
1800 Eller Drive, Suite 600, Fort Lauderdale, FL 33316
Phone: 954.921.7781 • Fax: 954.921.8807
Certificate of Authorization 6791

ALTA/NSPS LAND TITLE SURVEY
MAP OF BOUNDARY SURVEY

THE DIPLOMAT BEACH RESORT
DIPLOMAT LANDING
HOLLYWOOD, BROWARD COUNTY, FLORIDA

STEVEN M. WATTS CERTIFICATE No. 4588 STATE OF FLORIDA REGISTERED LAND SURVEYOR

SCALE	1"=30'
PROJECT No	22-6009
CAD FILE	
SHEET:	2 OF 3

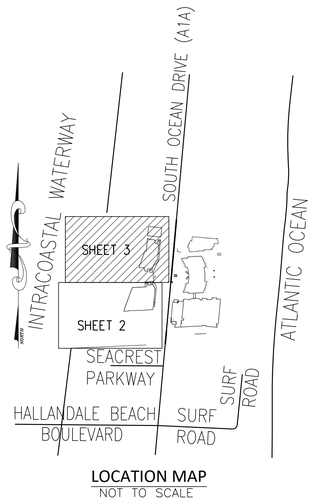

LOCATION MAP
NOT TO SCALE

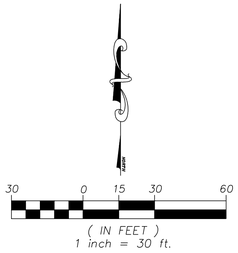

SYMBOL LEGEND

- = BACKFLOW PREVENTOR
- = BOLLARD
- = CATCH BASIN
- = CLEANOUT
- = COLUMN
- = CONC. POWER POLE
- = CROSS WALK SIGNAL POLE
- = DRAINAGE MANHOLE
- = DOUBLE PREVENTION CHECK VALVE
- = ELECTRIC BOX
- = ELECTRIC HANDHOLE
- = ELECTRIC METER\RACK
- = FENCE
- = FIBER OPTIC
- = FIRE HYDRANT
- = FLAG POLE
- = FOUND PROPERTY CORNER
- = FPL TRANSFORMER PAD
- = GAS METER
- = GAS VALVE
- = GREASE TRAP\MANHOLE
- = GUY ANCHOR
- = IRRIGATION VALVE
- = LAMP POST
- = MAST ARM
- = METAL LIGHT POLE
- = OVERHEAD ELECTRIC
- = PARKING METER
- = SANITARY MANHOLE
- = SANITARY VALVE
- = SIGN
- = TELEPHONE HANDHOLE
- = TRAFFIC SIGNAL HANDHOLE
- = WATER METER
- = WATER VALVE
- = WOOD POST
- = WOOD POWER POLE
- = NON-VEHICULAR ACCESS LINE

ABBREVIATIONS

ALUM.	= ALUMINUM FENCE
B.C.R.	= BROWARD COUNTY RECORDS
BLDG.	= BUILDING
CATV	= CABLE TELEVISION
℄	= CENTERLINE
CLF	= CHAIN LINK FENCE
COL.	= COLUMN
CONC.	= CONCRETE
CBS	= CONCRETE BLOCK W STUCCO
C&G	= CURB & GUTTER
D.B.	= DEED BOOK
E-O-P	= EDGE-OF-PAVEMENT
F.D.O.T.	= FLORIDA DEPARTMENT OF TRANSPORTATION
FPL	= FLORIDA POWER & LIGHT
FND.	= FOUND
GRAV.	= GRAVEL
I.P.	= IRON PIPE
I.R.	= IRON ROD
IRC	= IRON ROD & CAP
LB	= LICENSED BUSINESS
N&D	= NAIL AND DISK
NAVD88	= NORTH AMERICAN DATUM OF 1988
O.R.B.	= OFFICIAL RECORDS BOOK
PG.	= PAGE
PRM	= PERMANENT REFERENCE MONUMENT
P.B.	= PLAT BOOK
PSM	= PROFESSIONAL SURVEYOR & MAPPER
R/W	= RIGHT-OF-WAY
S.R.	= STATE ROAD
TC	= TITLE COMMITMENT
W	= WITH
M.P.B.	= MISCELLANEOUS PLAT BOOK
CA	= CENTRAL ANGLE
SIRC	= SET IRON ROD & CAP
FIRC	= FOUND IRON ROD & CAP
L	= LENGTH
R	= RADIUS
F.F.	= FINISH FLOOR
EOW	= EDGE OF WATER
PL	= PROPERTY LINE
HT.	= HEIGHT

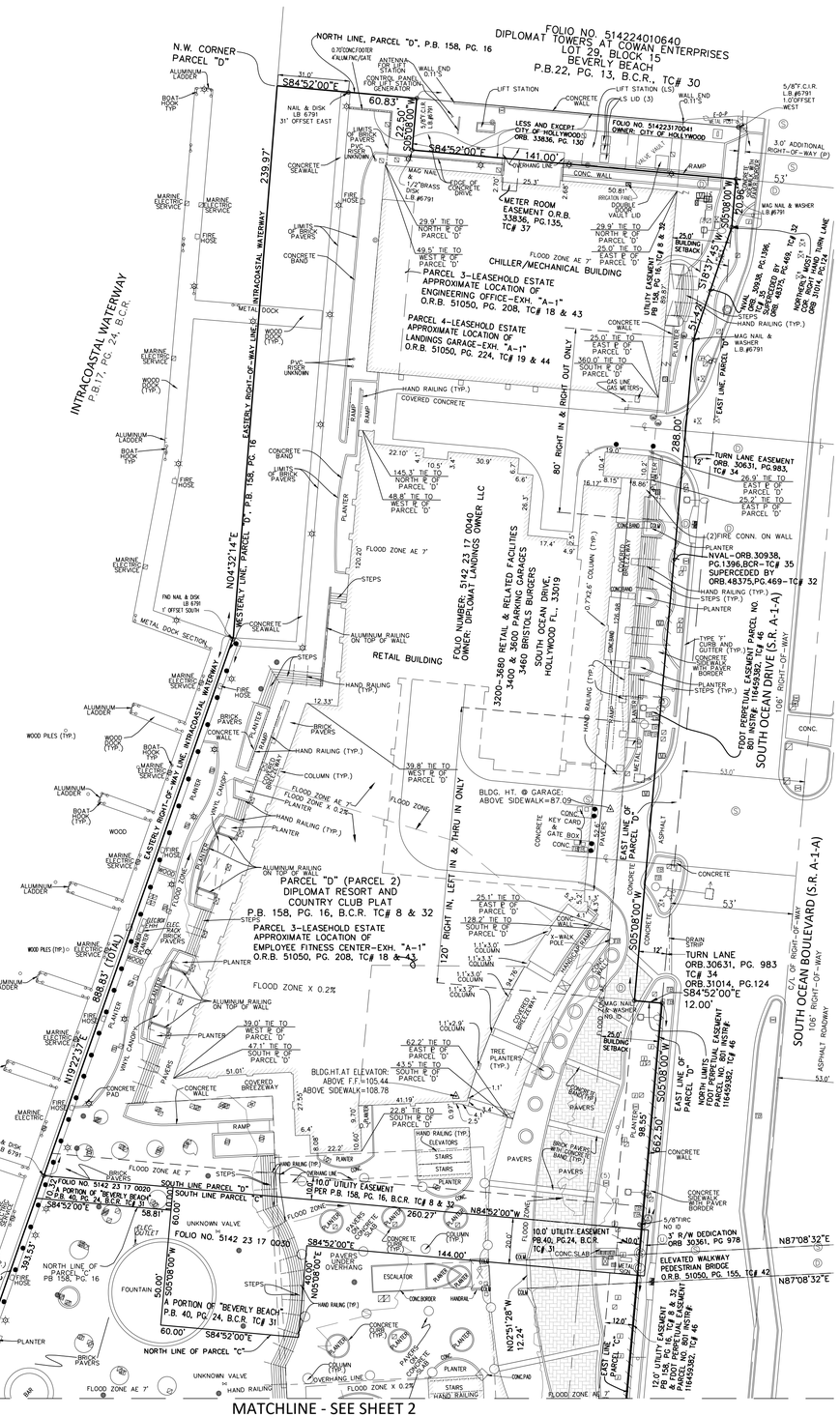

NO	DATE	REVISION	BY	NO	DATE	REVISION	BY

SURVEY DATE 03-04-2022
DRAWN KP DATE 03-04-2022
CHECKED SMW DATE 03-10-2022

Certificate of Authorization 6791

ALTA/NSPS LAND TITLE SURVEY
MAP OF BOUNDARY SURVEY

THE DIPLOMAT BEACH RESORT
DIPLOMAT LANDING
HOLLYWOOD, BROWARD COUNTY, FLORIDA

STEVEN M. WATTS CERTIFICATE No. 4588 STATE OF FLORIDA REGISTERED LAND SURVEYOR

SCALE 1"=30'
PROJECT No 22-6009
CAD FILE

SHEET: 3 OF 3

File Name: P:\Projects\2022\226009 Diplomat Hotel ALTA Survey 2022\Survey\SKETCH\22-6009-V-AL-Diplomat Hotel-ALTA 2022.dwg - (Plotted by: Steve Watts on Tuesday, March 15, 2022 11:40:25 AM)

PROJECT TEAM

DEVELOPER:

RELATED

ARCHITECTURE:

COHEN FREEDMAN ENCINOSA & ASSOCIATES
ARCHITECTS, PA
Lic. No. AA C 000779
8085 NW 155TH STREET
MIAMI-LAKES, FL 33016
P:305.826.3999 F:305.826.4155
www.cfearchitects.com

LANDSCAPE ARCHITECTURE:

WHP WITKIN HULTS + PARTNERS

CIVIL ENGINEERING:

Kimley»Horn

ZONING ATTORNEY:

Holland & Knight

DIPLOMAT LANDING

HOLLYWOOD, FL

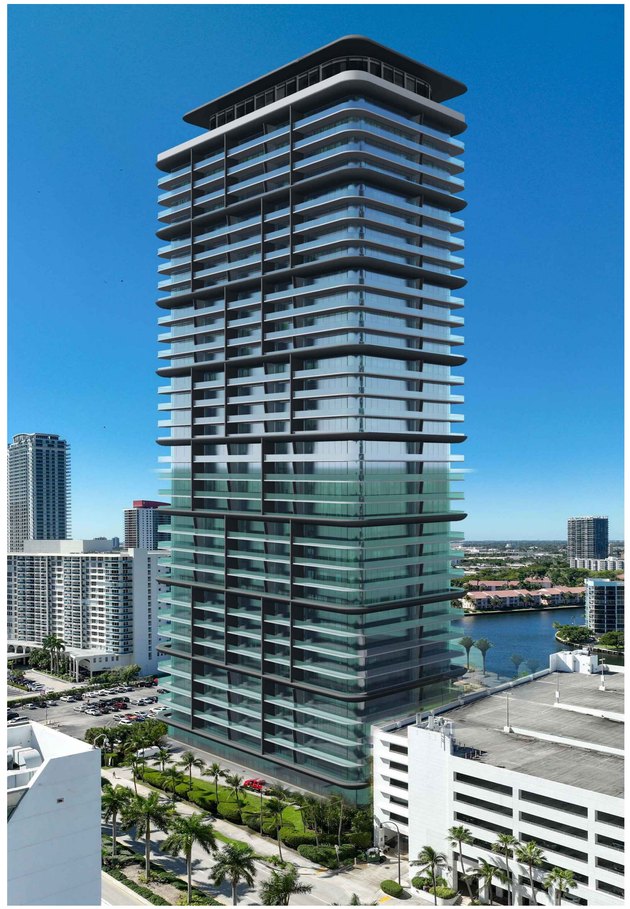

INDEX OF SHEETS

ARCHITECTURE

A0.0	COVER SHEET	A2.3	GARAGE LEVEL 4-37
A1.0	SITE PLAN / DATA	A2.4	TYPICAL LEVEL PLAN
A2.0	GROUND LEVEL PLAN	A4.0	BUILDING ELEVATIONS
A2.1	GARAGE LEVEL 2	A4.1	BUILDING ELEVATIONS
A2.2	GARAGE LEVEL 3		

COHEN • FREEDMAN • ENCINOSA & ASSOC.
Architects, PA
8085 N.W. 155th Street Miami Lakes, Florida 33016 305-826-3999

DESIGN REVIEW
DIPLOMAT LANDING
3451-3690 SOUTH OCEAN DRIVE, HOLLYWOOD, FL
COVER SHEET

revisions:

drawn by: LF/BP/JG/AB

date: 03/09/2023

sheet no: A0.0

project: 3908

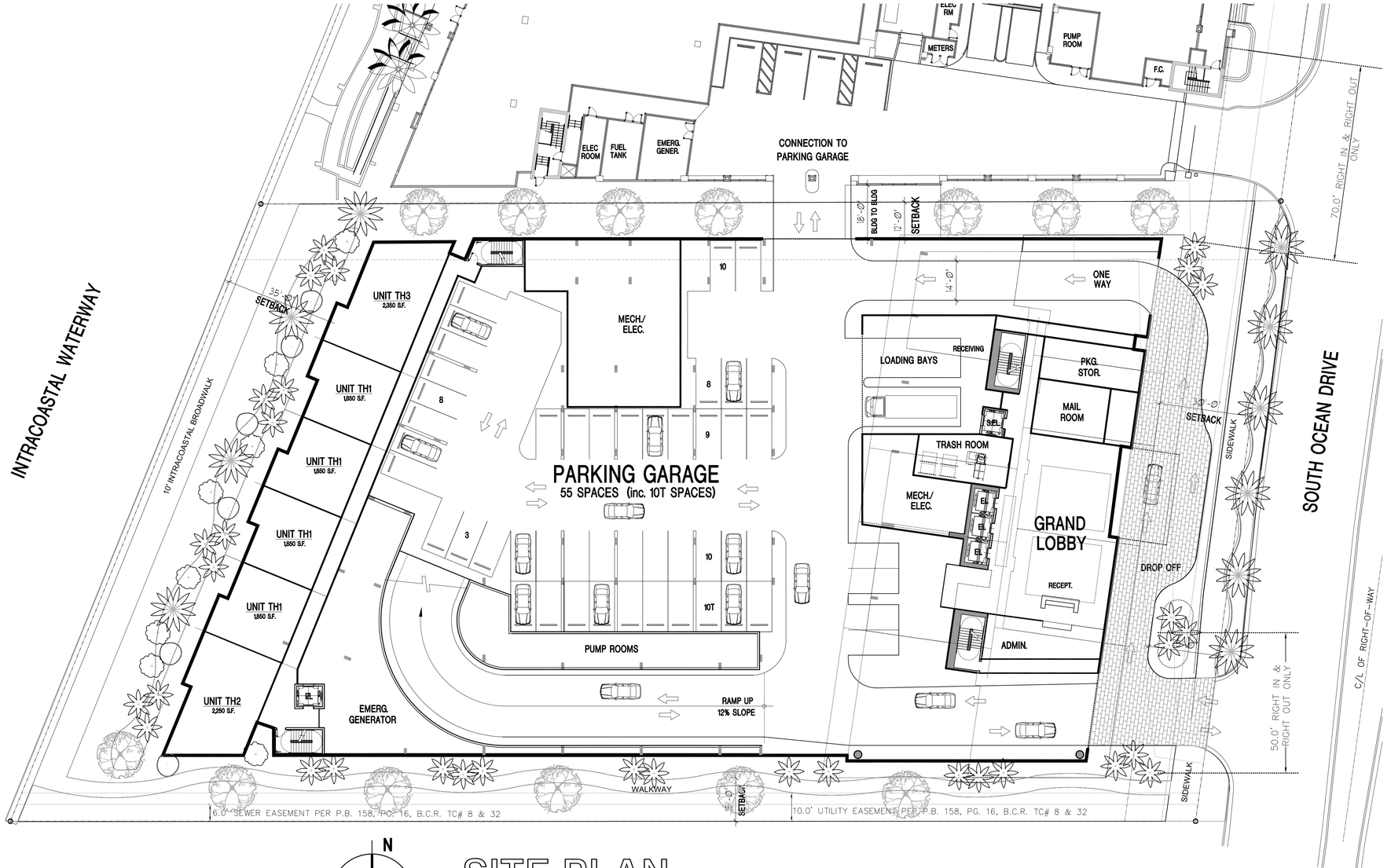

SITE PLAN

LEVEL: 1 SCALE: n.t.s.

Project Data	
Address	3451-3690 S Ocean Dr
City	Hollywood
State	Florida
Zip Code	33019
Lot Area (SF)	191,314 S.F.
Lot Area (Acres)	4.3920 Acres
RESIDENTIAL UNITS:	350 UNITS
Height	
Max Building Height	457 Ft
Proposed Building Height	419 Ft
Building Area	
Gross Building Area	685,264 S.F.
Net Building Area	469,420 S.F.
Building Amenity Area	
Building Setback	
Front (A1A)	40'
Rear (Intracoastal)	12'
Side 1 (Garage) (Garage Lvl)	12'
Side 1 (Garage) (Tower Lvl)	18' (Blg to blg)
Side (South Property Line)	15'
Parking	
Existing Parking Garage Parking Spaces	595 Spaces
Proposed New Parking Spaces	110 Spaces
Total Parking Spaces Provided	**705 Spaces**
Loading	
Resi Loading	2x(12'x35') SF



N SITE LOCATION

SCALE: N.T.S.

COHEN • FREEDMAN • ENCINOSA & ASSOC.
Architects, PA
8085 N.W. 155th Street Miami Lakes, Florida 33016 305 826 3999

DESIGN REVIEW
DIPLOMAT LANDING
3451-3690 SOUTH OCEAN DRIVE, HOLLYWOOD, FL
SITE PLAN / DATA TABLE

revisions:

drawn by: LF/SP/JG/AB

date: 03/09/2023

sheet no: A1.0

project: 3908

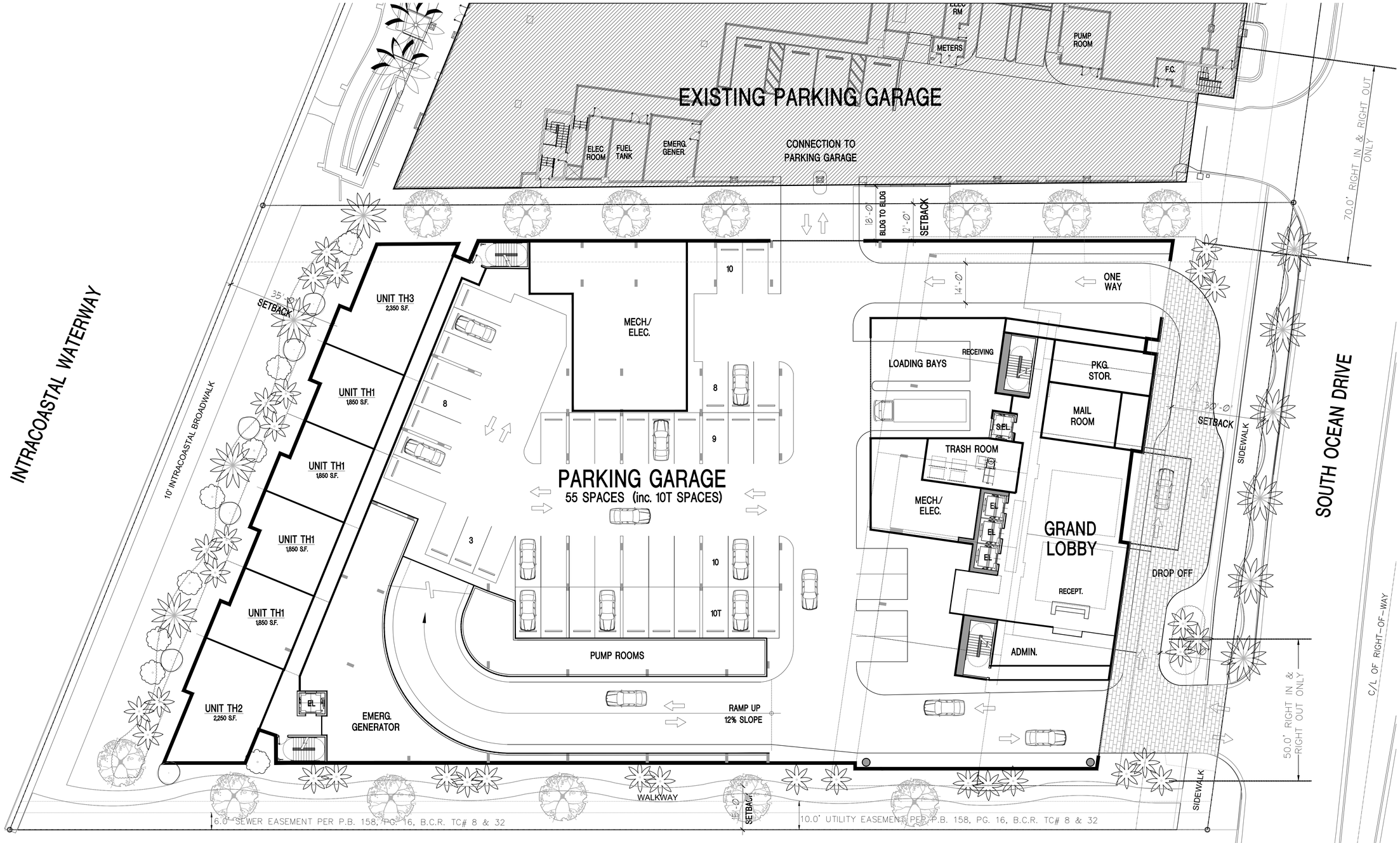

N

GROUND LEVEL

LEVEL: 1 SCALE: 1/16" = 1'-0"

COHEN • FREEDMAN • ENCINOSA & ASSOC.
Architects, PA
8085 N.W. 155th Street Miami Lakes, Florida 33016 305·826·3999

DESIGN REVIEW

DIPLOMAT LANDING

3451-3690 SOUTH OCEAN DRIVE, HOLLYWOOD, FL

SITE PLAN / DATA TABLE

revisions:

drawn by: LF/SP/JG/AB

date: 03/09/2023

sheet no: A2.0

project: 3908

INTRACOASTAL WATERWAY

10' INTRACOASTAL BROADWALK

SETBACK

UNIT TH3
UPPER LVLS.

UNIT TH1
UPPER LVLS.

UNIT TH1
UPPER LVLS.

UNIT TH1
UPPER LVLS.

UNIT TH2
UPPER LVLS.

TENANT STORAGE

EXISTING PARKING GARAGE

CONNECTION TO PARKING GARAGE

11

11

8

9

PARKING GARAGE
55 SPACES

10

RAMP DN 12% SLOPE

4

EL

EMERG. GENERATOR BELOW

BLDG. SERV.

14

S.EL.

T.

EL

EL

EL

ELEC

UNIT C1
3B/2B
1715 S.F.

UNIT A2
1B/1B
925 S.F.

UNIT B2
2B/2B
1285 S.F.

UNIT B2
2B/2B
1285 S.F.

UNIT C3
3B/2B
1750 S.F.

BUILDING STORAGE

30'-0" SETBACK

SIDEWALK

SOUTH OCEAN DRIVE

C/L OF RIGHT-OF-WAY

WALKWAY

10'-0" SETBACK

SIDEWALK

6.0' SEWER EASEMENT PER P.B. 158, PG. 16, B.C.R. TC# 8 & 32

10.0' UTILITY EASEMENT PER P.B. 158, PG. 16, B.C.R. TC# 8 & 32

N

GARAGE LEVEL

LEVEL: 2 SCALE: 1/16" = 1'-0"

COHEN • FREEDMAN • ENCINOSA & ASSOC.
Architects, PA
8085 N.W. 155th Street Miami Lakes, Florida 33016 305·826·3999

DESIGN REVIEW
DIPLOMAT LANDING
3451-3690 SOUTH OCEAN DRIVE, HOLLYWOOD, FL
SITE PLAN / DATA TABLE

revisions:

drawn by: LF/SP/JG/AB

date: 03/09/2023

sheet no: A2.1

project: 3908

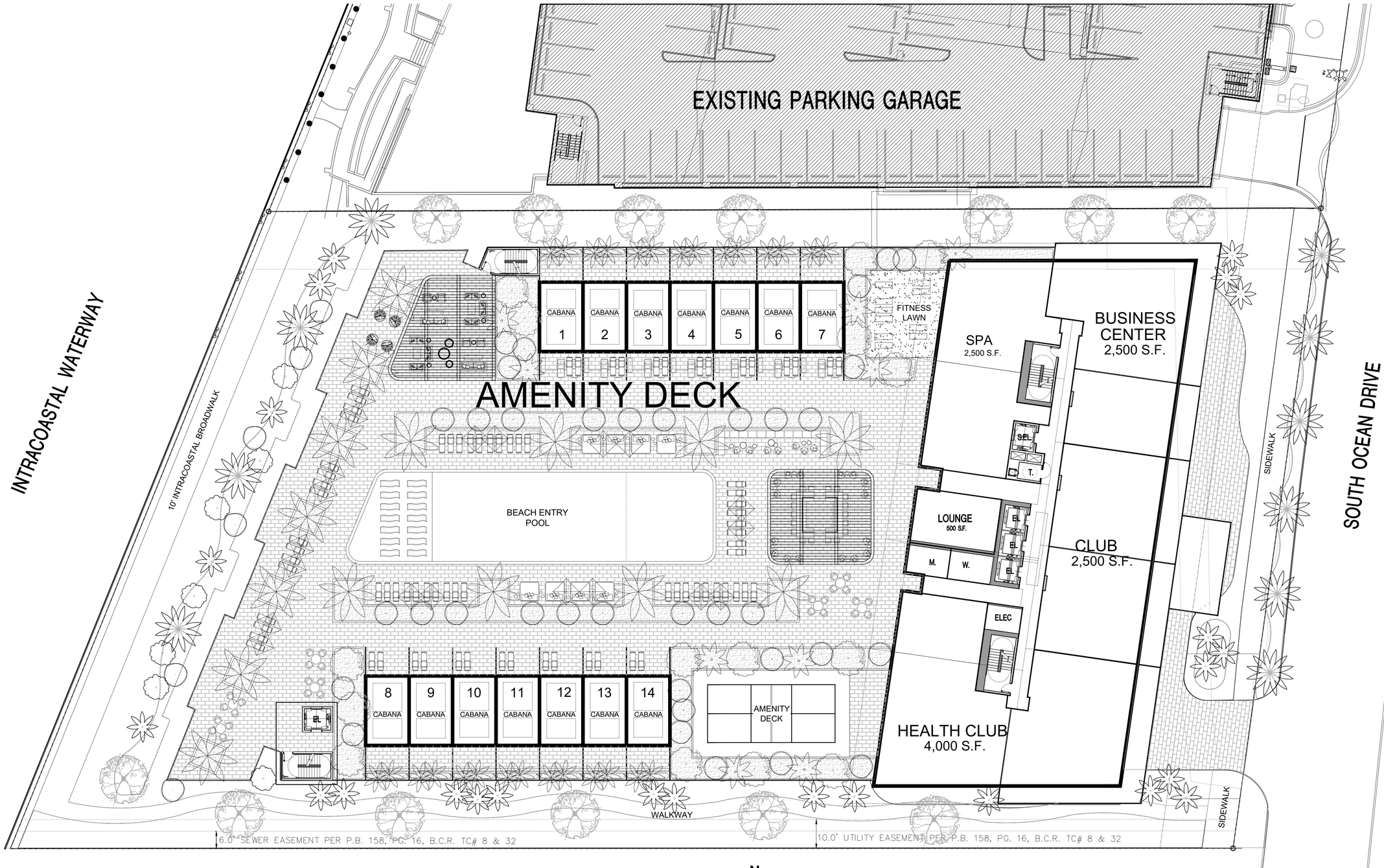

AMENITY LEVEL

LEVEL: 3 SCALE: 1/16" = 1'-0"

COHEN • FREEDMAN • ENCINOSA & ASSOC.
Architects, PA
8085 N.W. 155th Street Miami Lakes, Florida 33016 305·826·3999

DESIGN REVIEW
DIPLOMAT LANDING
3451-3690 SOUTH OCEAN DRIVE, HOLLYWOOD, FL
SITE PLAN / DATA TABLE

revisions:

drawn by: LF/SP/JG/AB
date: 03/09/2023
sheet no: A2.2
project: 3908

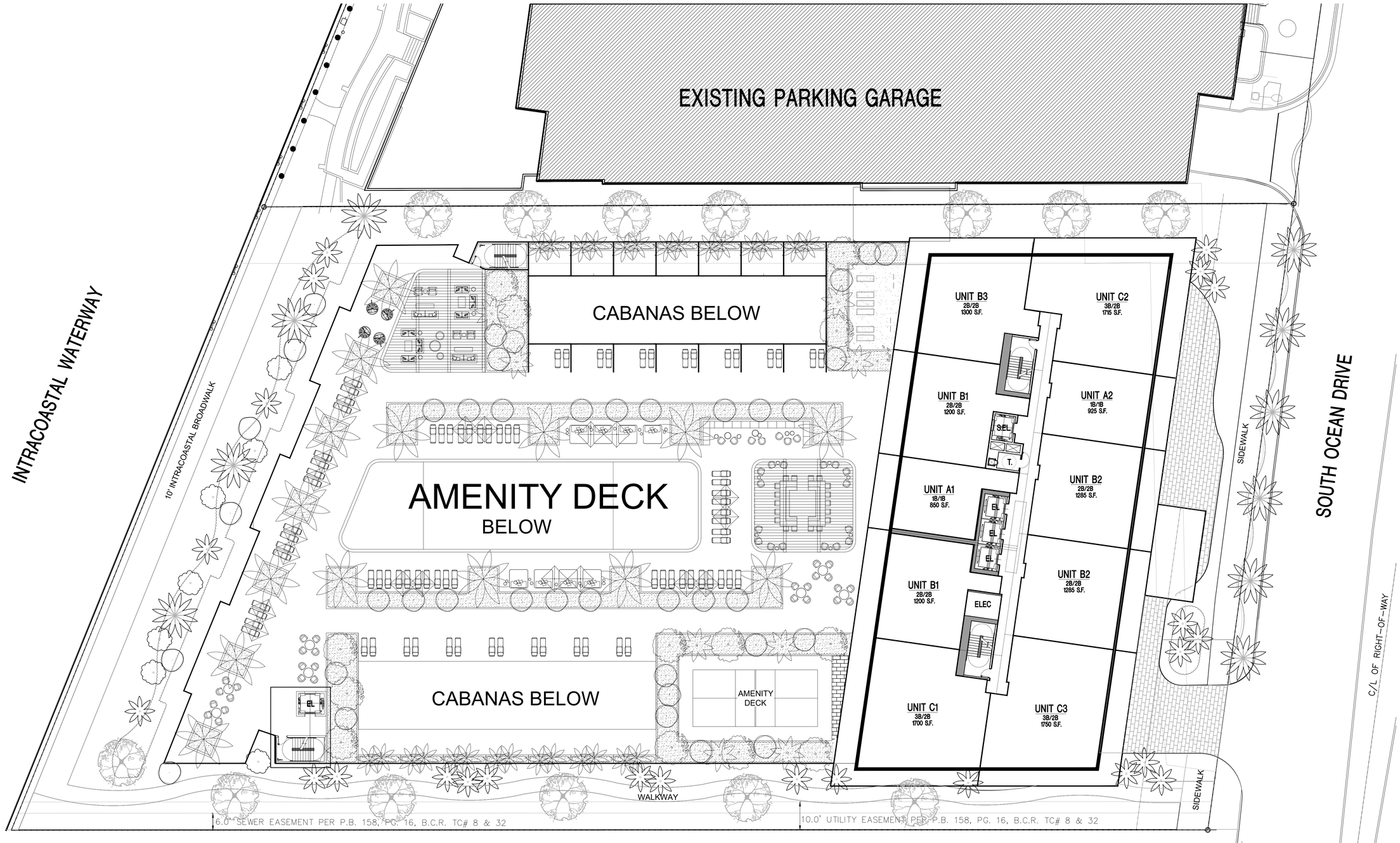

TOWER LEVELS

LEVELS: 4-37 SCALE: 1/16" = 1'-0"

COHEN • FREEDMAN • ENCINOSA & ASSOC.
Architects, PA
8085 N.W. 155th Street Miami Lakes, Florida 33016 305·826·3999

DESIGN REVIEW
DIPLOMAT LANDING
3451-3690 SOUTH OCEAN DRIVE, HOLLYWOOD, FL
SITE PLAN / DATA TABLE

revisions:

drawn by: LF/BP/JG/AB

date: 03/09/2023

sheet no: A2.3

project: 3908

UNIT C2
3B/2.5B
1745 S.F.

UNIT B1
2B/2B
1195 S.F.

UNIT A1
1B/1B
890 S.F.

UNIT B1
2B/2B
1195 S.F.

UNIT B3
2B/2B
1300 S.F.

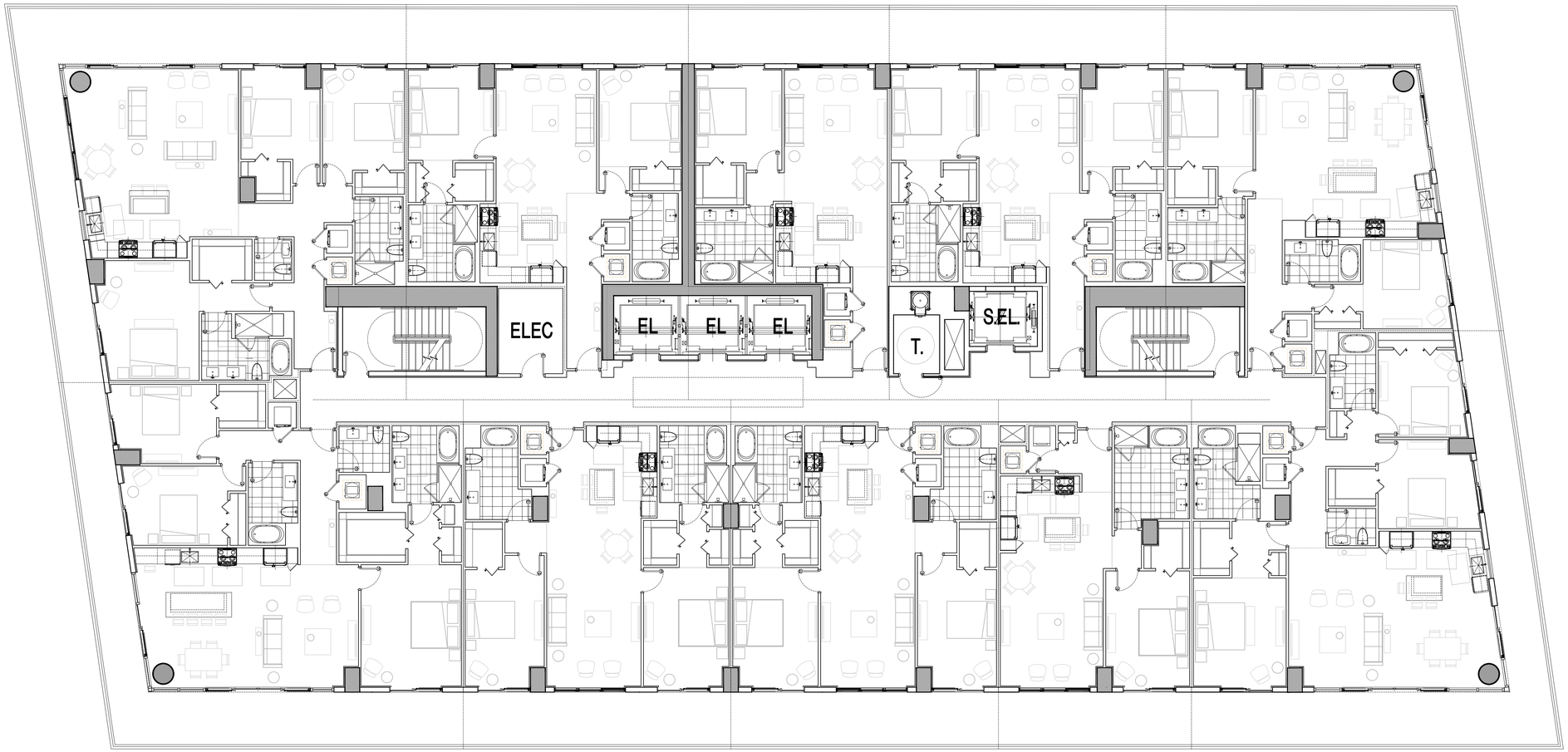

UNIT C3
3B/2.5B
1750 S.F.

UNIT B2
2B/2B
1295 S.F.

UNIT B2
2B/2B
1295 S.F.

UNIT A2
1B/1B
925 S.F.

UNIT C1
3B/2.5B
1675 S.F.

TYPICAL LEVEL PLAN

SCALE: 1/8" = 1'-0"

COHEN • FREEDMAN • ENCINOSA & ASSOC.
Architects, PA
8085 N.W. 155th Street Miami Lakes, Florida 33016 305·826·3999

DESIGN REVIEW
DIPLOMAT LANDING
3451-3690 SOUTH OCEAN DRIVE, HOLLYWOOD, FL
SITE PLAN / DATA TABLE

revisions:

drawn by: LF/SP/JG/AB
date: 03/09/2013
sheet no: A2.4
project: 3908

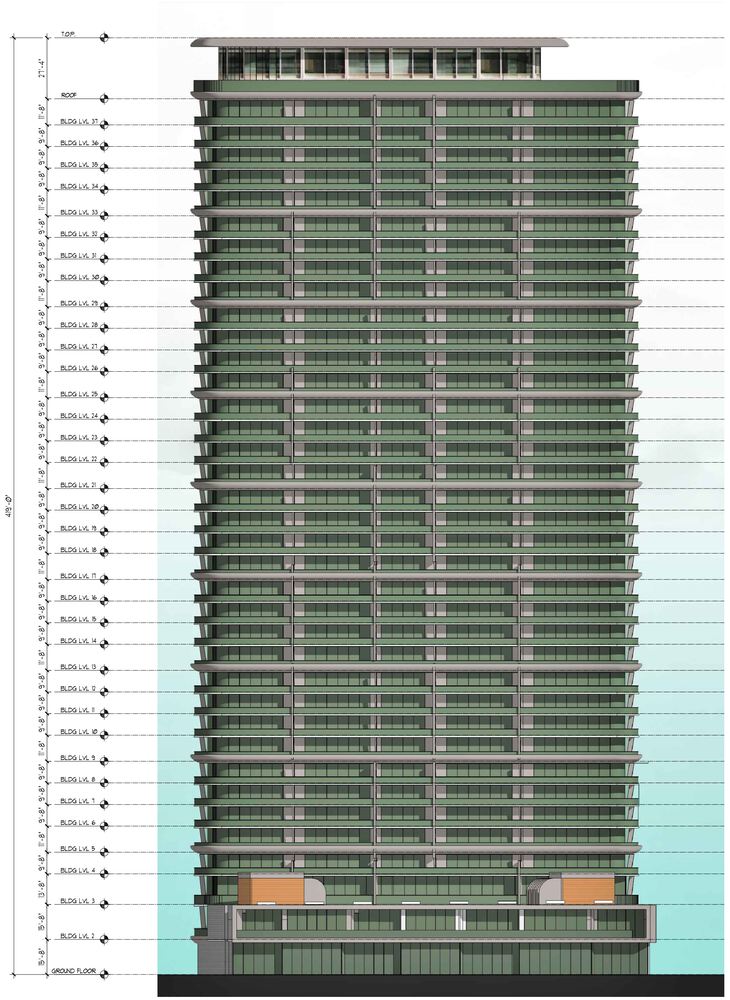

WEST ELEVATION

SCALE: 1/32"=1'

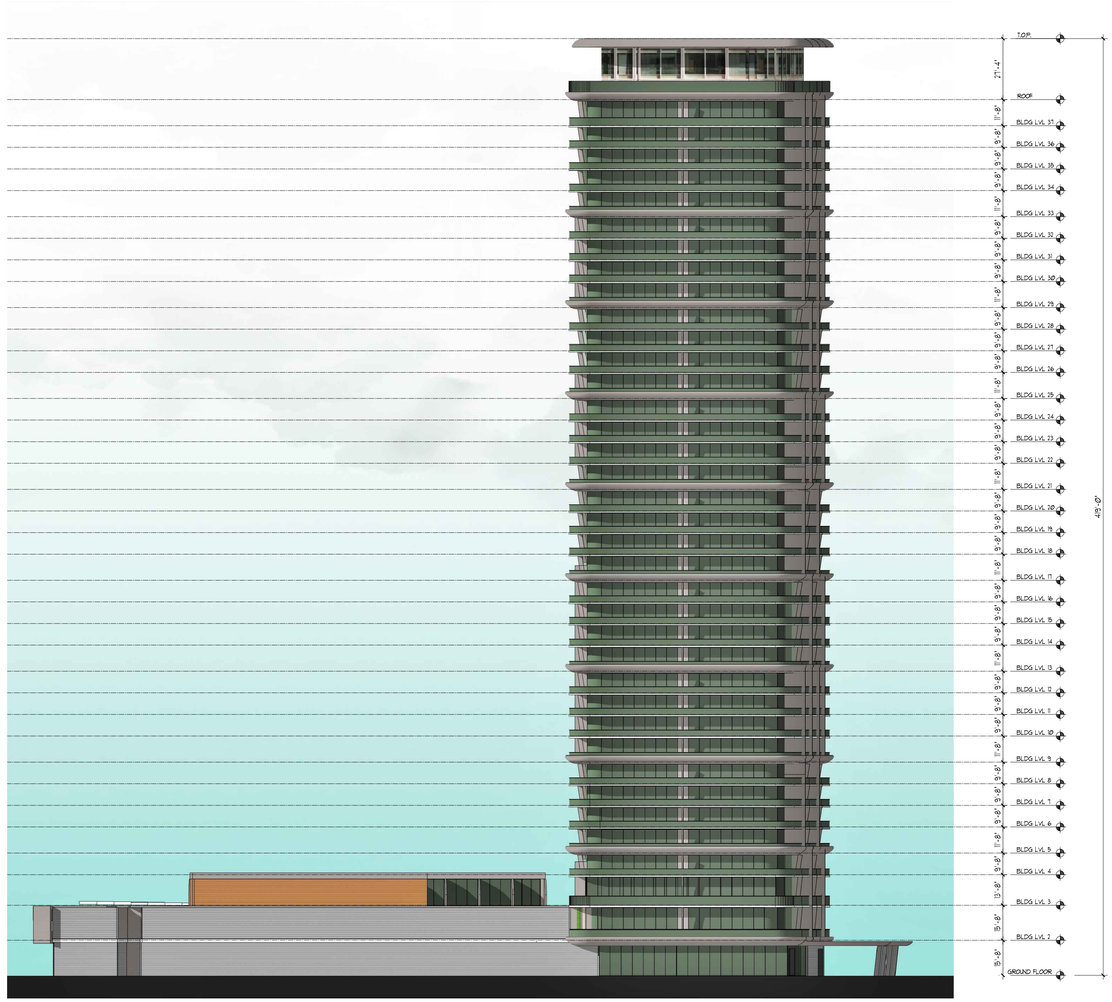

SOUTH ELEVATION

SCALE: 1/32"=1'

COHEN • FREEDMAN • ENCINOSA & ASSOC.
Architects, PA
8085 N.W. 155th Street Miami Lakes, Florida 33016 305·826·3999

DESIGN REVIEW
DIPLOMAT LANDING
3451-3690 SOUTH OCEAN DRIVE, HOLLYWOOD, FL

ELEVATIONS

revisions:

drawn by: LF/SP/JG/AB

date: 03/09/2023

sheet no: A4.0

project: 3908



EAST ELEVATION

SCALE: 1/32"=1'

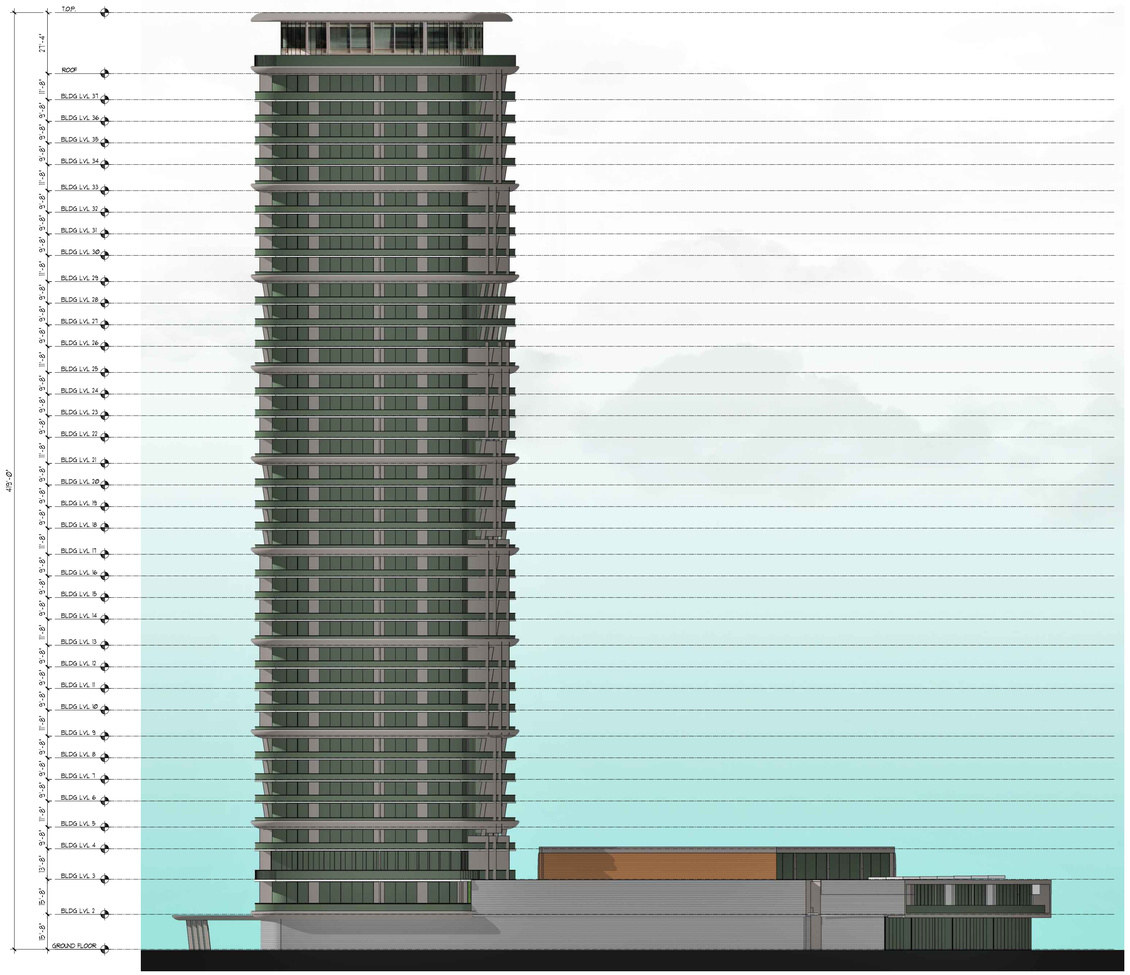

NORTH ELEVATION

SCALE: 1/32"=1'

COHEN • FREEDMAN • ENCINOSA & ASSOC.
Architects, PA
8085 N.W. 155th Street Miami Lakes, Florida 33016 305·826·3999

DESIGN REVIEW

DIPLOMAT LANDING

3451-3690 SOUTH OCEAN DRIVE, HOLLYWOOD, FL

ELEVATIONS

revisions:

drawn by: LF/SP/JG/AB

date: 03/09/2023

sheet no: A4.1

project: 3908

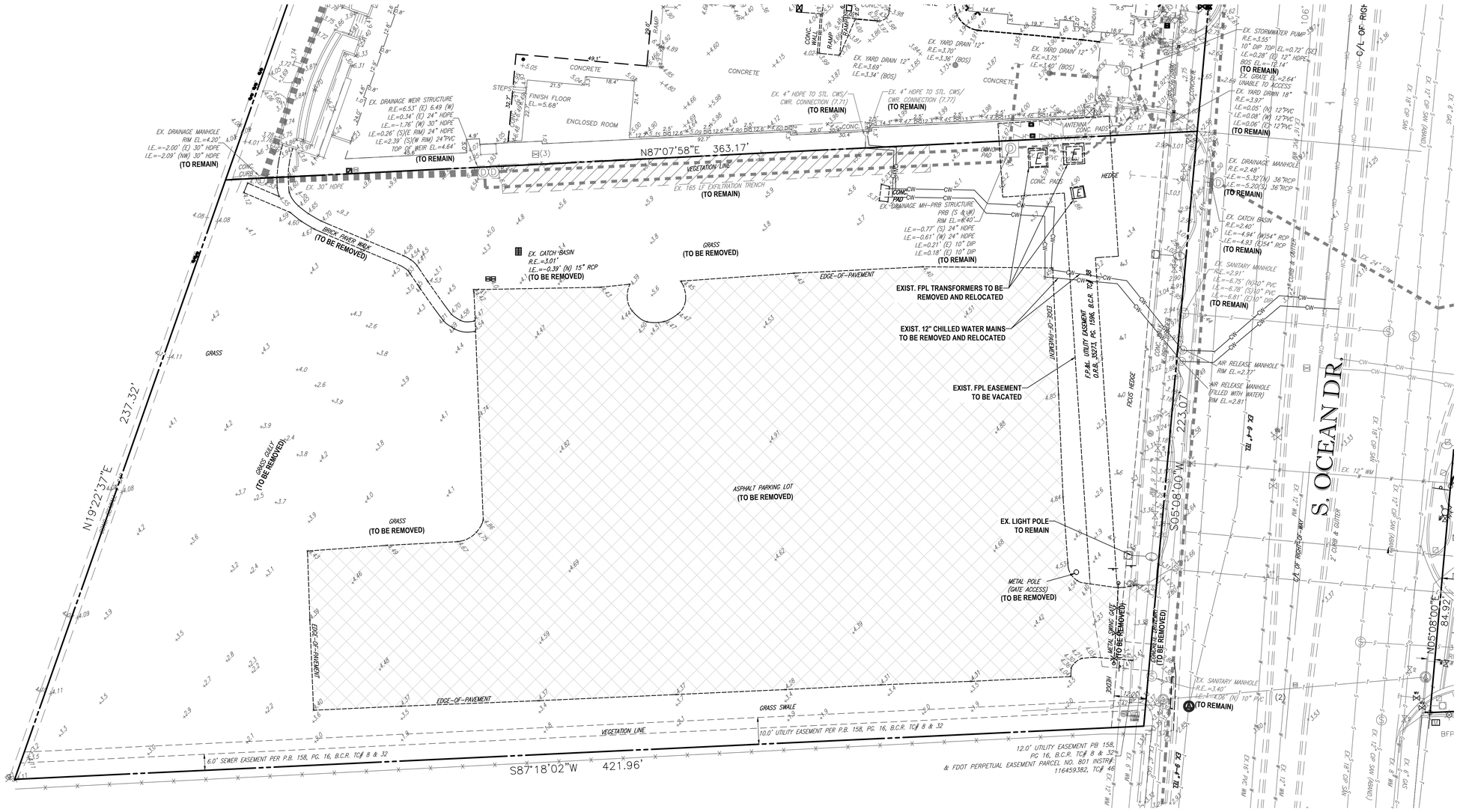
N87°07'58"E 363.17'
VEGETATION LINE
EX. 165 FT EXPLORATION TRENCH (TO REMAIN)
EX. DRAINAGE WEIR STRUCTURE R.E.=6.53' (E) 6.49 (W) I.E.=0.34' (E) 24" HDPE I.E.=-1.76' (W) 30" HDPE I.E.=0.26' (S)(E RIM) 24" HDPE I.E.=2.39' (S)(W RIM) 24"PVC TOP OF WEIR EL=4.64' (TO REMAIN)
EX. DRAINAGE MANHOLE RIM EL=4.20' I.E.=-2.00' (E) 30" HDPE I.E.=-2.09' (NW) 30" HDPE (TO REMAIN)
EX. 30" HDPE
BRICK PAVER WALK (TO BE REMOVED)
EX. CATCH BASIN R.E.=3.01' I.E.=-0.39' (N) 15" RCP (TO BE REMOVED)
GRASS (TO BE REMOVED)
EDGE-OF-PAVEMENT
GRASS
GRASS GULLY (TO BE REMOVED)
ASPHALT PARKING LOT (TO BE REMOVED)
GRASS (TO BE REMOVED)
EDGE-OF-PAVEMENT
EDGE-OF-PAVEMENT
GRASS SWALE
VEGETATION LINE
6.0' SEWER EASEMENT PER P.B. 158, PG. 16, B.C.R. TC# 8 & 32
S87°18'02"W 421.96'
N19°22'37"E 237.32'
STEPS
FINISH FLOOR EL.=5.68'
ENCLOSED ROOM
CONCRETE
CONC. RAMP
EX. 4" HDPE TO STL. CWS/ CWR. CONNECTION (7.71) (TO REMAIN)
EX. DRAINAGE MH-PRB STRUCTURE PRB (S & W) RIM EL=8.40' I.E.=-0.77' (S) 24" HDPE I.E.=-0.61' (W) 24" HDPE I.E.=0.21' (E) 10" DIP I.E.=0.18' (E) 10" DIP (TO REMAIN)
EX. YARD DRAIN 12" R.E.=3.70' I.E.=3.36' (BOS)
EX. YARD DRAIN 12" R.E.=3.73' I.E.=3.40' (BOS)
EX. YARD DRAIN 12" R.E.=3.69' I.E.=3.34' (BOS)
EX. STORMWATER PUMP R.E.=3.55' 10" DIP TOP EL=0.72' (SC) I.E.=0.28' (E) 12" HDPE BOS EL=-10.14' (TO REMAIN)
EX. GRATE EL.=2.64' UNABLE TO ACCESS
EX. YARD DRAIN 18" R.E.=3.57' I.E.=0.05' (N) 12"PVC I.E.=0.08' (W) 12"PVC I.E.=0.09' (S) 12"PVC (TO REMAIN)
EX. DRAINAGE MANHOLE R.E.=2.48' I.E.=-5.32'(N) 36"RCP I.E.=-5.20'(S) 36"RCP (TO REMAIN)
EX. CATCH BASIN R.E.=2.40' I.E.=-4.94' (W)54" RCP I.E.=-4.93 (S)54" RCP (TO REMAIN)
EX. SANITARY MANHOLE R.E.=2.91' I.E.=-6.75' (N)10" PVC I.E.=-6.78' (S)10" PVC I.E.=-6.81' (E)10" PVC (TO REMAIN)
AIR RELEASE MANHOLE RIM EL.=2.77'
AIR RELEASE MANHOLE (FILLED WITH WATER) RIM EL=2.81
EX. 12" WM
EX. 24" STM
EX. 6"-FM
EX. 12" FM
EX. 8" WS
EX. 4" WS
EX. 2" WS
EX. 6" WS
EX. 12" WS
EX. 16" WS
EX. 20" WS
EX. 24" WS
EX. 30" WS
EX. 36" WS
EX. 42" WS
EX. 48" WS
EX. 54" WS
EX. 60" WS
EX. 72" WS
EX. 84" WS
EX. 96" WS
EX. 108" WS
EX. 120" WS
EX. 132" WS
EX. 144" WS
EX. 156" WS
EX. 168" WS
EX. 180" WS
EX. 192" WS
EX. 204" WS
EX.

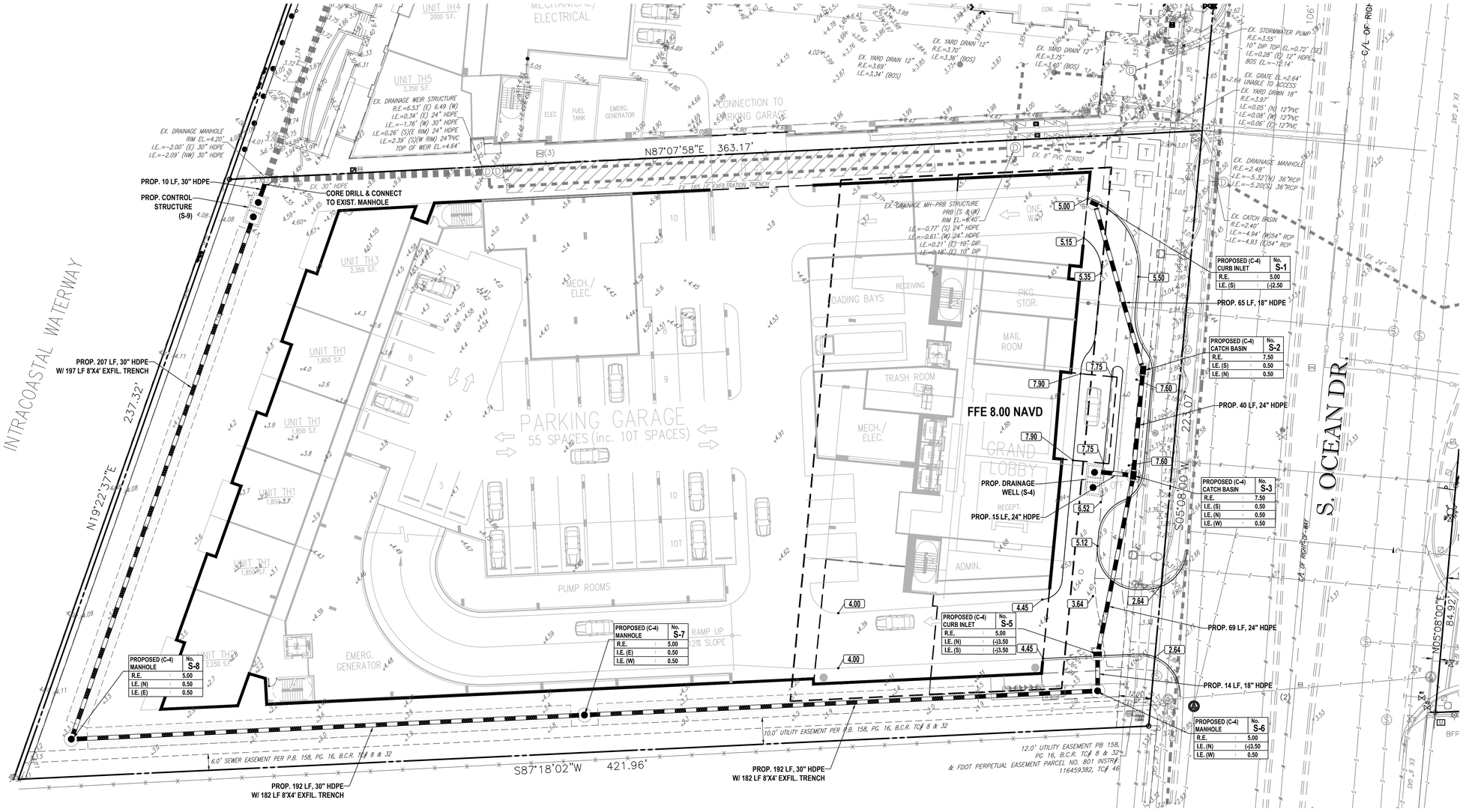

HATCH LEGEND

PROPOSED CONCRETE

EXISTING CONCRETE

PROPOSED ASPHALT PAVEMENT

ALL ELEVATIONS ARE BASED ON NORTH AMERICAN VERTICAL DATUM OF 1988 (NAVD 88). CONVERSION FROM NAVD TO NGVD IS (+) 1.50', I.E. 11.50 NAVD = 13.00 NGVD.

CONSTRUCTION NOTES:

1. CONTRACTOR TO SAW-CUT AT ALL LOCATIONS OF REMOVAL OF EXISTING CONC. SIDEWALK, CONC. CURB AND ASPHALT UNLESS OTHERWISE NOTED. ALL BASE AND SUBASE MATERIAL SHALL BE REMOVED WITHIN THE PROPOSED LANDSCAPED AREA.
2. CONTRACTOR TO MATCH EXIST. GRADES AND TO CONSTRUCT A SMOOTH TRANSITION FROM EXISTING FACILITIES TO PROPOSED.
3. CONTRACTOR TO REMOVE ALL CONSTRUCTION DEBRIS FROM CONSTRUCTION SITE AND DISPOSE PER LOCAL ORDINANCES.
4. CONTRACTOR TO ENSURE ALL CONSTRUCTION IS IN ACCORDANCE WITH CITY DESIGN STANDARDS.
5. CONTRACTOR TO SOD ALL DISTURBED AREAS, SODDING INCLUDES MAINTAINING SLOPE AND SOD UNTIL COMPLETION AND ACCEPTANCE OF THE TOTAL PROJECT OR GROWTH IS ESTABLISHED WHICHEVER COMES LAST.
6. ALL EXISTING TRAFFIC SIGNS DISTURBED DURING CONSTRUCTION SHALL BE REINSTALLED WHERE APPLICABLE BY THE CONTRACTOR.
7. THESE PLANS REFLECT CONDITIONS KNOWN DURING PLAN DEVELOPMENT. IN THE EVENT THAT ACTUAL PHYSICAL CONDITIONS PREVENT THE APPLICATION OF THESE STANDARDS OR THE PROGRESSION OF THE WORK, THE CONTRACTOR SHALL NOTIFY THE ENGINEER PRIOR TO CONSTRUCTION OF AFFECTED AREA.
8. THE CONTRACTOR SHALL PROTECT ALL EXISTING STRUCTURES, STORM DRAINS, UTILITIES, AND OTHER FACILITIES TO REMAIN AND SHALL REPAIR ANY DAMAGES DUE TO HIS/HER CONSTRUCTION ACTIVITIES AT NO ADDITIONAL COST TO THE OWNER.
9. NOTIFY SUNSHINE STATE ONE CALL (1-800-432-4770) OR (811) PRIOR TO CONSTRUCTION.
10. PROJECT BASED ON DESIGN SURVEY PREPARED BY OTHERS.
11. THE CONTRACTOR SHALL NOT ENCROACH ONTO PRIVATE PROPERTY WITHOUT EASEMENTS NECESSARY FOR COMPLETION OF THE WORK.
12. THE EXISTING UNDERGROUND UTILITIES SHOWN ARE PER ABOVE GROUND SURVEY DATA AND UTILITY AS-BUILT DATA. THIS INFORMATION DOES NOT WARRANT EXACT SIZE AND LOCATION OF THE UTILITIES. ALSO, THERE MAY BE ADDITIONAL UTILITIES WITHIN THE LIMITS OF CONSTRUCTION THAT MAY BE AFFECTED. CONTRACTOR SHALL BE RESPONSIBLE FOR MAINTAINING AND PROTECTING EXISTING UTILITIES DURING THE COURSE OF CONSTRUCTION.
13. PLEASE SEE MEP PLANS FOR CONTINUATION OF ROOF LEADERS.
14. 2.0% MAXIMUM SLOPE ON HANDICAP SPACES AND ADA ACCESS WAYS.
15. ALL SIDEWALKS SHOULD HAVE A MAXIMUM CROSS SLOPE OF 1.5%.
16. EXISTING COVER MUST BE MAINTAINED ON ALL WATER AND SANITARY LINES.
17. EXISTING SEWER MUST REMAIN FREE FROM CONSTRUCTION DEBRIS AND FLOW MUST BE MAINTAINED.
18. NO STRUCTURES SHALL BE ALLOWED IN UTILITY EASEMENT.
19. SIZE, GRADES, AND LOCATION FOR DRIVEWAY CULVERTS SHALL BE DETERMINED BY THE ENGINEERING DEPT.
20. ALL UNSTABLE MATERIALS SUCH AS MUCK, PEAT, PLASTIC CLAYS, AND/OR MARLS SHALL BE REMOVED FROM ROADBED AREAS. THE AREA SHALL THEN BE BACKFILLED ACCORDING TO THE GEOTECH REPORT.

PAVING, GRADING & DRAINAGE LEGEND

EXISTING		PROPOSED
SL	SANITARY SEWER LATERAL	SL
W	UNDERGROUND WATER LINE	W
E	UNDERGROUND ELECTRIC LINE	
G	UNDERGROUND GAS LINE	
OH	OVERHEAD WIRE	
T	UNDERGROUND TELEPHONE LINE	
C	UNDERGROUND CABLE LINE	
RW	UNDERGROUND RECLAIMED WATER LINE	
	STORM SEWER	
	STORM SEWER EXFILTRATION TRENCH	
S	SANITARY SEWER MAIN	S
	HYDRANT	
	SANITARY MANHOLE	
	STORM MANHOLE	
	CATCH BASIN	
XX.XX	GRADE SPOT SHOT	XX.XX

THOMAS ENGINEERING GROUP
CIVIL ENGINEERS · PROJECT MANAGERS · LAND PLANNING · LANDSCAPE ARCHITECTS
1502 W. FLETCHER AVE. UNIT NO. 101 TAMPA, FL 33612 P: (813) 379-4100
125 W. INDIANTOWN RD. SUITE 206 JUPITER, FL 33458 P: 561 203-7503
THE INFORMATION, DESIGN, AND CONTENT OF THIS PLAN ARE PROPRIETARY AND SHALL NOT BE COPIED, IN WHOLE OR IN PART, OR USED FOR ANY PURPOSE WITHOUT PRIOR WRITTEN AUTHORIZATION FROM THOMAS ENGINEERING GROUP, LLC. ONLY APPROVED, SIGNED AND SEALED PLANS SHALL BE UTILIZED FOR CONSTRUCTION PURPOSES. UNAUTHORIZED USE OF THESE PLANS MAY RESULT IN LEGAL ACTION.

REVISIONS:

REV:	DATE:	COMMENT:	BY:

Sunshine 811
Call 811 or visit sunshine811.com two full business days before digging to have buried facilities located and marked.
Check positive response codes before you dig!

PROJECT No.:	F220134
DRAWN BY:	CAD
CHECKED BY:	MAT
DATE:	01/09/2023
CAD I.D.:	F220134-PRE-PGD

PROJECT:

PRELIMINARY SOUTH TOWER PLANS

FOR

THE RELATED GROUP

CITY OF HOLLYWOOD FLORIDA

THOMAS ENGINEERING GROUP
6300 NW 31ST AVENUE
FORT LAUDERDALE, FL 33309
PH: (954) 202-7000
FX: (954) 202-7070
www.ThomasEngineeringGroup.com

MICHAEL A. TROXELL
PROFESSIONAL ENGINEER
FLORIDA LICENSE No. 50572
March 10, 2023
FLORIDA BUSINESS CERT. OF AUTH. No. 27528

SHEET TITLE:

CONCEPTUAL PAVING GRADING & DRAINAGE PLAN

SHEET NUMBER:

PD-01

Printed on Friday, March 10, 2023, 11:29 AM by Cesar DeLaSantos
m:\projects\thomas\2021\th_trail\1_pre_pgd_____xx\xrefs\th-pd-01.dwg

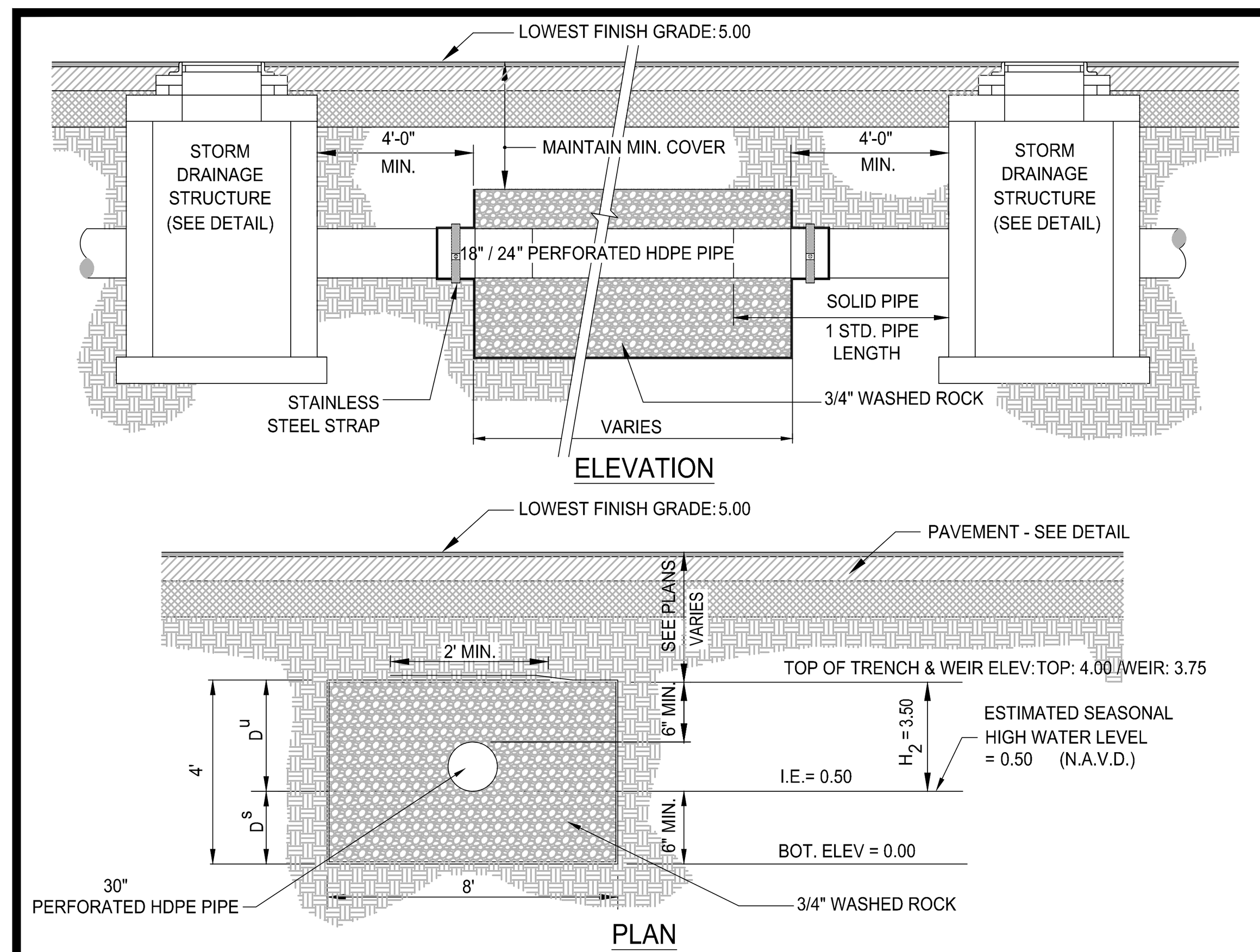

NOTES:

1. PIPES SHALL CONNECT TO ADDITIONAL CATCH BASINS AS REQUIRED.
2. BALLAST ROCK SHALL CONSIST OF 3/4" WASHED ROCK AND BE FROM FRESH WATER WASHED FREE OF DELETERIOUS MATTER.
3. TRENCH TO BE LINED WITH AMOCO PROPEX 4545 OR APPROVED EQUIVALENT TYPE FILTER FABRIC. OVERLAP TRENCH LINING MATERIAL A MINIMUM OF 2' AT TOP OF TRENCH. CLOSE ENDS AND STRAP AROUND PIPE.
4. IN AREAS OVER TRENCH WHERE THE FULL ROADWAY SECTION CANNOT BE CONSTRUCTED, THE AREA ABOVE THE TRENCH SHALL CONSIST ENTIRELY OF LIMEROCK BASE (LBR100).

1 EXFILTRATION TRENCH

SCALE: NONE

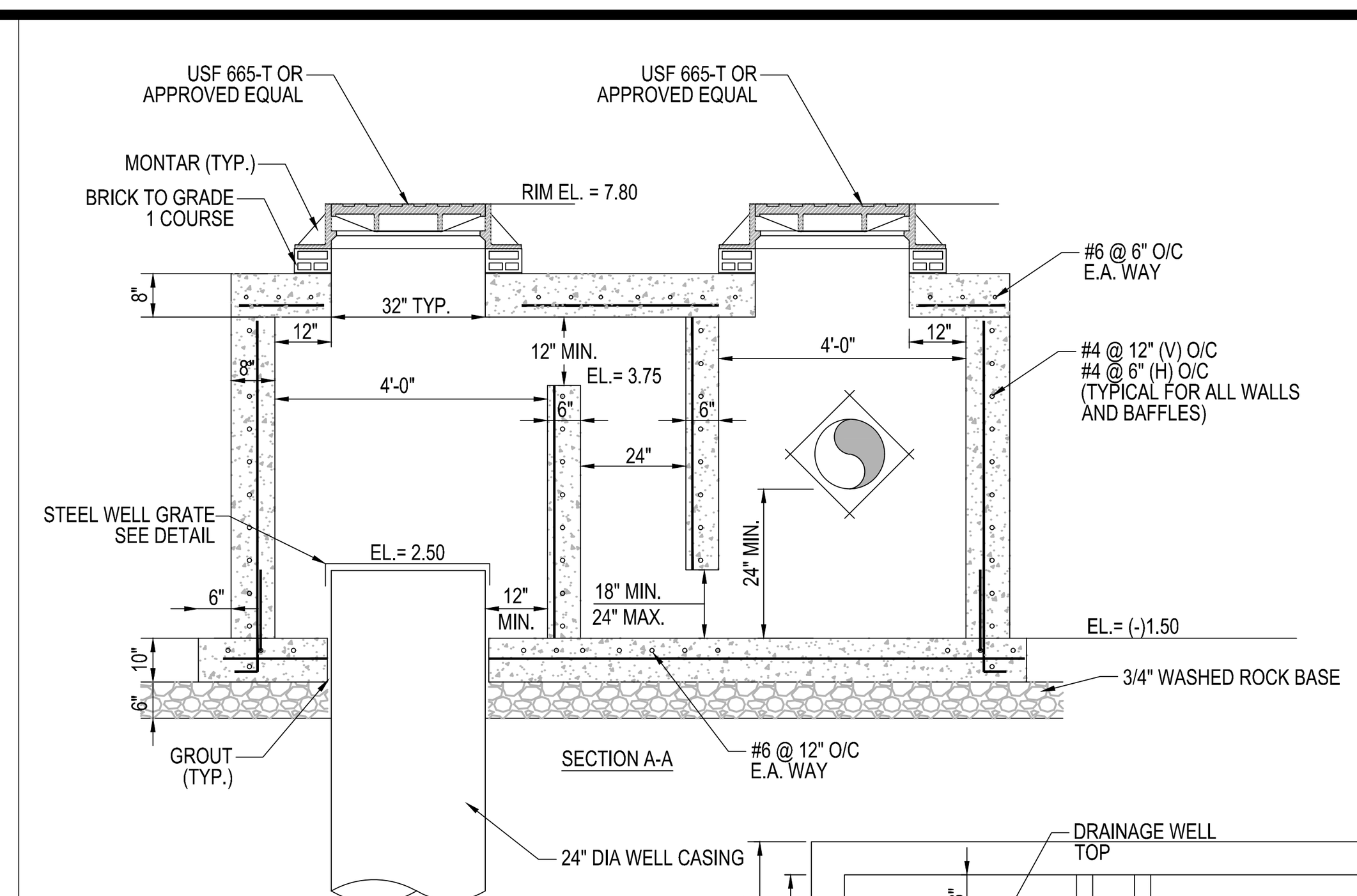

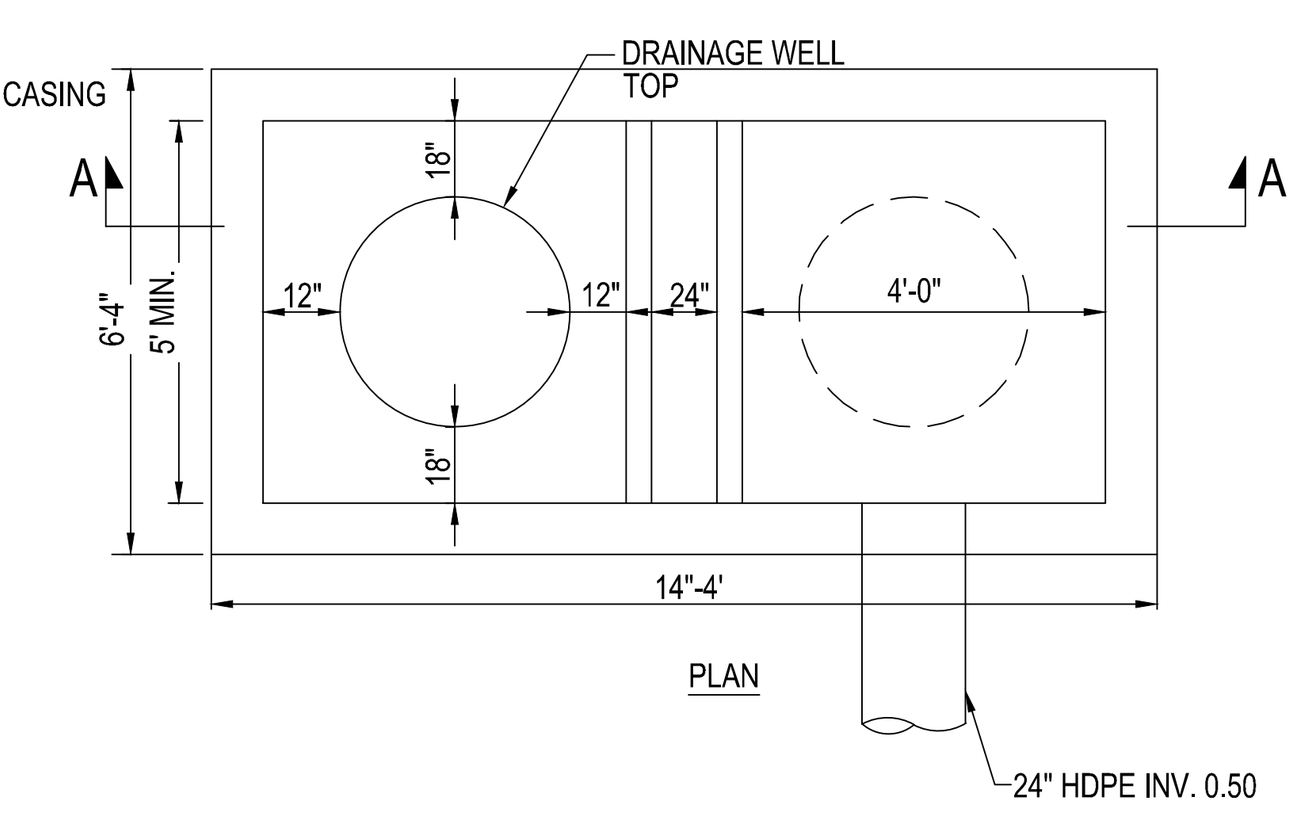

NOTES: DESIGN FLOW OF 350 GPM/FT - HEAD MUST BE ACHIEVED
2' OF HEAD ASSUMED TO OVERCOME DENSITY DIFFERENTIAL

1. 6'-4" X 14'-4" STORM MANHOLE PER U.S. PRECAST COMPANY
2. CONCRETE= 4000 PSI @ 28 DAYS.
3. HOLES FOR PIPING SHALL BE 6' LARGER THAT PIPE O.D. AND SHALL BE CAST AT TIME OF FABRICATION.
4. WATER TABLE ELEVATION= 1.50 (NAVD)
5. PROVIDE 4 ADDITIONAL (DIAGONAL) TYPE "D" REINFORCEMENT AROUND PIPE OPENING.
6. MANHOLE LIDS TO BE WATER TIGHT

2 DRAINAGE WELL DETAIL

SCALE: NONE

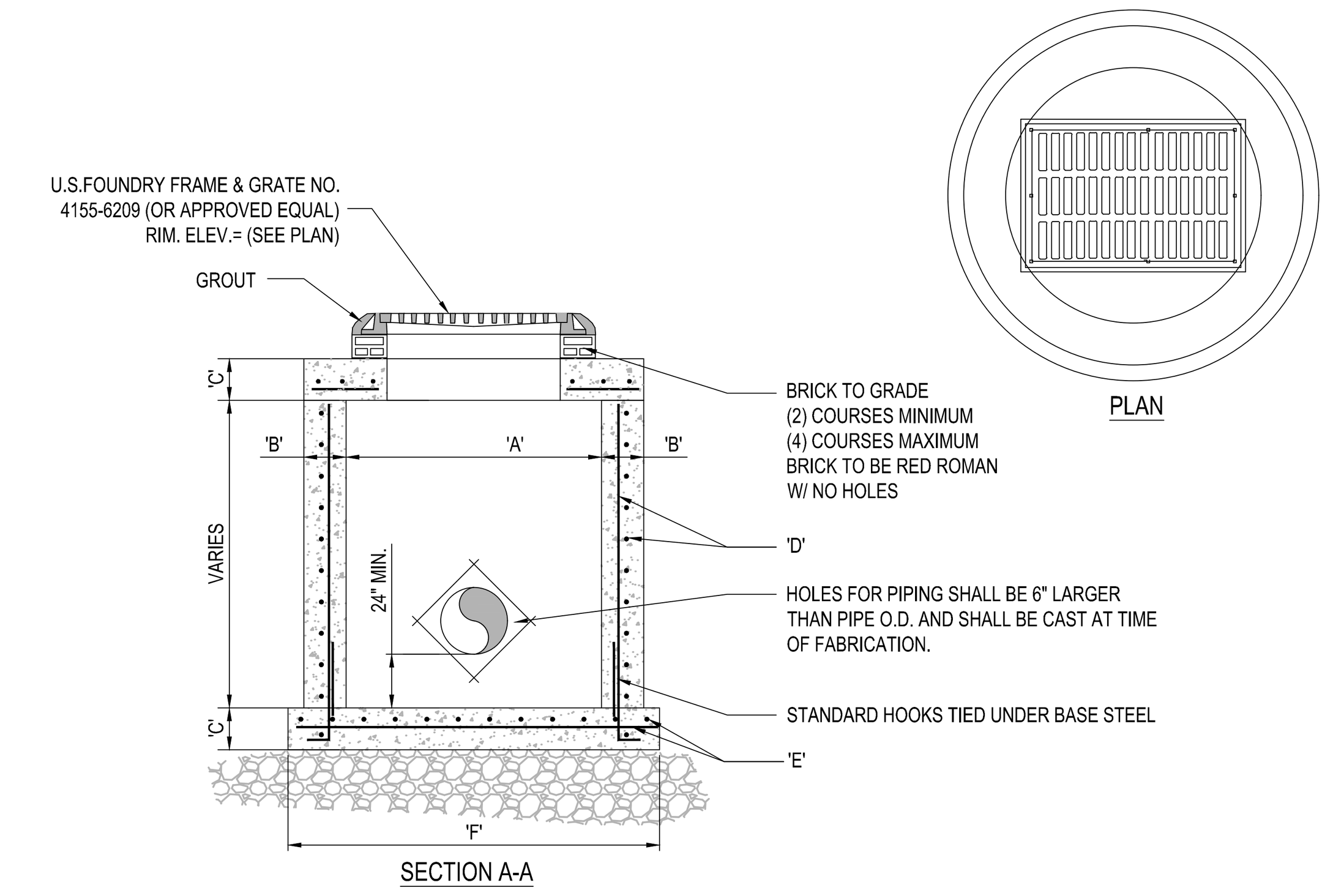

TYPE	"A"	"B"	"C"	"D"	"E"	"F"
C-4	4'-0" Ø	8"	8"	# 4 @ 12" C.C.E.W.	# 4 @ 12" C.C.E.W.	6'-4" Ø
C-5	5'-0" Ø	8"	8"	# 5 @ 12" C.C.E.W.	# 5 @ 12" C.C.E.W.	7'-4" Ø
C-6	6'-0" Ø	8"	8"	# 5 @ 12" C.C.E.W.	# 5 @ 6" C.C.E.W.	8'-4" Ø
C-7	7'-0" Ø	8"	8"	# 5 @ 12" C.C.E.W.	# 5 @ 6" C.C.E.W.	9'-4" Ø
C-8	8'-0" Ø	10"	10"	2- W.W.M. w/ # 4 @ 12" C.C. VERT	# 5 @ 6" C.C.E.W.	10'-8" Ø

3 PRECAST CIRCULAR CATCH BASIN

SCALE: NONE

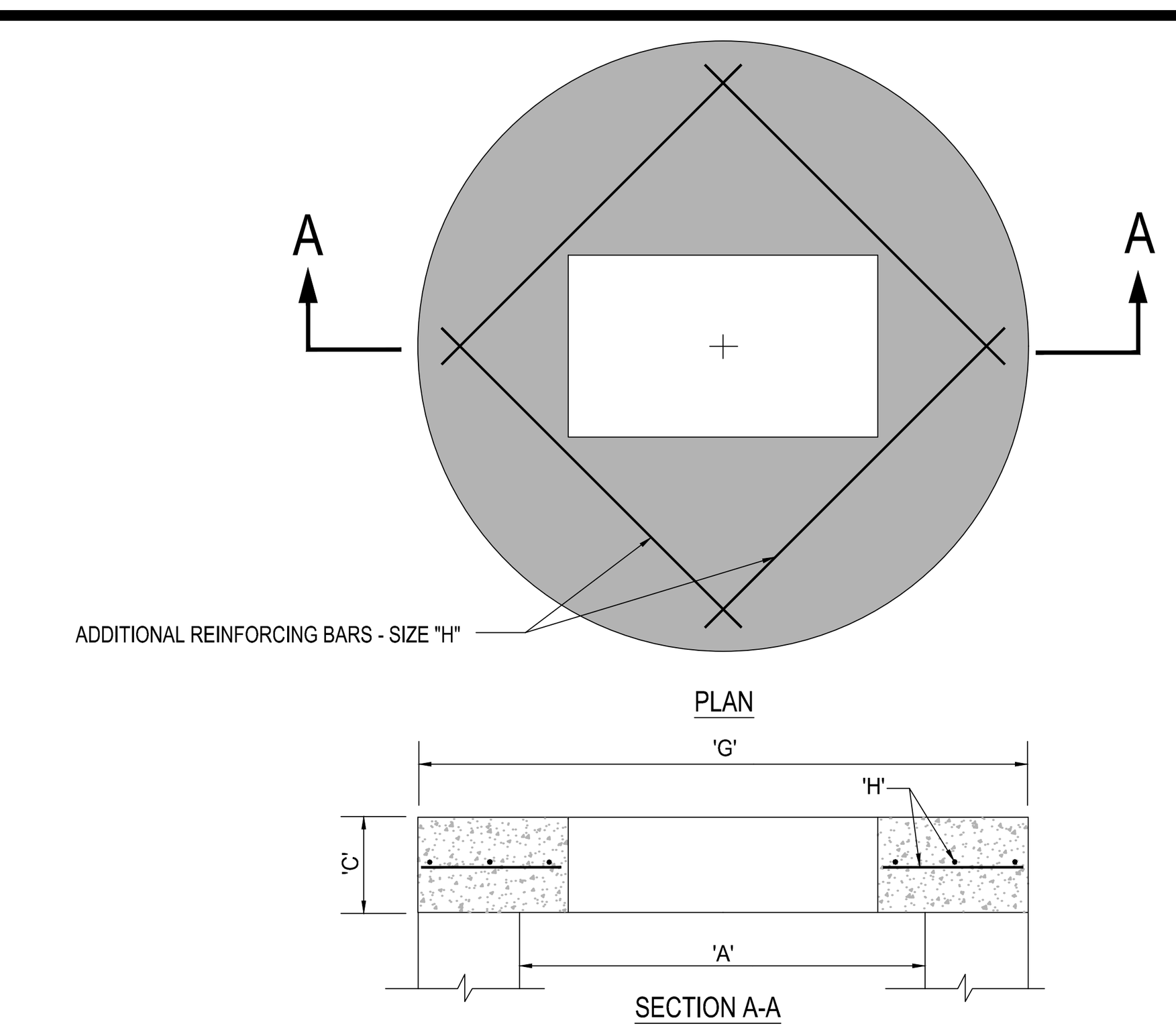

TYPE	"A"	"C"	"G"	"H"
C-4	4'-0" Ø	8"	5'-4" Ø	# 4 @ 6" C.C.E.W.
C-5	5'-0" Ø	8"	6'-4" Ø	# 5 @ 8" C.C.E.W.
C-6	6'-0" Ø	8"	7'-4" Ø	# 5 @ 6" C.C.E.W.
C-7	7'-0" Ø	8"	8'-4" Ø	# 5 @ 6" C.C.E.W.
C-8	8'-0" Ø	10"	9'-8" Ø	# 5 @ 6" C.C.E.W.

4 PRECAST CONCRETE-TOP SLAB

SCALE: NONE

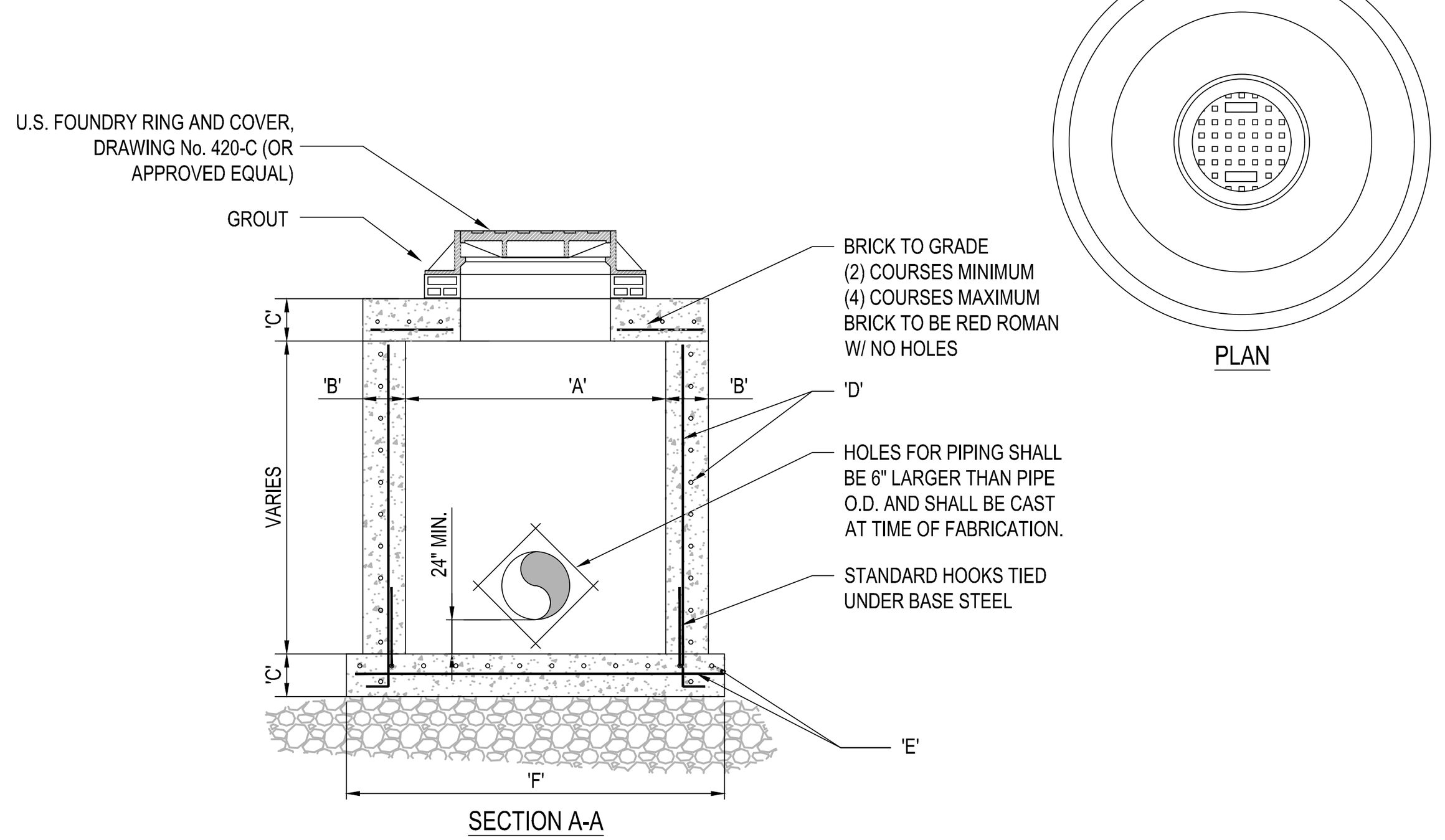

TYPE	"A"	"B"	"C"	"D"	"E"	"F"
M-4	4'-0" Ø	8"	8"	# 4 @ 12" C.C.E.W.	# 4 @ 12" C.C.E.W.	6'-4" Ø
M-5	5'-0" Ø	8"	8"	# 5 @ 12" C.C.E.W.	# 5 @ 12" C.C.E.W.	7'-4" Ø
M-6	6'-0" Ø	8"	8"	# 5 @ 12" C.C.E.W.	# 5 @ 6" C.C.E.W.	8'-4" Ø
M-7	7'-0" Ø	8"	8"	# 5 @ 12" C.C.E.W.	# 5 @ 6" C.C.E.W.	9'-4" Ø
M-8	8'-0" Ø	10"	10"	2- W.W.M. w/ 4 # @ 12" C.C. VERT	# 5 @ 6" C.C.E.W.	10'-8" Ø

5 PRECAST CIRCULAR DRAINAGE MANHOLE

SCALE: NONE

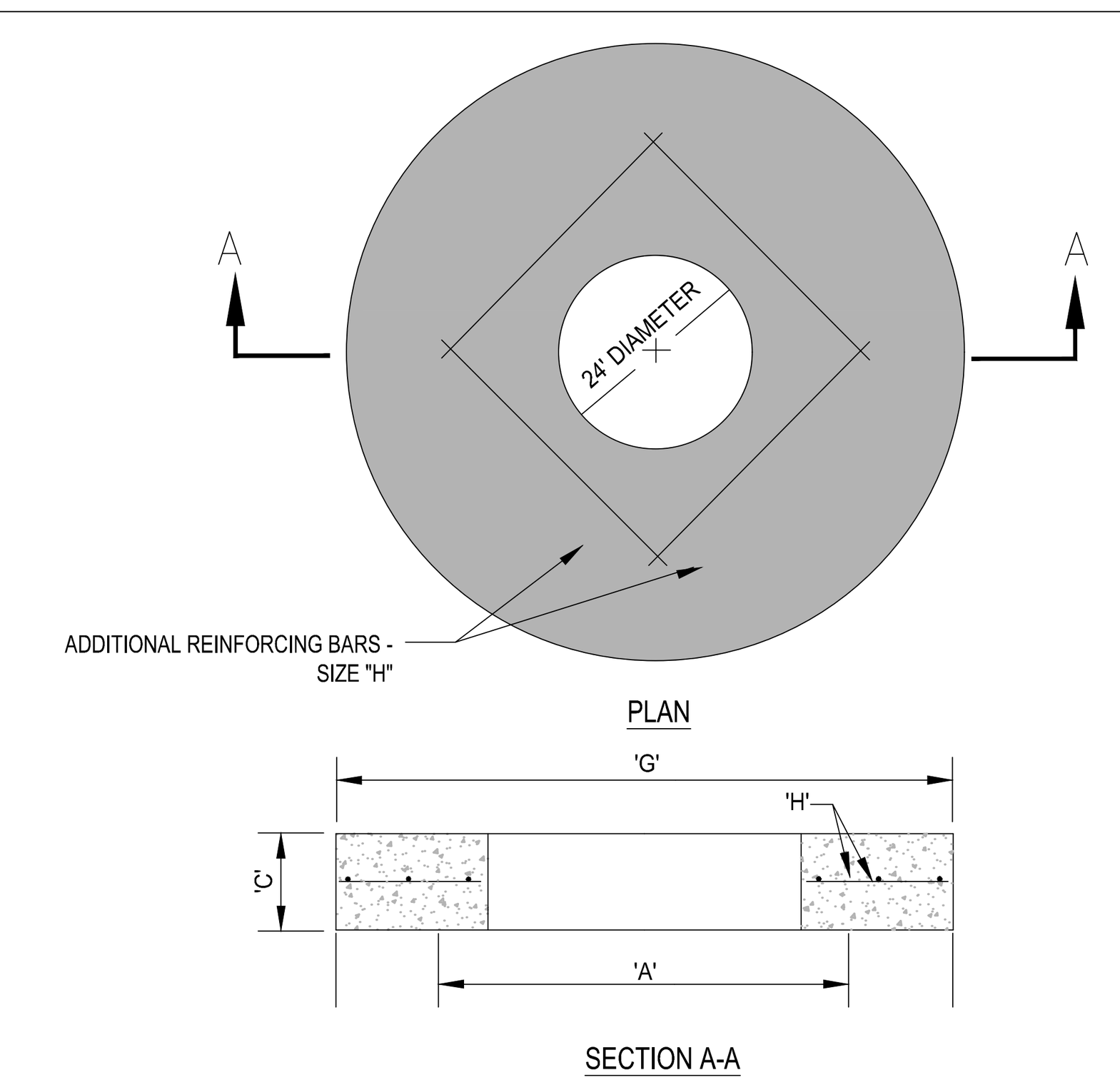

TYPE	"A"	"C"	"G"	"H"
M-4	4'-0" Ø	8"	5'-4" Ø	# 4 @ 6" C.C.E.W.
M-5	5'-0" Ø	8"	6'-4" Ø	# 5 @ 8" C.C.E.W.
M-6	6'-0" Ø	8"	7'-4" Ø	# 5 @ 6" C.C.E.W.
M-7	7'-0" Ø	8"	8'-4" Ø	# 5 @ 6" C.C.E.W.
M-8	8'-0" Ø	10"	9'-8" Ø	# 5 @ 6" C.C.E.W.

6 PRECAST CONCRETE-TOP SLAB FOR DRAINAGE MANHOLES

SCALE: NONE

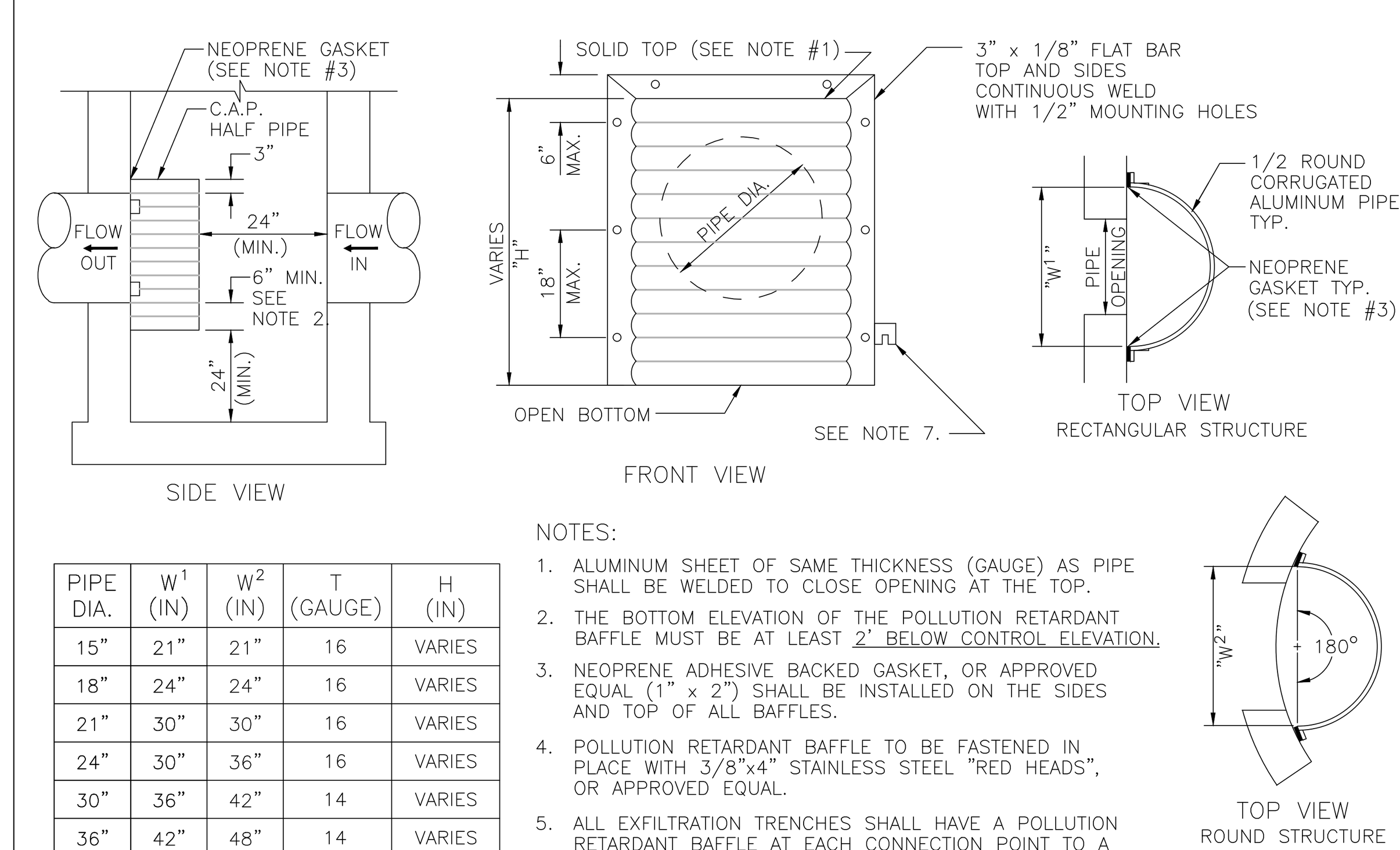

PIPE DIA.	W[1] (IN)	W[2] (IN)	T (GAUGE)	H (IN)
15"	21"	21"	16	VARIES
18"	24"	24"	16	VARIES
21"	30"	30"	16	VARIES
24"	30"	36"	16	VARIES
30"	36"	42"	14	VARIES
36"	42"	48"	14	VARIES
42"	48"	54"	14	VARIES
48"	54"	60"	14	VARIES
54"	60"	66"	14	VARIES

1. RECTANGULAR STRUCTURE
2. ROUND STRUCTURE

NOTES:

1. ALUMINUM SHEET OF SAME THICKNESS (GAUGE) AS PIPE SHALL BE WELDED TO CLOSE OPENING AT THE TOP.
2. THE BOTTOM ELEVATION OF THE POLLUTION RETARDANT BAFFLE MUST BE AT LEAST 2' BELOW CONTROL ELEVATION.
3. NEOPRENE ADHESIVE BACKED GASKET, OR APPROVED EQUAL (1" x 2") SHALL BE INSTALLED ON THE SIDES AND TOP OF ALL BAFFLES.
4. POLLUTION RETARDANT BAFFLE TO BE FASTENED IN PLACE WITH 3/8"x4" STAINLESS STEEL "RED HEADS", OR APPROVED EQUAL.
5. ALL EXFILTRATION TRENCHES SHALL HAVE A POLLUTION RETARDANT BAFFLE AT EACH CONNECTION POINT TO A STRUCTURE (SEE EXFILTRATION TRENCH DETAIL).
6. FIBERGLASS BAFFLES ARE NOT PERMITTED.
7. MOUNTING BRACKETS MAY BE ADDED TO FLAT BARS TO EASE INSTALLATION IN ROUND STRUCTURES. SPACING TO MATCH HOLES IN FLAT BARS.

7 POLLUTION RETARDENT BAFFLE DETAIL

SCALE: NONE

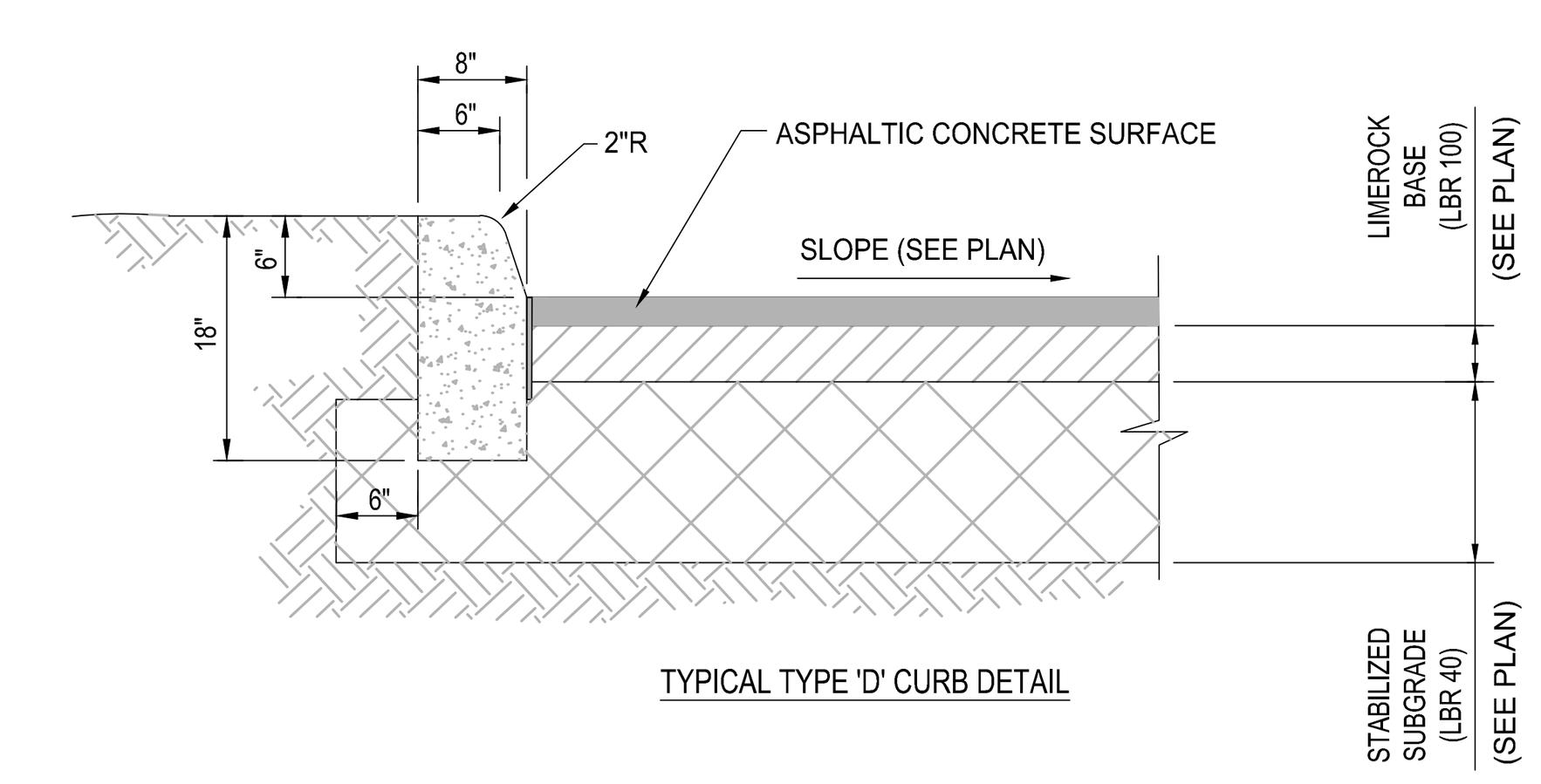

8 TYPE 'D' CURB DETAIL

SCALE: NONE

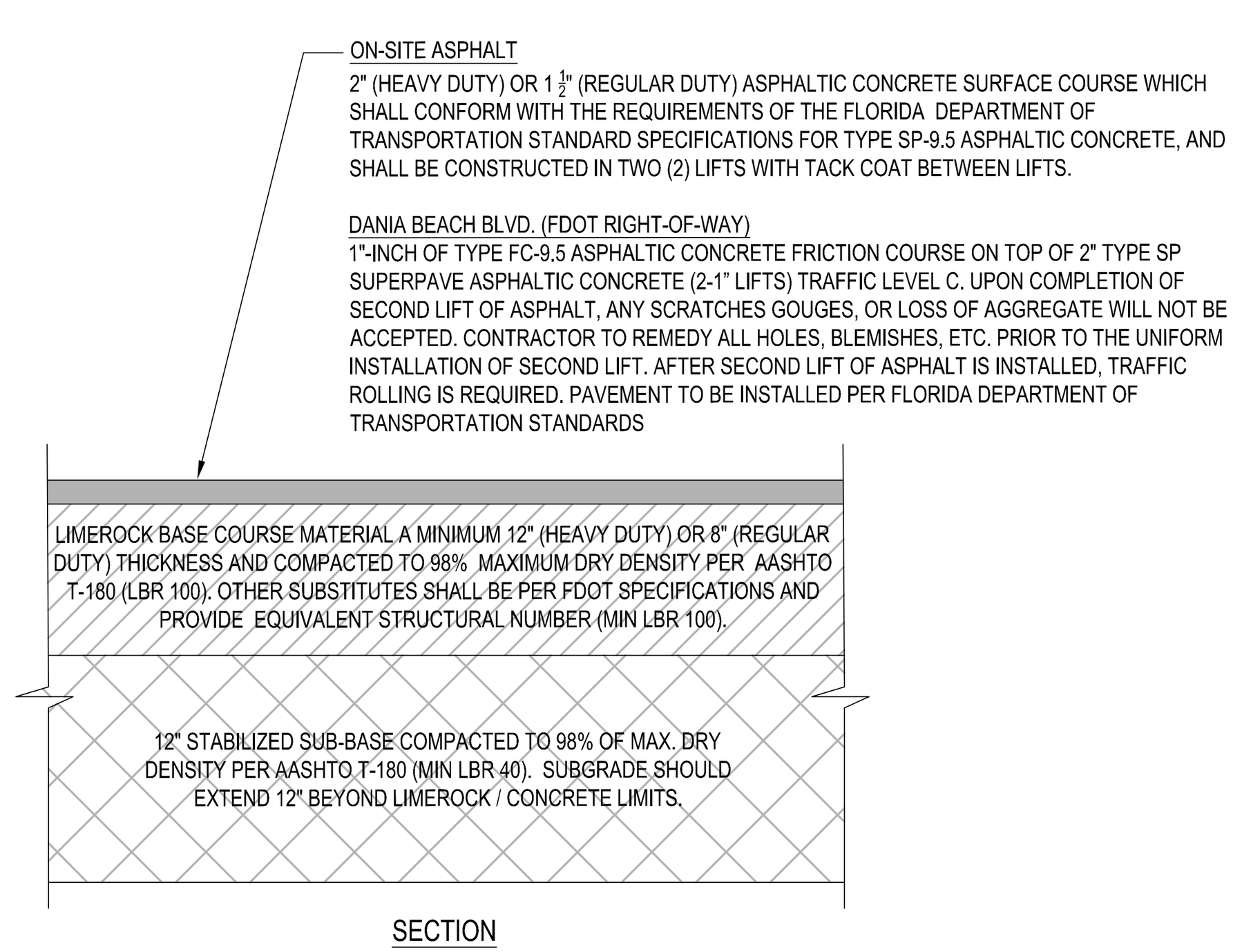

9 ASPHALTIC CONCRETE PAVEMENT DETAIL

SCALE: NONE

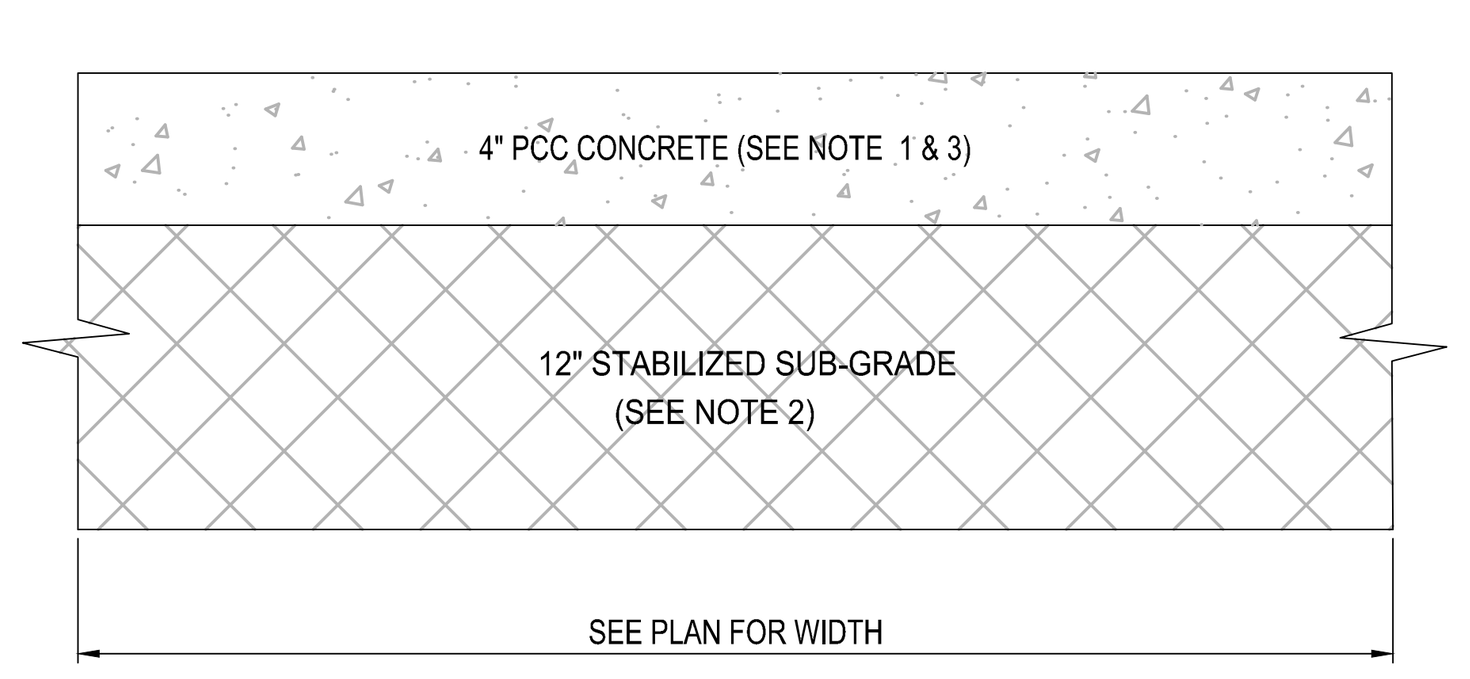

NOTES:

1. SIDEWALK SHALL BE 4" THICK EXCEPT IN DRIVEWAYS WHERE THE THICKNESS SHALL BE 6".
2. 12" SUBGRADE BELOW SIDEWALK SHALL BE COMPACTED TO 98% OF MAX. DENSITY PER A.A.S.H.T.O. T-180. SUBGRADE SHALL EXTEND 6" AT LEAST 6" BEYOND EDGE OF CONCRETE.
3. CONCRETE STRENGTH SHALL BE MIN. 3,500 PSI @ 28 DAYS.
4. SIDEWALK REMOVAL & REPLACEMENTS TO CONSIST OF FULL FLAGS.
5. PROVIDE EXPANSION JOINT (TYPE 'A') AT CONNECTIONS BETWEEN NEW AND EXISTING SIDEWALK.
6. PROVIDE FIBEROUS JOINTS 20' O.C.

10 TYPICAL CONCRETE SIDEWALK SECTION

NONE

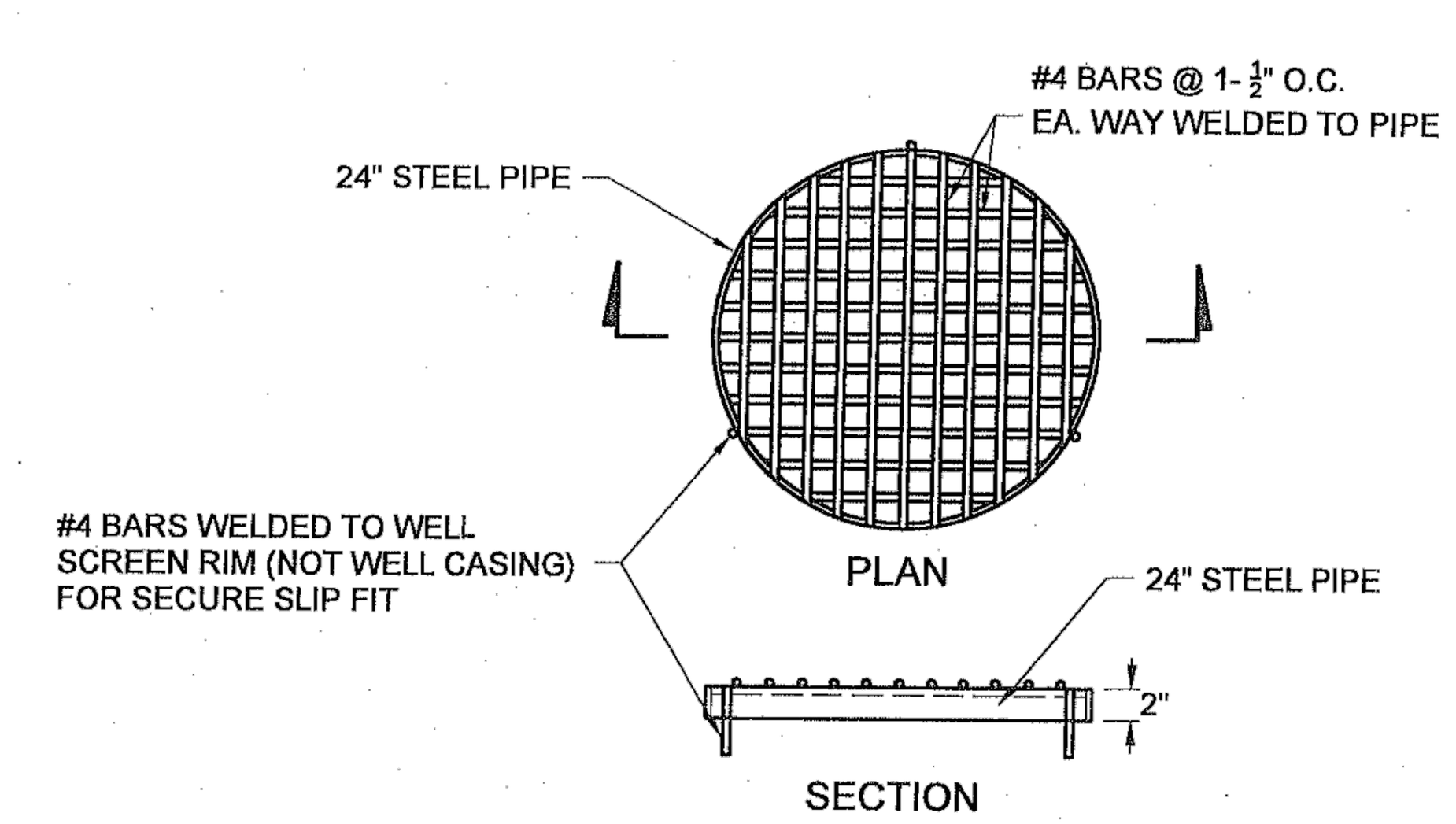

STEEL WELL GRATE DETAIL

Hot Dip Galvanized after Fabrication

11 STEEL WELL GRATE

SCALE: NONE

THOMAS ENGINEERING GROUP
CIVIL ENGINEERS - PROJECT MANAGERS - LAND PLANNING - LANDSCAPE ARCHITECTS
1502 W. FLETCHER AVE. UNIT NO. 101 TAMPA, FL 33612 P: (813) 379-4100
125 W. INDIANTOWN RD. SUITE 206 JUPITER, FL 33458 P: 561-203-7503

THE INFORMATION, DESIGN AND CONTENT OF THIS PLAN ARE PROPRIETARY AND SHALL NOT BE COPIED OR USED FOR ANY PURPOSE WITHOUT PRIOR WRITTEN AUTHORIZATION FROM THOMAS ENGINEERING GROUP, LLC. ONLY APPROVED, SIGNED AND SEALED PLANS SHALL BE UTILIZED FOR CONSTRUCTION PURPOSES. © 2015 THOMAS ENGINEERING GROUP, LLC.

REVISIONS:

REV:	DATE:	COMMENT:	BY:

Sunshine 811
Call 811 or visit sunshine811.com two full business days before digging to have buried facilities located and marked.
Check positive response codes before you dig!

PROJECT No.: F220134
DRAWN BY: CAD
CHECKED BY: MAT
DATE: 01/09/2023
CAD I.D.: F220134 PGD DTLS

PROJECT:

PRELIMINARY SOUTH TOWER PLANS

FOR

THE RELATED GROUP

CITY OF HOLLYWOOD FLORIDA

THOMAS ENGINEERING GROUP
6300 NW 31ST AVENUE
FORT LAUDERDALE, FL 33309
PH: (954) 202-7000
FX: (954) 202-7070
www.ThomasEngineeringGroup.com

MICHAEL A. TROXELL
PROFESSIONAL ENGINEER
FLORIDA LICENSE No. 50572
March 10, 2023
FLORIDA BUSINESS CERT. OF AUTH. No. 27528

SHEET TITLE:

PAVING, GRADING, & DRAINAGE DETAILS

SHEET NUMBER:

PD-02

Printed on Friday, March 10, 2023, 11:37 AM by Cesar DeLosSantos

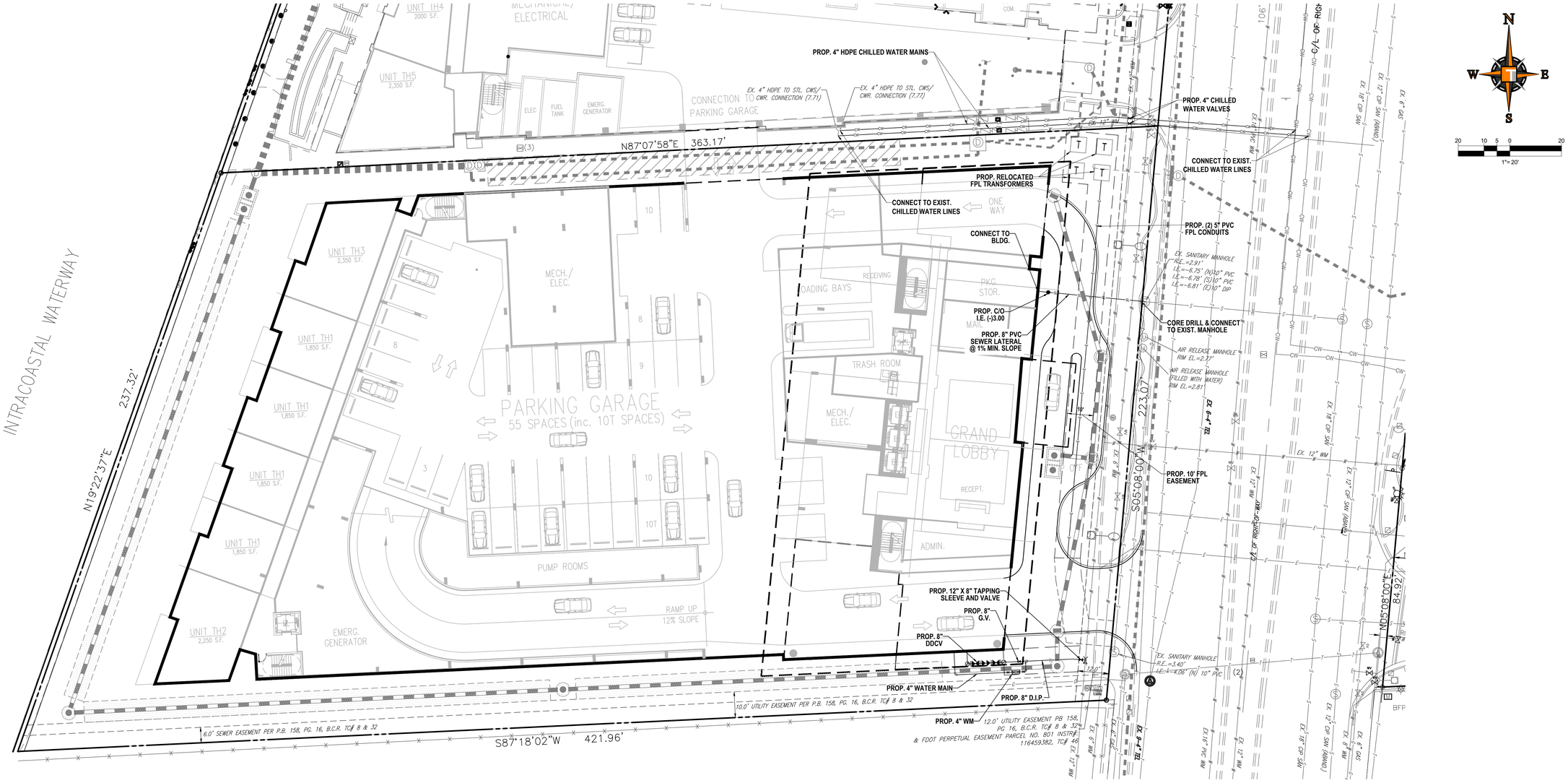
INTRACOASTAL WATERWAY
N19°22'37"E 237.32'
UNIT TH5 2,350 S.F.
UNIT TH4 2000 S.F.
MECHANICAL/ ELECTRICAL
ELEC
FUEL TANK
EMERG. GENERATOR
CONNECTION TO PARKING GARAGE
EX. 4" HDPE TO STL. CWS/ CWR. CONNECTION (7.71)
EX. 4" HDPE TO STL. CWS/ CWR. CONNECTION (7.77)
PROP. 4" HDPE CHILLED WATER MAINS
N87°07'58"E 363.17'
UNIT TH3 2,350 S.F.
UNIT TH1 1,850 S.F.
UNIT TH1 1,850 S.F.
UNIT TH1 1,850 S.F.
UNIT TH1 1,850 S.F.
UNIT TH2 2,250 S.F.
MECH./ ELEC.
PARKING GARAGE
55 SPACES (inc. 10T SPACES)
PUMP ROOMS
RAMP UP 12% SLOPE
EMERG. GENERATOR
LOADING BAYS
RECEIVING
PKG. STOR.
MAIL
TRASH ROOM
MECH./ ELEC.
GRAND LOBBY
RECEPT.
ADMIN.
ONE WAY
CONNECT TO EXIST. CHILLED WATER LINES
PROP. RELOCATED FPL TRANSFORMERS
CONNECT TO BLDG.
PROP. C/O I.E. (-)3.00
PROP. 8" PVC SEWER LATERAL @ 1% MIN. SLOPE
PROP. 4" CHILLED WATER VALVES
CONNECT TO EXIST. CHILLED WATER LINES
PROP. (2) 5" PVC FPL CONDUITS
EX. SANITARY MANHOLE RE.=2.91' I.E.=-6.75' (N)10" PVC I.E.=-6.78' (S)10" PVC I.E.=-6.81' (E)10" DIP
CORE DRILL & CONNECT TO EXIST. MANHOLE
AIR RELEASE MANHOLE RIM EL.=2.77'
AIR RELEASE MANHOLE (FILLED WITH WATER) RIM EL.=2.81
PROP. 10' FPL EASEMENT
S05°08'00"W 223.07'
EX. 12" WM
EX. 6" FM
EX. 8" FM
EX. 12" RECLAIMED WM
EX. 16" WM
EX. 20" WM
EX. 24" WM
EX. 30" WM
EX. 36" WM
EX. 42" WM
EX. 48" WM
EX. 54" WM
EX. 60" WM
EX. 66" WM
EX. 72" WM
EX. 12"

WATER SYSTEM NOTES (CONTINUED):

11. ALL WATER MAIN INSTALLATIONS SHALL COMPLY WITH THE COLOR CODING REQUIREMENTS OF CHAPTER 62-555.320 F.A.C.

12. ALL PVC PIPE SHALL CONFORM TO THE REQUIREMENTS OF ANSI/AWWA C900 LATEST REVISION AND CLASS DR 18. ALL DIP WATER MAINS SHALL BE DUCTILE IRON PRESSURE CLASS 350, WITH WALL THICKNESS COMPLYING WITH CLASS 52. ALL DUCTILE IRON PIPE SHALL CONFORM TO THE REQUIREMENTS OF ANSI/AWWA C151/A21.51-02 AND BE CEMENT LINED AND SEAL COATED PER ANSI/AWWA C104/A21.4-03.

13. FITTINGS SHALL BE DUCTILE IRON, MEETING ANSI/AWWA C153/A21.53-00 SPECIFICATIONS, WITH 350 PSI MINIMUM WORKING PRESSURE. FITTINGS MUST BE CEMENT LINED AND SEAL COATED PER ANSI/AWWA C104/A21.4-03. ALL DUCTILE IRON PIPE AND FITTINGS MUST BE MANUFACTURED IN THE UNITED STATES OF AMERICA.

14. ALL DUCTILE IRON PIPE TO BE MECHANICAL JOINTS, WRAPPED IN POLY. ADEQUATE PROTECTIVE MEASURES AGAINST CORROSION SHALL BE USED AS DETERMINED BY DESIGN.

15. PAVEMENT RESTORATION SHALL BE CARRIED OUT IN ACCORDANCE WITH THE REQUIREMENTS OF THE CITY.

16. ALL TRENCHING, PIPE LAYING, BACKFILL, PRESSURE TESTING, AND DISINFECTING MUST COMPLY WITH THE CITY OF HOLLYWOOD SPECIFICATIONS.

17. THE MINIMUM DEPTH OF COVER OVER WATER MAINS IS 30" (DIP) OR 36" (PVC).

18. MINIMUM HORIZONTAL SEPARATION BETWEEN STORM STRUCTURES AND WATER MAINS SHALL BE 3'.

19. MAXIMUM DEFLECTION PER EACH JOINT SHALL BE 50% OF MANUFACTURES RECOMMENDATION (MAXIMUM) WHERE DEFLECTION IS REQUIRED.

20. CONTRACTOR SHALL BE RESPONSIBLE FOR IDENTIFYING CONFLICTS WITH WATER MAINS PLACED AT MINIMUM COVER. IN CASE OF CONFLICT, WATER MAIN SHALL BE LOWERED TO PASS UNDER CONFLICTS WITH 18" MINIMUM VERTICAL SEPARATION. NO ADDITIONAL PAYMENT SHALL BE DUE TO CONTRACTOR FOR LOWERING THE MAIN OR THE ADDITIONAL FITTINGS USED THEREON.

21. PIPE JOINT RESTRAINT SHALL BE PROVIDED BY THE USE OF DUCTILE IRON FOLLOWER GLANDS MANUFACTURED TO ASTM A 536-80. TWIST-OFF NUTS SHALL BE USED TO ENSURE PROPER ACTUATING OF THE RESTRAINING DEVICES. THE MECHANICAL JOINT RESTRAINING DEVICES SHALL HAVE A WORKING PRESSURE OF 250 PSI MINIMUM, WITH A MINIMUM SAFETY FACTOR OF 2:1, AND SHALL BE EBAA IRON INC., MEGALUG OR APPROVED EQUAL. JOINT RESTRAINTS SHALL BE PROVIDED AT A MINIMUM OF THREE JOINTS (60 FEET) FROM ANY FITTING.

22. WHENEVER IT IS NECESSARY, IN THE INTEREST OF SAFETY, TO BRACE THE SIDES OF A TRENCH, THE CONTRACTOR SHALL FURNISH, PUT IN PLACE AND MAINTAIN SUCH SHEETING OR BRACING AS MAY BE NECESSARY TO SUPPORT THE SIDES OF THE EXCAVATION TO ENSURE PERSONNEL SAFETY, AND TO PREVENT MOVEMENT WHICH CAN IN ANY WAY DAMAGE THE WORK OR ENDANGER ADJACENT STRUCTURES. THE CONTRACTOR SHALL BE SOLELY RESPONSIBLE FOR THE SEQUENCE, METHODS AND MEANS OF CONSTRUCTION, AND FOR THE IMPLEMENTATION OF ALL OSHA AND OTHER SAFETY REQUIREMENTS.

ISSUED: 03/01/1994 | DRAWN: EAM | APPROVED: XXX
DEPARTMENT OF PUBLIC UTILITIES STANDARD DETAIL
WATER SYSTEM NOTES
REVISED: 06/08/2014 | DRAWING NO. W-02

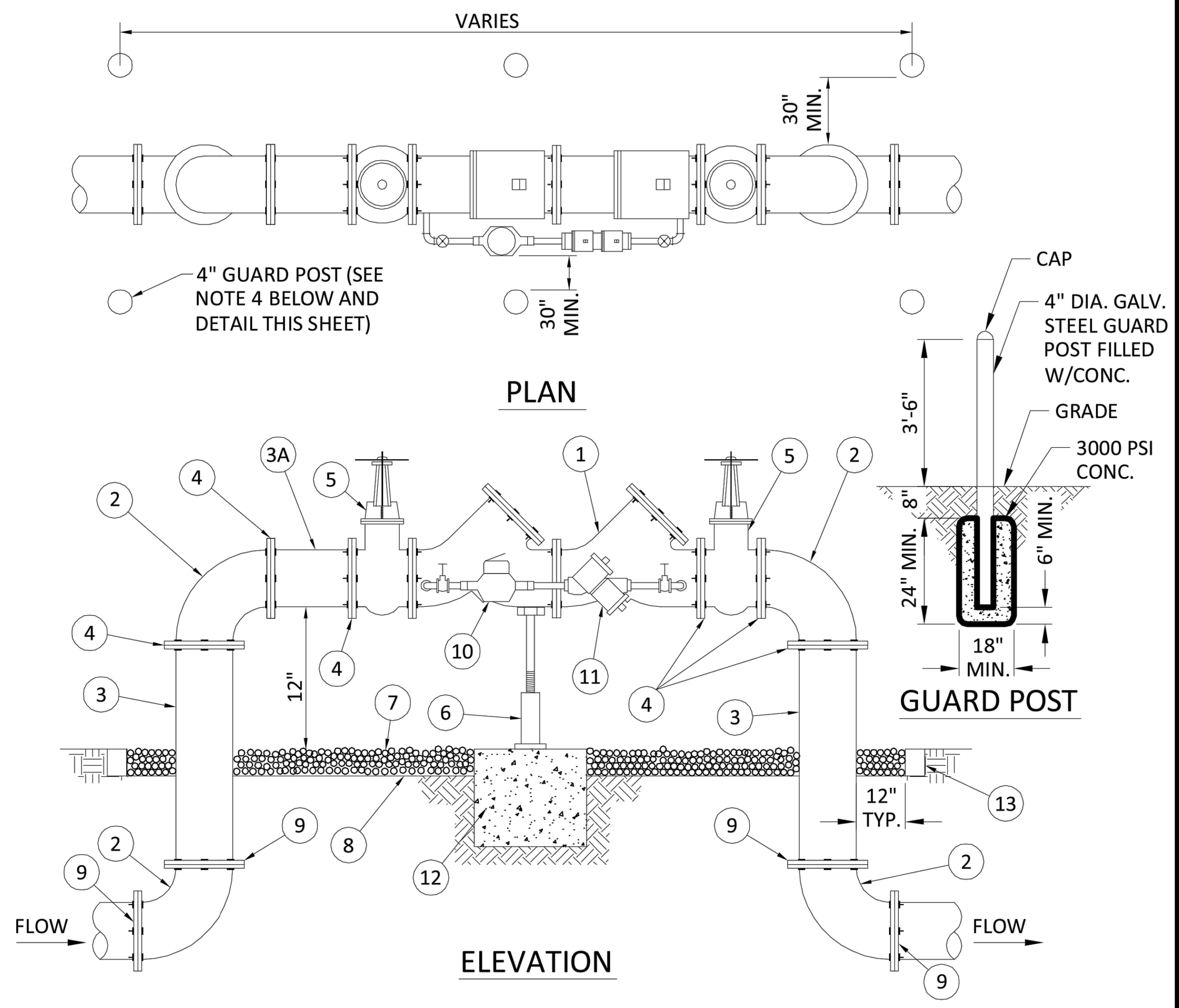

MATERIALS					
ITEM	QTY.	DESCRIPTION	ITEM	QTY.	DESCRIPTION
1	1	4",6",8" VALVE,DOUBLE CHECK	7	N/A	PEA GRAVEL (4" DEEP)
2	4	4",6",8" BEND-90°	8	N/A	PLASTIC LINER/WEED STOP (5 MILS)
3	2	4",6",8" D.I.P. SPOOL PIECE	9	4	RESTRAINED JOINTS
3A	1	4",6",8" D.I.P. SPOOL PIECE (24" LONG)	10	1	LOW FLOW METER
4	7	4",6",8" FLANGE, D.I.P.	11	1	VALVE, BYPASS DOUBLE CHECK
5	2	4",6",8" GATE VALVE (SEE NOTE 6)	12	1	16"X16"X16" CONC. SUPPORT
6	1	SCREW JACK/ANCHORED	13	1	P.T. 2X4 LUMBER ALL AROUND

NOTES:
1. FIELD ADJUST AND CUT ITEM 3 TO THE PROPER LENGTH.
2. ALL PIPING SHALL BE D.I.P. CL 50/52 AS APPLICABLE TO MINIMUM STANDARDS.
3. ALL LOW FLOW METER PIPING SHALL BE BRASS OR COPPER.
4. PROTECTIVE 4" GALV. GUARD POSTS SHALL BE SPACED EVENLY APART AS SHOWN ABOVE OR IN ACCORDANCE WITH INSPECTOR'S DIRECTIONS.
5. MAY USE 45° BENDS (SEE DETAIL W-07.2) WHEN WORKING AREA IS NOT LIMITED, AS DIRECTED BY CITY.
6. GATE VALVES SHALL BE CHAINED AND LOCKED TOGETHER TO PREVENT TAMPERING.

ISSUED: 03/01/1994 | DRAWN: EAM | APPROVED: XXX
DEPARTMENT OF PUBLIC UTILITIES STANDARD DETAIL
TYPICAL 4", 6" AND 8" DOUBLE CHECK DETECTOR ASSEMBLY FOR FIRE SPRINKLER SERVICE (90° BENDS)
REVISED: 06/08/2014 | DRAWING NO. W-03

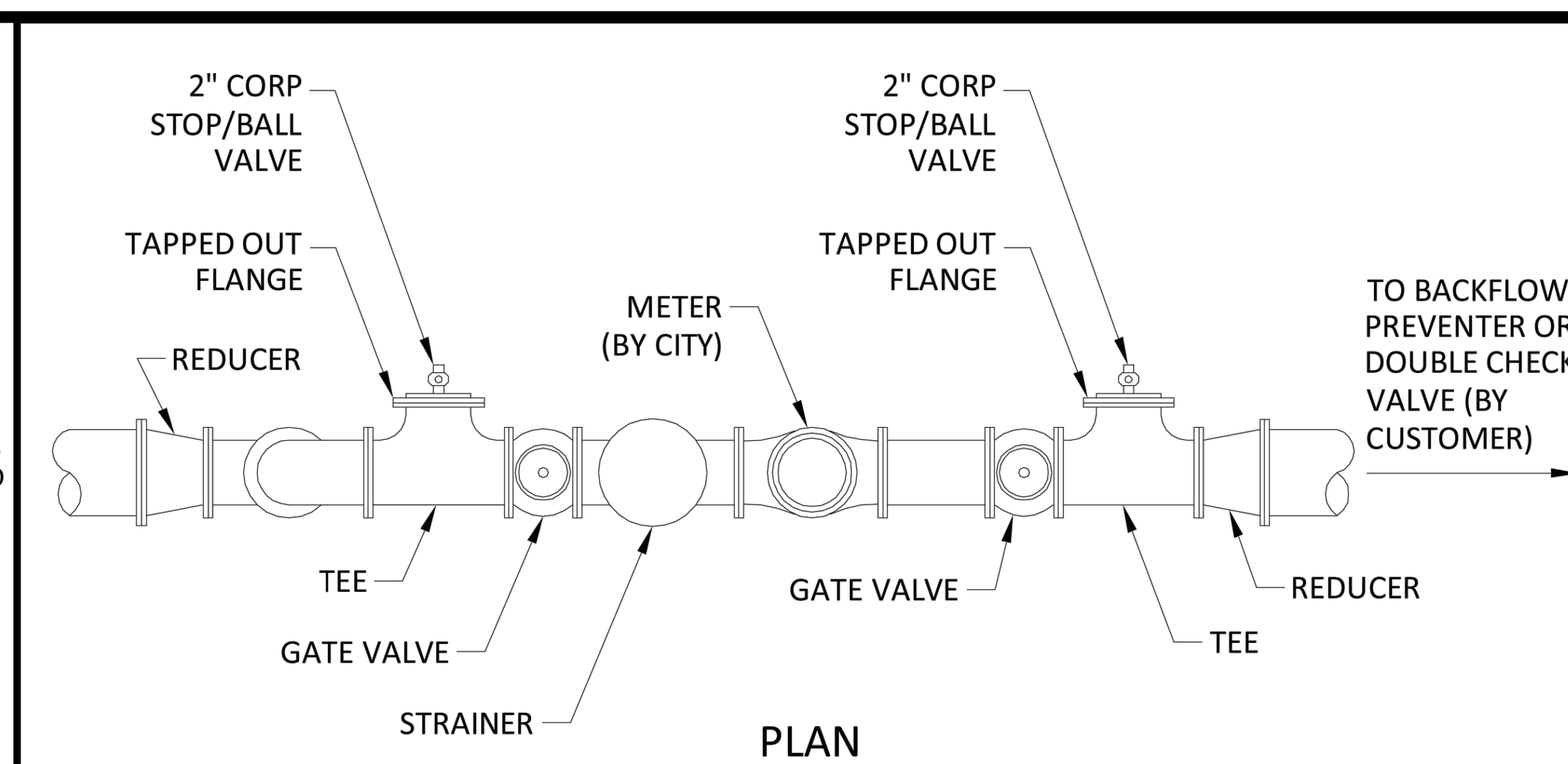

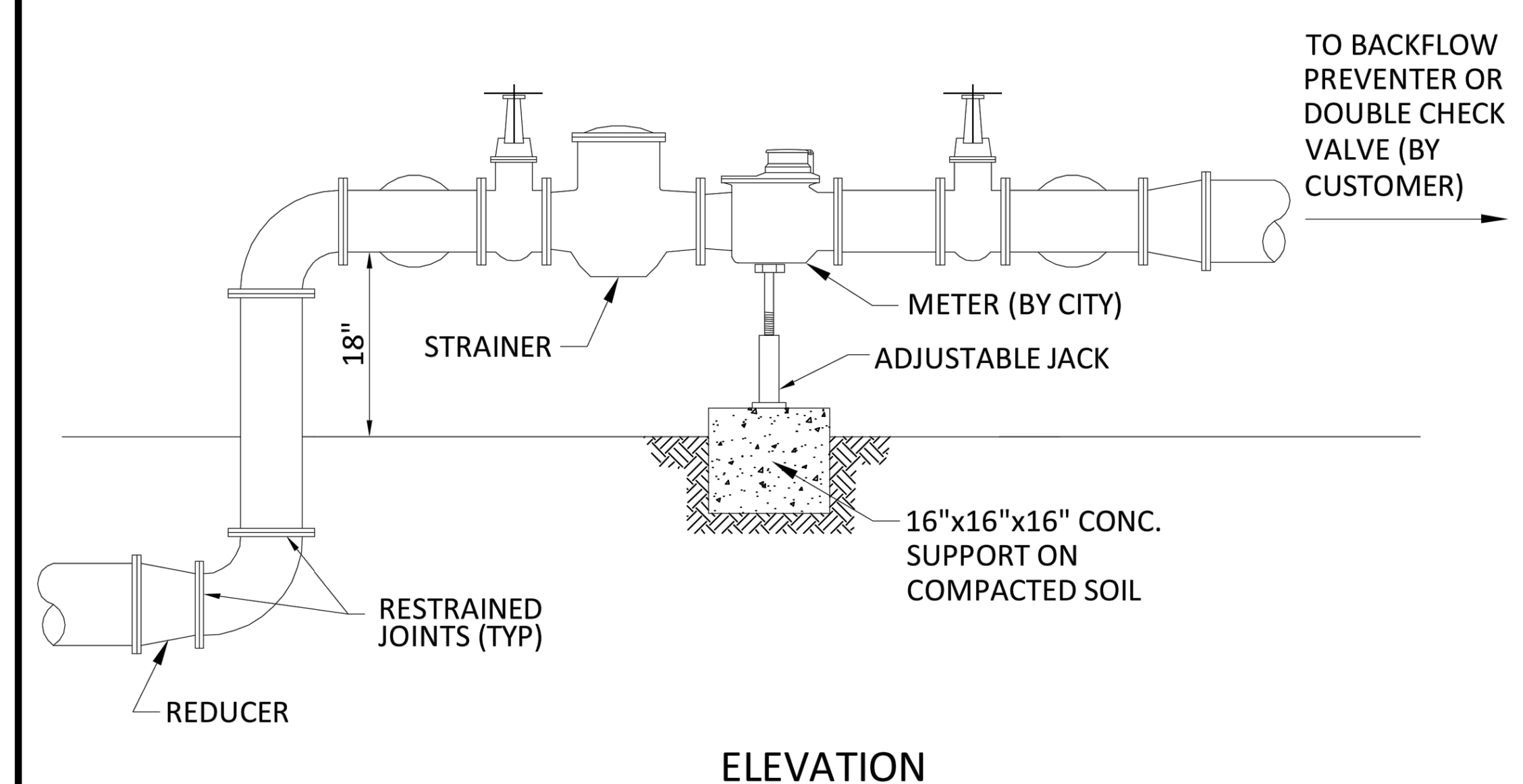

NOTES:
1. THE WATER METER AND STRAINER IS PROVIDED BY THE CITY OF HOLLYWOOD.
2. THE CITY'S RESPONSIBILITY ENDS AT THE REDUCER PRECEDING THE BACKFLOW PREVENTER.
3. TAPPED OUT FLANGE SHOULD MATCH SIZE OF TEE AND STANDARD 2" CORP STOP OR BALL VALVE.

ISSUED: 03/01/1994 | DRAWN: EAM | APPROVED: XXX
DEPARTMENT OF PUBLIC UTILITIES STANDARD DETAIL
TYPICAL METER 3" DIAMETER AND LARGER
REVISED: 06/08/2014 | DRAWING NO. W-11

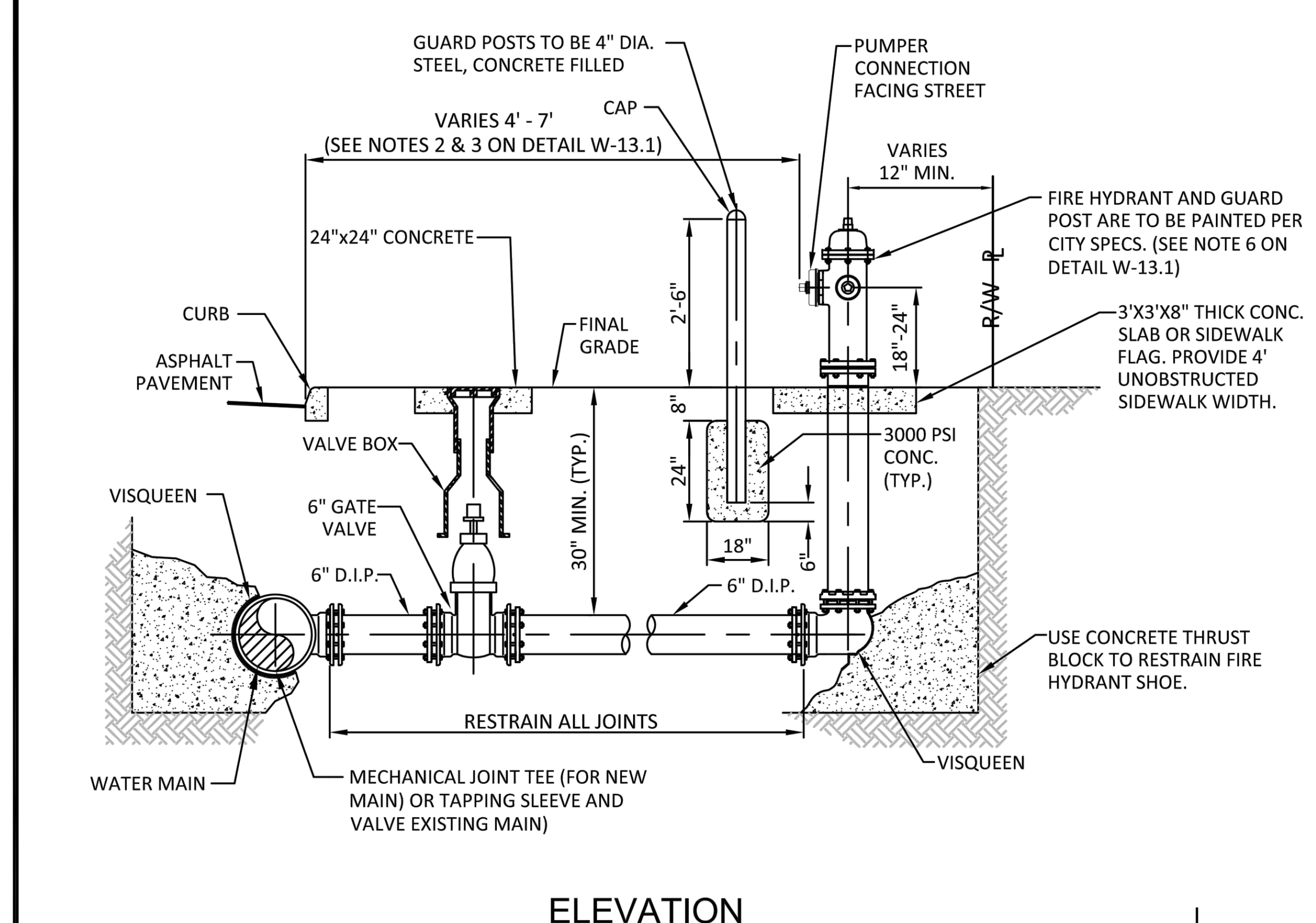

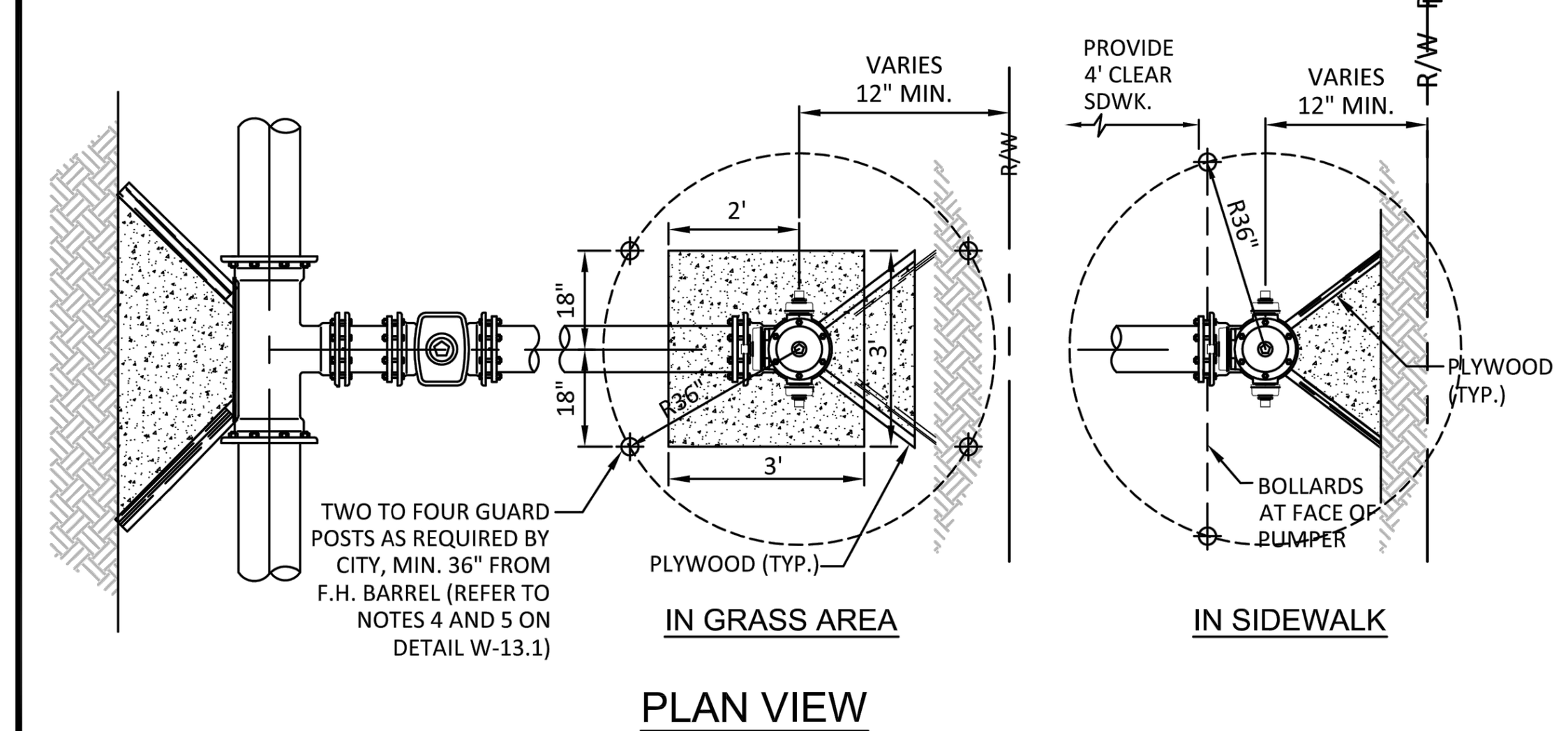

ISSUED: 03/01/1994 | DRAWN: EAM | APPROVED: XXX
DEPARTMENT OF PUBLIC UTILITIES STANDARD DETAIL
TYPICAL FIRE HYDRANT INSTALLATION
REVISED: 03/05/2019 | DRAWING NO. W-13

NOTES:

1. IN ALL CASES, PROVIDE 4' UNOBSTRUCTED SIDEWALK CLEAR OF THE FIRE HYDRANT AND BOLLARDS.
2. FIRE HYDRANTS SHALL BE LOCATED BETWEEN 4' AND 7' FROM THE FACE OF CURB.
3. FIRE HYDRANTS SHALL NOT BE LOCATED WITHIN A RADIUS OR WITHIN FDOT CLEAR DRIVING ZONE.
4. GUARD POSTS SHALL BE INSTALLED AS REQUIRED FOR SAFETY OR AS APPROVED BY THE DEPT. OF PUBLIC UTILITIES. IN SIDEWALK, LOCATE GUARD POSTS AT THE FACE OF THE PUMPER AND 2'-6' LEFT/RIGHT OF ℄ OF THE FIRE HYDRANT.EXTRA POSTS MAY BE REQUIRED IN INDUSTRIAL AND CONGESTED TRAFFIC AREAS. (4 POSTS MAX.)
5. FIRE HYDRANT CONCRETE SLAB AND CONCRETE GUARD POST FOOTINGS SHALL BE DIFFERENT POURS.
6. THE FIRE HYDRANT BONNET, OPERATING NUT, HOLD-DOWN NUT, PUMPER CAP AND HOSE CAPS SHALL BE PAINTED GREEN, AND THE HYDRANT UPPER BARREL SHALL BE PAINTED SILVER IN ACCORDANCE WITH CITY SPECIFICATIONS.

ISSUED: 03/01/1994 | DRAWN: EAM | APPROVED: XXX
DEPARTMENT OF PUBLIC UTILITIES STANDARD DETAIL
TYPICAL FIRE HYDRANT NOTES
REVISED: 06/08/2014 | DRAWING NO. W-13.1

WATER MAIN TESTING AND DISINFECTION NOTES:

1. NO CONNECTIONS TO THE EXISTING LINES SHALL BE MADE UNTIL THE PRESSURE AND BACTERIOLOGICAL TESTS HAVE BEEN PERFORMED ON THE PROPOSED WATER MAINS AND THE SYSTEM HAS BEEN APPROVED BY THE CITY OF HOLLYWOOD AND THE BROWARD COUNTY HEALTH DEPARTMENT.

2. THE PRESSURE TEST SHALL BE PERFORMED FOR 2 HOURS AT A CONSTANT PRESSURE OF 150 PSI AND IN ACCORDANCE WITH RULE 62-555.330 (FAC) C600 AWWA LATEST REVISION, EXCEPT AS OTHERWISE SPECIFIED HEREIN AND IN SPECIFICATION SECTION 15995, "PIPELINE TESTING AND DISINFECTION". PRESSURE TEST SHALL BE WITNESSED BY THE CITY OF HOLLYWOOD. THE ALLOWABLE LEAKAGE SHALL BE LESS THAN THE NUMBER OF GALLONS PER HOUR AS DETERMINED BY THE FORMULA:

$$L = \frac{S \times D \times \sqrt{P}}{148{,}000}$$

L = THE ALLOWABLE LEAKAGE IN GALLONS PER HOUR.
S = THE LENGTH OF PIPE BEING TESTED.
D = THE NOMINAL DIAMETER OF THE PIPE BEING TESTED.
P = THE AVERAGE TEST PRESSURE IN POUNDS PER SQUARE INCH.

3. THE COMPLETE LENGTH OF THE PROPOSED WATER MAIN SHALL BE TESTED, IN LENGTHS NOT TO EXCEED 2,000 FEET PER TEST.

4. PROPOSED WATER MAINS SHALL BE DISINFECTED IN ACCORDANCE WITH THE LATEST EDITION OF ANSI/AWWA STANDARD C651 AND BACTERIOLOGICAL TESTED FOR TWO CONSECUTIVE DAYS IN ACCORDANCE WITH SPECIFICATION SECTION 15995, "PIPELINE TESTING AND DISINFECTION".

5. BACTERIOLOGICAL TESTS SHALL BE REQUESTED AND PAID FOR BY THE CONTRACTOR.

6. THE CONTRACTOR SHALL DIRECTLY HIRE A TESTING LABORATORY CERTIFIED BY THE FLORIDA DEPARTMENT OF HEALTH IN ORDER TO COLLECT AND TEST WATER SAMPLES FROM THE WATER DISTRIBUTION SYSTEM TO BE PLACED INTO SERVICE. SAMPLE COLLECTION AND BACTERIOLOGICAL ANALYSES SHALL BE PERFORMED IN ACCORDANCE WITH RULES 62-555.315(6), 62-555.340 AND 62-555.330 (FAC), AS WELL AS ALL REQUIREMENTS OF THE BROWARD COUNTY HEALTH DEPARTMENT PERMIT.

7. THE WATER DISTRIBUTION SYSTEM SHALL NOT BE CONSIDERED COMPLETE AND READY FOR FINAL INSPECTION UNTIL SUCCESSFUL TEST RESULTS ARE OBTAINED FOR ALL TESTS DESCRIBED ABOVE.

ISSUED: 03/01/1994 | DRAWN: EAM | APPROVED: XXX
DEPARTMENT OF PUBLIC UTILITIES STANDARD DETAIL
WATER MAIN TESTING AND DISINFECTION NOTES
REVISED: 06/08/2014 | DRAWING NO. W-14

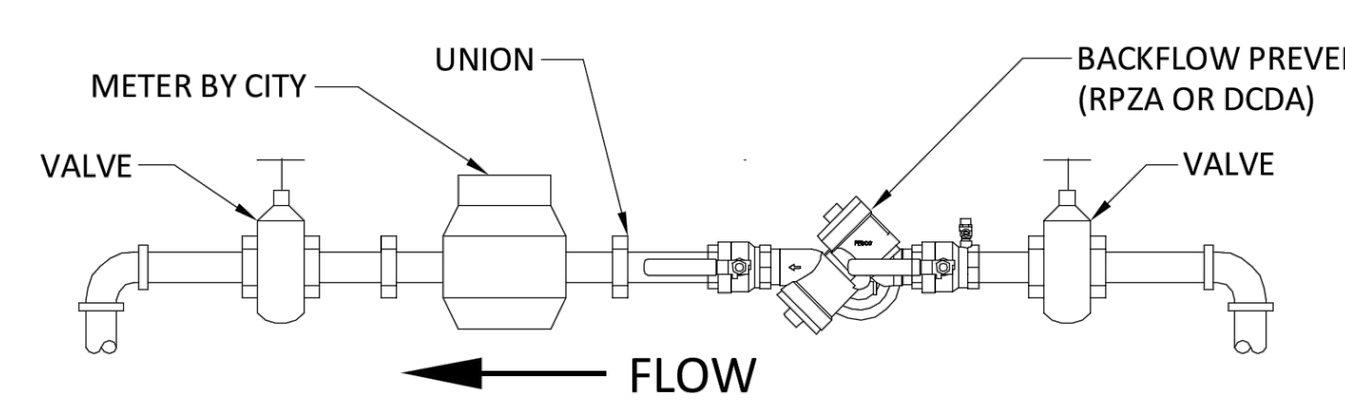

FILLING ASSEMBLY FITTINGS AND EQUIPMENT SHALL BE 2" MAX.
DETAIL 'A'

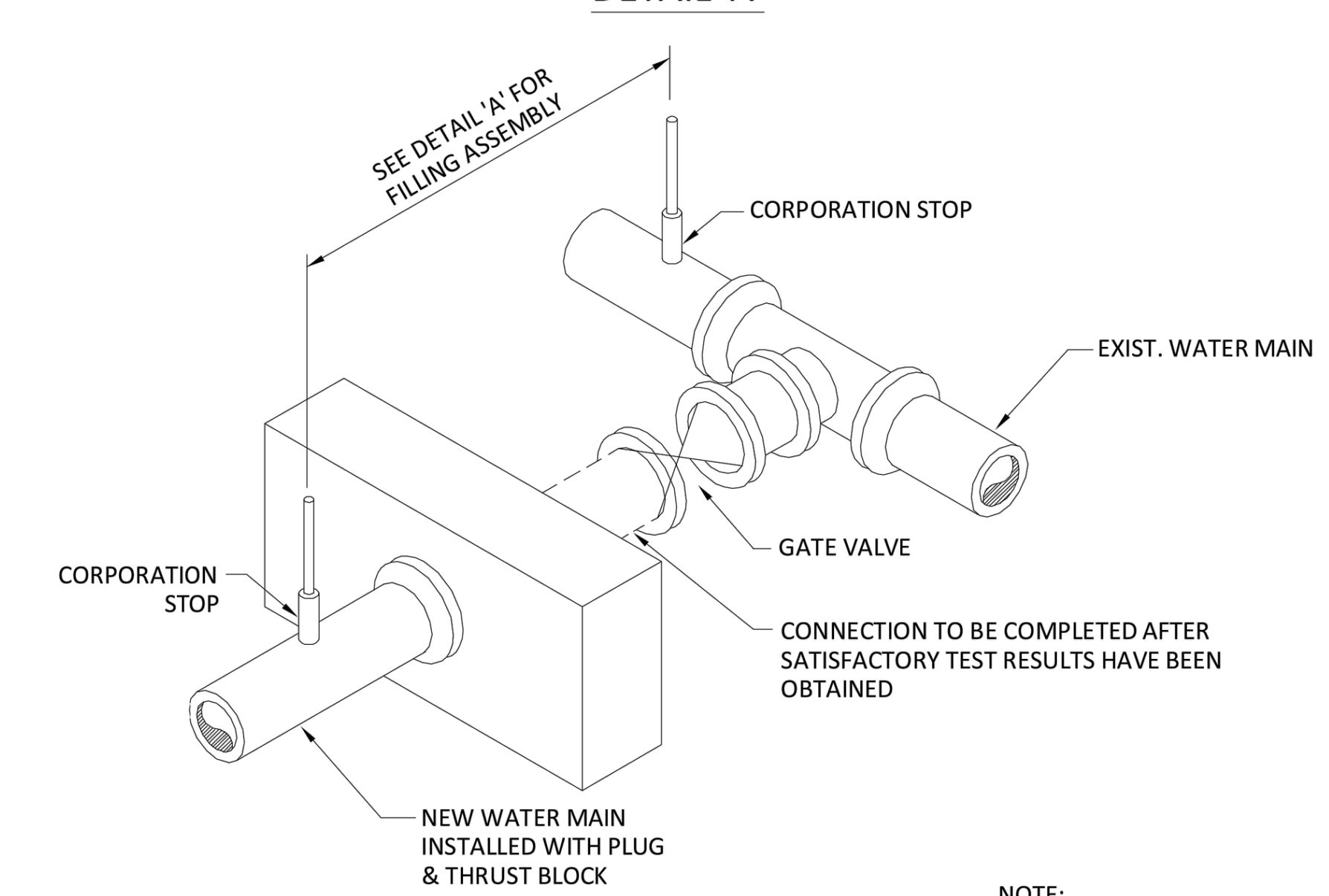

METHOD ``A"

NOTE:
REMOVE TEMPORARY CONNECTION AT CORPORATION STOP ON NEW MAIN AFTER FILLING & FLUSHING HAS BEEN COMPLETED.

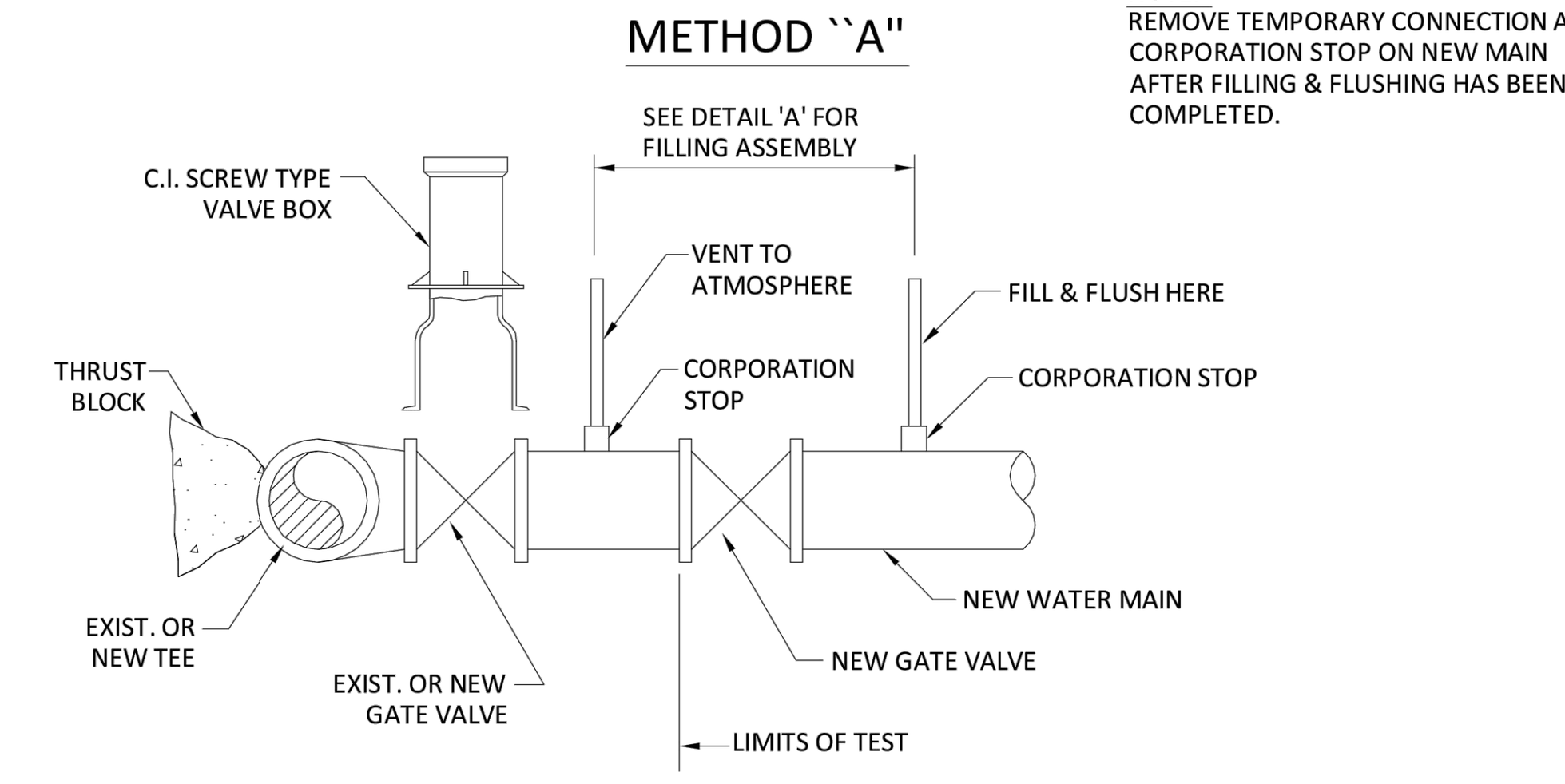

METHOD ``B"

ISSUED: 03/01/1994 | DRAWN: EAM | APPROVED: XXX
DEPARTMENT OF PUBLIC UTILITIES STANDARD DETAIL
FILLING AND FLUSHING DETAILS
REVISED: 06/08/2014 | DRAWING NO. W-15

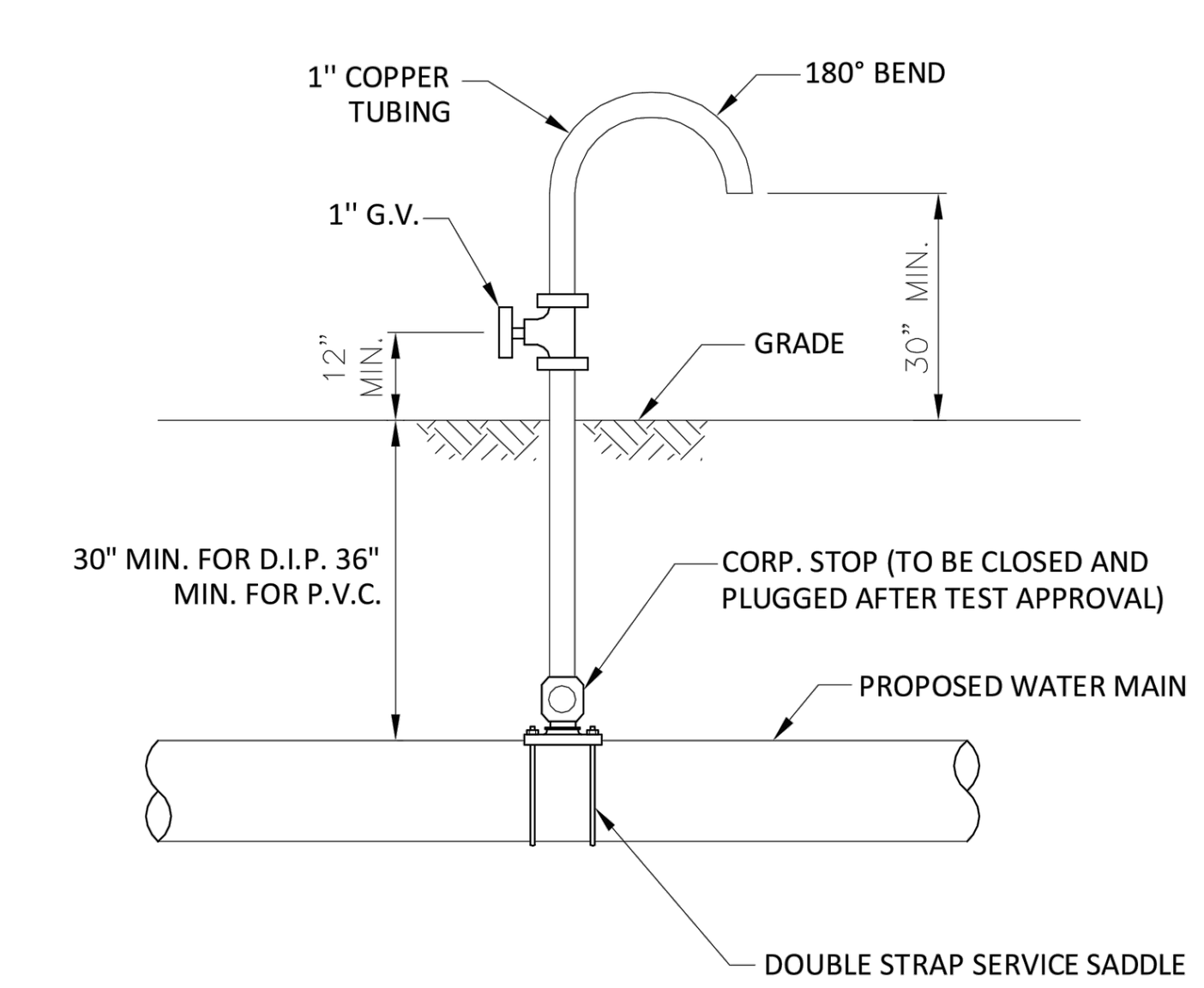

NOTES:
SAMPLING POINT SHALL NOT BE REMOVED UNTIL APPROVAL IS OBTAINED FROM BROWARD COUNTY HEALTH DEPARTMENT.

ISSUED: 03/01/1994 | DRAWN: EAM | APPROVED: XXX
DEPARTMENT OF PUBLIC UTILITIES STANDARD DETAIL
SAMPLING POINT DETAIL
REVISED: 06/08/2014 | DRAWING NO. W-16

THOMAS ENGINEERING GROUP
CIVIL ENGINEERS - PROJECT MANAGERS - LAND PLANNING - LANDSCAPE ARCHITECTS
1502 W. FLETCHER AVE. UNIT NO. 101 TAMPA, FL 33612 P: (813) 379-4100
125 W. INDIANTOWN RD. SUITE 206 JUPITER, FL 33458 P: 561-203-7503

THE INFORMATION, DESIGN AND CONTENT OF THIS PLAN ARE PROPRIETARY AND SHALL NOT BE COPIED OR USED FOR ANY PURPOSE WITHOUT PRIOR WRITTEN AUTHORIZATION FROM THOMAS ENGINEERING GROUP, LLC. ONLY APPROVED, SIGNED AND SEALED PLANS SHALL BE UTILIZED FOR CONSTRUCTION PURPOSES. © 2015 THOMAS ENGINEERING GROUP, LLC.

REVISIONS:			
REV:	DATE:	COMMENT:	BY:

Sunshine 811
Call 811 or visit sunshine811.com two full business days before digging to have buried facilities located and marked.
Check positive response codes before you dig!

PROJECT No.:	F220134
DRAWN BY:	CAD
CHECKED BY:	MAT
DATE:	01/09/2023
CAD I.D.:	F220134 WSU-DTLS

PROJECT:
PRELIMINARY SOUTH TOWER PLANS
FOR
THE RELATED GROUP
CITY OF HOLLYWOOD FLORIDA

THOMAS ENGINEERING GROUP
6300 NW 31ST AVENUE
FORT LAUDERDALE, FL 33309
PH: (954) 202-7000
FX: (954) 202-7070
www.ThomasEngineeringGroup.com

MICHAEL A. TROXELL
PROFESSIONAL ENGINEER
FLORIDA LICENSE No. 50572
March 10, 2023
FLORIDA BUSINESS CERT. OF AUTH. No. 27528

SHEET TITLE:
UTILITY DETAILS
SHEET NUMBER:
U-02

Printed on Friday, March 10, 2023, 11:38 AM by Cesar DeLosSantos
G:\THE RELATED GROUP\F220134 - DIPLOMAT - 3450 S OCEAN DRIVE, HOLLYWOOD\DWG\SOUTH TOWER SET-2023-03-10\F220134 WSU-DTLS---->LAYOUT: WSU DTL1

WATER MAIN SEPARATION IN ACCORDANCE WITH F.A.C. RULE 62-555.314

OTHER PIPE	HORIZONTAL SEPARATION	CROSSING (1), (4)	JOINT SPACING @ CROSSING (FULL JOINT CENTERED) (8)
STORM SEWER, STORM WATER FORCE MAIN, RECLAIMED WATER (2)	WATER MAIN 3 ft minimum	WATER MAIN 12 inches is the minimum except for storm sewer, then 6 inches is the minimum and 12 inched is preferred	Alternate 3 ft minimum WATER MAIN
GRAVITY SANITARY SEWER, (3) SANITARY SEWER FORCE MAIN, RECLAIMED WATER	WATER MAIN 10 ft prefered 6 ft minimum	WATER MAIN 12 inches is the minimum except for gravity sewer, then 6 inches is the minimum and 12 inched is preferred	Alternate 6 ft minimum WATER MAIN
ON-SITE SEWAGE TREATMENT & DISPOSAL SYSTEM	10 ft minimum	———	———

1. WATER MAIN SHOULD CROSS ABOVE OTHER PIPE, WHEN WATER MAIN MUST BE BELOW OTHER PIPE, THE MINIMUM SEPARATION IS 12 INCHES.
2. RECLAIMED WATER REGULATED UNDER PART III OF CHAPTER 62-610, F.A.C.
3. 3 FT. FOR GRAVITY SANITARY SEWER WHERE THE BOTTOM OF THE WATER MAIN IS LAID AT LEAST 6 INCHES ABOVE THE TOP OF THE GRAVITY SANITARY SEWER.
4. 18" VERTICAL MINIMUM SEPARATION REQUIRED BY CITY OF HOLLYWOOD, UNLESS OTHERWISE APPROVED.
5. A MINIMUM 6 FOOT HORIZONTAL SEPARATION SHALL BE MAINTAINED BETWEEN ANY TYPE OF SEWER AND WATER MAIN IN PARALLEL INSTALLATIONS WHENEVER POSSIBLE.
6. IN CASES WHERE IT IS NOT POSSIBLE TO MAINTAIN A 10 FOOT HORIZONTAL SEPARATION, THE WATER MAIN MUST BE LAID IN A SEPARATE TRENCH OR ON AN UNDISTURBED EARTH SHELF LOCATED ON ONE SIDE OF THE SEWER OR FORCE MAIN AT SUCH AN ELEVATION THAT THE BOTTOM OF THE WATER MAIN IS AT LEAST 18 INCHES ABOVE THE TOP OF THE SEWER.
7. WHERE IT IS NOT POSSIBLE TO MAINTAIN A VERTICAL DISTANCE OF 18 INCHES IN A PARALLEL INSTALLATIONS, THE WATER MAIN SHALL BE CONSTRUCTED OF DIP AND THE SANITARY SEWER OR FORCE MAIN SHALL BE CONSTRUCTED OF DIP WITH A MINIMUM VERTICAL DISTANCE OF 6 INCHES. THE WATER MAIN SHOULD ALWAYS BE ABOVE THE SEWER. JOINTS ON THE WATER MAIN SHALL BE LOCATED AS FAR APART AS POSSIBLE FROM JOINTS ON THE SEWER OR FORCE MAIN (STAGGERED JOINTS).
8. ALL JOINTS ON THE WATER MAIN WITHIN 20 FEET OF THE CROSSING MUST BE MECHANICALY RESTRAINED.

ISSUED: 03/01/1994	DEPARTMENT OF PUBLIC UTILITIES STANDARD DETAIL	REVISED: 11/06/2017
DRAWN: EAM	SEPARATION REQUIREMENTS OF F.D.E.P.	DRAWING NO. G-01.1
APPROVED: XXX		

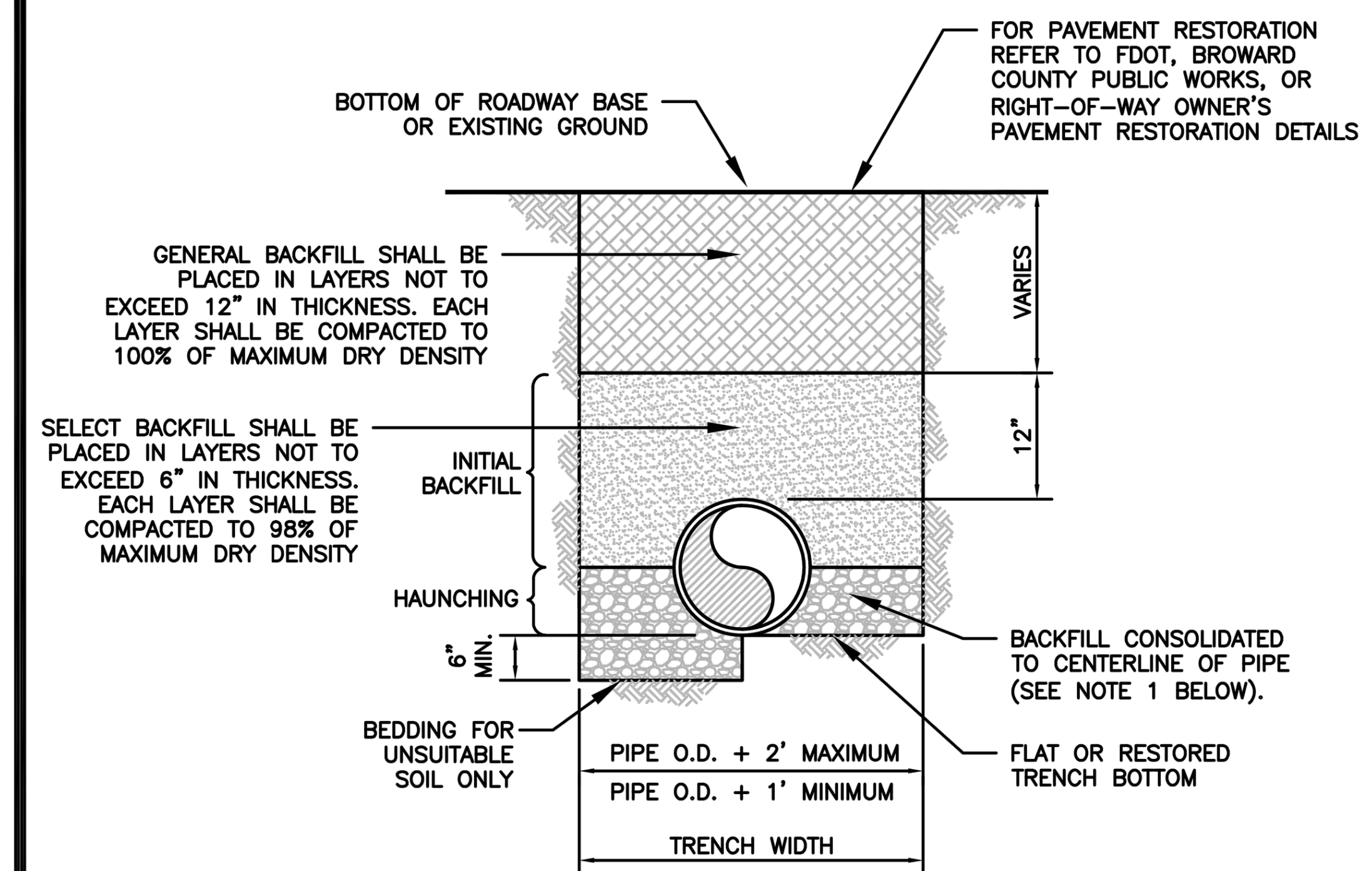

NOTES:

1. WHEN PIPE INSTALLATION IS ABOVE THE GROUND WATER TABLE ELEVATION, OR WHENEVER BEDDING COPPER PIPE UNDER ANY CONDITION, BEDDING MATERIAL SHALL BE CLEAN SANDY SOIL IF AVAILABLE WITHIN THE LIMITS OF CONSTRUCTION. IMPORTED BEDDING SHALL BE WELL GRADED, WASHED CRUSHED STONE (OR DRAINFIELD LIMEROCK). CRUSHED STONE SHALL CONSIST OF HARD, DURABLE, SUB-ANGULAR PARTICLES OF PROPER SIZE AND GRADATION, AND SHALL BE FREE FROM ORGANIC MATERIAL, WOOD, TRASH, SAND, LOAM, CLAY, EXCESS FINES, AND OTHER DELETERIOUS MATERIALS.
2. ALL BEDDING MATERIAL SHALL BE COMPACTED TO 95% OF MAXIMUM DENSITY BEFORE ANY PIPE IS LAID. FOR ADDITIONAL MATERIAL SPECIFICATIONS REFER TO SPECIFICATION SECTION 02222, "EXCAVATION AND BACKFILL FOR UTILITIES".
3. DENSITY TESTING SHALL BE IN ACCORDANCE WITH AASHTO T-180 AND ASTM D-3017.
4. BACKFILL TO COMPLY WITH FDOT DESIGN STANDARDS 125-8.

ISSUED: 03/01/1994	DEPARTMENT OF PUBLIC UTILITIES STANDARD DETAIL	REVISED: 06/08/2014
DRAWN: EAM	PIPE LAYING CONDITION TYPICAL SECTION (D.I.P.)	DRAWING NO. G-02
APPROVED: XXX		

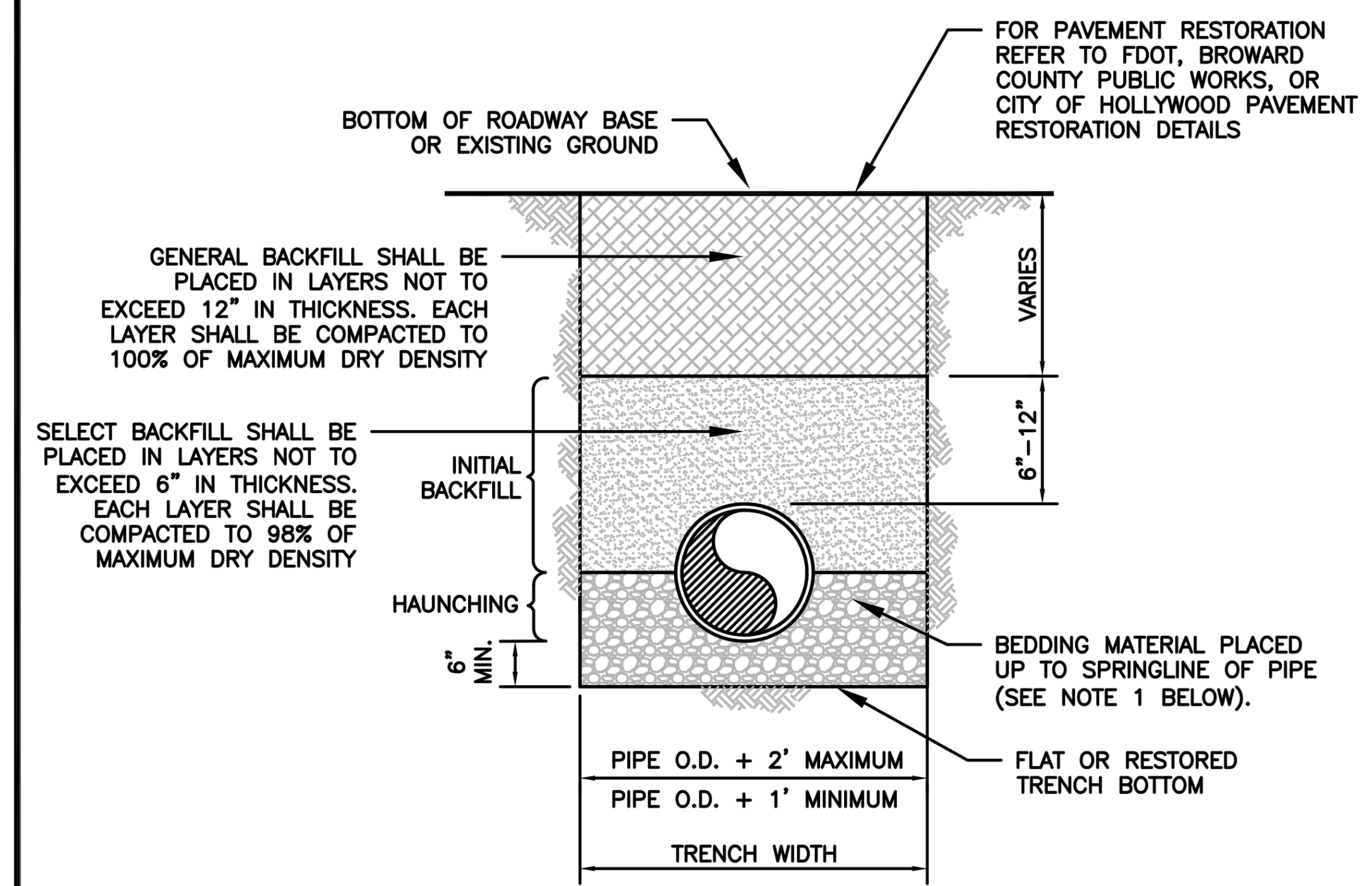

NOTES:

1. WHEN PIPE INSTALLATION IS ABOVE THE GROUND WATER TABLE ELEVATION, OR WHENEVER BEDDING COPPER PIPE UNDER ANY CONDITION, BEDDING MATERIAL SHALL BE CLEAN SANDY SOIL IF AVAILABLE WITHIN THE LIMITS OF CONSTRUCTION. IMPORTED BEDDING SHALL BE WELL GRADED, WASHED CRUSHED STONE (OR DRAINFIELD LIMEROCK). CRUSHED STONE SHALL CONSIST OF HARD, DURABLE, SUB-ANGULAR PARTICLES OF PROPER SIZE AND GRADATION, AND SHALL BE FREE FROM ORGANIC MATERIAL, WOOD, TRASH, SAND, LOAM, CLAY, EXCESS FINES, AND OTHER DELETERIOUS MATERIALS.
2. ALL BEDDING MATERIAL SHALL BE COMPACTED TO 95% OF MAXIMUM DENSITY BEFORE ANY PIPE IS LAID. FOR ADDITIONAL MATERIAL SPECIFICATIONS REFER TO SPECIFICATION SECTION 02222, "EXCAVATION AND BACKFILL FOR UTILITIES".
3. DENSITY TESTING SHALL BE IN ACCORDANCE WITH AASHTO T-180 AND ASTM D-3017.
4. BACKFILL TO COMPLY WITH FDOT DESIGN STANDARD 125-8.

ISSUED: 03/01/1994	DEPARTMENT OF PUBLIC UTILITIES STANDARD DETAIL	REVISED: 06/08/2014
DRAWN: EAM	PIPE LAYING CONDITION TYPICAL SECTION (P.V.C.)	DRAWING NO. G-03
APPROVED: XXX		

FLEXIBLE PAVEMENT RESTORATION NOTES:

1. THE ABOVE DETAILS APPLY ONLY TO ASPHALT PAVEMENT RESTORATION OVER UTILITY TRENCHES CUT WITHIN CITY OF HOLLYWOOD RIGHTS-OF-WAY. FOR PAVEMENT RESTORATION WITHIN BROWARD COUNTY OR FDOT RIGHTS-OF-WAY REFER TO THE CORRESPONDING DETAILS FOR THOSE AGENCIES.
2. LIMEROCK BASE MATERIAL SHALL HAVE A MINIMUM L.B.R. OF 100 AND A MINIMUM CARBONATE CONTENT OF 70%. REPLACED BASE MATERIAL OVER TRENCH SHALL BE A MINIMUM OF 12" THICK".
3. LIMEROCK BASE MATERIAL SHALL BE PLACED IN 12" MAXIMUM (LOOSE MEASUREMENT) THICKNESS LAYERS WITH EACH LAYER THOROUGHLY ROLLED OR TAMPED AND COMPACTED TO 100% OF MAXIMUM DENSITY, PER AASHTO T-180, PRIOR TO THE PLACEMENT OF THE SUCCEEDING LAYERS.
4. STABILIZED SUBGRADE MATERIAL SHALL BE GRANULAR AND SHALL HAVE A MINIMUM L.B.R. OF 40.
5. BACKFILL SHALL BE PLACED AND COMPACTED IN ACCORDANCE WITH THE PIPE LAYING CONDITION TYPICAL SECTIONS IN DETAILS G-02 AND G-03, AND THE SPECIFICATIONS, BUT TESTING WILL BEGIN 12" ABOVE THE INSTALLED FACILITY.
6. ALL EDGES AND JOINTS OF EXISTING ASPHALT PAVEMENT SHALL BE SAW CUT TO STRAIGHT LINES, PARALLEL TO OR PERPENDICULAR TO THE ROADWAY, PRIOR TO THE RESURFACING.
7. RESURFACING MATERIAL SHALL BE FDOT SUPERPAVE, AND SHALL BE APPLIED A MINIMUM OF TWO INCH IN THICKNESS.
8. MILL AND BUTT JOINT TO EXISTING PAVEMENT.
9. IF THE TRENCH IS FILLED TEMPORARILY, IT SHALL BE COVERED WITH A 2" ASPHALTIC CONCRETE PATCH TO KEEP THE FILL MATERIAL FROM RAVELING UNTIL REPLACED WITH A PERMANENT PATCH.
10. REFER TO SPECIFICATIONS FOR DETAILED PROCEDURES.
11. WHERE THE UTILITY TRENCH CROSSES EXISTING ASPHALT DRIVEWAYS, THE LIMEROCK BASE THICKNESS MAY BE A MINIMUM OF 6 INCHES THICK. REGARDLESS OF THE EXTENT OF IMPACT, THE ENTIRE DRIVEWAY SURFACE BETWEEN THE EDGE OF THE ROADWAY PAVEMENT AND PROPERTY LINE OR FRONT OF SIDEWALK SHALL BE OVERLAID USING 2-INCH THICK MINIMUM ASPHALTIC CONCRETE SURFACE COURSE WHERE INDICATED ON THE PLANS OR AS DIRECTED BY THE CITY/ENGINEER.

ISSUED: 03/01/1994	DEPARTMENT OF PUBLIC UTILITIES STANDARD DETAIL	REVISED: 11/06/2017
DRAWN: EAM	FLEXIBLE PAVEMENT RESTORATION NOTES	DRAWING NO. G-12
APPROVED: XXX		

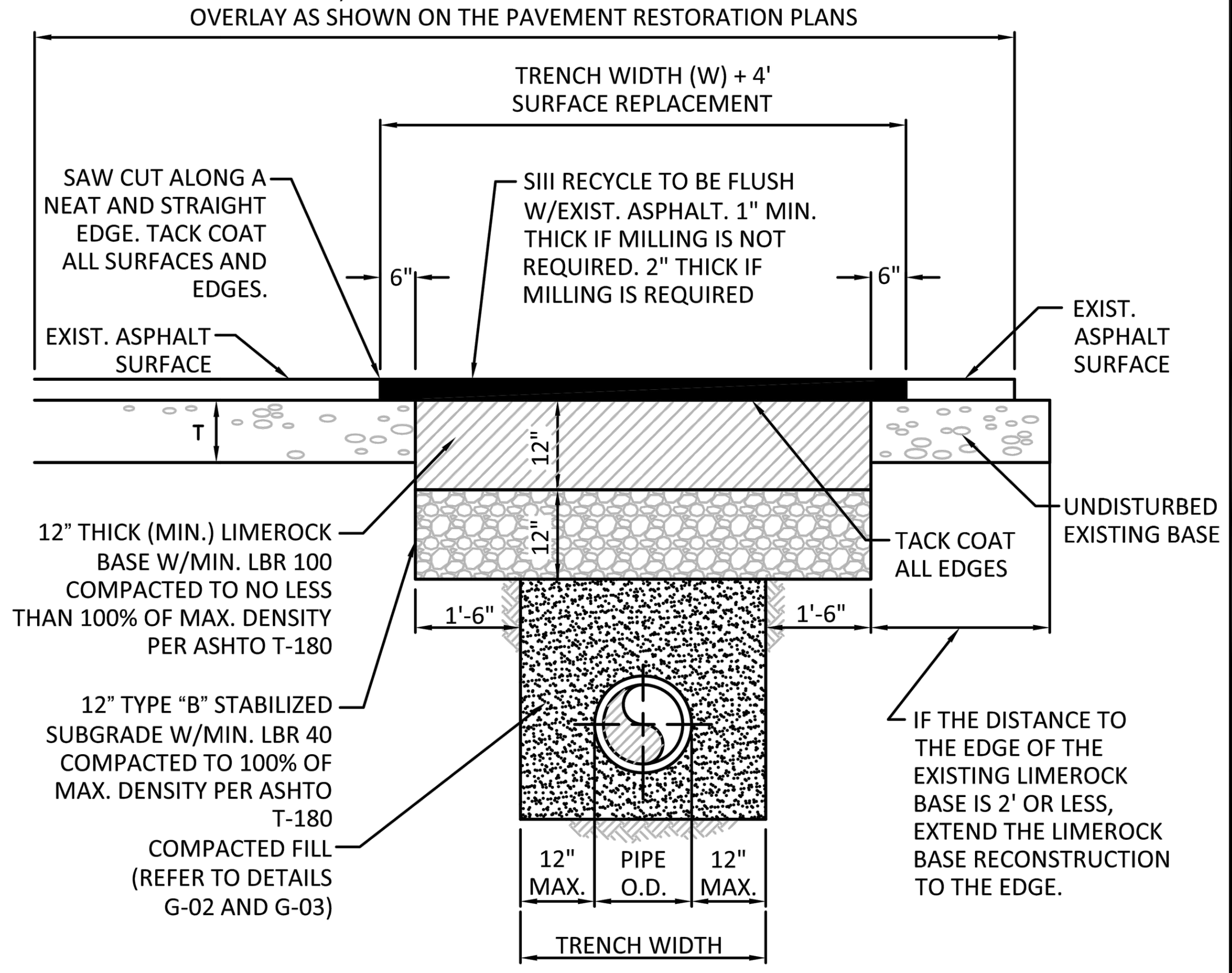

ISSUED: 03/01/1994	DEPARTMENT OF PUBLIC UTILITIES STANDARD DETAIL	REVISED: 11/06/2017
DRAWN: EAM	FLEXIBLE PAVEMENT RESTORATION FOR TRENCHES CUT PERPENDICULAR AND PARALLEL TO THE ROADWAY	DRAWING NO. G-12.1
APPROVED: XXX		

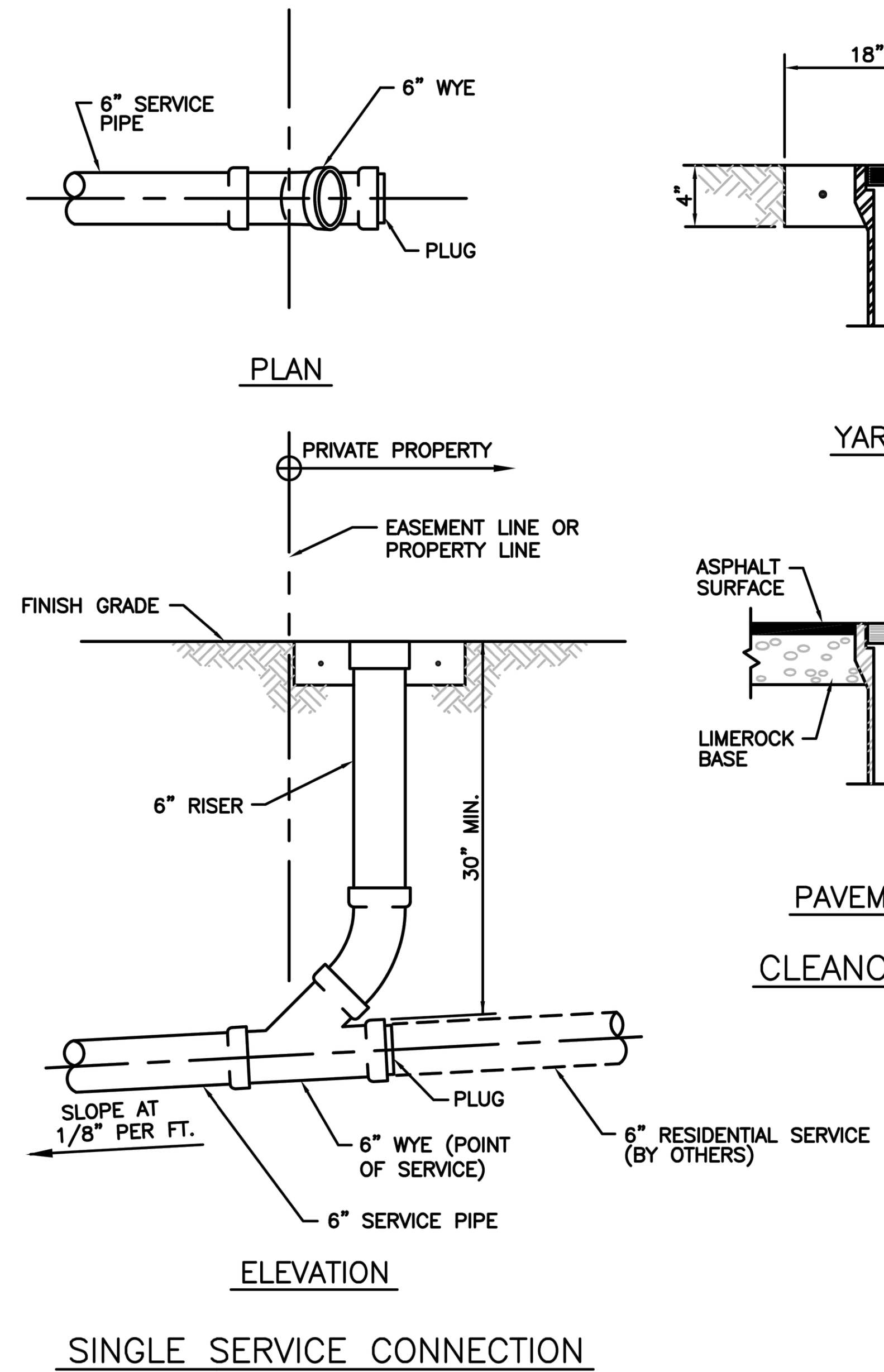

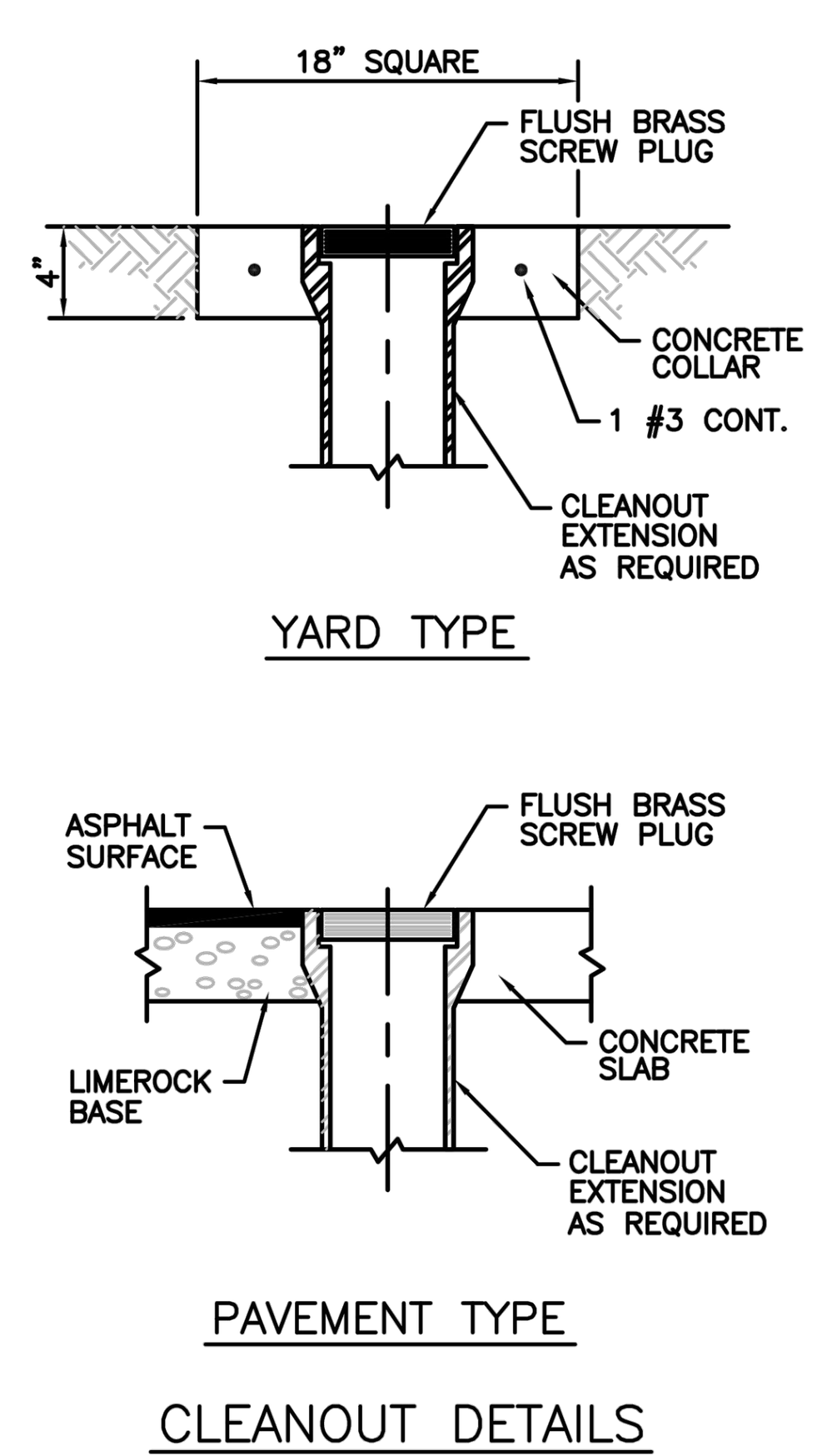

ISSUED: 03/01/1994	DEPARTMENT OF PUBLIC UTILITIES STANDARD DETAIL	REVISED: 06/08/2014
DRAWN: EAM	SEWER SERVICE CONNECTION AND CLEANOUT AT PROPERTY LINE	DRAWING NO. S-12
APPROVED: XXX		

THOMAS ENGINEERING GROUP
CIVIL ENGINEERS - PROJECT MANAGERS - LAND PLANNING - LANDSCAPE ARCHITECTS
1502 W. FLETCHER AVE. UNIT NO. 101 TAMPA, FL 33612 P: (813) 379-4100
125 W. INDIANTOWN RD. SUITE 206 JUPITER, FL 33458 P: 561-203-7503

THE INFORMATION, DESIGN AND CONTENT OF THIS PLAN ARE PROPRIETARY AND SHALL NOT BE COPIED OR USED FOR ANY PURPOSE WITHOUT PRIOR WRITTEN AUTHORIZATION FROM THOMAS ENGINEERING GROUP, LLC. ONLY APPROVED, SIGNED AND SEALED PLANS SHALL BE UTILIZED FOR CONSTRUCTION PURPOSES. © 2015 THOMAS ENGINEERING GROUP, LLC.

REVISIONS:

REV:	DATE:	COMMENT:	BY:

Sunshine 811
Call 811 or visit sunshine811.com two full business days before digging to have buried facilities located and marked.
Check positive response codes before you dig!

PROJECT No.: F220134
DRAWN BY: CAD
CHECKED BY: MAT
DATE: 01/09/2023
CAD I.D.: F220134 WSU-DTLS

PROJECT:

PRELIMINARY SOUTH TOWER PLANS

FOR

THE RELATED GROUP

CITY OF HOLLYWOOD
FLORIDA

THOMAS ENGINEERING GROUP
6300 NW 31ST AVENUE
FORT LAUDERDALE, FL 33309
PH: (954) 202-7000
FX: (954) 202-7070
www.ThomasEngineeringGroup.com

MICHAEL A. TROXELL
PROFESSIONAL ENGINEER
FLORIDA LICENSE No. 50572
March 10, 2023
FLORIDA BUSINESS CERT. OF AUTH. No. 27528

SHEET TITLE:

UTILITY DETAILS

SHEET NUMBER:

U-03

Printed on Friday, March 10, 2023, 11:38 AM by Cesar DeLosSantos

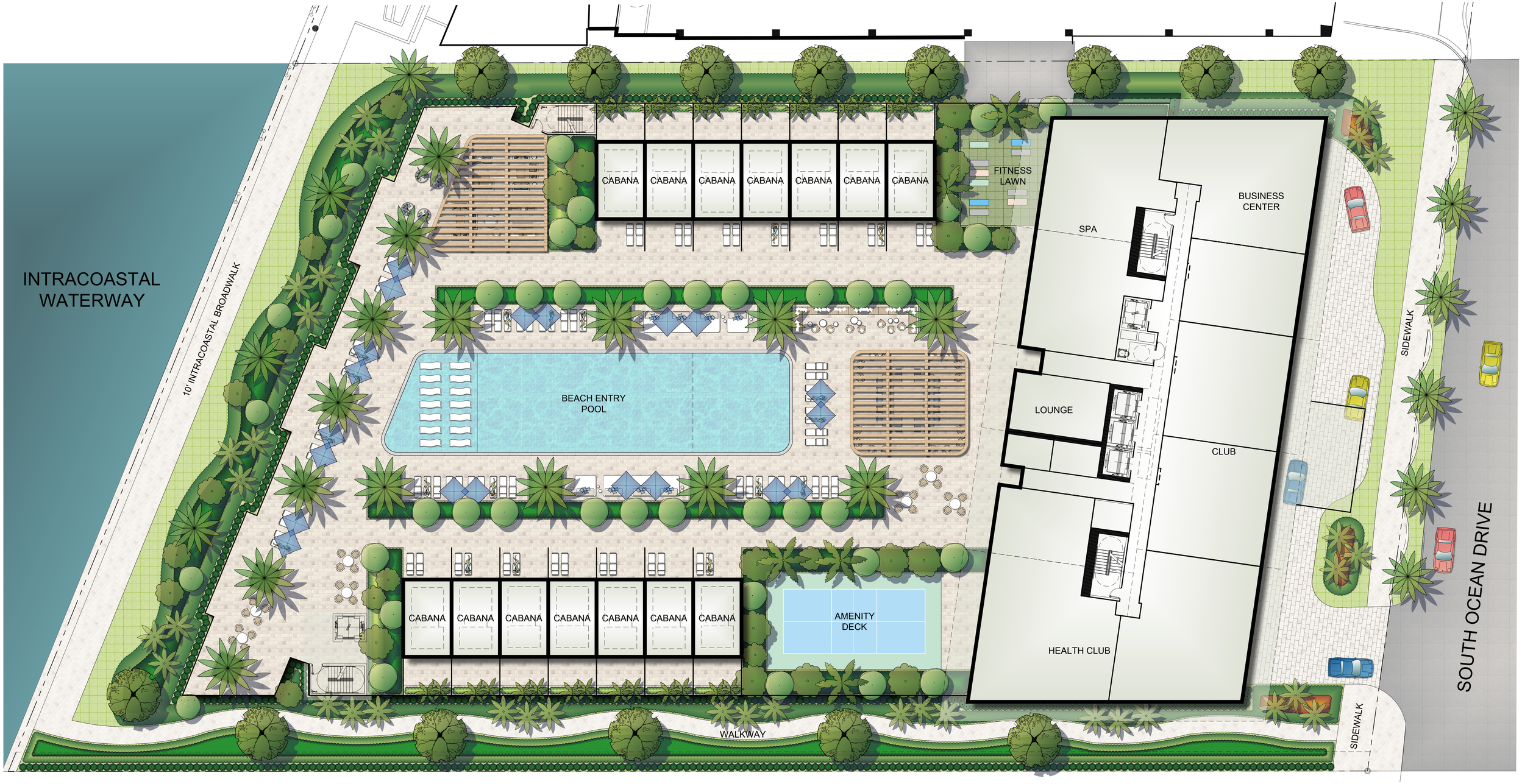

DIPLOMAT LANDING

SCHEMATIC PLAN SCALE: NTS

RELATED

WITKIN HULTS + PARTNERS

NORTH

City of Hollywood

Staff Summary

Hollywood City Hall
2600 Hollywood Blvd
Hollywood, FL 33020
http://www.hollywoodfl.org

File Number: 2. 2023_0403

Agenda Date:	4/3/2023
To:	Technical Advisory Committee
Title:	FILE NO.: 23-DP-36 APPLICANT: City of Hollywood CRA LOCATION: 1845 Hollywood Boulevard REQUEST: Site Plan Review for a Mixed-use development with 371 residential units, approximately 7,000 sq. ft. of commercial space (Soleste La Piazza)

PLANNING DIVISION



2600 Hollywood Boulevard Room 315
Hollywood, FL 33022

File No. (internal use only): _____

GENERAL APPLICATION

CITY OF Hollywood FLORIDA

Tel: (954) 921-3471
Fax: (954) 921-3347

This application must be completed in full and submitted with all documents to be placed on a Board or Committee's agenda.

The applicant is responsible for obtaining the appropriate checklist for each type of application.

Applicant(s) or their authorized legal agent must be present at all Board or Committee meetings.

At least one set of the submitted plans for each application must be signed and sealed (i.e. Architect or Engineer).

Documents and forms can be accessed on the City's website at

http://www.hollywoodfl.org/DocumentCenter/Home/View/21



APPLICATION TYPE (CHECK ONE):

☒ Technical Advisory Committee ☐ Historic Preservation Board
☐ City Commission ☐ Planning and Development Board

Date of Application: 03/20/2023

Location Address: 1845 Hollywood Blvd, Hollywood, FL 33020
Lot(s): 1-14 Block(s): 41 Subdivision: Hollywood 1-21 B
Folio Number(s): 5142 15 01 7840
Zoning Classification: GU Land Use Classification: RAC
Existing Property Use: Mixed-Use Sq Ft/Number of Units: 41,818 / 21
Is the request the result of a violation notice? ( ) Yes (x) No If yes, attach a copy of violation.
Has this property been presented to the City before? If yes, check al that apply and provide File Number(s) and Resolution(s): N/A

☐ Economic Roundtable ☐ Technical Advisory Committee ☐ Historic Preservation Board
☐ City Commission ☐ Planning and Development

Explanation of Request: Site Plan Approval

Number of units/rooms: 371 Sq Ft: 406,058
Value of Improvement: N/A Estimated Date of Completion: 02/2026
Will Project be Phased? ( ) Yes (x)No If Phased, Estimated Completion of Each Phase

Name of Current Property Owner: City of Hollywood CRA
Address of Property Owner: 1948 Harrison St, Hollywood, FL 33020
Telephone: (954) 924-2980 Fax: _____ Email Address: _____
Name of Consultant/Representative/Tenant (circle one): 1845 Young Circle Holdings, LLC
Address: 6201 SW 70th St, Miami, FL 33143 Telephone: (305) 663-1002
Fax: _____ Email Address: ndiaz@eigfl.com
Date of Purchase: _____ Is there an option to purchase the Property? Yes ( ) No ( )
If Yes, Attach Copy of the Contract.
List Anyone Else Who Should Receive Notice of the Hearing: Debbi Orshefsky, Esq.
Address: 515 East Las Olas Blvd, Suite 1200, Ft. Lauderdale, FL 33301
Email Address: debbie.orshefsky@hklaw.com

PLANNING DIVISION



2600 Hollywood Boulevard Room 315
Hollywood, FL 33022

File No. (internal use only):_____

GENERAL APPLICATION

CERTIFICATION OF COMPLIANCE WITH APPLICABLE REGULATIONS

The applicant/owner(s) signature certifies that he/she has been made aware of the criteria, regulations and guidelines applicable to the request. This information can be obtained in Room 315 of City Hall or on our website at www.hollywoodfl.org. The owner(s) further certifies that when required by applicable law, including but not limited to the City's Zoning and Land Development Regulations, they will post the site with a sign provided by the Office of Planning and Development Services. The owner(s) will photograph the sign the day of posting and submit photographs to the Office of Planning and Development Services as required by applicable law. Failure to post the sign will result in violation of State and Municipal Notification Requirements and Laws.

(I)(We) certify that (I) (we) understand and will comply with the provisions and regulations of the City's Zoning and Land Development Regulations, Design Guidelines, Design Guidelines for Historic Properties and City's Comprehensive Plan as they apply to this project. (I)(We) further certify that the above statements and drawings made on any paper or plans submitted herewith are true to the best of (my)(our) knowledge. (I)(We) understand that the application and attachments become part of the official public records of the City and are not returnable.

Signature of Current Owner: _____ Date: 3/20/2023

PRINT NAME: Jorge Camejo, as Executive Director, City of Hollywood CRA Date: 03/20/2023

Signature of Consultant/Representative: _____ Date: 03/20/2023

PRINT NAME: Roberto J. Suris, Manager of 1845 Young Circle Holdings, LLC. Date: 03/20/2023

Signature of Tenant: _____ Date: _____

PRINT NAME: _____ Date: _____

Current Owner Power of Attorney

I am the current owner of the described real property and that I am aware of the nature and effect the request for development approval to my property, which is hereby made by me or I am hereby authorizing Young Circle Holdings, LLC to be my legal representative before the Planning & Dev. Board (Board and/or Committee) relative to all matters concerning this application.

Sworn to and subscribed before me
this 21st day of March

LISA ANN LIOTTA
MY COMMISSION # GG 985743
EXPIRES: May 7, 2024
Bonded Thru Notary Public Underwriters

Notary Public

State of Florida
My Commission Expires: 05/07/2024 (Check One) ✓ Personally known to me; OR ___ Produced Identification _____

Signature of Current Owner

JORGE CAMEJO

Print Name

FORMGROUP
architecture + planning

FORMGROUP
architecture + planning

Project Name: Soleste La Piazza
Project address: 1845 Hollywood Boulevard, Hollywood, FL 33020
Response Date: March 20, 2023

Letter of Intent

As the Architect of record for the above referenced project, I am pleased to proffer the following design intent statement in support of the project.

The proposed project is located at 1845 Hollywood Boulevard within the heart of the City of Hollywood. The site has full frontage along Young Circle, nestled between Tyler Street and Hollywood Boulevard with a secondary road on its rear, North 19th Avenue. The building will be a new construction of a mixed-use development and will consist of 371 apartment units, ±7,000 sf. of Retail, ±1,700 sf. of Office, amenities, and parking. The project will be 22-stories with the top of roof reaching at a height of 228'-4".

Like most multi-family mixed-use buildings in the sub-tropical urban setting of South Florida, we felt that the project site and it's prevailing environmental orientation had to be a major driving force for the design. We maximized the frontage along all sides to take advantage of the street and city views the site has to offer.

The building is broken down into a 13-story tower resting on a 9-story podium. This ties into the proportion and typology existing along Young Circle and promotes a more pedestrian-friendly approach to our building. With retail on all three major roads of our site, this contributes to the social and commercial activity existing in the area.

This is a complex site, but we believe the design manages to take full advantage of its dramatic features while being respectful to the City of Hollywood and urban paths that surround it.

We look forward to bringing this project to the City of Hollywood and we hope that it will be a strong contributor to its continued growth and success.

Please feel free to contact me with any questions you may have or if I can be of assistance in any way.

Sincerely,



Omar A. Morales
Principal Architect

FORMGROUP
architecture + planning

Project Name: Soleste La Piazza
Project address: 1845 Hollywood Boulevard, Hollywood, FL 33020
Response Date: March 20, 2023

Statement of Conformance with Criteria for Design

As stated in the city of Hollywood's Zoning & Land Development Regulations, Article 5.

The proposed project is located at 1845 Hollywood Boulevard in the heart of the City of Hollywood. The site has a full frontage along Young Circle, nestled between Tyler Street and Hollywood Boulevard with a secondary road on its rear, North 19th Avenue. The building will be a new mixed-use development and will consist of 371 apartment units, ±7,000 sf. of Retail, ±1,700 sf. of Office, amenities, and parking. The project will be 22-stories with a roof height of 228'-4".

- Criteria 1: Architectural and Design components. Architecture refers to the architectural elements of exterior building surfaces. Architectural details should be commensurate with the building mass. The use of traditional materials for new architectural details is recommended. Design of the building(s) shall consider aesthetics and functionality, including the relationship of the pedestrian with the built environment.

Response: The new high-rise design is contemporary with various elements responding to its function. The building also reflects its surroundings and context with its colors and massing. We proposed that the building has a podium base where the parking is concealed and completely lined with residential units facing young Circle. The podium will provide a more sensible scale to the pedestrian in making the building approachable. On all three major roads, retail will be accessible from the sidewalk as to invite patrons and extend itself into the social and commercial activity of the area. The tower will be decorated with fenestration to allow the building to breathe and provide views to its residents. The exterior of the building will consist of stucco with score lines and a combination of aluminum and glass railings. The prominent tower feature on the Northeast corner mirrors the softness of Young Circle's roundabout and serves to mark the entry point to the circle.

- Criteria 2: Compatibility. The relationship between existing architectural styles and proposed construction, including how each building along the street relates to the whole and the pattern created with adjacent structures and the surrounding neighborhoods. Buildings should contain architectural details that are characteristic of the surrounding neighborhood.

Response: The project tries to both reflect the growing density in the Young Circle district and stand out with it's own prominent architectural features. Street level features include and articulated ground level façade which starts at the main tower on the Northeast corner and follows along with large windows and recessed openings along the Young Circle main façade. This implied colonnade will create a very vibrant pedestrian realm where visitors will be able to enjoy the commercial uses and connect to other buildings along the circle. design compliments itself to aesthetics of existing high-rise buildings that wrap around Young Circle. The building's design elements and color pallet are consistent with the desired characteristics of the context in the area. The building's podium was designed with staggering balconies with vertical linear breaks to relate to the constant flow of vehicular traffic along the circle. This provides movement and rhythm that echoes the live music at the Young Circle Park.

- Criteria 3: Scale/Massing. Buildings shall be proportionate in scale, with a height which is consistent with the surrounding structures. Building mass shall reflect a simple composition of basic architectural details in relation to its length, width, height, lot coverage, and setting of the structure in context with adjacent buildings. Architectural details include, but are not limited to, banding molding, and fenestration.

Response: The building's height is proportional to the other high-rise buildings already constructed along the circle. It also respects the setback at all sides and extends itself to widen sidewalks to promote pedestrian walkability. This encourages more pedestrian friendly spaces and the opportunity to expand on the existing landscaping for a more verdant urban appeal. The building also takes advantage of the allowable lot coverage to maximize efficiency in parking, commercial and residential uses. There is a significant recess above the podium along west side to increase views and movement in the building tower. This creates an opportunity for amenities and recreational pool deck or residents to enjoy. The distribution of volumes of a building is done as a shared approach by many of the buildings along Young Circle to create a more fluid typological staple of the city of Hollywood.

- Criteria 4: Landscaping. Landscaped areas should contain a variety of native and other compatible plant types and forms and be carefully integrated with existing buildings and paved areas. Existing mature trees and other significant plants on the site should be preserved.

Response: The project has existing Royal Palms on its north, east and south side of the property. This reinforces its sub-tropical gateway already proposed along Tyler Street, Young Circle and Hollywood Boulevard. Along North 19th Avenue, portions of the sidewalk would be modified to accommodate new driveways. The landscaping along this avenue will enhance the design of the building and continue the sub-tropical language while also using native vegetation.

We look forward to bringing this project to the City of Hollywood and we hope that it will be a strong contributor to its continued growth and success.

Please feel free to contact me with any questions you may have or if I can be of assistance in any way.

Sincerely,



Omar A. Morales
Principal Architect

ALTA/NSPS LAND TITLE SURVEY
BOUNDARY & TOPOGRAPHIC SURVEY
LA PIAZZA

NOTE: The undersigned and CRAVEN THOMPSON & ASSOCIATES, INC. make no representations or guarantees as to the information reflected hereon pertaining to easements, right-of-way, set back lines, reservations, agreements and other similar matters, and this instrument is not intended to reflect or set forth all such matters. Such information should be obtained and further, confirmed by others through appropriate title verification.
NOTE: Lands shown hereon were not abstracted for right-of-way and/or easements of record.

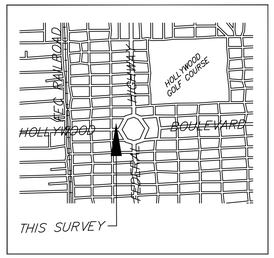

LOCATION MAP
NOT TO SCALE

SCALE: 1"=30'
0 30' 60'
GRAPHIC SCALE IN FEET

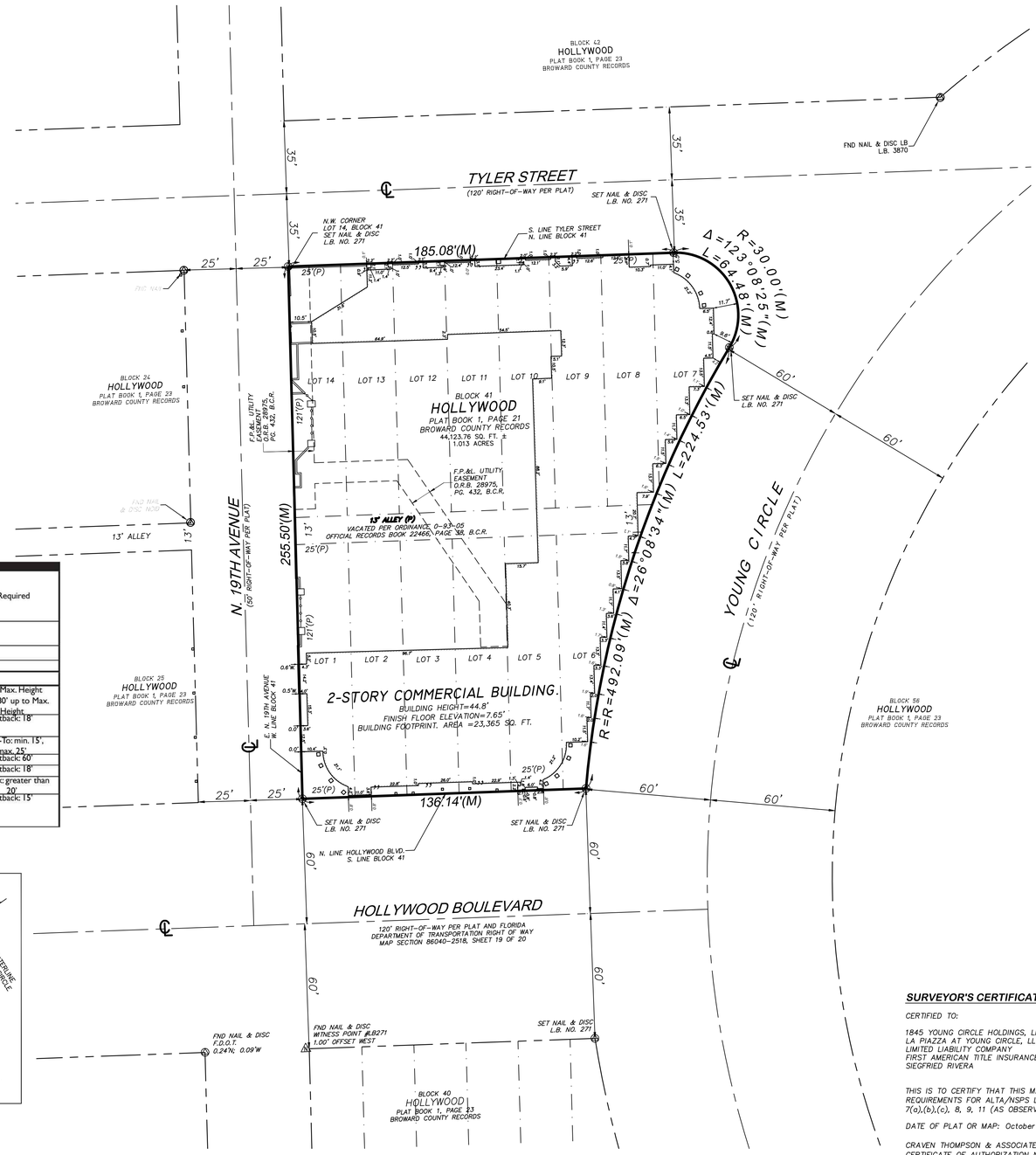

ABBREVIATION LEGEND

CONC.	CONCRETE
CLF	CHAIN LINK FENCE
O/S	OFFSET
PLS	PROFESSIONAL LAND SURVEYOR
R/W	RIGHT-OF-WAY
R.E.	RIM ELEVATION
I.E.	INVERT ELEVATION
T.O.N.	TOP OF NUT
B.O.S.	BOTTOM OF STRUCTURE
RCP	REINFORCED CONCRETE PIPE
SBT	SOUTHERN BELL TELEPHONE
P.R.B.	POLLUTION RETARDING BAFFLE
R	RADIUS
D	DELTA
A	ARC LENGTH
F.F.E.	FINISHED FLOOR ELEVATION
P.O.C.	POINT OF COMMENCEMENT
P.O.B.	POINT OF BEGINNING
ENC.	ENCROACHMENT
FND	FOUND
F.D.O.T.	FLORIDA DEPARTMENT OF TRANSPORTATION
LB	LICENSED BUSINESS
TYP.	TYPICAL
PVC	POLY VINYL CHLORIDE PIPE

ZONING DATA

DOWNTOWN HOLLYWOOD YOUNG CIRCLE VISION, ZONING, AND DESIGN STANDARDS PREPARED BY ZYSCOVICH, LAST REVISED 04.19.2004.

Sub Block 41

Boundaries/ Required Uses	North	Tyler St.	Ground Floor Pedestrian Oriented Uses Required
	East	Young Circle	
	South	Hollywood Blvd.	
	West	N. 19th Ave.	
Existing Historical Structures	None		
Max. FAR	3.75 x Net Lot Area		
Max. Building Height	150 feet or 15 Stories, whichever is less (Subject to Site Area Requirements)		

Build-To/Setbacks

Stories/Elevation	Ground-Floor Up to 15'	2nd – 5th Story From 15' up to 55'	6th – 7th Story From 55' up to 80'	8th – Max. Height From 80' up to Max. Height
Tyler St.	Setback: 0'	Setback: 0' Residential Setback: 5'	Setback: 18'	Setback: 18'
Young Circle	Build-To: 5'	Build-To: 0'	Build-To: 15'-25'	Build-To: min. 15', max. 25'
Hollywood Blvd.	Setback: 0'	Setback: 0'	Setback: 45'	Setback: 60'
N. 19th Ave.	Setback: 0'	Setback: 0'	Setback: 18'	Setback: 18'
Interior Side	Setback: 0'	Setback: 0'	Setback: 20'	Setback: greater than 20'
Interior Rear/Alley (when property is not aggregated)	Setback: 15'	Setback: 15'	Setback: 15'	Setback: 15'

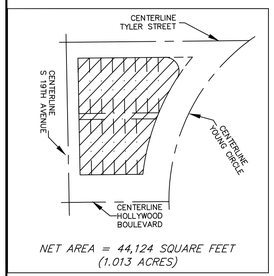

NET AREA = 44,124 SQUARE FEET
(1.013 ACRES)

NET AREA DETAIL
NOT TO SCALE

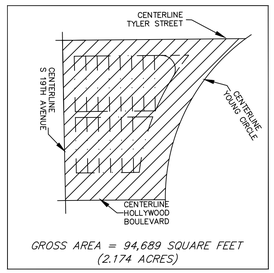

GROSS AREA = 94,689 SQUARE FEET
(2.174 ACRES)

GROSS AREA DETAIL
NOT TO SCALE

SEE SHEET S-2 FOR SITE LOCATIONS, SYMBOL AND ABBREVIATION LEGENDS AND TREE LIST.

EXSITING PARKING TABLE	
REGULAR SPACES	39
MOTOR CYCLE SPACES	1
HANDICAP SPACES	3

TITLE NOTES:

THE TITLE INFORMATION SHOWN HEREON IS BASED ON A COMMITMENT PREPARED BY FIRST AMERICAN TITLE INSURANCE COMPANY, FILE NO: 1062-5978269, EFFECTIVE DATE APRIL 25, 2022, AT 8:00 AM AND IS SUBJECT TO ALL DEFECTS, LIENS, ENCUMBRANCES, ADVERSE CLAIMS OR OTHER MATTERS, IF ANY, CREATED, APPEARING IN THE PUBLIC RECORDS OR ATTACHING SUBSEQUENT TO THE EFFECTIVE DATE THEREOF.

SCHEDULE B-II EXCEPTIONS:

ITEMS 1 THROUGH 8 ARE NOT A MATTER OF SURVEY.

9. AS CONTAINED ON THE PLAT OF HOLLYWOOD RECORDED IN PLAT BOOK 1, PAGE 21, AS AFFECTED BY ORDINANCE NO. O-93-05 BY THE CITY OF HOLLYWOOD RECORDED IN OFFICIAL RECORDS BOOK 22466, PAGE 38, OF THE PUBLIC RECORDS OF BROWARD COUNTY, FLORIDA. AFFECTS THE SUBJECT PROPERTY. BLANKET IN NATURE.

10. TERMS, COVENANTS, CONDITIONS, RESTRICTIONS, RESERVATIONS AND OTHER PROVISIONS, AS SET FORTH IN THAT CERTAIN LEASE AND DEVELOPMENT AGREEMENT BETWEEN THE CITY OF HOLLYWOOD COMMUNITY REDEVELOPMENT AGENCY AS OWNER/LANDLORD, AND LA PIAZZA AT YOUNG CIRCLE, L.C., AS TENANT/LESSEE, RECORDED ON DECEMBER 2, 1997 IN OFFICIAL RECORDS BOOK 27346, PAGE 321, AS SUPPLEMENTED BY THAT CERTAIN AFFIDAVIT RECORDED IN OFFICIAL RECORDS BOOK 28575,PAGE 647. AFFECTS THE SUBJECT PROPERTY. BLANKET IN NATURE.

11. EASEMENT(S) IN FAVOR OF FLORIDA POWER AND LIGHT COMPANY SET FORTH IN INSTRUMENT(S) RECORDED IN OFFICIAL RECORDS BOOK 28975, PAGE 432. AFFECTS THE SUBJECT PROPERTY. PLOTTER HEREON.

12. LANDLORD'S NOTICE PROHIBITING LIENS FOR IMPROVEMENTS OF LEASEHOLD PURSUANT TO FLORIDA STATUTE 713.10 RECORDED IN OFFICIAL RECORDS BOOK 29383, PAGE 1022; AND NOTICE OF LIEN PROHIBITION RECORDED IN OFFICIAL RECORDS BOOK 45045, PAGE 888. AFFECTS THE SUBJECT PROPERTY. BLANKET IN NATURE.

13. THE RIGHTS OF TENANTS (OCCUPYING ALL OR PART OF THE INSURED LAND UNDER UNRECORDED LEASES OR RENTAL AGREEMENTS) IN POSSESSION, AS TENANTS ONLY, WITH NO OPTIONS TO PURCHASE OR RIGHTS OF FIRST REFUSAL IN FAVOR OF SAID TENANTS, AS LISTED ON THE ATTACHED RENT ROLL SHOWN HEREIN AS EXHIBIT "B" (AND AS REQUIRED IN SCHEDULE B-SECTION 1 HEREIN, AND TO BE ATTACHED TO THE FINAL POLICIES AS EXHIBIT "B", WHEN ISSUED). NO RECORDINGS OR LEGAL DESCRIPTIONS TO REVIEW.

LEGAL DESCRIPTION:

LOTS 1 THROUGH 14, BLOCK 41, HOLLYWOOD, ACCORDING TO THE MAP OR PLAT THEREOF, AS RECORDED IN MAP BOOK 1, PAGE 21, OF THE PUBLIC RECORDS OF BROWARD COUNTY, FLORIDA, TOGETHER WITH THE VACATED 13 FOOT ALLEY DESCRIBED IN OFFICIAL RECORDS BOOK 22466, PAGE 38, OF THE PUBLIC RECORDS OF BROWARD COUNTY, FLORIDA.

SAID LANDS SITUATE IN THE CITY OF HOLLYWOOD, BROWARD COUNTY, FLORIDA AND CONTAIN 44,124 SQUARE FEET (1.013 ACRES) MORE OR LESS.

SURVEYOR'S NOTES:

1. THE LEGAL DESCRIPTION FOR THE PROPERTY SHOWN HEREON WAS OBTAINED FROM TITLE COMMITMENT PREPARED BY FIRST AMERICAN TITLE INSURANCE COMPANY FILE NUMBER 1062-5978269, APRIL 25, 2022 AT 8:00 AM. THE EASEMENTS SHOWN HEREON ARE BASED ON THE COMMITMENT OF TITLE PREPARED BY FIRST AMERICAN TITLE INSURANCE COMPANY, COMMITMENT NUMBER 1113479, JULY 13, 2021 AT 11:00 PM
2. THIS SKETCH OF BOUNDARY AND TOPOGRAPHIC SURVEY WAS PREPARED IN ACCORDANCE WITH THE STANDARDS OF PRACTICE FOR SURVEYING ESTABLISHED BY THE BOARD OF PROFESSIONAL SURVEYORS AND MAPPERS IN CHAPTER 5J-17, FLORIDA ADMINISTRATIVE CODES, PURSUANT TO SECTION 472.027, FLORIDA STATUTES.
3. THE EXTERIOR BUILDING DIMENSIONS SHOWN HEREON REPRESENT THE OVERALL SIZE OF THE BUILDING (FOOTPRINT). SUBSURFACE BUILDING FOOTINGS AND SUPPORTS WERE NOT LOCATED. CERTAIN ARCHITECTURAL FEATURES MAY NOT BE SHOWN ON THE SURVEY. ROOF OVERHANGS ARE NOT SHOWN UNLESS OTHERWISE NOTED. BUILDING DIMENSIONS AND BUILDING SETBACKS ARE SHOWN ROUNDED TO THE NEAREST ONE-TENTH (0.1') OF A FOOT. BEFORE DESIGN OF IMPROVEMENTS CRITICAL DIMENSIONS SHOWN BE CONFIRMED.
4. THIS SURVEY IS LIMITED TO THE LOCATION OF ABOVE GROUND IMPROVEMENTS ONLY. UNDERGROUND UTILITIES, FOUNDATIONS OR OTHER BURIED ENCROACHMENTS WERE NOT LOCATED IN CONNECTION WITH THIS SURVEY UNLESS OTHERWISE NOTED.
5. THE TOPOGRAPHICAL MEASUREMENTS SHOWN HEREON WERE OBTAINED USING A "LEICA TC-700 SERIES" TOTAL STATION AND "TDS" DATA COLLECTION SOFTWARE. THE ACCURACY OF CONTROL SURVEY DATA HAS BEEN VERIFIED BY REDUNDANT MEASUREMENTS OR TRAVERSE CLOSURES.
6. SHEET V-1 OF THIS MAP IS INTENDED TO BE DISPLAYED AT A SCALE OF 1"=30' OR SMALLER. SHEET V-2 OF THIS MAP IS INTENDED TO BE DISPLAYED AT A SCALE OF 1"=30' OR SMALLER THE HORIZONTAL FEATURES SHOWN HEREON ARE PLOTTED TO WITHIN 1/30 OF THE MAP SCALE. HORIZONTAL FEATURE LOCATIONS ARE TO THE CENTER OF THE SYMBOL AND MAY BE ENLARGED FOR CLARITY AND MAY NOT REPRESENT THE ACTUAL SIZE OR SHAPE OF THE FEATURE.
7. ADDITIONS AND DELETIONS TO SURVEY MAPS AND REPORTS BY OTHER THAN THE SIGNING PARTY OR PARTIES IS PROHIBITED WITHOUT WRITTEN CONSENT OF THE UNDERSIGNED. THIS DOCUMENT CONSISTS OF 2 SHEETS AND EACH SHEET SHALL NOT BE CONSIDERED FULL, VALID AND COMPLETE UNLESS ATTACHED TO THE OTHER.
8. SUBSURFACE FEATURES ARE NOT SHOWN HEREON. THIS SITE COULD HAVE UNDERGROUND INSTALLATIONS THAT ARE NOT SHOWN HEREON. BEFORE DESIGN, CONSTRUCTION, OR EXCAVATION CONTACT 811 AND/OR THE APPROPRIATE UTILITY COMPANIES FOR FIELD VERIFICATION OF UTILITIES.
9. THE ELEVATIONS SHOWN HEREON ARE FOR THE PURPOSE OF INDICATING THE GROUND ELEVATION ONLY AT THE POSITION SHOWN AND IN NO WAY INDICATE ELEVATIONS AT ANY OTHER POINT THAN THAT SHOWN HEREON AND DO NOT DETERMINE SUBSURFACE CONDITIONS.
10. AREA COMPUTATIONS, WHEN SHOWN IN ACRES, ARE ROUNDED TO THE NEAREST ONE-HUNDREDTH OF AN ACRE, AND WHEN SHOWN IN SQUARE FEET ARE ROUNDED TO THE NEAREST SQUARE FOOT. THE AREA FIGURES SHOWN HEREON SHOULD NOT BE UTILIZED AS THE BASIS OF PURCHASE PRICE FOR A REAL ESTATE CLOSING, WITHOUT PRIOR VERIFICATION OF THE AREA FIGURES, IN WRITING FROM THE SIGNING SURVEYOR. NET AREA OF THE PARCEL (AREA ENCOMPASSED BY THE PROPERTY LINES) 1.013 ACRES (44,124 SQUARE FEET) MORE OR LESS. GROSS AREA OF PARCEL (INCLUDING AREA OUT TO THE CENTERLINE OF ADJACENT ROADWAYS) IS 2.174 ACRES (94,689 SQUARE FEET) MORE OR LESS.
11. CERTAIN FEATURES ARE REPRESENTED BY THE SYMBOLS REFLECTED IN THIS MAP. THE LEGEND OF FEATURES MAY HAVE BEEN ENLARGED FOR CLARITY AND MAY NOT REPRESENT THE ACTUAL SHAPE OR SIZE OF THE FEATURE. THE SYMBOLS HAVE BEEN PLOTTED AT THE APPROXIMATE CENTER OF THE FEATURE BASED UPON THE FIELD LOCATION.
12. THE SURVEYOR DID NOT INSPECT THIS PROPERTY FOR ENVIRONMENTAL HAZARDS.
13. THE INFORMATION DEPICTED ON THIS SKETCH OF SURVEY REPRESENTS THE RESULTS OF A FIELD SURVEY ON THE DATE INDICATED ON THE BORDER OF THE DRAWING AND CAN ONLY BE CONSIDERED VALID FOR THIS DATE AND INDICATES THE GENERAL CONDITIONS EXISTING AT THE TIME OF THE FIELD SURVEY. THE INTENT OF THIS SURVEY IS TO ESTABLISH THE BOUNDARY OF THE PROPERTY DESCRIBED HEREON BASED ON THE LEGAL DESCRIPTION AND FOUND MONUMENTATION AND TO SHOW THE IMPROVEMENTS WITHIN THE SITE AND WITHIN THE ADJACENT PUBLIC RIGHT OF WAY AS THEY RELATE TO THE PROPERTY BOUNDARY.
14. THE ELEVATIONS SHOWN HEREON ARE BASED ON THE NORTH AMERICAN VERTICAL DATUM OF 1988 AND REFERENCED TO THE FOLLOWING BENCHMARK, NATIONAL GEODETIC SURVEY BENCHMARK NO. M312, A A BRASS DISC SET ON TOP OF A RETAINING WALL, 17.4 FEET SE OF THE NE CORNER OF THE CITY HALL BUILDING, AND 8 FEET E OF THE E WALL OF THE BUILDING., ELEVATION = 13.44.

FLOOD ELEVATION INFORMATION

A) COMMUNITY NUMBER	125113
B) DATE OF FIRM INDEX	AUGUST 18, 2014
C) DATE OF FIRM MAP	AUGUST 18, 2014
D) FIRM ZONE	X
E) PANEL NUMBER	12011C0569
F) SUFFIX	H
G) BASE FLOOD ELEVATION	N/A

ADDRESS:

1845-1885 HOLLYWOOD BOULEVARD
HOLLYWOOD, FLORIDA 33020

SURVEYOR'S CERTIFICATE:

CERTIFIED TO:

1845 YOUNG CIRCLE HOLDINGS, LLC, A DELAWARE LIMITED LIABILITY COMPANY
LA PIAZZA AT YOUNG CIRCLE, LLC, A DELAWARE LIMITED LIABILITY COMPANY SUCCESSOR BY CONVERSION TO LA PIAZZA AT YOUNG CIRCLE, L.C., A FLORIDA LIMITED LIABILITY COMPANY
FIRST AMERICAN TITLE INSURANCE COMPANY
SIEGFRIED RIVERA

THIS IS TO CERTIFY THAT THIS MAP OR PLAT AND THE SURVEY ON WHICH IT IS BASED WERE MADE IN ACCORDANCE WITH THE 2021 MINIMUM STANDARD DETAIL REQUIREMENTS FOR ALTA/NSPS LAND TITLE SURVEYS, JOINTLY ESTABLISHED AND ADOPTED BY ALTA AND NSPS, AND INCLUDES ITEMS 1, 2, 3, 4, 6(a), 7(a),(b),(c), 8, 9, 11 (AS OBSERVED AT THE SURFACE), 14, AND 17 OF TABLE A THEREOF. THE FIELDWORK WAS COMPLETED ON OCTOBER 7, 2022.

DATE OF PLAT OR MAP: October 7, 2022

CRAVEN THOMPSON & ASSOCIATES, INC.
CERTIFICATE OF AUTHORIZATION NO. LB271

RICHARD G. CRAWFORD JR. – FOR THE FIRM
PROFESSIONAL SURVEYOR & MAPPER NO. 5371
STATE OF FLORIDA

THIS SURVEY MAP AND REPORT OR COPIES THEREOF ARE NOT VALID WITHOUT THE SIGNATURE AND ORIGINAL RAISED SEAL OR A UNIQUE ELECTRONIC SIGNATURE OF A FLORIDA LICENSED PROFESSIONAL SURVEYOR AND MAPPER UNDER CHAPTER RULES 5J-17.061 & 5J-17.062 FLORIDA ADMINISTRATIVE CODE.

DATE:	10/XX/22
SCALE:	1"=20'
DRAWN BY:	RGC
CHECKED BY:	RP
FIELDBOOK:	2960
PAGE(S):	45-

BY:	DESCRIPTION:	DATE:

CRAVEN • THOMPSON AND ASSOCIATES, INC.
ENGINEERS • PLANNERS • SURVEYORS
3563 N.W. 53RD STREET, FORT LAUDERDALE, FLORIDA 33309
FAX: (954) 739-6409 TEL.: (954) 739-6400
FLORIDA LICENSED ENGINEERING, SURVEYING & MAPPING BUSINESS No. 271
FLORIDA LICENSED LANDSCAPE ARCHITECTURE BUSINESS No. C000114

MATERIAL SHOWN HEREON IS THE PROPERTY OF CRAVEN THOMPSON & ASSOCIATES, INC. AND SHALL NOT BE REPRODUCED IN WHOLE OR IN PART WITHOUT WRITTEN PERMISSION OF CRAVEN THOMPSON & ASSOCIATES, INC. COPYRIGHT 2022

LA PIAZZA
1845-1885 HOLLYWOOD BOULEVARD
HOLLYWOOD, FLORIDA 33020

PREPARED FOR:
1845 YOUNG CIRCLE HOLDINGS, LLC, A DELAWARE LIMITED LIABILITY COMPANY

BOUNDARY & TOPOGRAPHIC SURVEY

SEAL

PROJECT NO.
22-0064-001

V-1

SHEET 1 OF 2

R:\Survey\2022\22-0064-001-01 LA PIAZZA\Drawings\22-0064-001 BASE CALC FILE.dwg [V-1 (24x36)] Mar 17, 2023 2:34pm RCRAWFORD

ALTA/NSPS LAND TITLE SURVEY
BOUNDARY & TOPOGRAPHIC SURVEY
LA PIAZZA

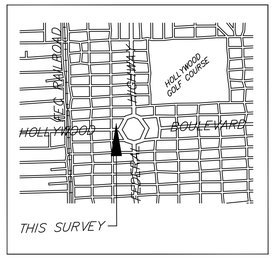

LOCATION MAP
NOT TO SCALE



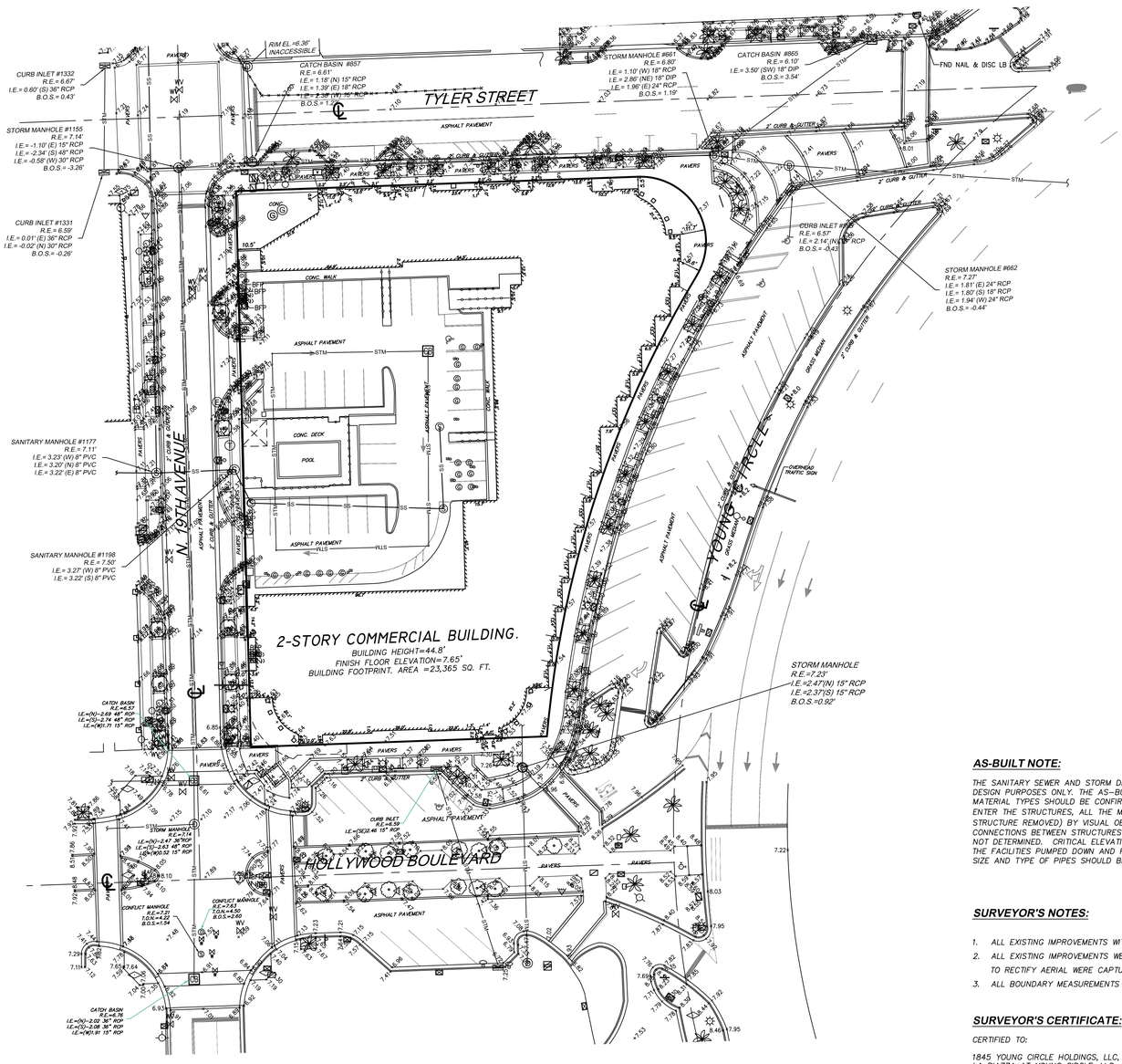

SEE SHEET V-1 FOR BOUNDARY SURVEY, DESCRIPTION, SURVEYOR'S NOTES, TITLE NOTES, SURVEYOR'S CERTIFICATION, LOCATION MAP AND FIELD BOOK REFERENCE.

THE ELEVATIONS SHOWN HEREON ARE BASED ON THE NORTH AMERICAN VERTICAL DATUM OF 1988.

EXSITING PARKING TABLE	
REGULAR SPACES	39
MOTOR CYCLE SPACES	1
HANDICAP SPACES	3

NOTE: The undersigned and CRAVEN THOMPSON & ASSOCIATES, INC. make no representations or guarantees as to the information reflected hereon pertaining to easements, right-of-way, set back lines, reservations, agreements and other similar matters, and this instrument is not intended to reflect or set forth all such matters. Such information should be obtained and further, confirmed by others through appropriate title verification.
NOTE: Lands shown hereon were not abstracted for right-of-way and/or easements of record.

SYMBOL LEGEND

- ANCHOR
- BOLLARD
- CATCH BASIN
- CONCRETE POWER POLE
- CURB INLET
- DRAINAGE MANHOLE
- ELECTRICAL JUNCTION BOX
- ELECTICAL METER
- ELECTICAL PULL BOX
- FIRE HYDRANT
- GARBAGE CAN (ROUND)
- UNKNOWN MANHOLE
- GAS VALVE
- MONITORING WELL
- DECORATIVE LIGHT POLE
- GAS METER
- SANITARY SEWER MANHOLE
- DOUBLE DETECTOR CHECK VALVE
- SPOT ELEVATION GROUND SURFACE
- SPOT ELEVATION HARD SURFACE
- LANDSCAPE LIGHTING
- TELEPHONE MANHOLE
- TRAFFIC CONTROL BOX
- TRAFFIC PULL BOX
- TRAFFIC POLE
- WATER GATE VALVE
- WATER METER
- STREET LIGHT (5 BULBS)
- SHADE TREE & TREE NUMBER
- PALM TREE & TREE NUMBER
- PEDESTRIAN SIGNAL
- HANDICAP SPACE
- PARKING METER
- DOUBLE PARKING METER
- BUILDING LINE
- ELECTRICAL PANEL
- METAL POST
- CABLE VAULT

AS-BUILT NOTE:

THE SANITARY SEWER AND STORM DRAINAGE AS-BUILT DATA SHOWN HEREON WAS COLLECTED FOR ENGINEERING DESIGN PURPOSES ONLY. THE AS-BUILT DATA IS LIMITED TO STRUCTURE RIM ELEVATIONS ONLY. PIPE SIZES AND PIPE MATERIAL TYPES SHOULD BE CONFIRMED BEFORE DESIGN OF IMPROVEMENTS. THE SURVEYORS DID NOT PHYSICALLY ENTER THE STRUCTURES, ALL THE MEASUREMENTS AND ELEVATIONS WERE COLLECTED (WITH THE LID OF THE STRUCTURE REMOVED) BY VISUAL OBSERVATIONS IN ACTIVE FACILITIES WITH WATER AND EFFLUVIUM PRESENT. THE CONNECTIONS BETWEEN STRUCTURES WERE NOT VISUALLY INSPECTED OR VERIFIED AND THE CONDITION OF PIPING WAS NOT DETERMINED. CRITICAL ELEVATIONS AND DIMENSIONS SHOULD BE VERIFIED BEFORE DESIGN OF IMPROVEMENTS, WITH THE FACILITIES PUMPED DOWN AND PIPES CLEANED OUT. BEFORE ORDERING REPLACEMENT OR CONNECTING PIPES THE SIZE AND TYPE OF PIPES SHOULD BE CONFIRMED.

SURVEYOR'S NOTES:

1. ALL EXISTING IMPROVEMENTS WITHIN THE SUBJECT PROPERTY BOUNDARY IS EXPECTED TO BE DEMOLISHED.
2. ALL EXISTING IMPROVEMENTS WERE EXTRACTED USING A DIGITAL RECTIFIED ORTHOGRAPHIC AERIAL PRODUCES USING PIX4D, VERSION 4.6.4. IMAGES USED TO RECTIFY AERIAL WERE CAPTURED USING A PHANTOM 4 PRO. V.2 QUADCOPTER.
3. ALL BOUNDARY MEASUREMENTS ARE PER DISTANCES COMPUTED OR MEASURED FROM FIELD ADJUSTED TRAVERSE, UNLESS OTHERWISE STATED.

SURVEYOR'S CERTIFICATE:

CERTIFIED TO:

1845 YOUNG CIRCLE HOLDINGS, LLC, A DELAWARE LIMITED LIABILITY COMPANY
LA PIAZZA AT YOUNG CIRCLE, LLC, A DELAWARE LIMITED LIABILITY COMPANY SUCCESSOR BY CONVERSION TO LA PIAZZA AT YOUNG CIRCLE, L.C., A FLORIDA LIMITED LIABILITY COMPANY
FIRST AMERICAN TITLE INSURANCE COMPANY
SIEGFRIED RIVERA

THIS IS TO CERTIFY THAT THIS MAP OR PLAT AND THE SURVEY ON WHICH IT IS BASED WERE MADE IN ACCORDANCE WITH THE 2021 MINIMUM STANDARD DETAIL REQUIREMENTS FOR ALTA/NSPS LAND TITLE SURVEYS, JOINTLY ESTABLISHED AND ADOPTED BY ALTA AND NSPS, AND INCLUDES ITEMS 1, 2, 3, 4, 6(a), 7(a),(b),(c), 8, 9, 11 (AS OBSERVED AT THE SURFACE), 14, AND 17 OF TABLE A THEREOF. THE FIELDWORK WAS COMPLETED ON OCTOBER 7, 2022.

DATE OF PLAT OR MAP: October 7, 2022

CRAVEN THOMPSON & ASSOCIATES, INC.
CERTIFICATE OF AUTHORIZATION NO. LB271

RICHARD G. CRAWFORD JR. – FOR THE FIRM
PROFESSIONAL SURVEYOR & MAPPER NO. 5371
STATE OF FLORIDA

THIS SURVEY MAP AND REPORT OR COPIES THEREOF ARE NOT VALID WITHOUT THE SIGNATURE AND ORIGINAL RAISED SEAL OR A UNIQUE ELECTRONIC SIGNATURE OF A FLORIDA LICENSED PROFESSIONAL SURVEYOR AND MAPPER UNDER CHAPTER RULES 5J-17.061 & 5J-17.062 FLORIDA ADMINISTRATIVE CODE.

DATE:	10/XX/22
SCALE:	1"=20'
DRAWN BY:	RGC
CHECKED BY:	RP
FIELDBOOK:	2960
PAGE(S):	45-

DESCRIPTION:	BY:	DATE:

CRAVEN • THOMPSON AND ASSOCIATES, INC.
ENGINEERS • PLANNERS • SURVEYORS
3563 N.W. 53RD STREET, FORT LAUDERDALE, FLORIDA 33309
FAX: (954) 739-6409 TEL.: (954) 739-6400
FLORIDA LICENSED ENGINEERING, SURVEYING, & MAPPING BUSINESS No. 271
FLORIDA LICENSED LANDSCAPE ARCHITECTURE BUSINESS No. C000114

MATERIAL SHOWN HEREON IS THE PROPERTY OF CRAVEN THOMPSON & ASSOCIATES, INC. AND SHALL NOT BE REPRODUCED IN WHOLE OR IN PART WITHOUT WRITTEN PERMISSION OF CRAVEN THOMPSON & ASSOCIATES, INC. COPYRIGHT © 2022

LA PIAZZA
1845-1885 HOLLYWOOD BOULEVARD
HOLLYWOOD, FLORIDA 33020

PREPARED FOR:
1845 YOUNG CIRCLE HOLDINGS, LLC, A DELWARE LIMITED LIABILTY

BOUNDARY & TOPOGRAPHIC SURVEY

SEAL

PROJECT NO.
22-0064-001

V-2

SHEET 2 OF 2

R:\Survey\2022\22-0064-001-01 LA PIAZZA\Drawings\TOPO FILE.dwg [LAYOUT1] Mar 17, 2023 2:35pm RCRAWFORD



Soleste La Piazza

AT HOLLYWOOD

MIXED-USE DEVELOPMENT

1845 HOLLYWOOD BOULEVARD
HOLLYWOOD, FL 33020
TAC SUBMITTAL PACKAGE
MARCH 19, 2023

DRAWING LIST

ARCHITECTURE

A-0	COVER
	SURVEY
A-01	RENDERINGS
A-100	SITE PLAN & DATA
A-101	OVERALL GROUND FLOOR PLAN
A-102	TYPICAL FLOOR PLANS (LEVELS 2-9)
A-103	TYPICAL FLOOR PLANS (LEVELS 10-14)
A-104	TYPICAL FLOOR PLANS (LEVELS 15-22) & ROOF PLAN
A-200	NORTH ELEVATION
A-201	EAST ELEVATION
A-202	SOUTH ELEVATION
A-203	WEST ELEVATION
A-300	BUILDING SECTION
A-301	BUILDING SECTION
A-400	UNIT TYPES
FS-1	FIRE SET-UP PLAN

CIVIL ENGINEERING

C-1	COVER SHEET
C-2	GENERAL NOTES & SPECIFICATIONS
C-3	DEMOLITION PLAN
C-4	EROSION CONTROL PLAN
C-5	PAVING, GRADING & DRAINAGE PLAN
C-6	WATER & SEWER PLAN
C-7	PAVEMENT MARKING & SIGNAGE PLAN
C-8	PAVING, GRADING & DRAINAGE DETAILS
C-9	PAVING, GRADING & DRAINAGE DETAILS
C-10	PAVEMENT MARKING & SIGNAGE DETAILS
C-11	WATER & SEWER DETAILS
C-12	WATER & SEWER DETAILS
C-13	WATER & SEWER DETAILS
C-14	WATER & SEWER DETAILS
C-15	WATER & SEWER DETAILS
C-16	WATER & SEWER DETAILS
C-17	WATER & SEWER DETAILS

Soleste
La Piazza

DEVELOPER:
The Estate Companies

ROBERT SURIS
6201 S.W. 70th STREET, STE #200
SOUTH MIAMI, FL 33143

PH. (305) 663-1002
E: rsuris@eigfl.com

CIVIL ENGINEER:
CRAVEN THOMPSON & ASSOC., INC.
3563 N.W. 53rd STREET
FORT LAUDERDALE, FL 33309

PH. (954) 739-6400
E: rcrawford@craventhompsom.com

LANDSCAPE ARCHITECT:
GSLA DESIGN, INC.
17670 N.W. 78th AVENUE, STE 214
MIAMI, FL 33015

PH. (305) 392-1016
E: ken@gsladesign.com

MEP ENGINEER:
--

STRUCTURAL ENGINEER:
--

NEW DEVELOPMENT FOR:

SOLESTE LA PIAZZA

HOLLYWOOD

1845 HOLLYWOOD BOULEVARD
HOLLYWOOD, FL 33020

REVISIONS:

FORMGROUP
architecture •planning

FORM GROUP, INC.
6740 SW 64 CT, MIAMI, FL 33143
TEL. 305.443.4244 FX. 305.443.3338
ARCHITECT OF RECORD:
OMAR MORALES, AIA
AA-0014851

THIS DRAWING, CONCEPTUAL DESIGN AND IDEAS ARE THE EXCLUSIVE PROPERTY OF FORM GROUP, INC. AND SHALL NOT BE USED IN WHOLE OR IN PART FOR ANY PURPOSE WITHOUT THE WRITTEN CONSENT OF FORM GROUP, INC.

PROJECT NO. 22-0301
TITLE: COVER
DATE: MARCH 1, 2022
SCALE: AS SHOWN
DRAWING NO.: A-0



B SOUTHEAST VIEW



A NORTHEAST AERIAL VIEW



D NORTHWEST VIEW



C SOUTHWEST AERIAL VIEW

Soleste
La Piazza

DEVELOPER:

The Estate Companies

ROBERT SURIS
6201 S.W. 70th STREET, STE #200
SOUTH MIAMI, FL 33143

PH. (305) 663-1002
E: rsuris@eigfl.com

CIVIL ENGINEER:

CRAVEN THOMPSON & ASSOC., INC.
3563 N.W. 53rd STREET
FORT LAUDERDALE, FL 33309

PH. (954) 739-6400
E: rcrawford@craventhompsom.com

LANDSCAPE ARCHITECT:

GSLA DESIGN, INC.
17670 N.W. 78th AVENUE, STE 214
MIAMI, FL 33015

PH. (305) 392-1016
E: ken@gsladesign.com

MEP ENGINEER:

--

STRUCTURAL ENGINEER:

--

NEW DEVELOPMENT FOR:

SOLESTE LA PIAZZA

HOLLYWOOD

1845 HOLLYWOOD BOULEVARD
HOLLYWOOD, FL 33020

REVISIONS:

FORMGROUP
architecture • planning

FORM GROUP, INC.
6740 SW 64 CT, MIAMI, FL 33143
TEL. 305.443.4244 FX. 305.443.3338
ARCHITECT OF RECORD:
OMAR MORALES, AIA
AA-0014851

THIS ARCHITECTURAL PROVISIONS AND SPECIFICATIONS ARE THE PROPERTY OF FORM GROUP, INC. AND SHALL NOT BE USED OR REPRODUCED IN WHOLE OR IN PART WITHOUT THE WRITTEN CONSENT OF THE ARCHITECT.

PROJECT NO.: 22-0301
TITLE: RENDERINGS
DATE: MARCH 1, 2022
SCALE: AS SHOWN
DRAWING NO.: A-01

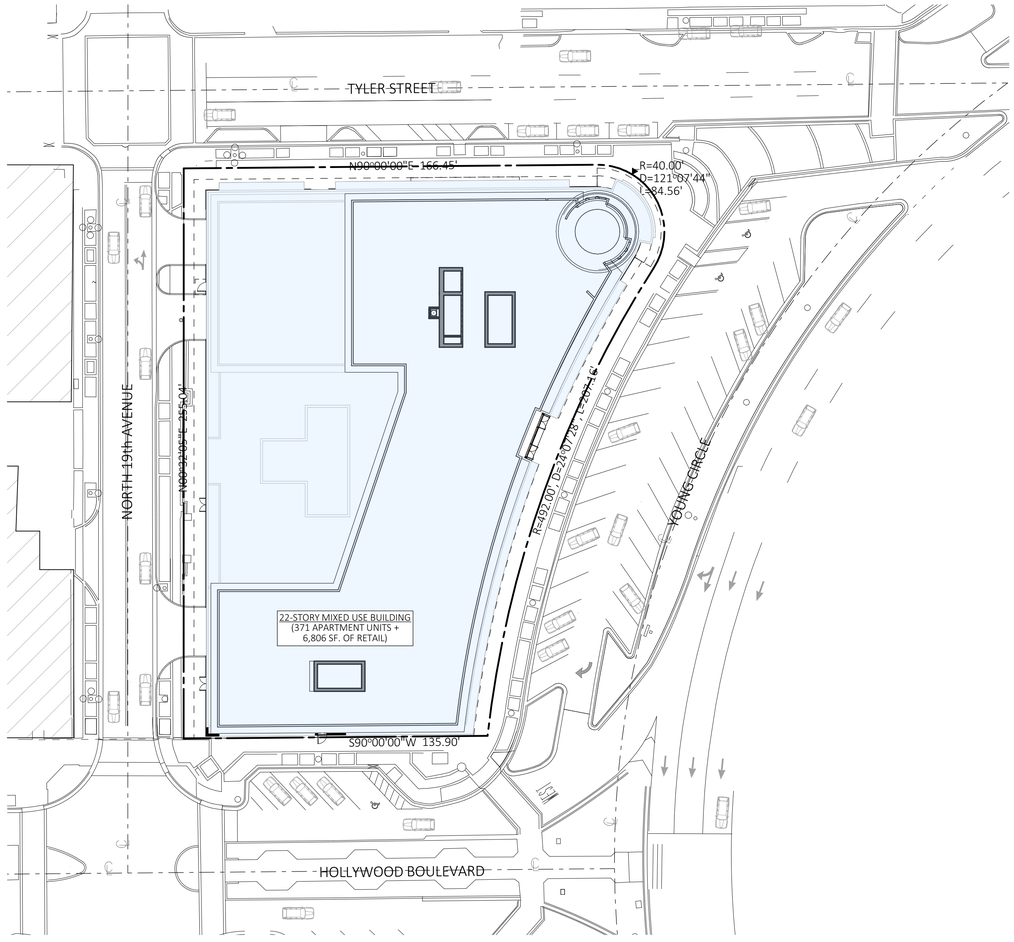

A SITE PLAN
SCALE: 1/32" = 1'-0"

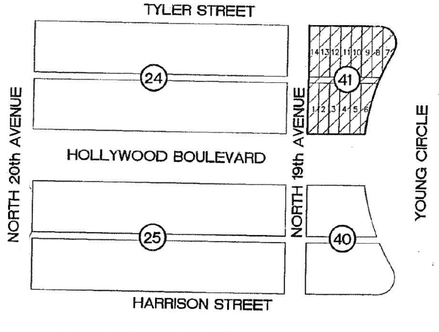

1 LOCATION MAP



2 ZONING MAP

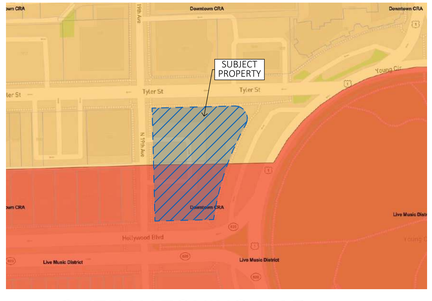

3 OVERAY ZONING MAP

UNIT BREAKDOWN				
UNIT TYPE	DESCRIPTION	AREA (sq.ft.)	QTY	TOTAL AREA (sq.ft)
STUDIO	STUDIO + 1 BATH	404	7	2,826
STUDIO	STUDIO + 1 BATH	405	7	2,837
STUDIO	STUDIO + 1 BATH	423	5	2,113
STUDIO	STUDIO + 1 BATH	426	5	2,128
STUDIO	STUDIO + 1 BATH	442	13	5,741
STUDIO	STUDIO + 1 BATH	446	8	3,572
STUDIO	STUDIO + 1 BATH	612	4	2,447
STUDIO	STUDIO + 1 BATH	614	4	2,454
1 BR	1 BEDROOM + 1 BATH	518	5	2,590
1 BR	1 BEDROOM + 1 BATH	539	7	3,775
1 BR	1 BEDROOM + 1 BATH	557	13	7,199
1 BR	1 BEDROOM + 1 BATH	557	12	6,687
1 BR	1 BEDROOM + 1 BATH	558	24	13,394
1 BR	1 BEDROOM + 1 BATH	567	8	4,539
1 BR	1 BEDROOM + 1 BATH	576	13	7,444
1 BR	1 BEDROOM + 1 BATH	609	13	7,920
1 BR	1 BEDROOM + 1 BATH	657	8	5,257
1 BR	1 BEDROOM + 1 BATH	693	7	4,851
1 BR	1 BEDROOM + 1 BATH	701	13	9,114
1 BR	1 BEDROOM + 1 BATH	708	4	2,833
1 BR	1 BEDROOM + 1 BATH	715	7	5,002
1 BR	1 BEDROOM + 1 BATH	730	7	5,113
1 BR	1 BEDROOM + 1 BATH	744	7	5,208
1 BR	1 BEDROOM + 1 BATH	744	5	3,720
1 BR	1 BEDROOM + 1 BATH	769	4	3,076
1 BR	1 BEDROOM + 1 BATH	770	1	770
1 BR	1 BEDROOM + 1 BATH	850	8	6,800
1 BR	1 BEDROOM + 1 BATH	888	12	10,661
1 BR	1 BEDROOM + 1 BATH	927	7	6,488
1 BR	1 BEDROOM + 1 BATH	993	4	3,973
1 BR	1 BEDROOM + 1 BATH	994	7	6,959
2 BR	2 BEDROOMS + 2 BATHS	871	13	11,329
2 BR	2 BEDROOMS + 2 BATHS	877	13	11,387
2 BR	2 BEDROOMS + 2 BATHS	970	12	11,609
2 BR	2 BEDROOMS + 2 BATHS	998	12	11,936
2 BR	2 BEDROOMS + 2 BATHS	1,027	13	13,314
2 BR	2 BEDROOMS + 2 BATHS	1,065	13	13,813
2 BR	2 BEDROOMS + 2 BATHS	1,075	12	12,861
2 BR	2 BEDROOMS + 2 BATHS	1,185	7	8,295
2 BR	2 BEDROOMS + 2 BATHS	1,316	7	9,211
2 BR	2 BEDROOMS + 2 BATHS	1,468	7	10,273
3 BR	3 BEDROOMS + 2 BATHS	1,605	13	20,858
			371	292,379 ft²

UNIT BREAKDOWN									
	STUDIO	1BR	1BR/DEN	2 BR	2BR/DEN	3-BR	SUB-TOTAL	LEVELS	TOTAL
GROUND FLOOR	0	0	0	0	0	0	0	1	0
2ND FLOOR	0	0	0	0	0	0	0	1	0
3RD-9TH	2	7	0	3	0	0	12	7	84
10TH FLOOR	3	7	0	4	0	1	15	1	15
11TH-14TH	5	13	0	7	0	1	26	4	104
15TH-22ND	2	11	0	7	0	1	21	8	168
	0	0	0	0	0	0	0	0	0
TOTAL	53 14%	196 53%	0 0%	109 29%	0 0%	13 4%		22	371

PARKING BREAKDOWN							
	ON-STREET	HC	SINGLE	TANDEM	SUB-TOTAL	LEVELS	TOTAL
GROUND FLOOR	42	2	15	12	71	1	71
2ND FLOOR	0	18	18	30	48	1	48
3RD-9TH FLOOR	0	1	40	10	51	7	357
TOTAL	42	9	313	112			476

FAR BREAKDOWN			
	AREA	LEVELS	TOTAL AREA
GROUND FLOOR	17,684 sq. ft.	1	17,684 sq. ft.
SECOND FLOOR	1,865 sq. ft.	1	1,865 sq. ft.
3RD-9TH	14,490 sq. ft.	7	101,430 sq. ft.
10TH FLOOR	23,146 sq. ft.	1	23,146 sq. ft.
11TH-14TH	24,906 sq. ft.	4	99,624 sq. ft.
15TH-22ND	20,550 sq. ft.	8	164,400 sq. ft.
		22	406,149 sq. ft.
FAR PERMITTED			520,790 sq. ft.

ZONING ANALYSIS

ZONING DISTRICT	GOVERNMENT USE DISTRICT (GU)	
FUTURE LAND USE	REGIONAL ACTIVITY CENTER (RAC)	
CORE	DOWNTOWN CORE OPPORTUNITY ZONE	
CORE DISTRICT	YOUNG CIRCLE DISTRICT	
ZONING CLASSIFICATION		
	REQUIRED / PERMITTED	PROPOSED
LOT AREA (NET)	-	44,124 sf. (1.01 ACRES)
LOT AREA (GROSS)	-	±94,689 sf. (2.17 ACRES)
LOT WIDTH	-	255'-0"
LOT DEPTH	-	214'-7" VARIES
FAR (BASED ON GROSS LOT AREA)	5.5 MAX (520,790 s.f.)	4.3 (±408,149 s.f.)
BUILDING HEIGHT	230'-0" MAX.	22-STORIES (228'-4")
DENSITY	-	371 UNITS
DWELLING UNIT SIZE	400 s.f. MIN.	405 s.f.
CUMULATE AVERAGE SIZE	650 s.f. MIN.	±788 s.f.
TOWER LENGTH	300'-0" MAX.	255'-6"
TOWER FLOOR PLATE	45,000 s.f. MAX.	24,906 s.f.
TOWER FLOOR PLATE (AVERAGE)	24,000 s.f. MAX.	±22,090 s.f.
RETAIL	-	6,919 s.f.
OFFICES	-	1,706 s.f.
SETBACKS		
YOUNG CIRCLE		
BASE (GROUND FLOOR TO 75'-0")	10'-0"	10'-0"
TOWER (ABOVE 75'-0" TO 135'-0")	10'-0"	13'-9"
TOWER (ABOVE 135'-0")	10'-0"	13'-9"
TYLER STREET		
BASE (GROUND FLOOR TO 75'-0")	10'-0"	10'-0"
TOWER (ABOVE 75'-0" TO 135'-0")	10'-0"	14'-5"
TOWER (ABOVE 135'-0")	10'-0"	14'-5"
HOLLYWOOD BOULEVARD		
BASE (GROUND FLOOR TO 75'-0")	MATCH ADJACENT OR 0'-0"	1'-1"
TOWER (ABOVE 75'-0" TO 135'-0")	MATCH GROUND FLOOR	4'-11"
TOWER (ABOVE 135'-0")	MATCH GROUND FLOOR	4'-11"
19th AVENUE		
BASE (GROUND FLOOR TO 75'-0")	NON-RESIDENTIAL: 10'-0" RESIDENTIAL: 15'-0"	10'-0"
TOWER (ABOVE 75'-0" TO 135'-0")		15'-0"
TOWER (ABOVE 135'-0")	130'-0" MAX OFFSET	SEE TYPICAL TOWER PLAN

PARKING REQUIREMENTS				
	AREA / UNITS	MINIMUM	MAXIMUM	PROPOSED
RETAIL, RESTAURANT OR COMMERCIAL	6,919 s.f.	EXEMPT		0 SPACES
OFFICES	1,706 s.f.	2.5 PER 1,000 s.f. (5 SPACES)	5 PER 1,000 s.f. (9 SPACES)	5 SPACES
MULTI-FAMILY RESIDENTIAL	249 UNITS (STUDIO & 1BD UNITS)	1 PER UNIT FOR 1-BD UNITS (249 SPACES)	2.5 PER UNIT FOR 1-BD UNITS (623 SPACES)	
	122 UNITS (2BD & 3BD UNITS)	1.5 PER UNIT FOR 1-BD UNITS (183 SPACES)	2.5 PER UNIT FOR 1-BD UNITS (305 SPACES)	
VISITORS (RESIDENTIAL)	371 UNITS	1 PER 10 UNITS (38 SPACES)	1 PER 5 UNITS (75 SPACES)	38 SPACES
TOTAL SINGLE SPACES	-	-	-	313 SPACES
TOTAL TANDEM SPACES (ASSIGNED TO 2BD & 3BD UNITS)	-	-	-	112 SPACES
ADA PARKING SPACES	-	9		9 SPACES
SUB-TOTAL		475 SPACES MIN.	1,012 SPACES MAX.	434 TOTAL SPACES
ON-STREET PARKING				+42 SPACES
TOTAL		475 SPACES MIN.	1,012 SPACES MAX.	476 TOTAL SPACES
SPACES DESIGNATED TO RETAIL	6,919 s.f.	EXEMPT		4 LOADING SPACES
MULTI-FAMILY RESIDENTIAL	371 UNITS	50-100 UNITS: 1 + 1 SPACE PER 100 UNITS (4 SPACES)		

SCOPE OF WORK:

PURSUANT TO FBC 2020, 7th ED. & NFPA 101, THE PROPOSED PROJECT IS DEFINED AS FOLLOWS.

NEW CONSTRUCTION

WORK PROPOSED: NEW 22-STORY MIXED-USE BUILDING
CONSTRUCTION TYPE: TYPE IA
CLASSIFICATION: MIXED OCCUPANCY (MERCANTILE & RESIDENTIAL - GROUP R-2)

GOVERNING CODES:

THIS PROJECT HAS BEEN DESIGNED AS IS HEREBY SUBMITTED FOR REVIEW BY THE CITY OF HOLLYWOOD BUILDING DEPARTMENT USING THE FOLLOWING CODE CRITERIA.

-FLORIDA BUILDING CODE - 2020 7th EDITION
-NFPA 101 - LIFE SAFETY CODE - 2018 EDITION.
-FEDERAL FAIR HOUSING ACT - 1998 EDITION
-FBC- ACCESSIBILITY - 2020 7th EDITION
-FLORIDA FIRE PREVENTION CODE - 2017 5th EDITION

LEGAL DESCRIPTION:

LOTS 1 THROUGH 14, BLOCK 41, HOLLYWOOD, ACCORDING TO THE MAP OR PLAT THEREOF, AS RECORDED IN MAP BOOK 1, PAGE 21, OF THE PUBLIC RECORDS OF BROWARD COUNTY, FLORIDA, TOGETHER WITH THE VACATED 13 FOOT ALLEY DESCRIBED IN OFFICIAL RECORDS BOOK 22466, PAGE 38, OF THE PUBLIC RECORDS OF BROWARD COUNTY, FLORIDA.

SAID LANDS SITUATE IN THE CITY OF HOLLYWOOD, BROWARD COUNTY, FLORIDA AND CONTAIN 44,124 SQUARE FEET (1.013 ACRES) MORE OR LESS.

Soleste
La Piazza

DEVELOPER:
The Estate Companies
ROBERT SURIS
6201 S.W. 70th STREET, STE #200
SOUTH MIAMI, FL 33143
PH. (305) 663-1002
E: rsuris@eigfl.com

CIVIL ENGINEER:
CRAVEN THOMPSON & ASSOC., INC.
3563 N.W. 53rd STREET
FORT LAUDERDALE, FL 33309
PH. (954) 739-6400
E: rcrawford@craventhompsom.com

LANDSCAPE ARCHITECT:
GSLA DESIGN, INC.
17670 N.W. 78th AVENUE, STE 214
MIAMI, FL 33015
PH. (305) 392-1016
E: ken@gsladesign.com

MEP ENGINEER:
--

STRUCTURAL ENGINEER:
--

NEW DEVELOPMENT FOR:
SOLESTE LA PIAZZA
HOLLYWOOD

1845 HOLLYWOOD BOULEVARD
HOLLYWOOD, FL 33020

REVISIONS:

FORMGROUP
architecture •planning
FORM GROUP, INC.
6740 SW 64 CT, MIAMI, FL 33143
TEL. 305.443.4244 FX. 305.443.3338
ARCHITECT OF RECORD:
OMAR MORALES, AIA
AA-0014851

THE ABOVE FORMS, PLANS(S), ETC. PERIOD ARE THE PROPERTY OF FORM GROUP INC. AS CONSTRUCTED IN THEM ARE NOT TO BE USED IN WHOLE OR IN PART FOR ANY PURPOSE WHATSOEVER WITHOUT THE WRITTEN CONSENT OF THE ARCHITECT.

PROJECT NO.: 22-0301
TITLE: SITE PLAN & DATA
DATE: MARCH 1, 2022
SCALE: AS SHOWN
DRAWING NO.: A-100

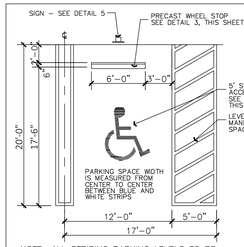

NOTE: ALL STRIPING PARKING LEVELS TO BE THERMO-PLASTIC REFLECTORIZED (BEADED)-WHITE PAINTED FINISH ON STALLS & WALKS- BLUE PAINTED FINISH AT UNIVERSAL (ACCESSIBLE) PARKING STALL.

2 H.C. PARKING SPACE
NOT TO SCALE

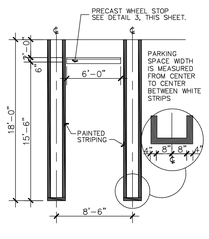

NOTE: ALL STRIPING PARKING LEVELS TO BE THERMO-PLASTIC REFLECTORIZED (BEADED)-WHITE PAINTED FINISH ON STALLS & WALKS- BLUE PAINTED FINISH AT UNIVERSAL (ACCESSIBLE) PARKING STALL.

1 TYP. PARKING SPACE
NOT TO SCALE

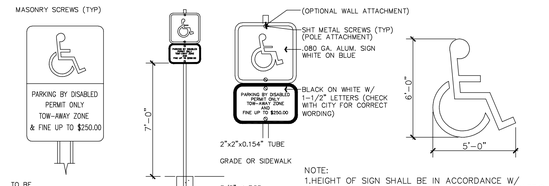

NOTE:
1.HEIGHT OF SIGN SHALL BE IN ACCORDANCE W/ SECTION 24-23 OF THE MANUAL OF UNIFORM TRAFFIC CONTROL DEVICES (M.U.T.C.D.)
2. TYPE AND GAUGE OF MATERIAL FOR SIGN AND POST SHALL BE EQUAL TO COUNTRY SIGN REQUIREMENT.
3. ONE (1) SIGN REQUIRED PER ACCESSIBLE PARKING SPACE.

3 ACCESSIBLE SIGNAGE
NOT TO SCALE

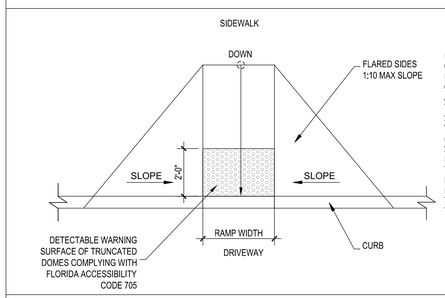

DETECTABLE WARNINGS: CURB RAMPS SHALL HAVE A DETECTABLE WARNING COMPLYING WITH FLORIDA ACCESSIBILITY CODE 705. THE DETECTABLE WARNING SHALL EXTEND THE FULL WIDTH OF THE CURB RAMP (EXCLUSIVE OF FLARED SIDES) AND SHALL EXTEND EITHER THE FULL DEPTH OF THE CURB RAMP OR 24 INCHES DEEP MINIMUM MEASURED FROM THE BACK OF THE CURB ON THE RAMP SURFACE.

4 CORNER GUARD DETAILS
SCALE: 3/8" = 1'-0"

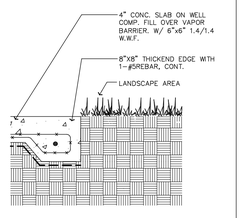

6 LANDSCAPE EDGE DETAIL
NOT TO SCALE

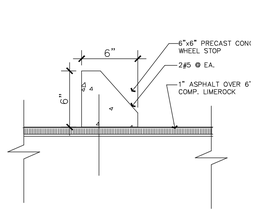

5 WHEEL STOP DETAIL
NOT TO SCALE

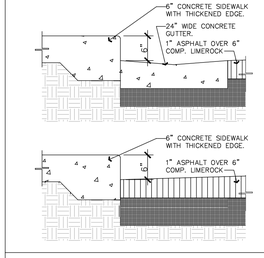

7 CURB EDGE DETAILS
NOT TO SCALE

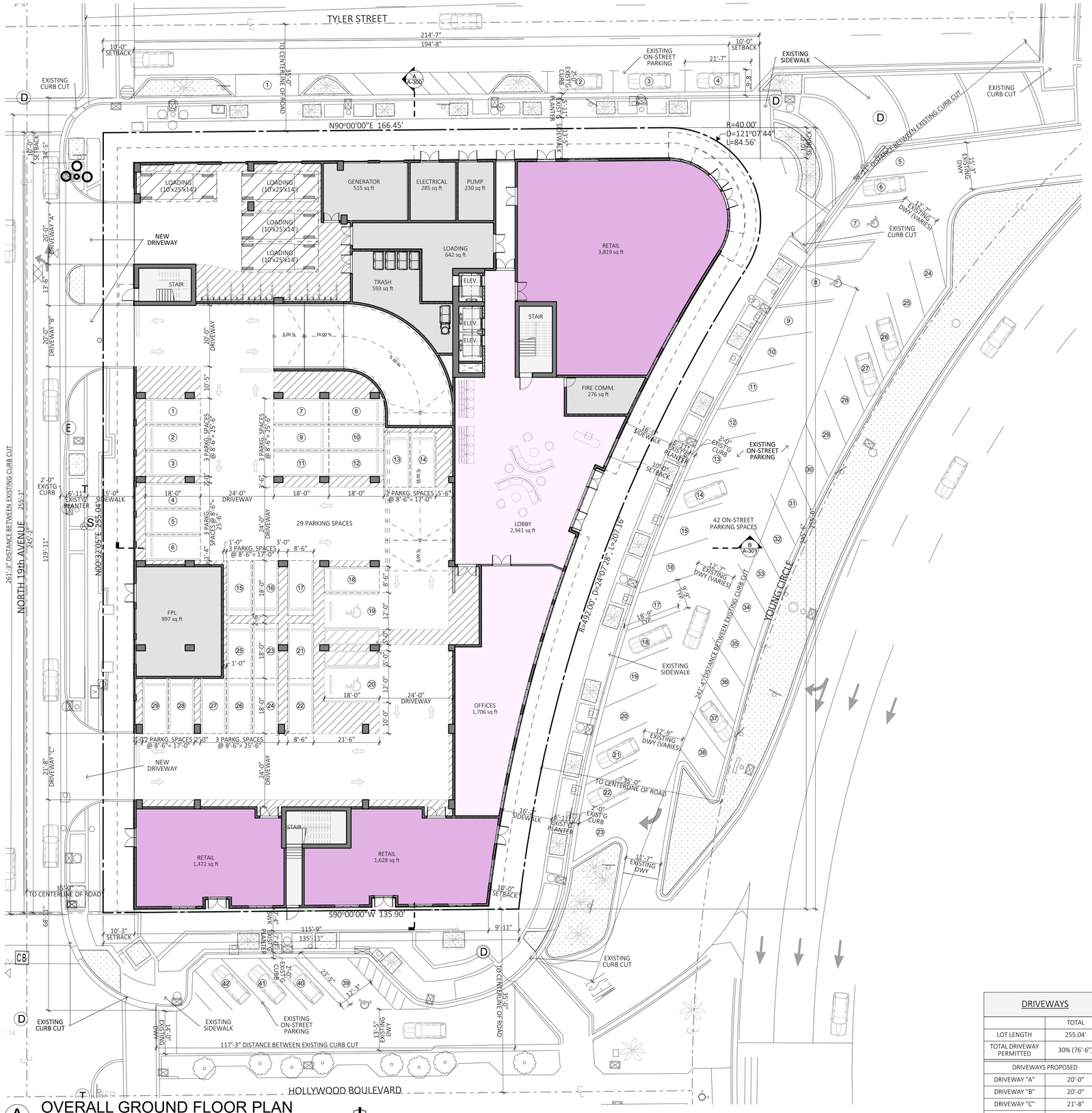

A OVERALL GROUND FLOOR PLAN
SCALE: 1/16" = 1'-0"

DRIVEWAYS	
	TOTAL
LOT LENGTH	255.04'
TOTAL DRIVEWAY PERMITTED	30% (76'-6")
DRIVEWAYS PROPOSED	
DRIVEWAY "A"	20'-0"
DRIVEWAY "B"	20'-0"
DRIVEWAY "C"	21'-8"
TOTAL DRIVEWAY LENGTH	61'-8" (24%)

Soleste La Piazza

DEVELOPER:
The Estate Companies
ROBERT SURIS
6201 S.W. 70th STREET, STE #200
SOUTH MIAMI, FL 33143
PH. (305) 663-1002
E: rsuris@eigfl.com

CIVIL ENGINEER:
CRAVEN THOMPSON & ASSOC., INC.
3563 N.W. 53rd STREET
FORT LAUDERDALE, FL 33309
PH. (954) 739-6400
E: rcrawford@craventhompsom.com

LANDSCAPE ARCHITECT:
GSLA DESIGN, INC.
17670 N.W. 78th AVENUE, STE 214
MIAMI, FL 33015
PH. (305) 392-1016
E: ken@gsladesign.com

MEP ENGINEER:
--

STRUCTURAL ENGINEER:
--

NEW DEVELOPMENT FOR:
SOLESTE LA PIAZZA
HOLLYWOOD
1845 HOLLYWOOD BOULEVARD
HOLLYWOOD, FL 33020

REVISIONS:

FORMGROUP architecture • planning

FORM GROUP, INC.
6740 SW 64 CT, MIAMI, FL 33143
TEL. 305.443.4244 FX. 305.443.3338
ARCHITECT OF RECORD:
OMAR MORALES, AIA
AA-0014851

THE IDEAS, CONCEPTS, DESIGNS AND DRAWINGS AND THE ARRANGEMENT THEREOF AS SHOWN ON THESE PLANS SHALL BE CONSIDERED AS THE PROPERTY OF FORM GROUP INC. AND SHALL NOT BE USED IN WHOLE OR IN PART WITHOUT THE WRITTEN CONSENT OF THE ARCHITECT.

PROJECT NO. 22-0301
TITLE: OVERALL GROUND FLOOR PLAN
DATE: MARCH 1, 2022
SCALE: AS SHOWN
DRAWING NO.: A-101

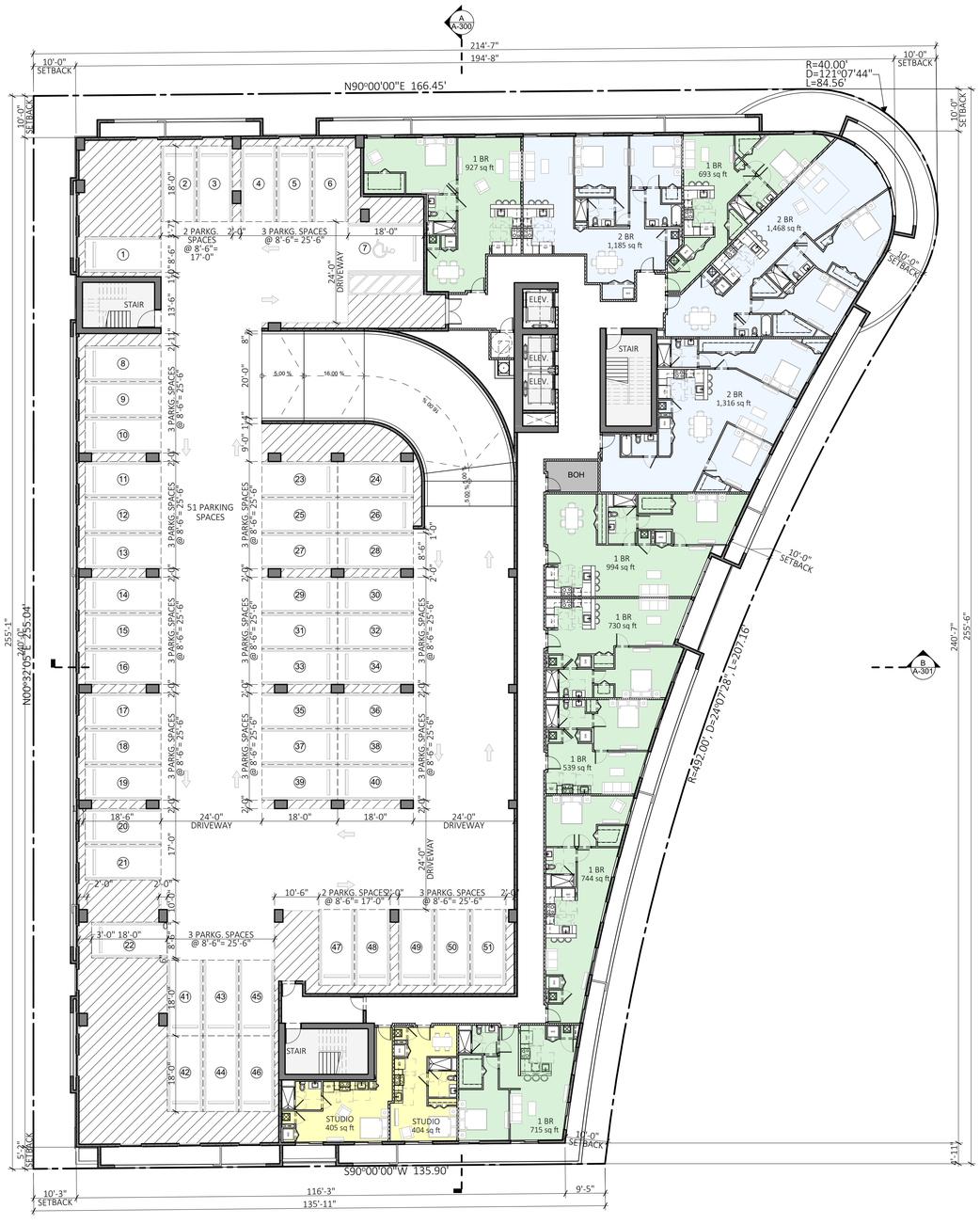

C TYPICAL GARAGE FLOOR PLAN (LEVELS 3-9)
SCALE: 1/16" = 1'-0"

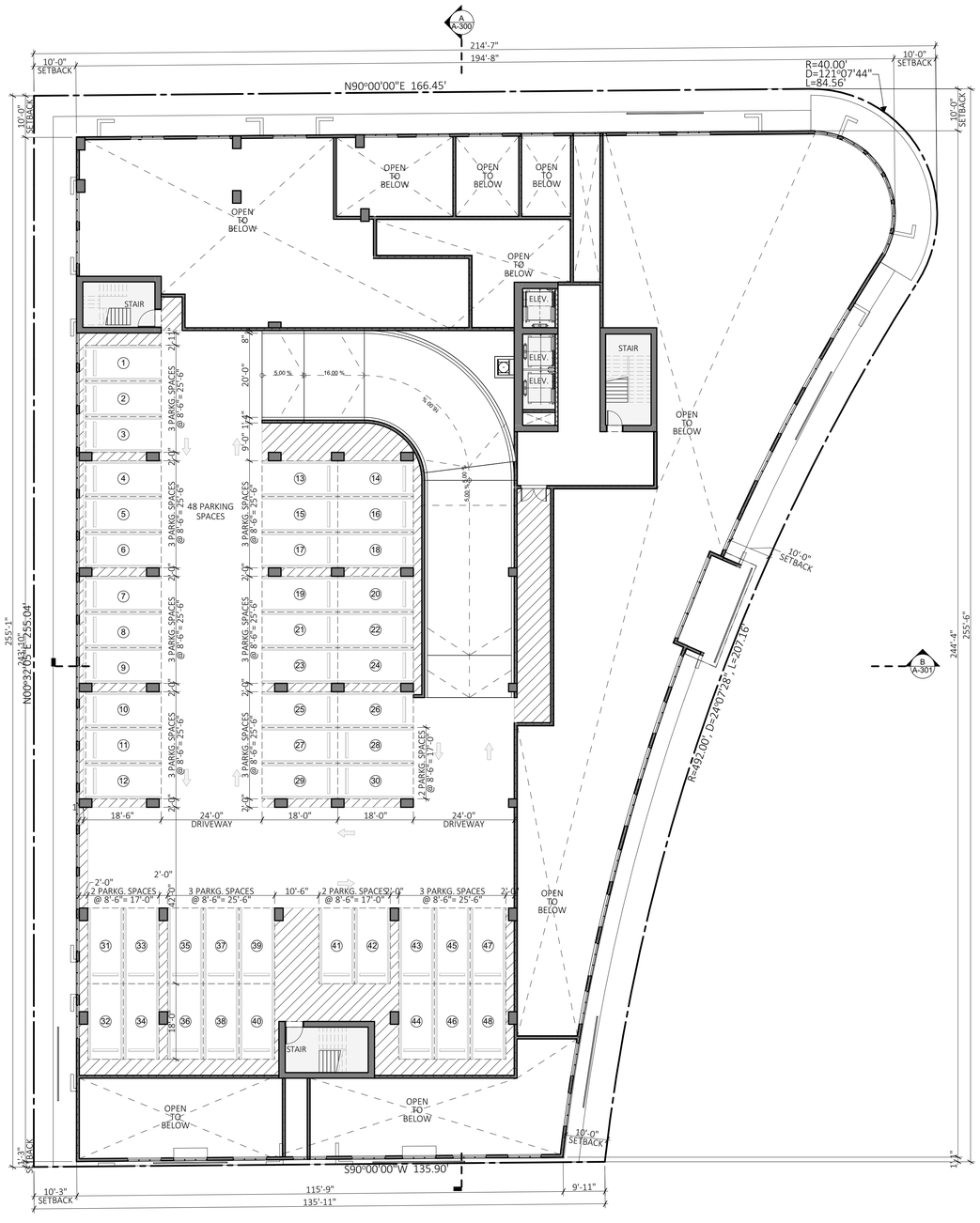

B SECOND FLOOR PLAN
SCALE: 1/16" = 1'-0"

Soleste
La Piazza

DEVELOPER:
The Estate Companies
ROBERT SURIS
6201 S.W. 70th STREET, STE #200
SOUTH MIAMI, FL 33143
PH. (305) 663-1002
E: rsuris@eigfl.com

CIVIL ENGINEER:
CRAVEN THOMPSON & ASSOC., INC.
3563 N.W. 53rd STREET
FORT LAUDERDALE, FL 33309
PH. (954) 739-6400
E: rcrawford@craventhompsom.com

LANDSCAPE ARCHITECT:
GSLA DESIGN, INC.
17670 N.W. 78th AVENUE, STE 214
MIAMI, FL 33015
PH. (305) 392-1016
E: ken@gsladesign.com

MEP ENGINEER:
--

STRUCTURAL ENGINEER:
--

NEW DEVELOPMENT FOR:
SOLESTE LA PIAZZA
HOLLYWOOD
1845 HOLLYWOOD BOULEVARD
HOLLYWOOD, FL 33020

REVISIONS:

FORMGROUP
architecture •planning

FORM GROUP, INC.
6740 SW 64 CT, MIAMI, FL 33143
TEL. 305.443.4244 FX. 305.443.3338
ARCHITECT OF RECORD:
OMAR MORALES, AIA
AA-0014851

THE IDEAS, PLANS, PRESENTS, AND DESIGN ARE THE PROPERTY OF FORM GROUP INC. AS SUCH, NOTHING MAY BE COPIED, REPRODUCED, OR USED IN ANY WAY WITHOUT THE WRITTEN CONSENT OF THE ARCHITECT.

PROJECT NO. 22-0301
TITLE: TYPICAL FLOOR PLANS (LEVELS 2-9)
DATE: MARCH 1, 2022
SCALE: AS SHOWN
DRAWING NO.: A-102



E TYPICAL APARTMENT FLOOR PLAN (LEVELS 11-14)

SCALE: 1/16" = 1'-0"

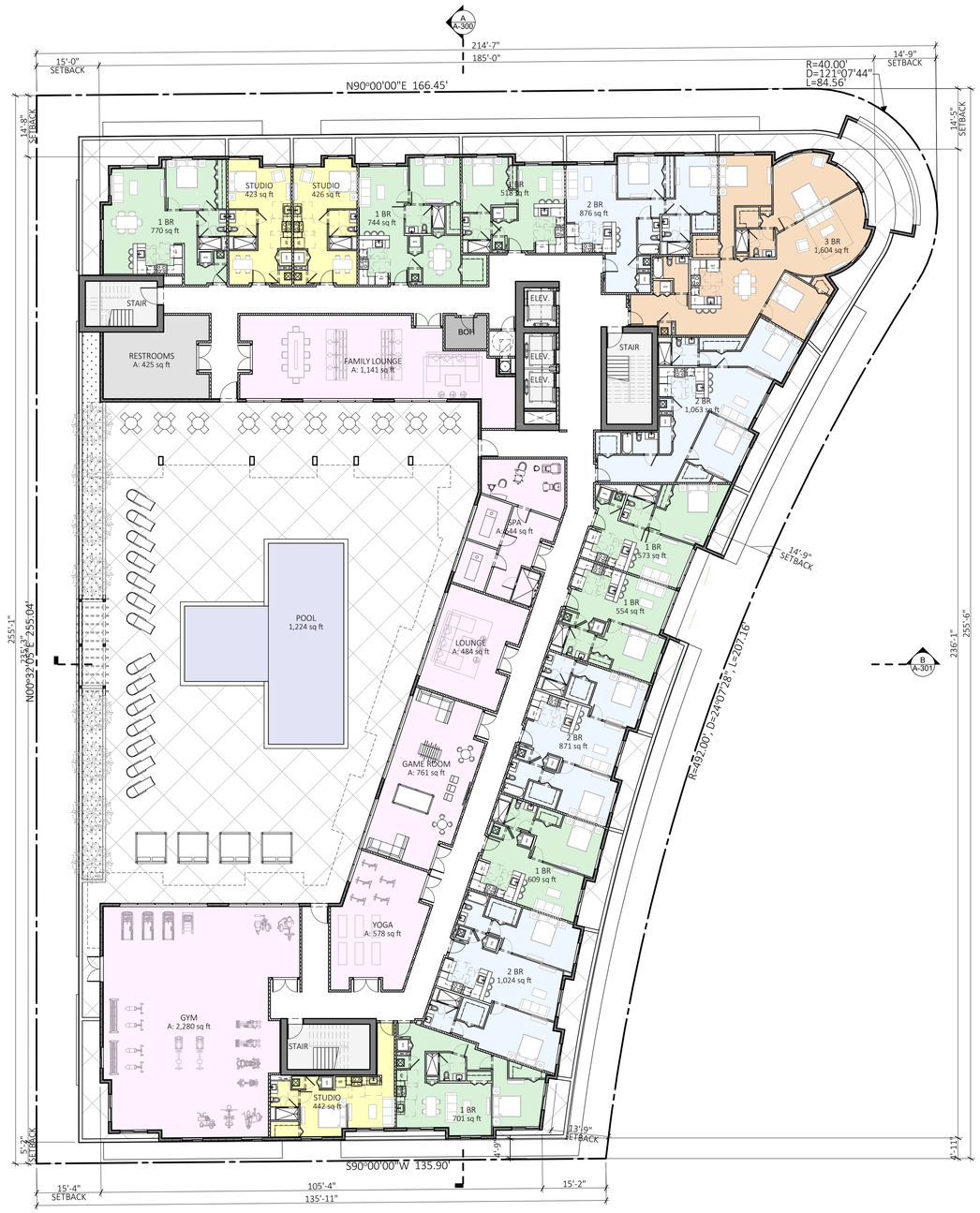

D 10TH FLOOR PLAN (REC DECK)

SCALE: 1/16" = 1'-0"

Soleste
La Piazza

DEVELOPER:
The Estate Companies
ROBERT SURIS
6201 S.W. 70th STREET, STE #200
SOUTH MIAMI, FL 33143
PH. (305) 663-1002
E: rsuris@eigfl.com

CIVIL ENGINEER:
CRAVEN THOMPSON & ASSOC., INC.
3363 N.W. 53rd STREET
FORT LAUDERDALE, FL 33309
PH. (954) 739-6400
E: rcrawford@craventhompsom.com

LANDSCAPE ARCHITECT:
GSLA DESIGN, INC.
17670 N.W. 78th AVENUE, STE 214
MIAMI, FL 33015
PH. (305) 392-1016
E: ken@gsladesign.com

MEP ENGINEER:
--

STRUCTURAL ENGINEER:
--

NEW DEVELOPMENT FOR:
SOLESTE LA PIAZZA
HOLLYWOOD

1845 HOLLYWOOD BOULEVARD
HOLLYWOOD, FL 33020

REVISIONS:

FORMGROUP
architecture •planning
FORM GROUP, INC.
6740 SW 64 CT, MIAMI, FL 33143
TEL. 305.443.4244 FX. 305.443.3338
ARCHITECT OF RECORD:
OMAR MORALES, AIA
AA:0014851

THIS SHEET, FORMS, TECHNICAL AND DESIGN ARE THE PROPERTY OF FORM GROUP, INC. AND SHALL NOT BE USED IN WHOLE OR IN PART WITHOUT THE WRITTEN CONSENT OF FORM GROUP, INC.

PROJECT NO. 22-0301
TITLE: TYPICAL FLOOR PLANS (LEVELS 10-14)
DATE: MARCH 1, 2022
SCALE: AS SHOWN
DRAWING NO.: A-103

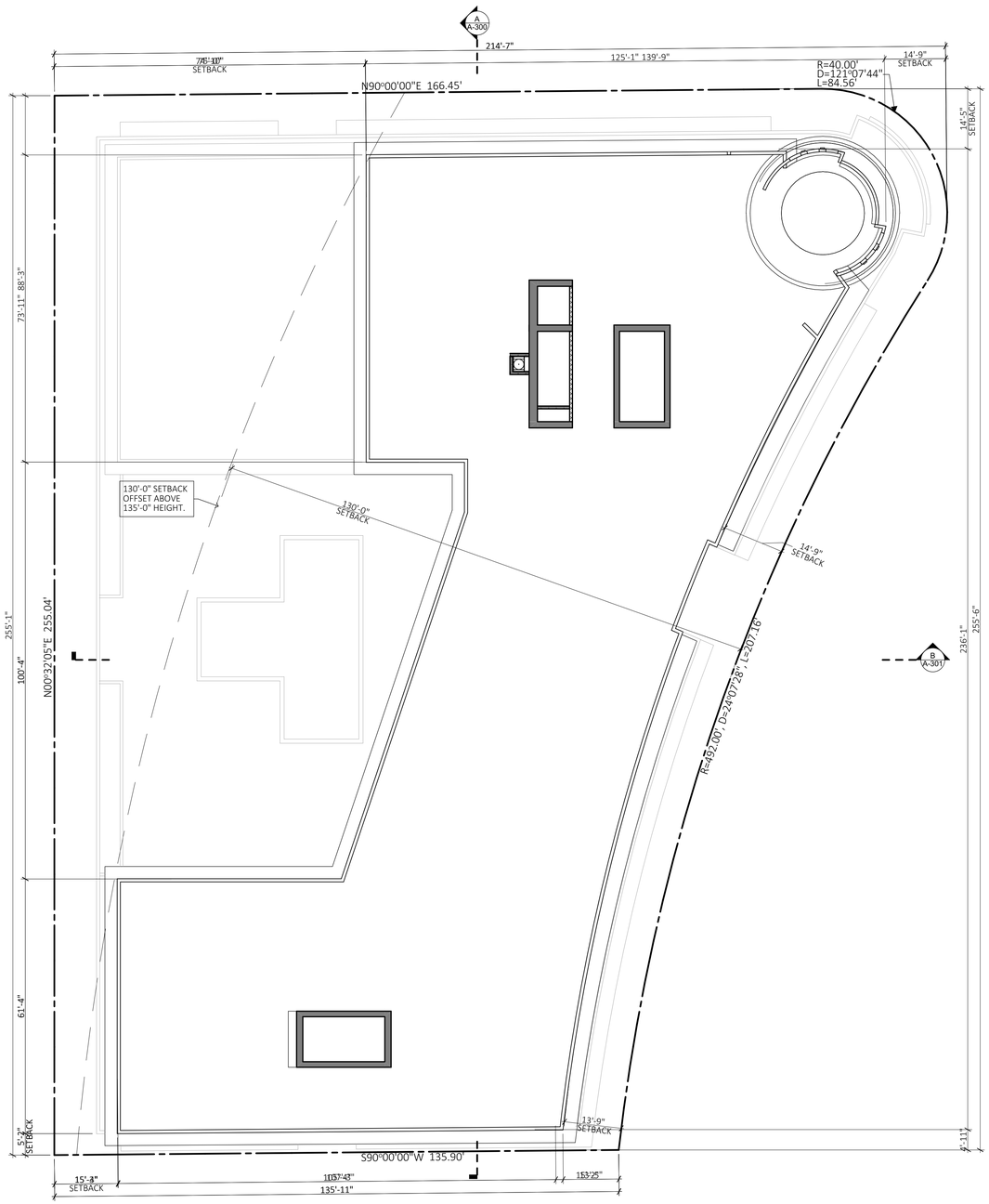

F ROOF PLAN
SCALE: 1/16" = 1'-0"



F TYPICAL APARTMENT FLOOR PLAN (LEVELS 15-22)
SCALE: 1/16" = 1'-0"

Soleste
La Piazza

DEVELOPER:
The Estate Companies

ROBERT SURIS
6201 S.W. 70th STREET, STE #200
SOUTH MIAMI, FL 33143

PH. (305) 663-1002
E: rsuris@eigfl.com

CIVIL ENGINEER:
CRAVEN THOMPSON & ASSOC., INC.
3563 N.W. 53rd STREET
FORT LAUDERDALE, FL 33309

PH. (954) 739-6400
E: rcrawford@craventhompsom.com

LANDSCAPE ARCHITECT:
GSLA DESIGN, INC.
17670 N.W. 78th AVENUE, STE 214
MIAMI, FL 33015

PH. (305) 392-1016
E: ken@gsladesign.com

MEP ENGINEER:
--

STRUCTURAL ENGINEER:
--

NEW DEVELOPMENT FOR:

SOLESTE LA PIAZZA

HOLLYWOOD

1845 HOLLYWOOD BOULEVARD
HOLLYWOOD, FL 33020

REVISIONS:

FORMGROUP
architecture •planning

FORM GROUP, INC.
6740 SW 64 CT, MIAMI, FL 33143
TEL. 305.443.4244 FX. 305.443.3338
ARCHITECT OF RECORD:
OMAR MORALES, AIA
AA-0014851

THIS DRAWING PROPERLY DOCUMENTS AND DESIGNS ARE THE PROPERTY OF FORM GROUP, INC. AND ARE NOT TO BE USED OR SHALL BE COPIED, REPRODUCED OR USED IN WHOLE OR IN PART WITHOUT THE WRITTEN CONSENT OF THE ARCHITECT.

PROJECT NO.: 22-0301
TITLE: TYPICAL FLOOR PLANS (LEVELS 15-22) & ROOF PLAN
DATE: MARCH 1, 2022
SCALE: AS SHOWN
DRAWING NO.: A-104

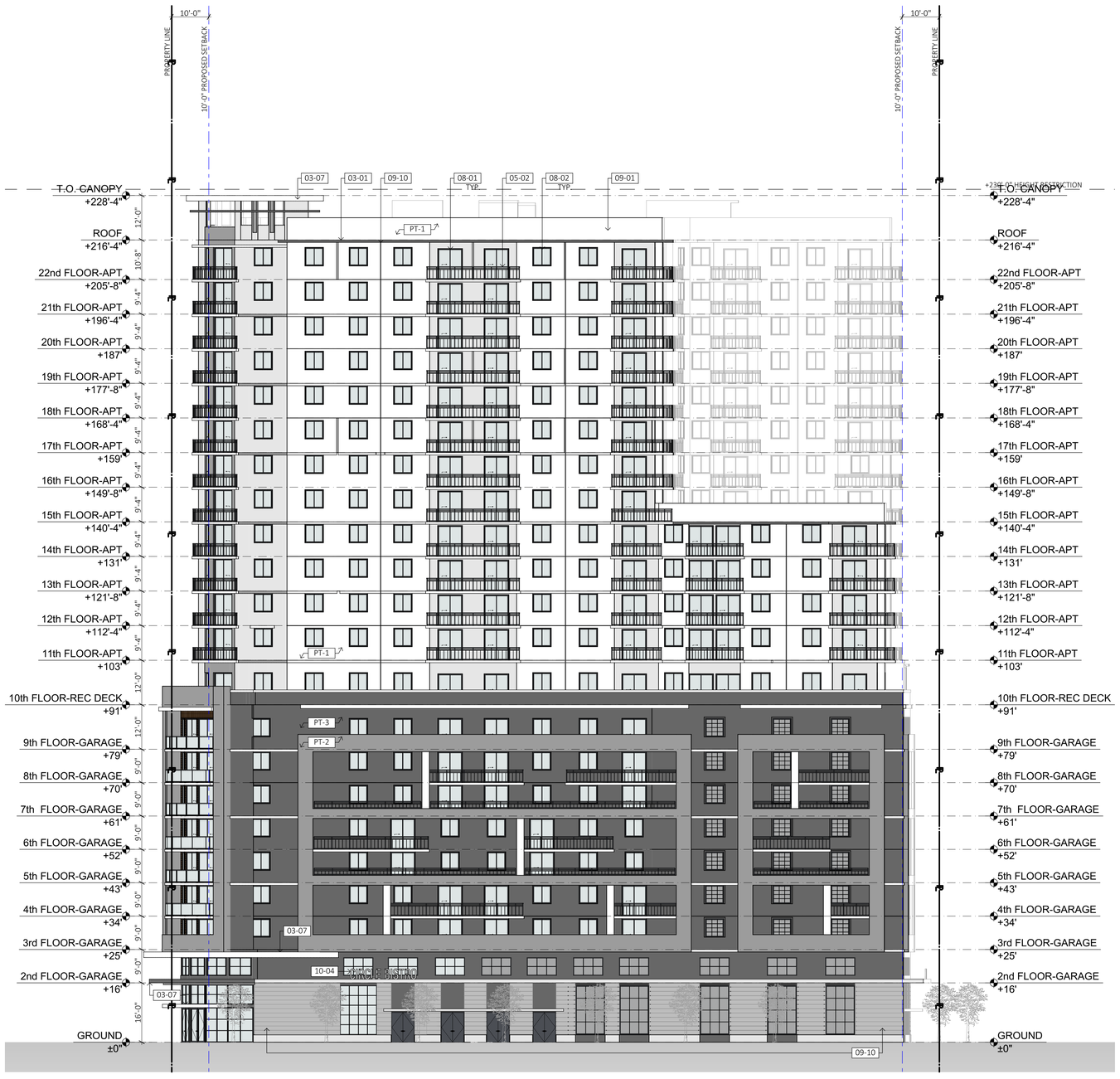

A NORTH ELEVATION

PAINT SCHEDULE

DESIGN ID		DESCRIPTION
PT-1		"BENJAMIN MOORE" CHANTILLY LACE 2121-70
PT-2		"BENJAMIN MOORE" PEWTER 2121-30
PT-3		"BENJAMIN MOORE" CITY SHADOW CSP-60
PT-4		PRODEMA WOOD SIDING.

NOTES

1. GROUND FLOOR WINDOW SILLS SHALL BE PLACED AT MAXIMUM HEIGHT OF TWENTY-FOUR (24) INCHES ABOVE GRADE TYP.

3. PROPOSED BALCONY RAILING BASIS OF DESIGN IS AN ALUMINUM PICKET RAILING WITH HORIZONTAL TOP SECTION COMPLIANT WITH THE HIGH-VELOCITY HURRICANE ZONE OF THE FLORIDA BUILDING CODE. ALUMINUM FRAMING ELEMENTS SHALL HAVE A SILVER POWDER COAT FINISH.

4. NO MIRROR-TYPE GLASS IS PROPOSED & COMPLY WITH SECTION 24-58(5)(1)j.iii.

MATERIAL LEGEND

* NOT ALL NOTES APPLICABLE TO THIS SHEET.

DIVISION 03 CONCRETE

- 03-01 CONCRETE SLAB. SEE STRUCT DWGS.
- 03-05 CONCRETE COLUMN. SEE STRUCT. DWGS.
- 03-06 CONCRETE BEAM/HEADER. SEE STRUCT DWGS.
- 03-07 CONCRETE EYEBROW/CANOPY. SEE STRUCT. DWGS.

DIVISION 05 METALS

- 05-02 METAL RAILING. 42" MIN. HEIGHT.
- 05-03 METAL/GLASS RAILING. 48" MIN. HEIGHT.
- 05-05 METAL TRELLIS FRAMING. SEE STRUCT. DWGS.
- 05-10 METAL PRIVACY SCREEN.
- 05-11 EXHAUST VENT. SEE SHEET A-500 FOR DETAIL.

DIVISION 08 DOORS & WINDOWS.

- 08-01 DOOR AS SCHEDULED.
- 08-02 WINDOW AS SCHEDULED.
- 08-03 STOREFRONT DOOR AS SCHEDULED.
- 08-04 STOREFRONT AS SCHEDULED.
- 08-05 METAL GRILLES AS SCHEDULED.

DIVISION 09 FINISHES.

- 09-01 SMOOTH STUCCO FINISH (PAINTED).
- 09-09 2" DIA. WEEP HOLE WALL DRAINS W/ 2% SLOPE.
- 09-10 3/4" STUCCO REVEAL PATTERN.
- 09-11 THICKENED STUCCO PANELS.

DIVISION 10 SPECIALTIES.

- 10-02 METAL LOUVER BY SPECIALTY ENG.
- 10-03 PUBLIC ART PIECE BY OTHER.
- 10-04 SIGNAGE BY OTHER.

Soleste La Piazza

DEVELOPER:
The Estate Companies
ROBERT SURIS
6201 S.W. 70th STREET, STE #200
SOUTH MIAMI, FL 33143
PH. (305) 663-1002
E: rsuris@eigfl.com

CIVIL ENGINEER:
CRAVEN THOMPSON & ASSOC., INC.
3563 N.W. 53rd STREET
FORT LAUDERDALE, FL 33309
PH. (954) 739-6400
E: rcrawford@craventhompsom.com

LANDSCAPE ARCHITECT:
GSLA DESIGN, INC.
17670 N.W. 78th AVENUE, STE 214
MIAMI, FL 33015
PH. (305) 392-1016
E: ken@gsladesign.com

MEP ENGINEER:
--

STRUCTURAL ENGINEER:
--

NEW DEVELOPMENT FOR:
SOLESTE LA PIAZZA
HOLLYWOOD

1845 HOLLYWOOD BOULEVARD
HOLLYWOOD, FL 33020

REVISIONS:

FORMGROUP
architecture •planning
FORM GROUP, INC.
6740 SW 64 CT, MIAMI, FL 33143
TEL. 305.443.4244 FX. 305.443.3338
ARCHITECT OF RECORD:
OMAR MORALES, AIA
AA-0014851

THIS DRAWING, PLANNING, DESIGNS & IDEAS ARE THE PROPERTY OF FORM GROUP, INC. AND ARE NOT TO BE USED IN WHOLE OR IN PART WITHOUT THE WRITTEN CONSENT OF THE ARCHITECTS.

PROJECT NO. 22-0301
TITLE: NORTH ELEVATION
DATE: MARCH 1, 2022
SCALE: AS SHOWN
DRAWING NO.: A-200

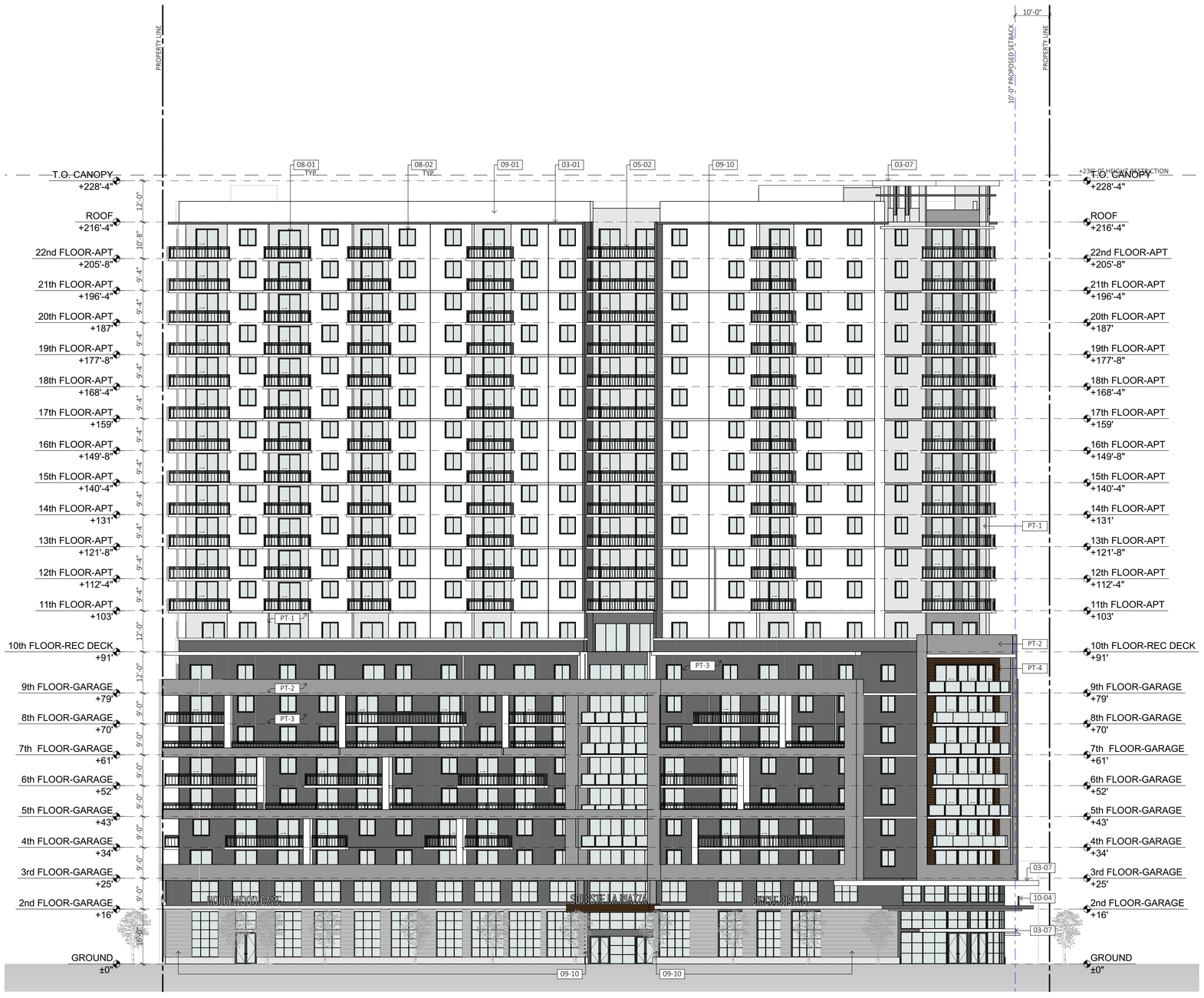

B EAST ELEVATION
SCALE: 1/16" = 1'-0"

PAINT SCHEDULE

DESIGN ID		DESCRIPTION
PT-1		"BENJAMIN MOORE" CHANTILLY LACE 2121-70
PT-2		"BENJAMIN MOORE" PEWTER 2121-30
PT-3		"BENJAMIN MOORE" CITY SHADOW CSP-60
PT-4		PRODEMA WOOD SIDING.

NOTES

1. GROUND FLOOR WINDOW SILLS SHALL BE PLACED AT MAXIMUM HEIGHT OF TWENTY-FOUR (24) INCHES ABOVE GRADE TYP.

3. PROPOSED BALCONY RAILING BASIS OF DESIGN IS AN ALUMINUM PICKET RAILING WITH HORIZONTAL TOP SECTION COMPLIANT WITH THE HIGH-VELOCITY HURRICANE ZONE OF THE FLORIDA BUILDING CODE. ALUMINUM FRAMING ELEMENTS SHALL HAVE A SILVER POWDER COAT FINISH.

4. NO MIRROR-TYPE GLASS IS PROPOSED & COMPLY WITH SECTION 24-58(5)(1)j.iii.

MATERIAL LEGEND

* NOT ALL NOTES APPLICABLE TO THIS SHEET.

DIVISION 03 CONCRETE

03-01	CONCRETE SLAB. SEE STRUCT DWGS.
03-05	CONCRETE COLUMN. SEE STRUCT. DWGS.
03-06	CONCRETE BEAM/HEADER. SEE STRUCT DWGS.
03-07	CONCRETE EYEBROW/CANOPY. SEE STRUCT. DWGS.

DIVISION 05 METALS

05-02	METAL RAILING. 42" MIN. HEIGHT.
05-03	METAL/GLASS RAILING. 48" MIN. HEIGHT.
05-05	METAL TRELLIS FRAMING. SEE STRUCT. DWGS.
05-10	METAL PRIVACY SCREEN.
05-11	EXHAUST VENT. SEE SHEET A-500 FOR DETAIL.

DIVISION 08 DOORS & WINDOWS.

08-01	DOOR AS SCHEDULED.
08-02	WINDOW AS SCHEDULED.
08-03	STOREFRONT DOOR AS SCHEDULED.
08-04	STOREFRONT AS SCHEDULED.
08-05	METAL GRILLES AS SCHEDULED.

DIVISION 09 FINISHES.

09-01	SMOOTH STUCCO FINISH (PAINTED).
09-09	2" DIA. WEEP HOLE WALL DRAINS W/ 2% SLOPE.
09-10	3/4" STUCCO REVEAL PATTERN.
09-11	THICKENED STUCCO PANELS.

DIVISION 10 SPECIALTIES.

10-02	METAL LOUVER BY SPECIALTY ENG.
10-03	PUBLIC ART PIECE BY OTHER.
10-04	SIGNAGE BY OTHER.

Soleste La Piazza

DEVELOPER:
The Estate Companies

ROBERT SURIS
6201 S.W. 70th STREET, STE #200
SOUTH MIAMI, FL 33143

PH. (305) 663-1002
E: rsuris@eigfl.com

CIVIL ENGINEER:
CRAVEN THOMPSON & ASSOC., INC.
3563 N.W. 53rd STREET
FORT LAUDERDALE, FL 33309

PH. (954) 739-6400
E: rcrawford@craventhompsom.com

LANDSCAPE ARCHITECT:
GSLA DESIGN, INC.
17670 N.W. 78th AVENUE, STE 214
MIAMI, FL 33015

PH. (305) 392-1016
E: ken@gsladesign.com

MEP ENGINEER:
--

STRUCTURAL ENGINEER:
--

NEW DEVELOPMENT FOR:
SOLESTE LA PIAZZA
HOLLYWOOD

1845 HOLLYWOOD BOULEVARD
HOLLYWOOD, FL 33020

REVISIONS:

FORMGROUP
architecture • planning

FORM GROUP, INC.
6740 SW 64 CT, MIAMI, FL 33143
TEL. 305.443.4244 FX. 305.443.3338
ARCHITECT OF RECORD:
OMAR MORALES, AIA
AA-0014851

THIS DRAWING, PLANNING, DESIGNS & IDEAS ARE THE PROPERTY OF FORM GROUP, INC. AND ARE NOT TO BE USED IN WHOLE OR IN PART WITHOUT THE WRITTEN PERMISSION OF THE FORM GROUP, INC. COPYRIGHTS

PROJECT NO. 22-0301
TITLE: EAST ELEVATION
DATE: MARCH 1, 2022
SCALE: AS SHOWN
DRAWING NO.: A-201

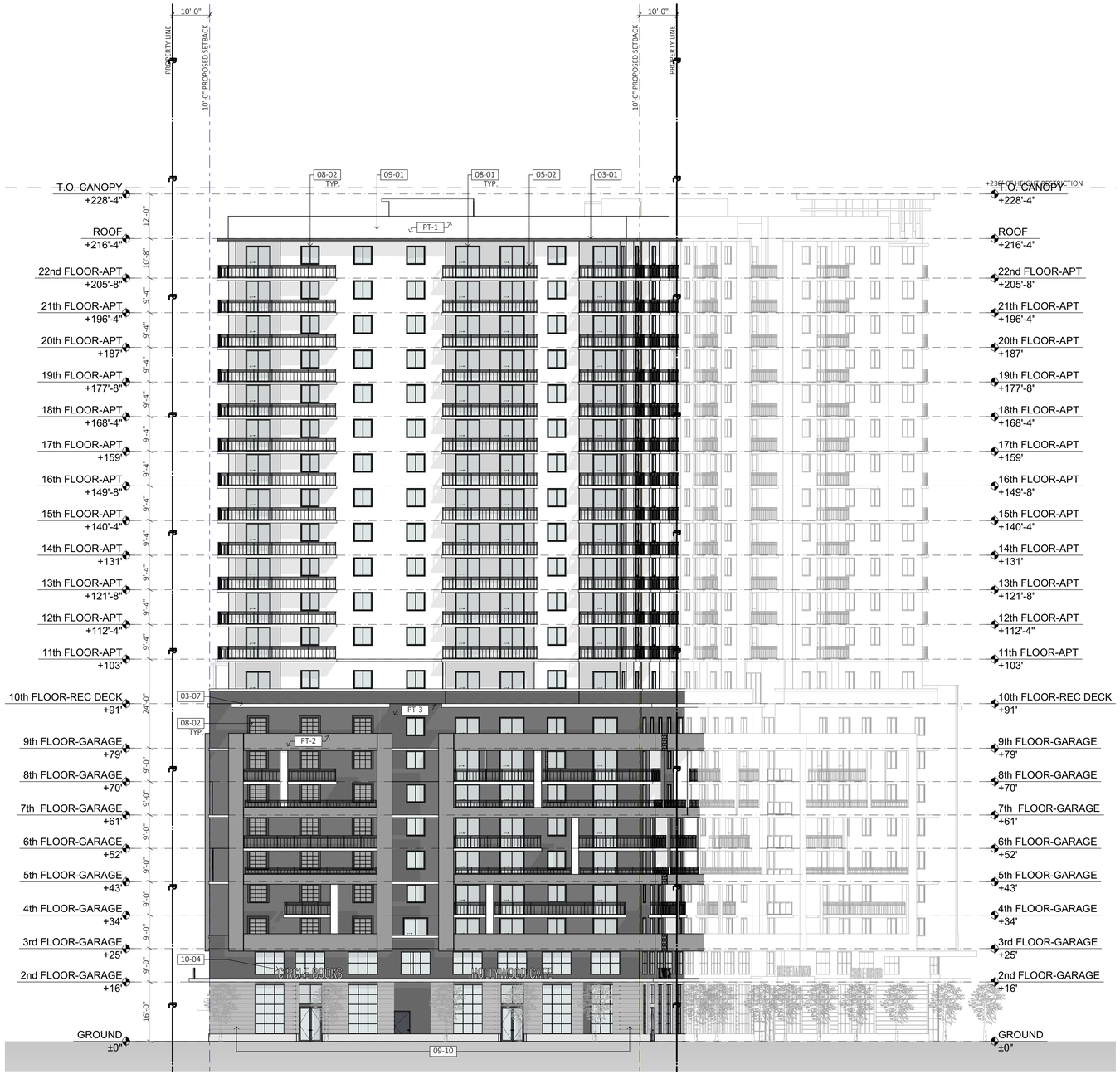

C SOUTH ELEVATION
SCALE: 1/16" = 1'-0"

PAINT SCHEDULE

DESIGN ID		DESCRIPTION
PT-1		"BENJAMIN MOORE" CHANTILLY LACE 2121-70
PT-2		"BENJAMIN MOORE" PEWTER 2121-30
PT-3		"BENJAMIN MOORE" CITY SHADOW CSP-60
PT-4		PRODEMA WOOD SIDING.

NOTES

1. GROUND FLOOR WINDOW SILLS SHALL BE PLACED AT MAXIMUM HEIGHT OF TWENTY-FOUR (24) INCHES ABOVE GRADE TYP.

3. PROPOSED BALCONY RAILING BASIS OF DESIGN IS AN ALUMINUM PICKET RAILING WITH HORIZONTAL TOP SECTION COMPLIANT WITH THE HIGH-VELOCITY HURRICANE ZONE OF THE FLORIDA BUILDING CODE. ALUMINUM FRAMING ELEMENTS SHALL HAVE A SILVER POWDER COAT FINISH.

4. NO MIRROR-TYPE GLASS IS PROPOSED & COMPLY WITH SECTION 24-58(5)(1)j.iii.

MATERIAL LEGEND

* NOT ALL NOTES APPLICABLE TO THIS SHEET.

DIVISION 03 CONCRETE

03-01	CONCRETE SLAB. SEE STRUCT DWGS.
03-05	CONCRETE COLUMN. SEE STRUCT. DWGS.
03-06	CONCRETE BEAM/HEADER. SEE STRUCT DWGS.
03-07	CONCRETE EYEBROW/CANOPY. SEE STRUCT. DWGS.

DIVISION 05 METALS

05-02	METAL RAILING. 42" MIN. HEIGHT.
05-03	METAL/GLASS RAILING. 48" MIN. HEIGHT.
05-05	METAL TRELLIS FRAMING. SEE STRUCT. DWGS.
05-10	METAL PRIVACY SCREEN.
05-11	EXHAUST VENT. SEE SHEET A-500 FOR DETAIL.

DIVISION 08 DOORS & WINDOWS.

08-01	DOOR AS SCHEDULED.
08-02	WINDOW AS SCHEDULED.
08-03	STOREFRONT DOOR AS SCHEDULED.
08-04	STOREFRONT AS SCHEDULED.
08-05	METAL GRILLES AS SCHEDULED.

DIVISION 09 FINISHES.

09-01	SMOOTH STUCCO FINISH (PAINTED).
09-09	2" DIA. WEEP HOLE WALL DRAINS W/ 2% SLOPE.
09-10	3/4" STUCCO REVEAL PATTERN.
09-11	THICKENED STUCCO PANELS.

DIVISION 10 SPECIALTIES.

10-02	METAL LOUVER BY SPECIALTY ENG.
10-03	PUBLIC ART PIECE BY OTHER.
10-04	SIGNAGE BY OTHER.

Soleste La Piazza

DEVELOPER:
The Estate Companies

ROBERT SURIS
6201 S.W. 70th STREET, STE #200
SOUTH MIAMI, FL 33143

PH. (305) 663-1002
E: rsuris@eigfl.com

CIVIL ENGINEER:
CRAVEN THOMPSON & ASSOC., INC.
3563 N.W. 53rd STREET
FORT LAUDERDALE, FL 33309

PH. (954) 739-6400
E: rcrawford@craventhompsom.com

LANDSCAPE ARCHITECT:
GSLA DESIGN, INC.
17670 N.W. 78th AVENUE, STE 214
MIAMI, FL 33015

PH. (305) 392-1016
E: ken@gsladesign.com

MEP ENGINEER:
--

STRUCTURAL ENGINEER:
--

NEW DEVELOPMENT FOR:
SOLESTE LA PIAZZA
HOLLYWOOD

1845 HOLLYWOOD BOULEVARD
HOLLYWOOD, FL 33020

REVISIONS:

FORMGROUP
architecture •planning

FORM GROUP, INC.
6740 SW 64 CT, MIAMI, FL 33143
TEL. 305.443.4244 FX. 305.443.3338
ARCHITECT OF RECORD:
OMAR MORALES, AIA
AA-0014851

THIS DRAWING, PLANNING, DESIGN(S) AND IDEAS ARE THE PROPERTY OF FORM GROUP, INC. AND ARE NOT TO BE USED IN WHOLE OR IN PART WITHOUT THE WRITTEN CONSENT OF THE ARCHITECT.

PROJECT NO. 22-0301
TITLE: SOUTH ELEVATION
DATE: MARCH 1, 2022
SCALE: AS SHOWN
DRAWING NO.: A-202

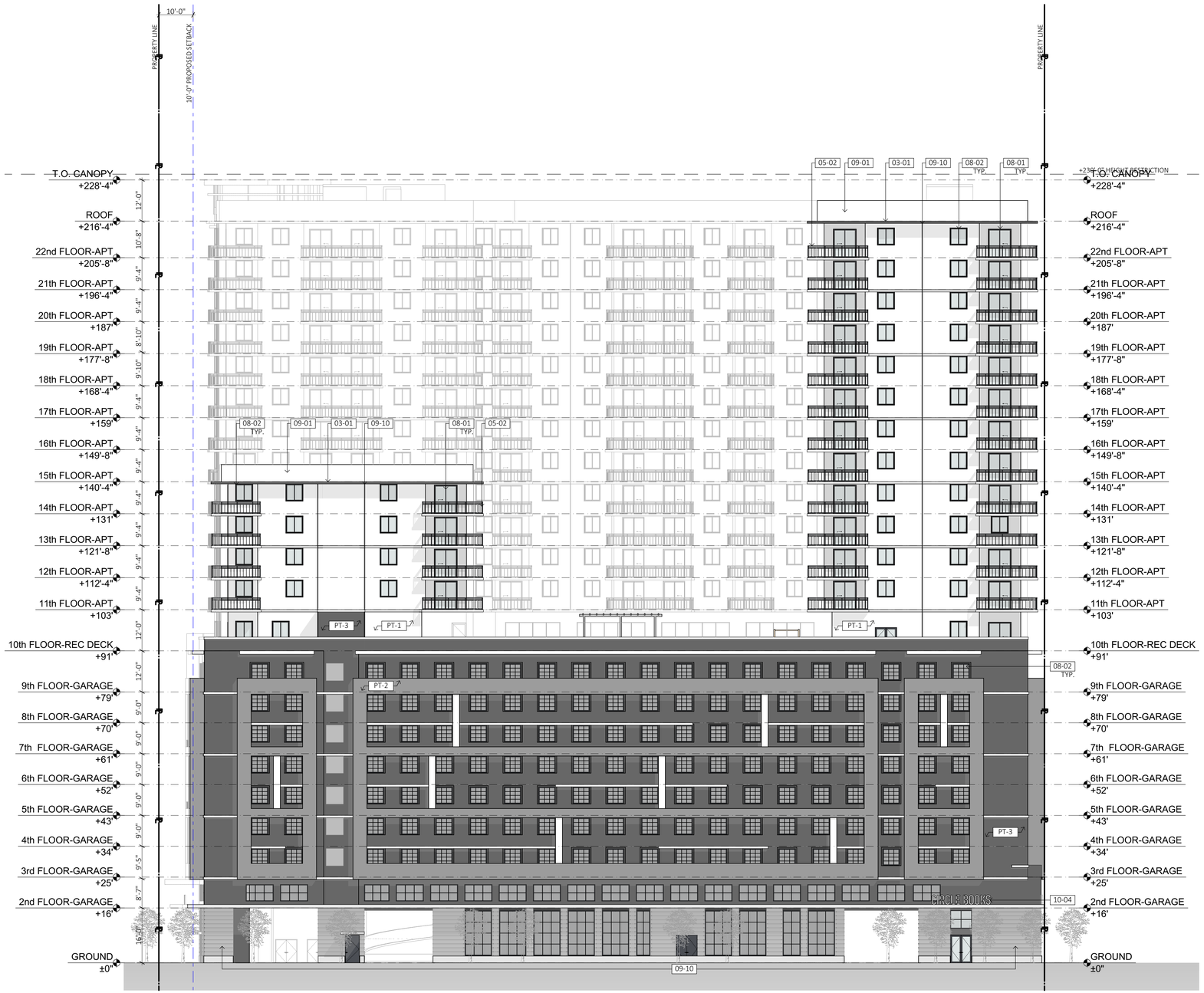

D WEST ELEVATION
SCALE: 1/16" = 1'-0"

PAINT SCHEDULE

DESIGN ID		DESCRIPTION
PT-1		"BENJAMIN MOORE" CHANTILLY LACE 2121-70
PT-2		"BENJAMIN MOORE" PEWTER 2121-30
PT-3		"BENJAMIN MOORE" CITY SHADOW CSP-60
PT-4		PRODEMA WOOD SIDING.

NOTES

1. GROUND FLOOR WINDOW SILLS SHALL BE PLACED AT MAXIMUM HEIGHT OF TWENTY-FOUR (24) INCHES ABOVE GRADE TYP.

3. PROPOSED BALCONY RAILING BASIS OF DESIGN IS AN ALUMINUM PICKET RAILING WITH HORIZONTAL TOP SECTION COMPLIANT WITH THE HIGH-VELOCITY HURRICANE ZONE OF THE FLORIDA BUILDING CODE. ALUMINUM FRAMING ELEMENTS SHALL HAVE A SILVER POWDER COAT FINISH.

4. NO MIRROR-TYPE GLASS IS PROPOSED & COMPLY WITH SECTION 24-58(5)(1)j.iii.

MATERIAL LEGEND

* NOT ALL NOTES APPLICABLE TO THIS SHEET.

DIVISION 03 CONCRETE

03-01	CONCRETE SLAB. SEE STRUCT DWGS.
03-05	CONCRETE COLUMN. SEE STRUCT. DWGS.
03-06	CONCRETE BEAM/HEADER. SEE STRUCT DWGS.
03-07	CONCRETE EYEBROW/CANOPY. SEE STRUCT. DWGS.

DIVISION 05 METALS

05-02	METAL RAILING. 42" MIN. HEIGHT.
05-03	METAL/GLASS RAILING. 48" MIN. HEIGHT.
05-05	METAL TRELLIS FRAMING. SEE STRUCT. DWGS.
05-10	METAL PRIVACY SCREEN.
05-11	EXHAUST VENT. SEE SHEET A-500 FOR DETAIL.

DIVISION 08 DOORS & WINDOWS.

08-01	DOOR AS SCHEDULED.
08-02	WINDOW AS SCHEDULED.
08-03	STOREFRONT DOOR AS SCHEDULED.
08-04	STOREFRONT AS SCHEDULED.
08-05	METAL GRILLES AS SCHEDULED.

DIVISION 09 FINISHES.

09-01	SMOOTH STUCCO FINISH (PAINTED).
09-09	2" DIA. WEEP HOLE WALL DRAINS W/ 2% SLOPE.
09-10	3/4" STUCCO REVEAL PATTERN.
09-11	THICKENED STUCCO PANELS.

DIVISION 10 SPECIALTIES.

10-02	METAL LOUVER BY SPECIALTY ENG.
10-03	PUBLIC ART PIECE BY OTHER.
10-04	SIGNAGE BY OTHER.

Soleste
La Piazza

DEVELOPER:
The Estate Companies
ROBERT SURIS
6201 S.W. 70th STREET, STE #200
SOUTH MIAMI, FL 33143
PH. (305) 663-1002
E: rsuris@eigfl.com

CIVIL ENGINEER:
CRAVEN THOMPSON & ASSOC., INC.
3363 N.W. 53rd STREET
FORT LAUDERDALE, FL 33309
PH. (954) 739-6400
E: rcrawford@craventhompsom.com

LANDSCAPE ARCHITECT:
GSLA DESIGN, INC.
17670 N.W. 78th AVENUE, STE 214
MIAMI, FL 33015
PH. (305) 392-1016
E: ken@gsladesign.com

MEP ENGINEER:
--

STRUCTURAL ENGINEER:
--

NEW DEVELOPMENT FOR:
SOLESTE LA PIAZZA
HOLLYWOOD
1845 HOLLYWOOD BOULEVARD
HOLLYWOOD, FL 33020

REVISIONS:

FORMGROUP
architecture • planning
FORM GROUP, INC.
6740 SW 64 CT, MIAMI, FL 33143
TEL. 305.443.4244 FX. 305.443.3338
ARCHITECT OF RECORD:
OMAR MORALES, AIA
AA-0014851

THE GRAPHIC FORMAT, ATTRIBUTES AND DESIGN AND ANY IDEAS, CONCEPTS, DRAWINGS, PLANS AND SPECIFICATIONS ARE AND SHALL REMAIN THE PROPERTY OF FORM GROUP, INC. AND SHALL NOT BE USED, REPRODUCED OR COPIED IN WHOLE OR IN PART WITHOUT THE EXPRESS CONSENT OF THE ARCHITECT.

PROJECT NO. 22-0301
TITLE: WEST ELEVATION
DATE: MARCH 1, 2022
SCALE: AS SHOWN
DRAWING NO.: A-203

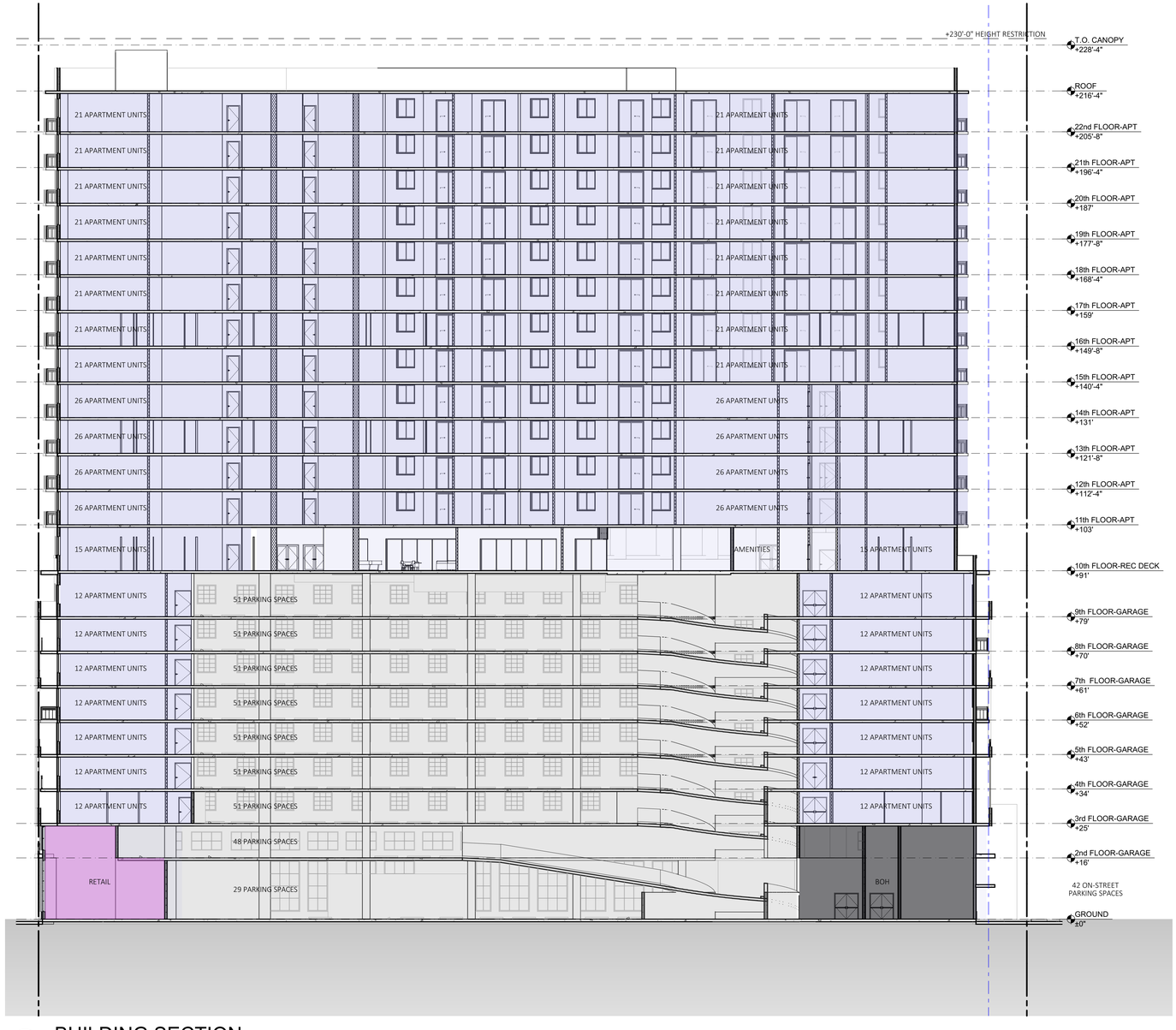

A BUILDING SECTION

SCALE: 1/16" = 1'-0"

Soleste
La Piazza

DEVELOPER:

The Estate Companies

ROBERT SURIS
6201 S.W. 70th STREET, STE #200
SOUTH MIAMI, FL 33143

PH. (305) 663-1002
E: rsuris@eigfl.com

CIVIL ENGINEER:

CRAVEN THOMPSON & ASSOC., INC.
3563 N.W. 53rd STREET
FORT LAUDERDALE, FL 33309

PH. (954) 739-6400
E: rcrawford@craventhompsom.com

LANDSCAPE ARCHITECT:

GSLA DESIGN, INC.
17670 N.W. 78th AVENUE, STE 214
MIAMI, FL 33015

PH. (305) 392-1016
E: ken@gsladesign.com

MEP ENGINEER:

--

STRUCTURAL ENGINEER:

--

NEW DEVELOPMENT FOR:

SOLESTE LA PIAZZA

HOLLYWOOD

1845 HOLLYWOOD BOULEVARD
HOLLYWOOD, FL 33020

REVISIONS:

FORMGROUP
architecture •planning

FORM GROUP, INC.
6740 SW 64 CT, MIAMI, FL 33143
TEL. 305.443.4244 FX. 305.443.3338
ARCHITECT OF RECORD:
OMAR MORALES, AIA
AA-0014851

THE ABOVE CAPSULE TITLE(S), ALL FLOOR AND TOP ELEVATIONS, AND ALL DRAWINGS AND DESIGNS SHALL BE USED, REQUIRED OR USED IN WHOLE OR IN PART WITHOUT THE EXPRESS CONSENT OF THE ARCHITECT

PROJECT NO. 22-0301

TITLE: BUILDING SECTION

DATE: MARCH 1, 2022

SCALE: AS SHOWN

DRAWING NO.: A-300

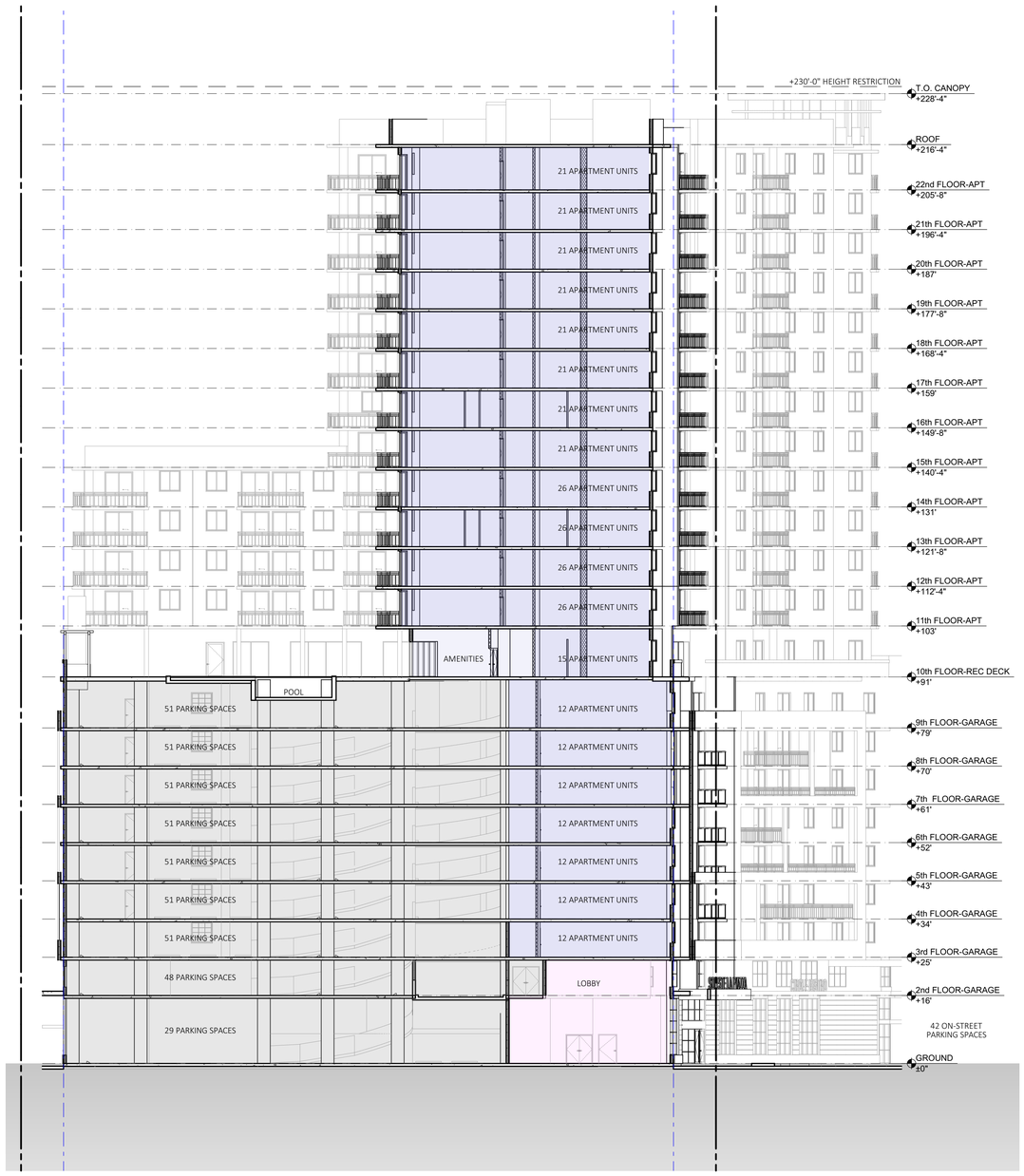

B BUILDING SECTION
SCALE: 1/16" = 1'-0"

Soleste La Piazza

DEVELOPER:
The Estate Companies

ROBERT SURIS
6201 S.W. 70th STREET, STE #200
SOUTH MIAMI, FL 33143

PH. (305) 663-1002
E: rsuris@eigfl.com

CIVIL ENGINEER:
CRAVEN THOMPSON & ASSOC., INC.
3563 N.W. 53rd STREET
FORT LAUDERDALE, FL 33309

PH. (954) 739-6400
E: rcrawford@craventhompsom.com

LANDSCAPE ARCHITECT:
GSLA DESIGN, INC.
17670 N.W. 78th AVENUE, STE 214
MIAMI, FL 33015

PH. (305) 392-1016
E: ken@gsladesign.com

MEP ENGINEER:
--

STRUCTURAL ENGINEER:
--

NEW DEVELOPMENT FOR:
SOLESTE LA PIAZZA
HOLLYWOOD

1845 HOLLYWOOD BOULEVARD
HOLLYWOOD, FL 33020

REVISIONS:

FORMGROUP architecture • planning

FORM GROUP, INC.
6740 SW 64 CT, MIAMI, FL 33143
TEL. 305.443.4244 FX. 305.443.3338
ARCHITECT OF RECORD:
OMAR MORALES, AIA
AA-0014851

THIS ARCHIVE CONTAINS PROPRIETARY AND PROPRIETARY INFORMATION. THIS DOCUMENT MAY NOT BE REPRODUCED, PRINTED OR COPIED, AND SHALL NOT BE DISPLAYED, DISCLOSED OR USED IN WHOLE OR IN PART WITHOUT THE WRITTEN CONSENT OF THE ARCHITECT.

PROJECT NO.
22-0301

TITLE:
BUILDING SECTION

DATE:
MARCH 1, 2022

SCALE:
AS SHOWN

DRAWING NO.:
A-301

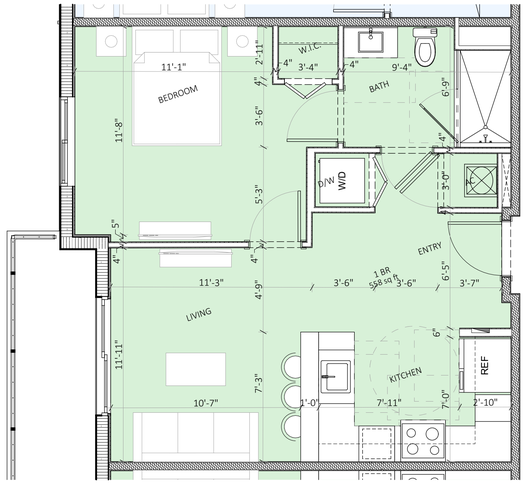

A TYP. 1 - BEDROOM UNIT
SCALE: 1/4" = 1'-0"

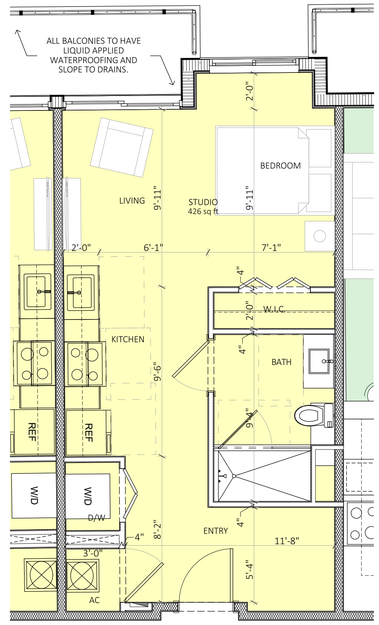

ST TYP. STUDIO UNIT
SCALE: 1/4" = 1'-0"

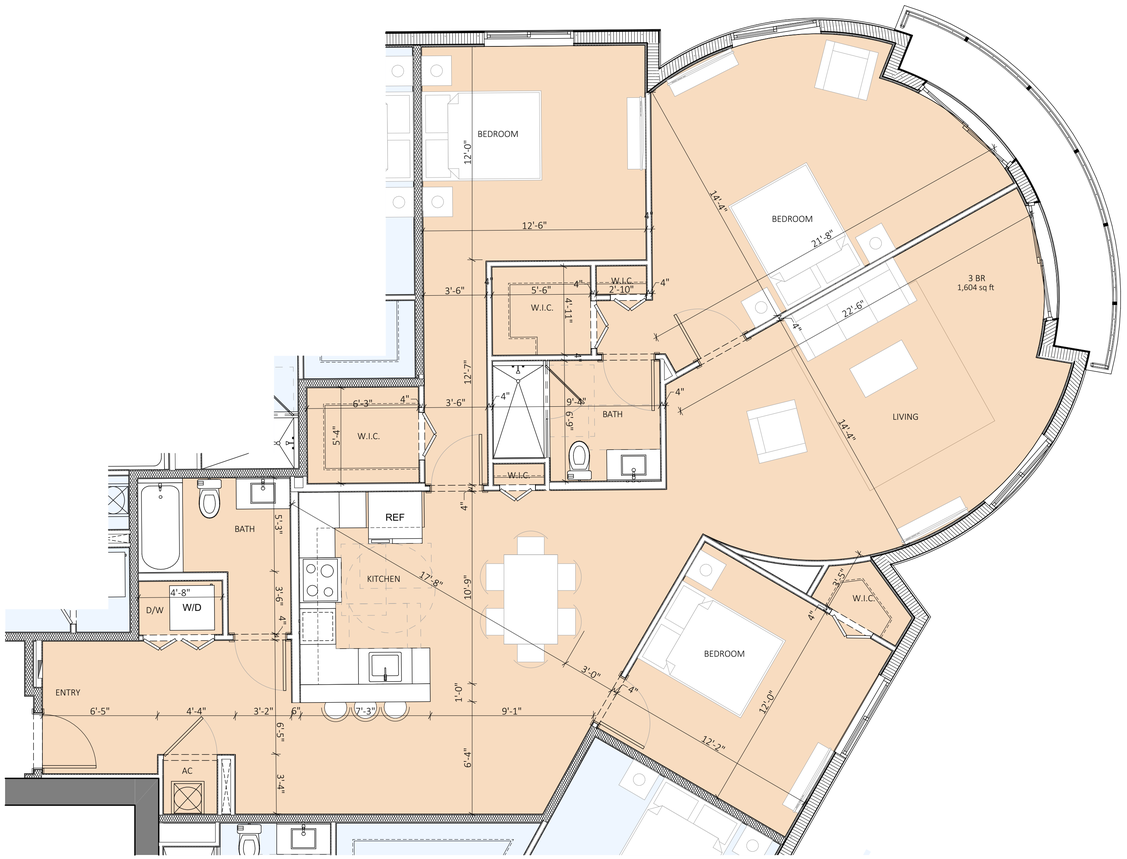

C TYP. 3 - BEDROOM UNIT
SCALE: 1/4" = 1'-0"

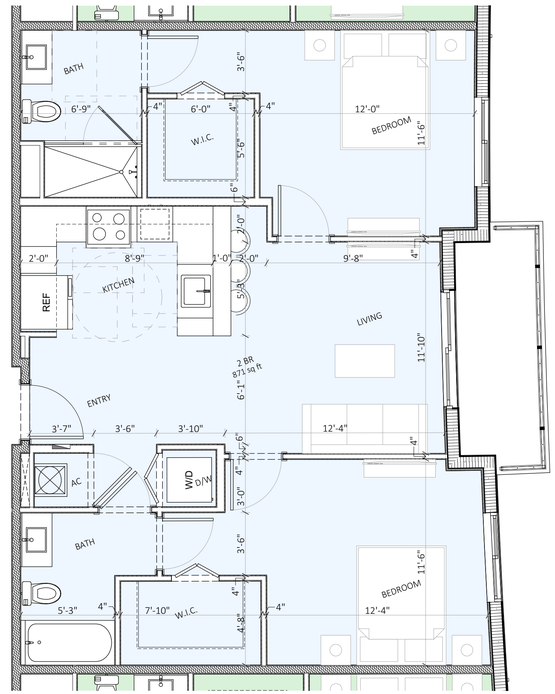

B TYP. 2 - BEDROOM UNIT
SCALE: 1/4" = 1'-0"

Soleste
La Piazza

DEVELOPER:
The Estate Companies

ROBERT SURIS
6201 S.W. 70th STREET, STE #200
SOUTH MIAMI, FL 33143

PH. (305) 663-1002
E: rsuris@eigfl.com

CIVIL ENGINEER:
CRAVEN THOMPSON & ASSOC., INC.
3563 N.W. 53rd STREET
FORT LAUDERDALE, FL 33309

PH. (954) 739-6400
E: rcrawford@craventhompsom.com

LANDSCAPE ARCHITECT:
GSLA DESIGN, INC.
17670 N.W. 78th AVENUE, STE 214
MIAMI, FL 33015

PH. (305) 392-1016
E: ken@gsladesign.com

MEP ENGINEER:
--

STRUCTURAL ENGINEER:
--

NEW DEVELOPMENT FOR:
SOLESTE LA PIAZZA
HOLLYWOOD

1845 HOLLYWOOD BOULEVARD
HOLLYWOOD, FL 33020

REVISIONS:

FORMGROUP
architecture •planning

FORM GROUP, INC.
6740 SW 64 CT, MIAMI, FL 33143
TEL. 305.443.4244 FX. 305.443.3338
ARCHITECT OF RECORD:
OMAR MORALES, AIA
AA-0014851

THIS ARCH'S PROJECT, PROVIDED IN THIS DRAWING AND THE INFORMATION CONTAINED HEREIN, IS THE PROPERTY OF FORM GROUP, INC. AND SHALL NOT BE USED, REPRODUCED OR COPIED IN WHOLE OR IN PART WITHOUT THE WRITTEN PERMISSION OF THE ARCHITECT.

PROJECT NO.: 22-0301
TITLE: UNIT TYPES
DATE: MARCH 1, 2022
SCALE: AS SHOWN
DRAWING NO.: A-400

SOLESTE LA PIAZZA

LEGAL DESCRIPTION:

LOTS 1 THROUGH 14, BLOCK 41, HOLLYWOOD, ACCORDING TO THE MAP OR PLAT THEREOF, AS RECORDED IN MAP BOOK 1, PAGE 21, OF THE PUBLIC RECORDS OF BROWARD COUNTY, FLORIDA, TOGETHER WITH THE VACATED 13 FOOT ALLEY DESCRIBED IN OFFICIAL RECORDS BOOK 22466, PAGE 38, OF THE PUBLIC RECORDS OF BROWARD COUNTY, FLORIDA.

SAID LANDS SITUATE IN THE CITY OF HOLLYWOOD, BROWARD COUNTY, FLORIDA AND CONTAIN 44,124 SQUARE FEET (1.013 ACRES) MORE OR LESS.

CITY OF HOLLYWOOD
BROWARD COUNTY, FLORIDA

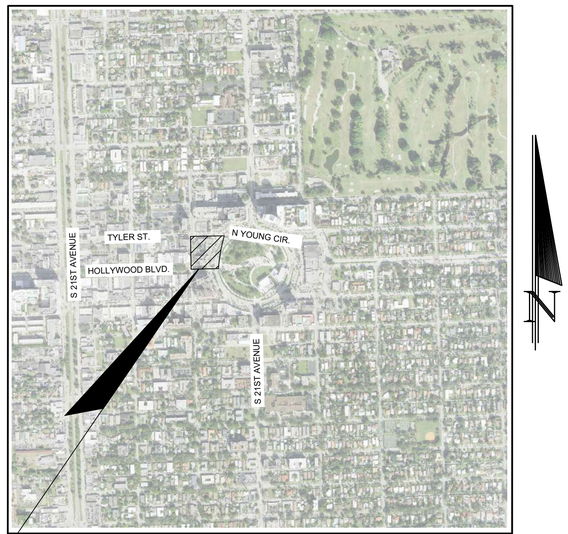

LOCATION MAP
SECTION 15, TOWNSHIP 51 SOUTH, RANGE 42 EAST

SHEET INDEX		
SHEET NO.	DESCRIPTION	REV
C-1	COVER SHEET	
C-2	GENERAL NOTES & SPECIFICATIONS	
C-3	DEMOLITION PLAN	
C-4	EROSION CONTROL PLAN	
C-5	PAVING, GRADING, & DRAINAGE PLAN	
C-6	WATER AND SEWER PLAN	
C-7	PAVEMENT MARKING AND SIGNAGE PLAN	
C-8 TO C-9	PAVING, GRADING, & DRAINAGE DETAILS	
C-10	PAVEMENT MARKING AND SIGNAGE DETAILS	
C-11 TO C-17	WATER AND SEWER DETAILS	

ELEVATION TABLE	
DESCRIPTION	ELEVATION
BROWARD COUNTY FUTURE CONDITIONS 100 YEAR FLOOD ELEVATION	11.00 N.A.V.D.
FEMA BASE FLOOD ELEVATION	N/A ZONE X
HIGHEST ADJACENT ROAD CROWN	7.89 N.A.V.D.
18" ABOVE HIGHEST ROAD CROWN ADJACENT TO PROPERTY	9.39 N.A.V.D.
PROPOSED FINISHED FLOOR ELEVATION	11.00 N.A.V.D.

VERTICAL INFORMATION HEREON IS RELATIVE TO THE NORTH AMERICAN VERTICAL DATUM (NAVD88).

ENGINEERING PLANS

PREPARED FOR:

THE ESTATE COMPANIES

CRAVEN • THOMPSON AND ASSOCIATES, INC.
ENGINEERS • PLANNERS • SURVEYORS
3563 N.W. 53RD STREET, FORT LAUDERDALE, FLORIDA 33309
FAX: (954) 739-6409 TEL.: (954) 739-6400

FLORIDA LICENSED ENGINEERING, SURVEYING & MAPPING BUSINESS No. 271
FLORIDA LICENSED LANDSCAPE ARCHITECTURE BUSINESS No. C000114

MATERIAL SHOWN HEREON IS THE PROPERTY OF CRAVEN THOMPSON & ASSOCIATES, INC. AND SHALL NOT BE REPRODUCED IN WHOLE OR IN PART WITHOUT PERMISSION OF CRAVEN THOMPSON & ASSOCIATES, INC. WRITING CRAVEN THOMPSON & ASSOCIATES, INC. COPYRIGHT ©2023.

REV. #	DESCRIPTION	DATE

Chad Everett Edwards
Florida P.E. No. 59306
March 17, 2023

SHEET C-1
MARCH 2023
CTA PROJECT NUMBER: 22-0064-001-01

CITY REFERS TO: CITY 0F HOLLYWOOD

I. APPLICABLE CODES

A. ALL CONSTRUCTION AND MATERIALS SHALL CONFORM TO CITY STANDARDS AND SPECIFICATIONS, AND ALL OTHER LOCAL, STATE AND NATIONAL CODES WHERE APPLICABLE. ALL CONSTRUCTION WITHIN FDOT R/W SHALL BE CONSTRUCTED PER FDOT MINIMUM STANDARDS. ALL CONSTRUCTION WITHIN BROWARD COUNTY R/W SHALL BE CONSTRUCTED PER BROWARD COUNTY MINIMUM STANDARDS.

B. ALL CONSTRUCTION SHALL BE DONE IN A SAFE MANNER AND IN STRICT COMPLIANCE WITH ALL THE REQUIREMENTS OF FEDERAL OCCUPATIONAL SAFETY AND HEALTH ACT OF 1970, AND ALL STATE AND LOCAL SAFETY AND HEALTH REGULATIONS.

C. ALL ELEVATIONS SHOWN ON THE CONSTRUCTION DRAWINGS ARE BASED ON THE NORTH AMERICAN VERTICAL DATUM OF 1988, (N.A.V.D.), UNLESS OTHERWISE NOTED.

D. ALL MATERIALS AND CONSTRUCTION SHALL CONFORM TO CITY, BROWARD COUNTY AND/OR FDOT SPECIFICATIONS (WHICHEVER APPLIES).

E. CITY, BROWARD COUNTY AND/OR FDOT SPECIFICATIONS SHALL DICTATE WHEN IN CONFLICT WITH ANY OF THE FOLLOWING SPECIFICATIONS.

F. CONTRACTOR SHALL BE SOLELY RESPONSIBLE FOR COMPLIANCE WITH THE STATE OF FLORIDA TRENCH SAFETY ACT.

II. PRECONSTRUCTION RESPONSIBILITIES

A. UPON THE RECEIPT OF THE "NOTICE TO PROCEED", THE CONTRACTOR SHALL CONTACT THE ENGINEER OF RECORD AND ARRANGE A PRECONSTRUCTION CONFERENCE TO INCLUDE ALL INVOLVED GOVERNMENTAL AGENCIES, UTILITY OWNERS, THE OWNER AND THE ENGINEER OF RECORD.

B. THE CONTRACTOR SHALL OBTAIN A SUNSHINE STATE ONE CALL OF FLORIDA CERTIFICATION NUMBER AT LEAST 48 HOURS PRIOR TO BEGINNING ANY EXCAVATION, CALL 1-800-432-4770.

C. ALL UTILITY EASEMENTS TO BE SECURED PRIOR TO CONSTRUCTION (IF REQUIRED).

D. LOCATION OF EXISTING FACILITIES AS SHOWN ON CONSTRUCTION DRAWINGS ARE DRAWN FROM AVAILABLE RECORDS. THE ENGINEER ASSUMES NO RESPONSIBILITY FOR THE ACCURACY OF THE FACILITIES SHOWN OR FOR ANY FACILITY NOT SHOWN. THE CONTRACTOR SHALL VERIFY, IF POSSIBLE, THE ELEVATIONS AND LOCATIONS OF EXISTING FACILITIES PRIOR TO CONSTRUCTION. IF AN EXISTING FACILITY IS FOUND TO CONFLICT WITH THE PROPOSED CONSTRUCTION UPON EXCAVATION, THE CONTRACTOR SHALL IMMEDIATELY NOTIFY THE ENGINEER OF RECORD SO THAT APPROPRIATE MEASURES CAN BE TAKEN TO RESOLVE THE PROBLEM.

E. A SEPARATE CALCULATED SITE PLAN WILL BE REQUIRED PRIOR TO CONSTRUCTION TO VERIFY PROPOSED BUILDING, CURB, AND SITE WORK LOCATIONS.

F. AT LEAST TWO (2) DAYS PRIOR TO THE START OF CONSTRUCTION, THE CONTRACTOR SHALL SUBMIT A CEP "NOTICE OF INTENT (N.O.I) TO USE GENERAL PERMIT FOR STORMWATER DISCHARGE FROM CONSTRUCTION ACTIVITIES THAT DISTURB AN ACRE OR MORE OF LAND" FORM (DEP FORM 62-621.300(4)(B)). TO FDEP NOTICES CENTER. THE CONTRACTOR WILL BE RESPONSIBLE FOR: (1) IMPLEMENTATION OF A STORMWATER POLLUTION PREVENTION PLAN (SWPPP) THAT IS REQUIRED TO BE DEVELOPED PRIOR TO THE N.O.I. SUBMITTAL, AND (2) RETENTION OF RECORDS REQUIRED BY THE PERMIT, INCLUDING RETENTION OF A COPY OF THE SWPPP AT THE CONSTRUCTION SITE FROM THE DATE OF PROJECT INITIATION TO THE DATE OF FINAL SITE STABILIZATION. A "NOTICE OF TERMINATION (N.O.T.) OF GENERIC PERMIT COVERAGE" FORM (DEP FORM 62-621.300(6)) MUST BE SUBMITTED TO FDEP TO DISCONTINUE PERMIT COVERAGE, SUBSEQUENT TO COMPLETION OF CONSTRUCTION. FOR ADDITIONAL INFORMATION SEE FDEP WEBSITE: http://www.dep.state.fl.us/water/stormwater/npdes. CONTRACTOR SHALL BE RESPONSIBLE TO PREPARE A SWPPP AND SUBMIT TO THE ENGINEER FOR APPROVAL AND COMPLY WITH ALL PROVISOINS OF CHAPTER 62-621.

G. THE CONTRACTOR SHALL BE RESPONSIBLE FOR OBTAINING ALL REQUIRED DEWATERING PERMITS AND TREE REMOVAL / RELOCATION PERMITS.

III. INSPECTIONS

A. THE CONTRACTOR SHALL NOTIFY THE CITY'S ENGINEERING DEPARTMENT, BROWARD COUNTY, THE ENGINEER OF RECORD, FDOT, AND ANY OTHER GOVERNMENTAL AGENCIES HAVING JURISDICTION AT LEAST 24 HOURS PRIOR TO BEGINNING CONSTRUCTION AND PRIOR TO THE INSPECTION OF THE FOLLOWING ITEMS, WHERE APPLICABLE:

1. CLEARING AND FILLING
2. STORM DRAINAGE SYSTEM
3. SANITARY SEWER SYSTEM
4. WATER DISTRIBUTION SYSTEM
5. SUBGRADE
6. LIMEROCK BASE
7. ASPHALTIC CONCRETE / PAVER BRICK COURSE
8. SIDEWALK
9. FINAL

IV. SHOP DRAWINGS

A. PRIOR TO THEIR CONSTRUCTION OR INSTALLATION, SHOP DRAWINGS SHALL BE SUBMITTED TO AND APPROVED BY THE ENGINEER OF RECORD FOR THE FOLLOWING: SANITARY MANHOLES,, STORM DRAIN MANHOLES, CATCH BASINS, FIRE HYDRANTS, PIPING, VALVES AND ALL REQUIRED ACCESSORIES. IT IS THE RESPONSIBILITY OF THE CONTRACTOR TO OBTAIN ALL OTHER AGENCY APPROVALS IF REQUIRED.

V. TEMPORARY FACILITIES

A. TEMPORARY FACILITIES:

1. IT SHALL BE THE CONTRACTOR'S RESPONSIBILITY TO ARRANGE FOR OR SUPPLY TEMPORARY WATER SERVICE, SANITARY FACILITIES, TELEPHONE SERVICE AND ELECTRICITY.

B. TRAFFIC REGULATION:

1. MAINTENANCE OF TRAFFIC IN THE PUBLIC RIGHTS-OF-WAY SHALL BE IN ACCORDANCE WITH M.U.T.C.D.

2. ALL OPEN TRENCHES AND HOLES ADJACENT TO ROADWAYS OR WALKWAYS SHALL BE PROPERLY MARKED AND BARRICADED TO ASSURE THE SAFETY OF BOTH VEHICULAR AND PEDESTRIAN TRAFFIC.

3. NO TRENCHES OR HOLES NEAR WALKWAYS, IN ROADWAYS OR THEIR SHOULDERS ARE TO BE LEFT OPEN DURING NIGHTTIME HOURS WITHOUT EXPRESS PERMISSION OF THE CITY.

4. IT SHALL BE THE RESPONSIBILITY OF THE GENERAL CONTRACTOR FOR ANY NECESSARY CONSTRUCTION, PAVEMENT MARKING AND SIGNAGE OR ANY PEDESTRIAN SIGNALIZATION AND/OR SIGNAL MODIFICATION TO ACCOMMODATE AN ALTERNATE SAFE WALK ROUTE.

VI. WATER DISTRIBUTION SYSTEM

A. BROWARD COUNTY HEALTH DEPT. & CITY STANDARDS AND SPECIFICATIONS SHALL GOVERN & SUPERCEDE ALL OTHER REQUIREMENTS FOR WATERMAIN CONSTRUCTION.

B. SEPARATION OF WATER AND SEWER MAINS

1. SANITARY SEWERS, STORM SEWERS, AND FORCE MAINS SHOULD CROSS UNDER WATER MAINS WHENEVER POSSIBLE. SANITARY SEWERS, STORM SEWERS, AND FORCE MAINS CROSSING WATER MAINS SHALL BE LAID TO PROVIDE A MINIMUM VERTICAL DISTANCE OF 18 INCHES BETWEEN THE INVERT OF THE UPPER PIPE AND THE CROWN OF THE LOWER PIPE WHENEVER POSSIBLE.

2. WHERE SANITARY SEWERS, STORM SEWERS, OR FORCE MAINS MUST CROSS A WATER MAIN WITH LESS THAN 18 INCHES VERTICAL DISTANCE, BOTH THE SEWER AND THE WATER MAIN SHALL BE CONSTRUCTED OF DUCTILE IRON PIPE (DIP) AT THE CROSSING. SUFFICIENT LENGTHS OF DIP MUST BE USED TO PROVIDE A MINIMUM SEPARATION OF 10 FEET BETWEEN ANY TWO JOINTS. ALL JOINTS ON THE WATER MAIN WITHIN 20 FEET OF THE CROSSING MUST BE MECHANICALLY RESTRAINED. A MINIMUM VERTICAL CLEARANCE OF 6 INCHES MUST BE MAINTAINED AT ALL CROSSINGS.

3. ALL CROSSING SHALL BE ARRANGED SO THAT THE SEWER PIPE JOINTS AND THE WATER MAIN PIPE JOINT ARE EQUIDISTANT FROM THE POINT OF CROSSING (PIPES CENTERED ON THE CROSSING).

4. WHERE A NEW PIPE CONFLICTS WITH AN EXISTING PIPE WITH LESS THAN 18 INCHES VERTICAL CLEARANCE, THE NEW PIPE SHALL BE CONSTRUCTED OF DIP, AND THE CROSSING SHALL BE ARRANGED TO MEET THE REQUIREMENTS ABOVE.

5. A MINIMUM 10-FOOT HORIZONTAL SEPARATION SHALL BE MAINTAINED BETWEEN ANY TYPE OF SEWER AND WATER MAIN IN PARALLEL INSTALLATIONS WHENEVER POSSIBLE.

6. IN CASES WHERE IT IS NOT POSSIBLE TO MAINTAIN A 10 FOOT HORIZONTAL SEPARATION, THE WATER MAIN MUST BE LAID IN A SEPARATE TRENCH OR ON AN UNDISTURBED EARTH SHELF LOCATED ON ONE SIDE OF THE SEWER OR FORCE MAIN AT SUCH AN ELEVATION THAT THE BOTTOM OF THE WATER IS AT LEAST 18 INCHES ABOVE THE TOP OF THE SEWER.

7. WHERE IT IS NOT POSSIBLE TO MAINTAIN A VERTICAL DISTANCE OF 18 INCHES IN PARALLEL INSTALLATIONS, THE WATER MAIN SHALL BE CONSTRUCTED OF DIP AND THE SANITARY SEWER OR THE FORCE MAIN SHALL BE CONSTRUCTED OF DIP WITH A MINIMUM VERTICAL DISTANCE OF 6 INCHES. THE WATER MAIN SHOULD ALWAYS BE ABOVE THE SEWER. JOINTS ON THE WATER MAIN SHALL BE LOCATED AS FAR APART AS POSSIBLE FROM JOINTS ON THE SEWER OR FORCE MAIN (STAGGERED JOINTS).

8. CONTRACTOR SHALL MAINTAIN WATER SERVICE TO ALL EXISTING FACILITIES DURING CONSTRUCTION.

C. MATERIALS:

1. ALL PIPE LARGER THAN 12" DIAMETER MUST BE DUCTILE IRON (MIN. CLASS 50). 8" AND 10" SHALL BE CLASS 50 AND 6" DIP (MIN. CLASS 52). ALL DUCTILE IRON PIPE SHALL CONFORM TO THE REQUIREMENTS OF ANSI/AWWA C151/A21.51-02 AND CEMENT MORTAR LINED AND SEAL COATED PER ANSI/AWWA C104/A21.4-03. SEE CITY AND BROWARD COUNTY STANDARDS & SPECIFICATIONS FOR FURTHER D.I.P. REQUIREMENTS.

2. FITTINGS SHALL BE COMPACT DUCTILE IRON MECHANICAL JOINT TYPE AND SHALL BE CLASS 350 THROUGH 24" CONFORMING TO ANSI/AWWA C-153/A21.53-00 SPECIFICATIONS. FITTINGS MUST BE CEMENT LINED AND SEAL COATED PER ANSI/AWWA C104/A21.4-03.

3. VALVES SHALL BE GATE VALVES, IRON BODY, FULLY RESILIENT SEAT BRONZED MOUNTED NON-RISING STEM, RATED AT 150 PSI AND CONFORMING TO ANSI/AWWA C509-01 OR LATEST REVISION, AND SHALL HAVE MECHANICAL JOINTS.

   a. GATE VALVES 4" AND LARGER SHALL BE MUELLER A-2370-20, RESILIENT SEATED GATE VALVES SHALL BE AMERICAN AFR2500 LINE OR CLOW F-6100, CONFORMING TO ANSI/AWWA C500-02. SEE BROWARD COUNTY, AND CITY CONSTRUCTION STANDARDS & SPECIFICATIONS FOR ADDITIONAL REQUIREMENTS.

   b. TAPPING VALVES SHALL BE MUELLER H615 OR APPROVED EQUAL.

   c. GATE VALVES 3" OR LESS SHALL BE NIBCO T-133 OR T-136 WITH MALLEABLE HAND WHEELS. NO SUBSTITUTIONS ALLOWED.

4. TAPPING SLEEVES SHALL BE MUELLER H615, CLOW F-2505 OR APPROVED EQUAL. SEE BROWARD COUNTY, AND CITY CONSTRUCTION STANDARDS & SPECIFICATIONS FOR ADDITIONAL REQUIREMENTS.

5. VALVE BOXES SHALL BE US FOUNDRY SERIES 7500 OR APPROVED EQUAL.

6. RETAINER GLANDS SHALL CONFORM TO ANSI/AWWA C111/A21.11-00 OR LATEST REVISION. ALL GLANDS SHALL BE MANUFACTURED FROM DUCTILE IRON AS LISTED BY UNDERWRITERS LABORATORIES FOR 250 PSI MINIMUM WATER PRESSURE RATING. CLOW CORPORATION MODEL F-1058, STANDARD FIRE PROTECTION EQUIPMENT COMPANY OR APPROVED EQUAL.

7. DRESSER COUPLINGS SHALL BE REGULAR BLACK COUPLINGS WITH PLAIN GASKETS FOR GALVANIZED STEEL PIPE. THEY SHALL BE DRESSER STYLE 90. NO SUBSTITUTIONS ALLOWED.

8. FIRE HYDRANTS SHALL BE MUELLER CENTURION TRAFFIC TYPE A-423 WITH 5 1/4" INTERNAL VALVE OPENING OR APPROVED EQUAL. MAIN VALVE OPENING TO BE DETERMINED BY THE WATER DEPARTMENT. PUMPER NOZZLE TO BE 18" FROM FINISHED GRADE. ALL HYDRANTS TO BE INSTALLED WITH CONTROL VALVE. RETAINER GLANDS ARE REQUIRED FOR RESTRAINING. FIRE HYDRANT SHALL COMPLY WITH ANSI/AWWA C502-05. SEE BROWARD COUNTY AND CITY CONSTRUCTION STANDARDS & SPECIFICATIONS FOR ADDITIONAL REQUIREMENTS.

D. SERVICE CONNECTION:

1. SERVICE SADDLES SHALL BE STAINLESS STEEL STRAPS, SADDLES SHALL BE DOUBLE STRAP TYPE. ALL SERVICE SADDLES SHALL CONFORM TO ANSI/AWWA C111/A21.11-00 AND ASTM A-588.

2. SERVICE LINES SHALL BE POLYETHYLENE (3408), 250 PSI RATED, SDR9. PIPE JOINTS SHALL BE OF THE COMPRESSION TYPE TOTALLY CONFINED GRIP SEAL AND COUPLING NUT.

3. CORPORATION STOPS SHALL BE MANUFACTURED OF BRASS ALLOY IN ACCORDANCE WITH ASTM B-62 WITH THREADED ENDS, AS MANUFACTURED BY MUELLER B-25008 OR APPROVED EQUAL.

4. CURB STOPS SHALL BE MUELLER H10203 OR APPROVED EQUAL.

5. METER STOPS SHALL BE LOCKWING TYPE AND SHALL BE OF BRONZE CONSTRUCTION IN ACCORDANCE WITH ASTM B-62. METER STOPS SHALL BE CLOSED BOTTOM DESIGN AND RESILIENT "O" RING SEALED AGAINST EXTERNAL LEAKAGE AT THE TOP. STOPS SHALL BE EQUIPPED WITH A METER COUPLING NUT ON THE OUTLET SIDES, AS MANUFACTURED BY MUELLER OR APPROVED EQUAL.

E. INSTALLATION:

1. ALL PVC PIPE SHALL BE INSTALLED IN ACCORDANCE WITH THE UNI-BELL PLASTIC PIPE ASSOCIATIONS "GUIDE FOR INSTALLATION OF PVC PRESSURE PIPE FOR MUNICIPAL WATER DISTRIBUTION SYSTEM." SEE BROWARD COUNTY AND CITY CONSTRUCTION STANDARDS & SPECIFICATIONS FOR ADDITIONAL REQUIREMENTS.

2. ALL DIP SHALL BE INSTALLED IN ACCORDANCE WITH ANSI/AWWA C600-05 OR LATEST REVISION.

3. ALL WATER MAINS SHALL BE LAID WITH A MINIMUM 36" COVER FOR PVC AND 30" FOR DIP.

4. NO CONNECTIONS TO EXISTING LINES SHALL BE MADE UNTIL PRESSURE TESTS & BACTERIOLOGICAL TESTS HAVE BEEN PERFORMED AND THE SYSTEM IS ACCEPTABLE TO THE CITY OR BROWARD COUNTY BEACH AND PUBLIC HEALTH UNIT.

5. PIPE DEFLECTION SHALL NOT EXCEED 75% OF THE MAXIMUM DEFLECTION RECOMMENDED BY THE MANUFACTURER.

6. A CONTINUOUS AND UNIFORM BEDDING SHALL BE PROVIDED. BACKFILL MATERIAL SHALL BE TAMPED IN LAYERS AROUND THE PIPE AS SHOWN ON THE PLANS. STONES FOUND IN THE TRENCH SHALL BE REMOVED FOR A DEPTH OF AT LEAST 6" BELOW THE BOTTOM OF THE PIPE.

7. ALL VALVES SHALL BE INSTALLED WITH ADJUSTABLE CAST IRON VALVE BOXES WITH THE WORD "WATER" CAST IN THE COVER. U.S.F. OR APPROVED EQUAL.

8. ALL WATER MAIN INSTALLATIONS SHALL COMPLY WITH THE COLOR CODING REQUIREMENTS OF CHAPTER 62-555.320, FAC.

F. TESTING:

1. FOR TESTING REQUIREMENTS SEE CITY AND BROWARD COUNTY CONSTRUCTION STANDARDS & SPRCIFICATIONS.

2. BEFORE ANY PHYSICAL CONNECTIONS TO THE EXISTING WATER MAINS ARE MADE, THE COMPLETE WATER SYSTEM SHALL BE PRESSURE TESTED AND DISINFECTED. HYDROSTATIC TESTING OF NEW MAINS SHALL BE PERFORMED AT A MINIMUM STARTING PRESSURE OF 150 PSI FOR TWO HOURS IN ACCORDANCE WITH ANSI/AWWA C600-05 OR LATEST REVISION, THE PRESSURE TEST SHALL NOT VARY MORE THAN 5 PSI DURING THE TEST.

3. THE PRESSURE TEST SHALL BE WITNESSED BY A REPRESENTATIVE OF THE CITY OR BROWARD COUNTY AND THE ENGINEER OF RECORD.

4. BEFORE ACCEPTANCE FOR OPERATION, THE WATER SYSTEM SHALL BE DISINFECTED IN ACCORDANCE WITH THE ANSI/AWWA C651-05; 150 PSI MINIMUM STARTING TEST PRESSURE. METER RECONNECTIONS MAY BE MADE TO NEW LINES AFTER TWO CONSECUTIVE DAYS OF BACTERIOLOGICAL SAMPLES HAVE PASSED, AND UPON WRITTEN APPROVAL HAS BEEN RECEIVED BY THE ENGINEER, CITY, AND HRS.

5. SAMPLING POINTS SHALL BE PROVIDED AT THE LOCATIONS SHOWN ON THE PLANS. IF NOT SPECIFIED, SAMPLING POINTS SHALL BE PROVIDED AT INTERVALS OF 1500' MAXIMUM FOR LINES GREATER THAN 1500' IN LENGTH.

6. THE ALLOWABLE LEAKAGE SHALL BE LESS THAN THE NUMBER OF GALLONS PER HOUR AS DETERMINED BY THE FORMULA:

$$L = \frac{S\,D\,P^{0.5}}{148000}$$

IN WHICH L EQUALS THE ALLOWABLE LEAKAGE IN GALLONS PER HOUR, S EQUALS LENGTH OF PIPE (LINEAR FEET), D EQUALS NOMINAL DIAMETER OF PIPE (INCHES) AND P EQUALS THE MINIMUM TEST PRESSURE (POUNDS PER SQUARE INCH).

VII. GRAVITY SEWER COLLECTION SYSTEM:

A. CITY AND BROWARD COUNTY EPD CONSTRUCTION STANDARDS & SPECIFICATIONS SHALL GOVERN & SUPERCEDE ALL OTHER REQUIREMENTS FOR SANITARY SEWER CONSTRUCTION.

B. GENERAL:

1. DISTANCE AND LENGTHS SHOWN ON PLANS ARE REFERENCED TO THE CENTER OF STRUCTURES.

C. MATERIALS:

1. ALL SEWER PIPE AND FITTINGS SHALL BE PVC PIPE CONFORMING TO ASTM D 3034, SDR-35 WITH PUSH-ON RUBBER GASKET JOINTS, UNLESS OTHERWISE NOTED, OR DUCTILE IRON PIPE SHALL BE (MIN. CLASS 52) AS INDICATED ON THE DRAWINGS.

2. MANHOLES SHALL BE PRECAST PER ASTM C 478 WITH 4,000 PSI CONCRETE AND GRADE 60 STEEL. MONOLITHICALLY POURED BASES ONLY.

3. MANHOLES ARE TO BE SEALED WITH ANTI-HYDRO CEMENT OR APPROVED EQUAL - NO MOULDING PLASTER.

D. INSTALLATION:

1. PVC SEWER PIPE SHALL BE LAID IN ACCORDANCE WITH ASTM D 2321 AND THE UNI-BELL PLASTIC PIPE ASSOCIATION'S "RECOMMENDED PRACTICE FOR THE INSTALLATION OF PVC SEWER PIPE."

2. DUCTILE IRON PIPE SHALL BE INSTALLED IN ACCORDANCE WITH ANSI/AWWA C600-05 OR LATEST REVISION.

3. PVC MANHOLE ADAPTOR SHALL BE GROUTED IN PLACE AT EACH PIPE CONNECTION INTO A MANHOLE WALL.

4. MANHOLES SHALL BE SET PLUMB TO LINE AND GRADE ON FIRM SUBGRADE PROVIDING UNIFORM BEARING UNDER THE BASE.

5. ALL OPENINGS AND JOINTS SHALL BE SEALED WATERTIGHT.

6. THE ENTIRE INSIDE AND OUTSIDE OF THE MANHOLES SHALL BE PAINTED WITH TWO COATS OF DIFFERENT COLORS (8 MILS EACH) OF KOPPERS 300-M BITUMASTIC PAINT OR ENGINEER'S APPROVED EQUAL.

E. TESTING:

1. AFTER CONSTRUCTION OF THE SEWER SYSTEM, THE ENGINEER MAY REQUIRE A VISUAL INFILTRATION AND/OR EXFILTRATION TEST TO BE PERFORMED ON THE ENTIRE SYSTEM OR ANY PART THEREOF.

2. AN AIR TEST MAY BE SUBSTITUTED FOR THE WATER EXFILTRATION TEST, UPON APPROVAL OF THE ENGINEER.

3. MANHOLE LEAKAGE TEST SHALL NOT EXCEED FOUR GALLONS PER DAY PER UNIT. NO VISIBLE LEAKAGE ALLOWED.

4. SEWER PIPE LEAKAGE ALLOWABLE SHALL NOT EXCEED 150 GALLONS PER DAY PER INCH DIAMETER PER MILE IN A TWO HOUR TEST PERIOD FOR AN INFILTRATION TESTED. NO VISIBLE LEAKAGE SHALL BE ALLOWED.

5. ALL SEWER PIPE SHALL BE VIDEO RECORDED AND GIVEN TO CITY FOR REVIEW AND APPROVAL AT THE CONTRACTORS EXPENSE.

6. SEE BROWARD COUNTY AND CITY CONSTRUCTION STANDARDS & SPECIFICATIONS FOR ADDITIONAL TESTING REQUIREMENTS.

VIII. STORM DRAINAGE:

A. GENERAL:

1. DISTANCES AND LENGTHS SHOWN ON PLANS ARE REFERENCED TO THE CENTER OF STRUCTURES.

B. MATERIALS:

1. REINFORCED CONCRETE PIPE (R.C.P.) SHALL MEET THE REQUIREMENTS OF ASTM C-76, LATEST REVISION. RUBBER GASKETS OR OTHER MANUFACTURER SUPPLIED JOINT SEALER SHALL BE USED. FOR ADDITIONAL REQUIREMENTS SEE BROWARD COUNTY'S AND THE CITY'S STANDARDS AND SPECIFICATIONS.

2. ALL DRAINAGE CATCH BASINS AND STRUCTURES SHALL BE PRECAST CONCRETE AS MANUFACTURED BY U.S. PRECAST CORPORATION, UNLESS OTHERWISE NOTED ON THE PLANS. THE MINIMUM WALL AND SLAB THICKNESS SHALL BE 9 INCHES AND THE MINIMUM REINFORCING SHALL BE AS INDICATED ON THE STRUCTURE DETAIL. CONCRETE SHALL BE MINIMUM OF 4OOPSI AT 28 DAYS.

C. INSTALLATION

1. PIPE SHALL BE PLACED ON A MINIMUM OF 8" STABLE GRANULAR MATERIAL FREE OF ROCK FORMATION AND OTHER FOREIGN FORMATIONS, AND CONSTRUCTED TO A UNIFORM GRADE AND LINE.

2. BACKFILL MATERIAL SHALL BE WELL GRADED GRANULAR MATERIAL, WELL TAMPED IN LAYERS NOT TO EXCEED 6 INCHES TO A HEIGHT OF 12 INCHES ABOVE PIPE AS SHOWN ON THE PLANS.

3. PROVIDE A MINIMUM PROTECTIVE COVER OF 18 INCHES OVER STORM SEWER AND AVOID UNNECESSARY CROSSING BY HEAVY CONSTRUCTION VEHICLES DURING CONSTRUCTION.

4. THE CONTRACTOR SHALL NOTIFY THE CITY'S ENGINEERING DEPARTMENT AT LEAST 7 DAYS PRIOR TO THE START OF THE CONSTRUCTION AND INSPECTION.

IX. PAVING

A. GENERAL:

1. BROWARD COUNTY AND THE CITY'S CONSTRUCTION STANDARDS & SPECIFICATIONS SHALL GOVERN.

2. ALL MUCK AND YELDING MATERIAL WITHIN THE LIMIT OF CONSTRUCTION SHALL BE REMOVED AND REPLACED WITH CLEAN FILL MATERIAL WHICH SHALL BE COMPACTED AND SHAPED TO CONFORM TO THE REQUIRED SECTION. COMPACTED AREAS, AS SHOWN ON THE PLANS AND OR AS DETERMINED BY THE ENGINEER, SHALL BE COMPACTED TO NOT LESS THAN 98% OF MAXIMUM DENSITY AT OPTIMUM MOISTURE, AS DETERMINED BY AASHTO T-180, LATEST REVISION. AREAS TO BE STABILIZED, AS DETERMINED BY THE ENGINEER, SHALL HAVE A MINIMUM LBR-40.

3. ALL UNDERGROUND UTILITIES SHALL BE COMPLETED PRIOR TO CONSTRUCTION OF LIMEROCK BASE.

4. ALL EXISTING PAVEMENT, CUT OR DAMAGED BY CONSTRUCTION, SHALL BE PROPERLY RESTORED AT THE CONTRACTOR'S EXPENSE.

5. WHERE ANY PROPOSED PAVEMENT IS TO BE CONNECTED TO EXISTING PAVEMENT, THE EXISTING EDGE OF PAVEMENT SHALL BE SAW CUT.

B. MATERIALS:

1. BASE COURSE SHALL BE CRUSHED LIMEROCK WITH A MINIMUM OF 70% CARBONATES OF CALCIUM AND MAGNESIUM.

2. ASPHALT SURFACES SHALL BE TYPE S-III ASPHALTIC CONCRETE, UNLESS OTHERWISE SPECIFIED ON THE PLANS, AND SHALL BE A MINIMUM OF 1-1/2" THICK.

3. MINIMUM SIDEWALK CONSTRUCTION SHALL BE 4 INCH THICK CONCRETE, MINIMUM 3000psi COMPRESSIVE STRENGTH AT 28 DAYS. SAWCUT CONSTRUCTION JOINTS 5 FOOT o.c. WITHIN 48 HOURS OF PLACING, EXPANSION JOINTS SHALL BE 20 FOOT o.c. SEE BROWARD COUNTY'S AND THE CITY'S SECTION ON CONSTRUCTION STANDARDS & SPECIFICATIONS FOR FURTHER REQUIREMENTS.

4. CURBS AND GUTTERS: CONCRETE 3000psi COMPRESSIVE STRENGTH AT 28 DAYS. SAWCUT CONSTRUCTION JOINTS 10 FOOT o.c. WITHIN 48 HOURS OF PLACING.

5. REINFORCED CONCRETE SLABS SHALL BE CONSTRUCTED OF CLASS I CONCRETE WITH A MINIMUM STRENGTH OF 3,000 PSI AND SHALL BE REINFORCED WITH A 6" x 6" NO. 6 GAUGE WIRE MESH.

C. INSTALLATION:

1. SUBGRADE FOR PAVEMENT AREAS SHALL BE COMPACTED TO A MINIMUM OF 98% OF THE MAXIMUM DENSITY (AASHTO T-99(c)), AND SHALL HAVE A MINIMUM LBR 40.

2. BASE COURSE MATERIAL FOR PAVED AREAS SHALL BE A MINIMUM THICKNESS OF 6" AND SHALL BE CONSTRUCTED IN TWO FOUR-INCH LIFTS.

3. BASE COURSE MATERIAL FOR CURBS AND GUTTERS SHALL BE A MINIMUM THICKNESS OF 6 INCH.

4. BASE COURSE SHALL BE COMPACTED TO 98% OF THE MAXIMUM DENSITY AASHTO T-180 AND SHALL HAVE A MINIMUM LBR OF 100.

5. INSTALLATION OF THE WEARING SURFACE SHALL CONFORM WITH THE REQUIREMENTS OF THE D.O.T. STANDARD SPECIFICATIONS FOR TYPE S-III ASPHALTIC CONCRETE.

D. TESTING

1. THE FINISHED SURFACE OF THE BASE COURSE AND THAT OF THE WEARING SURFACE SHALL NOT VARY MORE THAN 1/4" FROM THE TEMPLATE. ANY IRREGULARITIES EXCEEDING THIS LIMIT SHALL BE CORRECTED.

2. DENSITY TESTS SHALL BE TAKEN BY AN INDEPENDENT TESTING LABORATORY CERTIFIED BY THE STATE OF FLORIDA, WHERE DIRECTED BY THE ENGINEER.

3. ALL TESTING COSTS (PAVING) SHALL BE PAID FOR BY THE CONTRACTOR.

4. DENSITY TESTS ON THE STABILIZED SUBGRADE SHALL BE SUPPLIED TO THE ENGINEER OF RECORD AND APPROVED BEFORE ANY LIMEROCK BASE IS CONSTRUCTED.

5. DENSITY TESTS AND AS-BUILTS ON THE FINISHED LIMEROCK BASE SHALL BE SUPPLIED TO THE ENGINEER OF RECORD, AND APPROVED BEFORE ANY ASPHALT PAVEMENT IS CONSTRUCTED.

X. DEWATERING

1. WHERE DEWATERING IS REQUIRED, THE CONTRACTOR IS RESPONSIBLE FOR DEWATERING IN SUCH A MANNER SO AS TO COMPLY WITH ANY AND ALL CITY, COUNTY, STATE AND FEDERAL DEWATERING REGULATIONS. CONTRACTOR MAY CONTACT THE BROWARD COUNTY DEPARTMENT OF PLANNING AND ENVIRONMENTAL PROTECTION AND THE FLORIDA DEPARTMENT OF ENVIRONMENTAL PROTETCION FOR FURTHER INFORMATION.

XI. PAVEMENT MARKING AND SIGNAGE

1. ALL PAVEMENT MARKINGS AND SIGNAGE SHALL BE IN ACCORDANCE WITH THE "MANUAL ON UNIFORM TRAFFIC CONTROL DEVICES FOR STREETS AND HIGHWAYS," LATEST EDITION; AND BROWARD COUNTY TRAFFIC ENGINEERING STANDARDS (CURRENT EDITION). STANDARDS & SPECIFICATIONS FOR PAVEMENT MARKING REQUIREMENTS.

XII. PROJECT CLOSEOUT

A. CLEANING UP:

1. DURING CONSTRUCTION, THE PROJECT SITE AND ALL ADJACENT AREAS SHALL BE MAINTAINED IN A NEAT AND CLEAN MANNER, AND UPON FINAL CLEAN-UP, THE PROJECT SITE SHALL BE LEFT CLEAR OF ALL SURPLUS MATERIAL OR TRASH. THE PAVED, PAVER BRICK, AND CONCRETE AREAS SHALL BE SWEPT BROOM CLEAN.

2. THE CONTRACTOR SHALL RESTORE OR REPLACE, WHEN AND AS DIRECTED, ANY PUBLIC OR PRIVATE PROPERTY DAMAGED BY HIS WORK, EQUIPMENT, OR EMPLOYEES, TO A CONDITION AT LEAST EQUAL TO THAT EXISTING IMMEDIATELY PRIOR TO THE BEGINNING OF OPERATIONS. TO THAT END, THE CONTRACTOR SHALL DO, AS REQUIRED, ALL NECESSARY HIGHWAY, DRIVEWAY, WALK AND LANDSCAPING WORK. SUITABLE MATERIALS AND METHODS SHALL BE USED FOR SUCH RESTORATION.

3. WHERE MATERIAL OR DEBRIS HAS WASHED OR FLOWED INTO OR HAS BEEN PLACED IN WATER COURSES, DITCHES, DRAINS, CATCH BASINS, OR ELSEWHERE AS A RESULT OF THE CONTRACTOR'S OPERATIONS, SUCH MATERIAL OR DEBRIS SHALL BE REMOVED AND SATISFACTORILY DISPOSED OF DURING THE PROGRESS OF THE WORK, AND THE AREA KEPT IN A CLEAN AND NEAT CONDITION.

B. ALL PROPERTY MONUMENTS OR PERMANENT REFERENCES, REMOVED OR DESTROYED BY THE CONTRACTOR DURING CONSTRUCTION SHALL BE RESTORED BY A STATE OF FLORIDA REGISTERED LAND SURVEYOR AT THE CONTRACTOR'S EXPENSE.

C. ALL UNPAVED SURFACES DISTURBED AS A RESULT OF CONSTRUCTION ACTIVITIES SHALL BE RESTORED TO A CONDITION EQUAL TO OR BETTER THAN THAT WHICH EXISTED BEFORE THE CONSTRUCTION.

XIII. ENGINEER'S AS BUILT REQUIREMENTS

1. DURING THE DAILY PROGRESS OF THE JOB, THE CONTRACTOR SHALL RECORD ON THEIR SET OF CONSTRUCTION DRAWINGS THE EXACT LOCATION, LENGTH, MATERIAL AND ELEVATION OF ANY FACILITY NOT BUILT EXACTLY ACCORDING TO PLANS.

2. AS BUILTS OF WATER LINES SHALL INCLUDE THE FOLLOWING
   A. TOP OF PIPE ELEVATIONS EVERY 100 LINEAR FEET
   B. LOCATIONS AND ELEVATIONS OF ALL FITTINGS INCLUDING BENDS, TEES, GATE VALVES, DOUBLE DETECTOR CHECK VALVES, FIRE HYDRANTS, ETC.
   C. ALL TIE INS TO EXISTING LINES SHALL BE AS BUILT
   D. THE TERMINATION OF ALL WATER SERVICES SHALL BE SHOWN

3. AS BUILTS OF ALL THE GRAVITY SANITARY SEWER LINES SHALL INCLUDE THE FOLLOWING INFORMATION
   A. RIMS, INVERTS, AND LENGTH OF PIPING BETWEEN STRUCTURES, AS WELL AS PIPE SLOPES.
   B. LOCATION OF ALL STUB ENDS OF ALL SEWER LATERALS INVERT ELEVATIONS AND LOCATION OF ALL CLEAN OUTS
   C. LIFT STATION AS BUILTS SHALL CONSIST OF THE TOP OF WET WELL ELEVATION, INVERT ELEVATIONS OF THE INCOMING LINE, BOTTOM OF THE WET WELL AND AS BUILTS OF THE COMPOUND AREA

4. FORCE MAIN AS BUILTS SHALL BE PREPARED THE SAME AS THE WATER MAIN AS

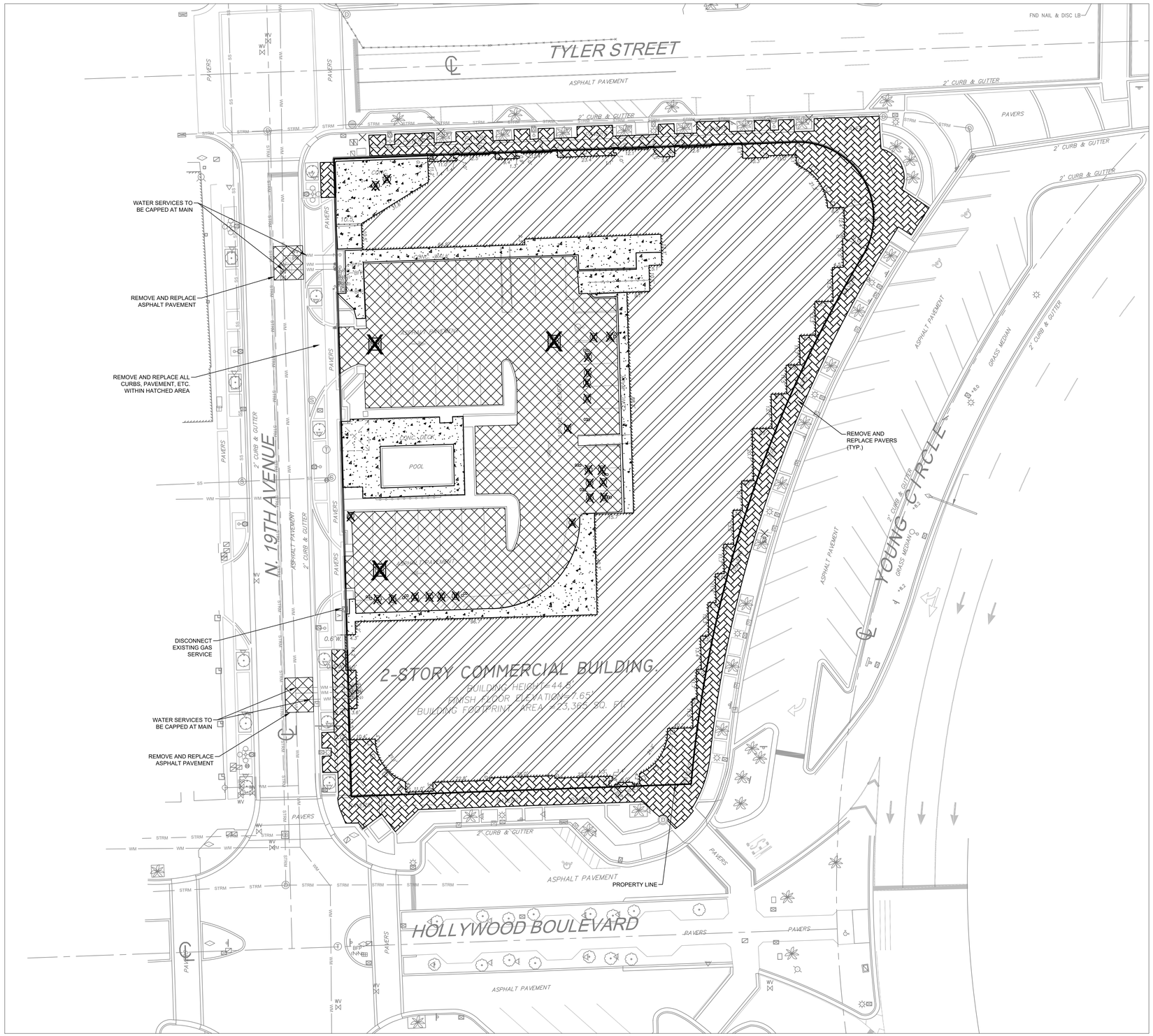

0 20' 40'

DEMOLITION LEGEND:

- X — STRUCTURAL REMOVAL
- ASPHALT PAVEMENT SECTION REMOVAL & DISPOSAL
- CONCRETE PAVEMENT REMOVAL & DISPOSAL
- REMOVE AND DISPOSE OF BUILDING STRUCTURE PER ARCHITECTURAL AND STRUCTURAL DEMOLITION PLANS
- PAVERS SIDEWALK REMOVAL & DISPOSAL
- LIMITS OF REMOVAL
- PIPE REMOVAL

NOTES:

1. THE CONTRACTOR SHALL INSTALL EROSION CONTROL MEASURES PRIOR TO STARTING DEMOLITION.

2. THE CONTRACTOR SHALL NOTIFY THE CITY PRIOR TO START OF DEMOLITION.

3. REFER TO TREE DISPOSITION PLAN FOR TREES THAT ARE TO BE RELOCATED OR REMOVED, OR TO REMAIN.

4. ANY EXCAVATED MATERIAL OR DEMOLITION DEBRIS SHALL BE STOCKPILED PROPERLY IN ORDER TO NOT CREATE ANY RAIN WATER RUN-OFF FLOOD DAMAGE TO THE PROPOSED STRUCTURE OR ANY SURROUNDING PROPERTIES.

5. ALL EROSION AND SILTATION CONTROL METHODS SHALL BE IMPLEMENTED PRIOR TO THE START OF THE DEMOLITION AND MAINTAINED UNTIL CONSTRUCTION IS COMPLETED.

6. IF WIND EROSION BECOMES SIGNIFICANT DURING CONSTRUCTION, THE CONTRACTOR SHALL STABILIZE THE AFFECTED AREA USING SPRINKLING, IRRIGATION OR OTHER ACCEPTABLE METHODS.

7. DEMOLITION INCLUDES REMOVAL FROM SITE AND PROPER DISPOSAL.

8. PHASING OF DEMOLITION SHALL BE COORDINATED WITH ENGINEER, CITY, AND PERMITTING AGENCIES TO ENSURE CONTINUOUS OPERATIONS AND COMPLIANCE WITH PERMIT REQUIREMENTS.

9. MAINTENANCE OF TRAFFIC TO MEET ALL M.U.T.C.D. STANDARDS WHERE APPLICABLE.

10. FURNISH AND INSTALL TEMPORARY CONSTRUCTION CHAIN LINK FENCE WITH WINDSCREEN TO PROTECT DEMOLITION SITE AREA.

11. CONTRACTOR RESPONSIBLE FOR OBTAINING APPLICABLE PERMITS AND PROPER COORDINATION PRIOR TO DEMOLITION.

12. PROPER CARE SHALL BE GIVEN TO PROTECT EXISTING FEATURES TO REMAIN. DAMAGED UTILITIES AND STRUCTURES SHALL BE REPAIRED TO ORIGINAL CONDITION.

13. EXISTING SIGNS WITHIN DEMOLITION LIMITS SHALL BE REMOVED AND DISPOSED OF.

14. CONTRACTOR SHALL REMOVE AND DISPOSE OF ALL EXISTING ITEMS REQUIRED TO CONSTRUCT PROPOSED PROJECT INCLUDING BUT NOT LIMITED TO ASPHALT PAVEMENT SECTION, CONCRETE PAVEMENT SECTION, CURBING, LIGHTING, SIGNAGE, UTILITIES OF ALL TYPES, CONDUITS, , TRANSFORMERS, ETC... THE CONTRACTOR SHALL PERFORM THIS DEMOLITION AND DISPOSAL WITH CARE AS TO NOT INTERRUPT OR DAMAGE ANY UTILITY SERVICES TO THE EXISTING BUILDING OR SITE LIGHTING TO REMAIN IN OPERATION THROUGHOUT THE DURATION OF CONSTRUCTION. DEMOLITION OF EXISTING LIGHTING AND ELECTRICAL SHALL BE COORDINATED BETWEEN THE CONTRACTOR, THE ELECTRICAL CONSULTING ENGINEER(S) OF RECORD, AND THE FLORIDA POWER AND LIGHT COMPANY.

SPECIAL DEMOLITION NOTES:
1. PHYSICAL SEPARATION BETWEEN THE BUILDING AND THE WATER AND SEWER SERVICE LINES IS REQUIRED PRIOR TO COMMENCEMENT OF BUILDING DEMOLITION. INSPECTIONS TO BE SCHEDULED ACCORDINGLY WITH CITY.

2. ALL WATER SERVICES BEING REMOVED MUST BE CAPPED AT MAIN AND ALL EFFECTED PAVEMENT AND SOD MUST BE RESTORED.

3. DEMOLITION CONTRACTOR MUST USE BEST MANAGEMENT PRACTICES DURING AND AFTER THE DEMOLITION TO PREVENT SEDIMENT AND EROSION RUNOFF FROM PROPERTY DURING AND AFTER CONSTRUCTION.

4. WHERE PORTIONS OF THE EXISTING SANITARY SEWER SERVICES ARE REMOVED THE PORTION OF THE SERVICE TO REMAIN SHALL BE CAPPED AT PROPERTY LINE UNTIL THE SERVICE IS EXTENDED PER THE THE PROPOSED PLAN FOR WATER AND SEWER FOR THIS PROJECT.

SPECIAL FIRE NOTES:

1. ALL CONSTRUCTION, RENOVATION, AND DEMOLITION SHALL COMPLY WITH NFPA 241.

2. ACCESS AND EXIT POINTS ARE TO BE CLEARLY IDENTIFIED AND MAINTAINED THROUGHOUT DURATION OF CONSTRUCTION.

3. DURING CONSTRUCTION TRASH AND DEBRIS IS TO BE REMOVED FROM THE SITE DAILY OR MORE OFTEN TO REDUCE ACCUMULATION OF POTENTIAL LIFE AND FIRE SAFETY HAZARDS.

ALL ELEVATIONS SHOWN ARE IN NAVD 1988 DATUM

DATUM CONVERSION
NGVD 1929 = (NAVD 1988 + 1.51')

CHAD E. EDWARDS, STATE OF FLORIDA
PROFESSIONAL ENGINEER, LICENSE NO. 59306
THIS ITEM HAS BEEN DIGITALLY SIGNED AND SEALED BY CHAD E. EDWARDS ON THE DATE INDICATED HERE.
PRINTED COPIES OF THIS DOCUMENT ARE NOT CONSIDERED SIGNED AND SEALED AND THE SIGNATURE MUST BE VERIFIED ON ANY ELECTRONIC COPIES

DATE:	03/17/23
SCALE:	1"=20'
DESIGN BY:	LZG
DRAWN BY:	LZG
CHECKED BY:	CEE
APPROVED BY:	CEE

BY:	DESCRIPTION:	DATE:

CRAVEN • THOMPSON AND ASSOCIATES, INC.
ENGINEERS • PLANNERS • SURVEYORS
3563 N.W. 53RD STREET, FORT LAUDERDALE, FLORIDA 33309
FAX: (954) 739-6409 TEL: (954) 739-6400
FLORIDA LICENSED ENGINEERING, SURVEYING & MAPPING BUSINESS No. 271
FLORIDA LICENSED LANDSCAPE ARCHITECTURE BUSINESS No. C000314

MATERIAL SHOWN HEREON IS THE PROPERTY OF CRAVEN, THOMPSON & ASSOCIATES, INC. AND SHALL NOT BE REPRODUCED IN WHOLE OR IN PART WITHOUT WRITTEN PERMISSION OF CRAVEN•THOMPSON & ASSOCIATES, INC. ©COPYRIGHT

SOLESTE LA PIAZZA
HOLLYWOOD, FLORIDA

PREPARED FOR:
THE ESTATES COMPANIES

DEMOLITION PLAN

Chad E. Edwards
Florida P.E. No. 59306

22-0064-001-01

C-3

SHEET 3 OF 17

R:\Engineering\2022\22-0064-001-01 La Piazza\Drawings\22-0064 DEMO.dwg [C-3] Mar 17, 2023 4:00pm RBURKERT

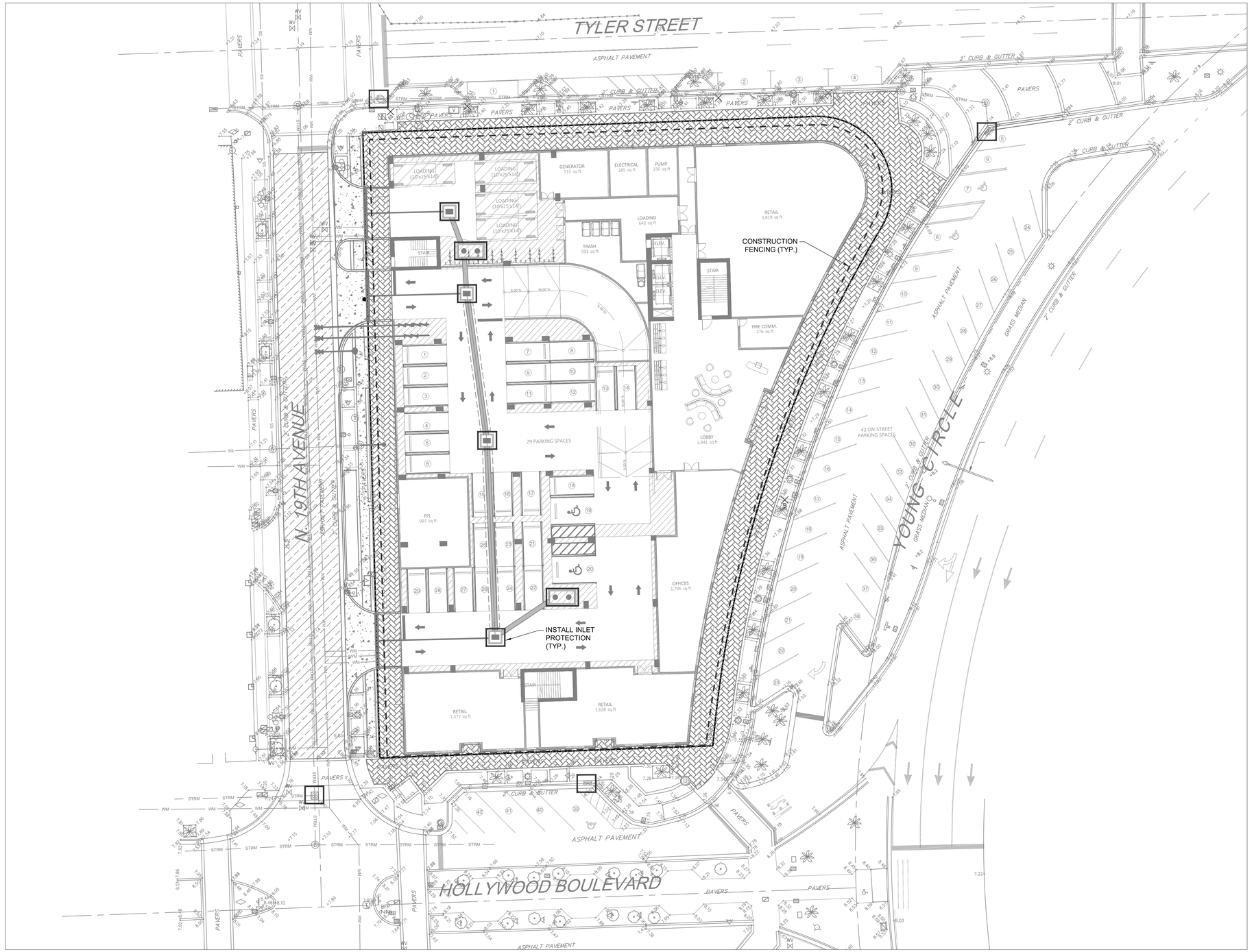

0 20' 40'

PROPOSED EROSION CONTROL LEGEND

- PROPOSED INLET PROTECTION
- TEMPORARY 6 FT. CHAIN LINK FENCE WITH WIND SCREEN ALONG WITH SILT FENCE.
- TEMPORARY CONSTRICTION ENTRANCE AND WASH DOWN AREA

NOTES:

1.) CONTRACTOR SHALL ASSUME ANY AND ALL RESPONSIBILITIES FOR ANY WATER CONTROL VIOLATIONS RESULTING FROM FAILURE TO ELIMINATE AND/OR CONTROL TURBID RUNOFF FROM LEAVING THE SITE AS ISSUED BY ANY AGENCY HAVING JURISDICTION.

2.) CONTRACTOR SHALL PROVIDE TEMPORARY DEWATERING AREA(S) PRIOR TO ANY EXCAVATION FOR PIPE INSTALLATION. DEWATERING AREA(S) SHALL BE PROTECTED WITH SILT SCREENS. ALL DEWATERING OPERATIONS SHALL DISCHARGE INTO TEMPORARY DEWATERING AREA(S) AND NO DIRECT DISCHARGE INTO THE EXISTING OR NEW DITCHES, STORM DRAINS, AND/OR PUBLIC RIGHT OF WAY WILL BE ALLOWED.

3.) CONTRACTOR SHALL MAINTAIN A POLLUTION PREVENTION CONTROL LOG AND CONDUCT WEEKLY INSPECTIONS AND WITHIN 24 HOURS OF A 0.25" STORM EVENT.

4.) CONTRACTOR TO EMPLOY BEST MANAGEMENT PRACTICES THROUGHOUT CONSTRUCTION IN ORDER TO ENSURE POLLUTION PREVENTION. CONTRACTOR TO COMPLY WITH ALL LOCAL, STATE, AND OTHER LOCAL GOVERNMENTAL ENVIRONMENTAL REGULATIONS THROUGHOUT CONSTRUCTION.

5.) DURING CONSTRUCTION, ALL CATCH BASINS TO BE EQUIPPED WITH FILTER FABRIC AND HAY BALES OVER GRATES.

6.) ALL AREAS DISTURBED DURING CONSTRUCTION SHALL BE STABILIZED WITHIN A RESONABLE PERIOD OF TIME TO ASSURE MINIMUM EROSION OF SOILS.

7.) NO LAND CLEARING OR GRADING SHALL BEGIN UNTIL ALL EROSON CONTROL MEASURES HAVE BEEN INSTALLED.

8.) ADDITIONAL EROSION AND SEDIMENT CONTROL MEASURES SHALL BE INSTALLED IF DEEMED NECESSARY. ADDITIONAL CONTROL MEAUSURES SHALL BE INSTALLED AT CONTRACTORS EXPENSE.

9.) ALL EXISTING STORM DRAINAGE PIPING AND STRUCTURES SHOWN ON THIS PLAN TO BE CLEANED AND TV.

ALL ELEVATIONS SHOWN ARE IN NAVD 1988 DATUM

DATUM CONVERSION
NGVD 1929 = (NAVD 1988 + 1.51')

CHAD E. EDWARDS, STATE OF FLORIDA
PROFESSIONAL ENGINEER, LICENSE NO. 59306
THIS ITEM HAS BEEN DIGITALLY SIGNED AND SEALED BY CHAD E. EDWARDS ON THE DATE INDICATED HERE.
PRINTED COPIES OF THIS DOCUMENT ARE NOT CONSIDERED SIGNED AND SEALED AND THE SIGNATURE MUST BE VERIFIED ON ANY ELECTRONIC COPIES

DATE:	03/17/23
SCALE:	1"=20'
DESIGN BY:	LZG
DRAWN BY:	LZG
CHECKED BY:	CEE
APPROVED BY:	CEE

BY:	DATE:	DESCRIPTION:

CRAVEN • THOMPSON AND ASSOCIATES, INC.
ENGINEERS • PLANNERS • SURVEYORS
3563 N.W. 53RD STREET, FORT LAUDERDALE, FLORIDA 33309
FAX: (954) 739-6409 TEL: (954) 739-6400
FLORIDA LICENSED ENGINEERING, SURVEYING & MAPPING BUSINESS No. 271
FLORIDA LICENSED LANDSCAPE ARCHITECTURE BUSINESS No. C000314

MATERIAL SHOWN HEREON IS THE PROPERTY OF CRAVEN, THOMPSON & ASSOCIATES, INC. AND SHALL NOT BE REPRODUCED IN WHOLE OR IN PART WITHOUT WRITTEN PERMISSION OF CRAVEN•THOMPSON & ASSOCIATES, INC. COPYRIGHT © 2023

SOLESTE LA PIAZZA
HOLLYWOOD, FLORIDA

PREPARED FOR:
THE ESTATES COMPANIES

EROSION CONTROL PLAN

Chad E. Edwards
Florida P.E. No. 59306

22-0064-001-01

C-4

SHEET 4 OF 17

R: \Engineering\2022\22-0064-001-01 La Piazza\Drawings\22-0064 ECP.dwg [C-4] Mar 17, 2023 4:01pm RBURKERT

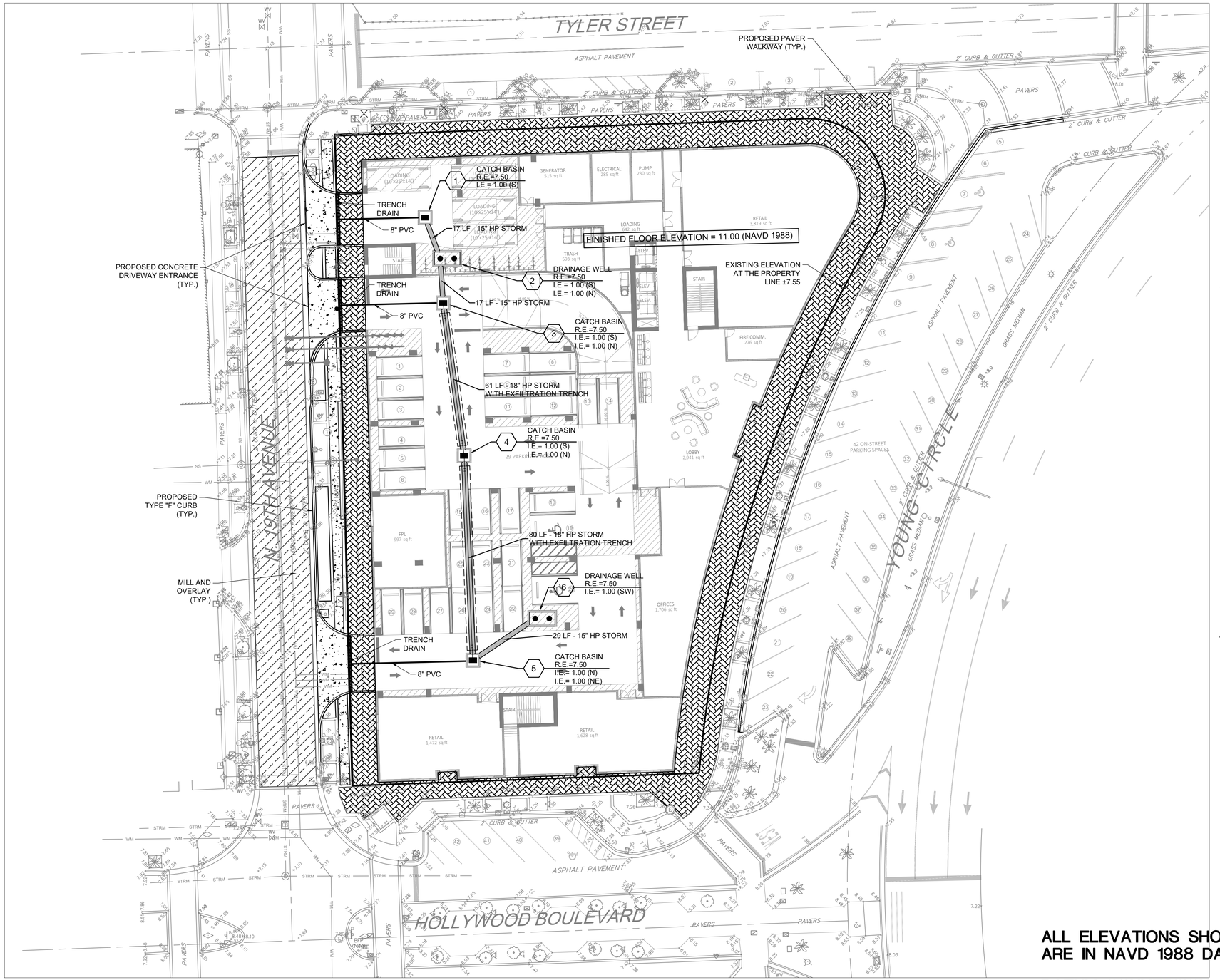

0 20' 40'

NOTES:

1. ALL EXISTING DRAINAGE STRUCTURES AND PIPES SHALL BE CLEANED AND REPAIRED AS NECESSARY, PRIOR TO CONNECTING THEM WITH PROPOSED DRAINAGE FACILITIES.
2. THE CONTRACTOR IS RESPONSIBLE FOR PREPARING AND IMPLEMENTING A STORMWATER POLLUTION PREVENTION PLAN (SWPPP), INCLUDING BUT NOT LIMITED TO TURBIDITY BARRIERS, SILT FENCE, INLET PROTECTION, WATER MONITORING, ETC.
3. RAINWATER LEADER CLEANOUTS ARE SHOWN UP TO A POINT THAT IS 5' FROM THE EXTERIOR BUILDING WALL, FOR CONTINUATION UPSTREAM OF THIS POINT REFER TO THE ARCHITECTURAL PLANS.

ABBREVIATIONS

B.C.R.	BROWARD COUNTY RECORDS
BH	BUD HEIGHT
(C)	CALCULATED FROM PLAT
CATV	CABLE TELEVISION
C.B.	CATCH BASIN
C&G	CURB AND GUTTER
CONC.	CONCRETE
C.L.F.	CHAIN LINK FENCE
C.M.P.	CORREGATED METAL PIPE
D.C.R.	DADE COUNTY RECORDS
ELEV.	ELEVATION
IRR	IRRIGATION
I.E.	INVERT ELEVATION
LB	LICENSED BUSINESS
MH	MANHOLE
OHW	OVERHEAD WIRES
O.R.B.	OFFICIAL RECORDS BOOK
P.B.	PLAT BOOK
PG.	PAGE
P.R.M.	4"x4" CONCRETE MONUMENT W/ LB2271 DISC
R.C.P.	REINFORCED CONCRETE PIPE
R.E.	RIM ELEVATION
R/W	RIGHT-OF-WAY
(TYP.)	TYPICAL

EXISTING LEGEND

- ANCHOR
- BLOW-OFF VALVE
- CATCH BASIN
- CONCRETE LIGHT POLE
- CONCRETE POST
- CONCRETE POWER POLE
- CURB INLET
- ELECTRICAL OUTLET
- ELECTRICAL PANEL
- ELECTRICAL PULL BOX
- ELECTRICAL MANHOLE
- GAS MARKER
- HEADWALL
- TRAFFIC POLE
- TRAFFIC PULL BOX
- TRANSFORMER PAD
- WATER BLOW-OFF
- WATER VALVE
- WOOD POWER POLE
- METAL LIGHT POLE
- MONITORING WELL
- PIPE
- PARKING LIGHT 2 SQUARE
- SANITARY MANHOLE
- SIGN
- SPOT-FLOOD LIGHT
- SANITARY SEWER CLEAN OUT
- STORM MANHOLE
- TELEPHONE MANHOLE
- TELEPHONE PEDESTAL
- TELEPHONE PULL BOX
- OVER HEAD WIRES
- TOP OF BANK
- TOE OF SLOPE
- WATER MAIN
- GUARDRAIL
- NON-VEHICULAR ACCESS LINE

PROPOSED DRAINAGE LEGEND

- INDICATES MANHOLE
- INDICATES CATCH BASIN
- INDICATES YARD DRAIN
- C.O. INDICATES CLEANOUT
- X-X INDICATES STORM DRAIN STRUCTURE TYPE
- R.E. or G.E.= INDICATES STORM DRAIN RIM or GRATE ELEVATION
- I.E.= INDICATES STORM DRAIN INVERT ELEVATION
- 0 INDICATES STORM DRAIN STRUCTURE NUMBER
- PRB INDICATES POLLUTION RETARDANT BAFFLE
- 5.35 INDICATES PAVEMENT SPOT ELEVATION
- 5.35 INDICATES CONCRETE SPOT ELEVATION
- FLOW ARROW
- F.F.EL.= INDICATES FINISH FLOOR ELEVATION
- L.F. INDICATES LINEAR FOOTAGE OF PIPE
- PROPOSED STORM SEWER
- PROPOSED EXFILTRATION TRENCH
- INDICATES NEW ASPHALT PAVEMENT(REFER TO PAVEMENT INSTALLATION DETAIL)
- MILL AND OVERLAY ASPHALT
- INDICATES CONCRETE (REFER TO DETAIL)
- SIDEWALK PAVERS

ALL ELEVATIONS SHOWN ARE IN NAVD 1988 DATUM

DATUM CONVERSION
NGVD 1929 = (NAVD 1988 + 1.51')

CHAD E. EDWARDS, STATE OF FLORIDA
PROFESSIONAL ENGINEER, LICENSE NO. 59306
THIS ITEM HAS BEEN DIGITALLY SIGNED AND SEALED BY CHAD E. EDWARDS ON THE DATE INDICATED HERE.
PRINTED COPIES OF THIS DOCUMENT ARE NOT CONSIDERED SIGNED AND SEALED AND THE SIGNATURE MUST BE VERIFIED ON ANY ELECTRONIC COPIES

DATE:	03/17/23
SCALE:	1"=20'
DESIGN BY:	LZG
DRAWN BY:	LZG
CHECKED BY:	CEE
APPROVED BY:	CEE

BY:	DATE:	DESCRIPTION:

CRAVEN • THOMPSON AND ASSOCIATES, INC.
ENGINEERS • PLANNERS • SURVEYORS
3563 N.W. 53RD STREET, FORT LAUDERDALE, FLORIDA 33309
FAX: (954) 739-6409 TEL.: (954) 739-6400
FLORIDA LICENSED ENGINEERING, SURVEYING & MAPPING BUSINESS No. 271
FLORIDA LICENSED LANDSCAPE ARCHITECTURE BUSINESS No. C000314

MATERIAL SHOWN HEREON IS THE PROPERTY OF CRAVEN, THOMPSON & ASSOCIATES, INC. AND SHALL NOT BE REPRODUCED IN WHOLE OR IN PART WITHOUT WRITTEN PERMISSION OF CRAVEN•THOMPSON & ASSOCIATES, INC.

SOLESTE LA PIAZZA
HOLLYWOOD, FLORIDA

PREPARED FOR:
THE ESTATES COMPANIES

PAVING, GRADING, & DRAINAGE PLAN

Chad E. Edwards
Florida P.E. No. 59306

22-0064-001-01

C-5

SHEET 5 OF 17

R:\Engineering\2022\22-0064-001-01 La Piazza\Drawings\22-0064 PGD.dwg [C-5] Mar 17, 2023 4:01pm RBURKERT

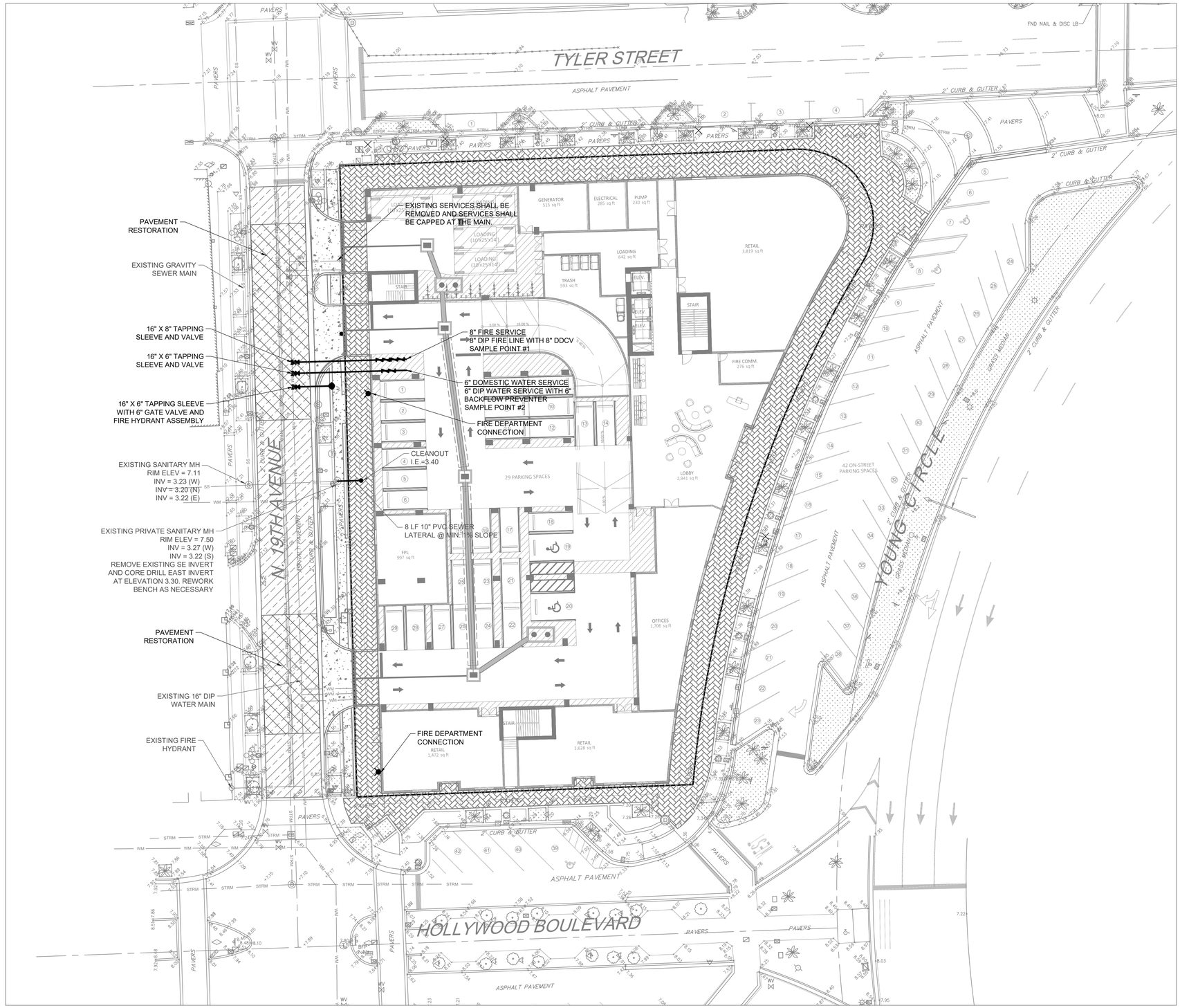

PROPOSED WATER AND SEWER LEGEND:

- FIRE HYDRANT ASSEMBLY
- GATE VALVE
- WATER METER
- SAMPLING POINT
- REDUCER
- BACKFLOW PREVENTER
- SIAMESE FIRE CONNECTION
- PLUG
- PAVEMENT RESTORATION
- SOD/LANDSCAPE RESTORATION
- BOT. = X.XX / TOP = X.XX — CONFLICT CALLOUT
- (1) — SANITARY STRUCTURE NUMBER
- R.E.= — RIM ELEVATION
- I.E.= — INVERT ELEVATION
- SANITARY SEWER MANHOLE
- CLEANOUT
- SANITARY SEWER PIPE FLOW DIRECTION
- SANITARY (SINGLE) SERVICE
- SANITARY (DOUBLE) SERVICE

NOTES:

1. CONTRACTOR TO FIELD VERIFY LOCATION, DEPTH, AND SIZE OF ALL EXISTING UTILITIES PRIOR TO BEGINNING CONSTRUCTION.
2. ALL WATER MAIN PIPES 4" AND LARGER SHALL BE CLASS 52 MECHANICAL JOINT AND CEMENT MORTAR LINED. ALL D.I.P. SHALL BE POLY WRAPPED IN ACCORDANCE WITH C105/A21.5-05.
3. ALL WATER MAIN PIPE, INCLUDING FITTINGS, SHALL BE COLOR CODED OR MARKED BLUE AS A PREDOMINANT COLOR TO DIFFERENTIATE DRINKING WATER FROM RECLAIMED OR OTHER WATER. ALL FITTINGS AND PIPING FLANGED BOLTS,NUTS, AND WASHERS SHALL BE MADE OF A-316 STAINLESS STEEL.
4. ALL PROPOSED BACKFLOW DEVICES SHALL BE LEAD FREE.
5. THE BACKFLOW PREVENTERS/DDCV ARE LOCATED AT OR BEHIND THE FACADE LINE OR THE BUILDING ON THE APPROVED PLANS AND MUST BE LOCATED AT OR BEHIND THE FRONT OF THE BUILDING ON THE APPROVED PERMITS PLANS, AND CANNOT BE LOCATED IN FRONT OF THE BUILDING.
6. ANY EXISTING UNUTILIZED WATER AND/OR SEWER CONNECTION MUST BE CUT AND CAPPED/PLUGGED AT THE MAIN.
7. ALL PROPOSED FIRE LINES, I.E., MAINS, FIRE SERVICES, "SIAMESE" CONNECTION LINES ETC. TO BE DESIGNED, PERMITTED, & INSTALLED BY A STATE LICENSED FIRE LINE CONTRACTOR HOLDING A CLASS I, II, OR V LICENSE PER F.S. 633.102.
8. ALL FIRE LINES TO BE INSPECTED BY CERTIFIED FIRE LINE INSPECTORS.
9. STATE LICENSED FIRE LINE CONTRACTOR, UPON COMPLETION OF REQUIRED TESTING, SHALL ISSUE A "LICENSED UNDERGROUND TEST CERTIFICATE" PRIOR TO ACCEPTANCE FOR PLACING FIRE LINE INTO SERVICE.

DUCTILE IRON PIPE FITTINGS PROTECTION

1. ENCASEMENT SHALL BE FURNISHED, MARKED AND INSTALLED IN ACCORDANCE WITH C105/A21.5-05 POLYETHYLENE ENCASEMENT OF DUCTILE-IRON PIPE SYSTEMS LATEST REVISION, FOR ALL CASTINGS, FITTINGS, VALVES, AND COUPLINGS FOR THE ENTIRE PORTION OF DIRECT-BURIED DUCTILE IRON APPURTENANCE. THE POLYETHYLENE ENCASEMENT SHALL PREVENT CONTACT BETWEEN THE PIPE, GROUND WATER, AND THE SURROUNDING BACKFILL AND BEDDING MATERIAL.
2. TUBE WITH APPROVED POLYETHYLENE ADHESIVE TAPE.
3. MATERIAL: LINEAR LOW DENSITY POLYETHYLENE (P.E.) FILM OF 0.008-INCH (0.20-MM) MINIMUM THICKNESS, OR HIGH-DENSITY, CROSS LAMINATED P.E. FILM OF 0.004-INCH (0.10-MM) MINIMUM THICKNESS.

ALL ELEVATIONS SHOWN ARE IN NAVD 1988 DATUM

DATUM CONVERSION NGVD 1929 = (NAVD 1988 + 1.51')

CHAD E. EDWARDS, STATE OF FLORIDA PROFESSIONAL ENGINEER, LICENSE NO. 59306 THIS ITEM HAS BEEN DIGITALLY SIGNED AND SEALED BY CHAD E. EDWARDS ON THE DATE INDICATED HERE. PRINTED COPIES OF THIS DOCUMENT ARE NOT CONSIDERED SIGNED AND SEALED AND THE SIGNATURE MUST BE VERIFIED ON ANY ELECTRONIC COPIES

DATE:	03/17/23
SCALE:	1"=20'
DESIGN BY:	LZG
DRAWN BY:	LZG
CHECKED BY:	CEE
APPROVED BY:	CEE

BY:	DESCRIPTION:	DATE:

CRAVEN • THOMPSON AND ASSOCIATES, INC.
ENGINEERS • PLANNERS • SURVEYORS
3563 N.W. 53RD STREET, FORT LAUDERDALE, FLORIDA 33309
FAX: (954) 739-6409 TEL.: (954) 739-6400
FLORIDA LICENSED ENGINEERING, SURVEYING & MAPPING BUSINESS No. 271
FLORIDA LICENSED LANDSCAPE ARCHITECTURE BUSINESS No. C000314

MATERIAL SHOWN HEREON IS THE PROPERTY OF CRAVEN, THOMPSON & ASSOCIATES, INC. AND SHALL NOT BE REPRODUCED IN WHOLE OR IN PART WITHOUT WRITTEN PERMISSION OF CRAVEN•THOMPSON & ASSOCIATES, INC. ©2023

SOLESTE LA PIAZZA
HOLLYWOOD, FLORIDA

PREPARED FOR:
THE ESTATES COMPANIES

WATER AND SEWER PLAN

Chad E. Edwards
Florida P.E. No. 59306

22-0064-001-01

C-6

SHEET 6 OF 17

R: \Engineering\2022\22-0064-001-01 La Piazza\Drawings\22-0064 WS.dwg [C-6] Mar 17, 2023 4:01pm RBURKERT

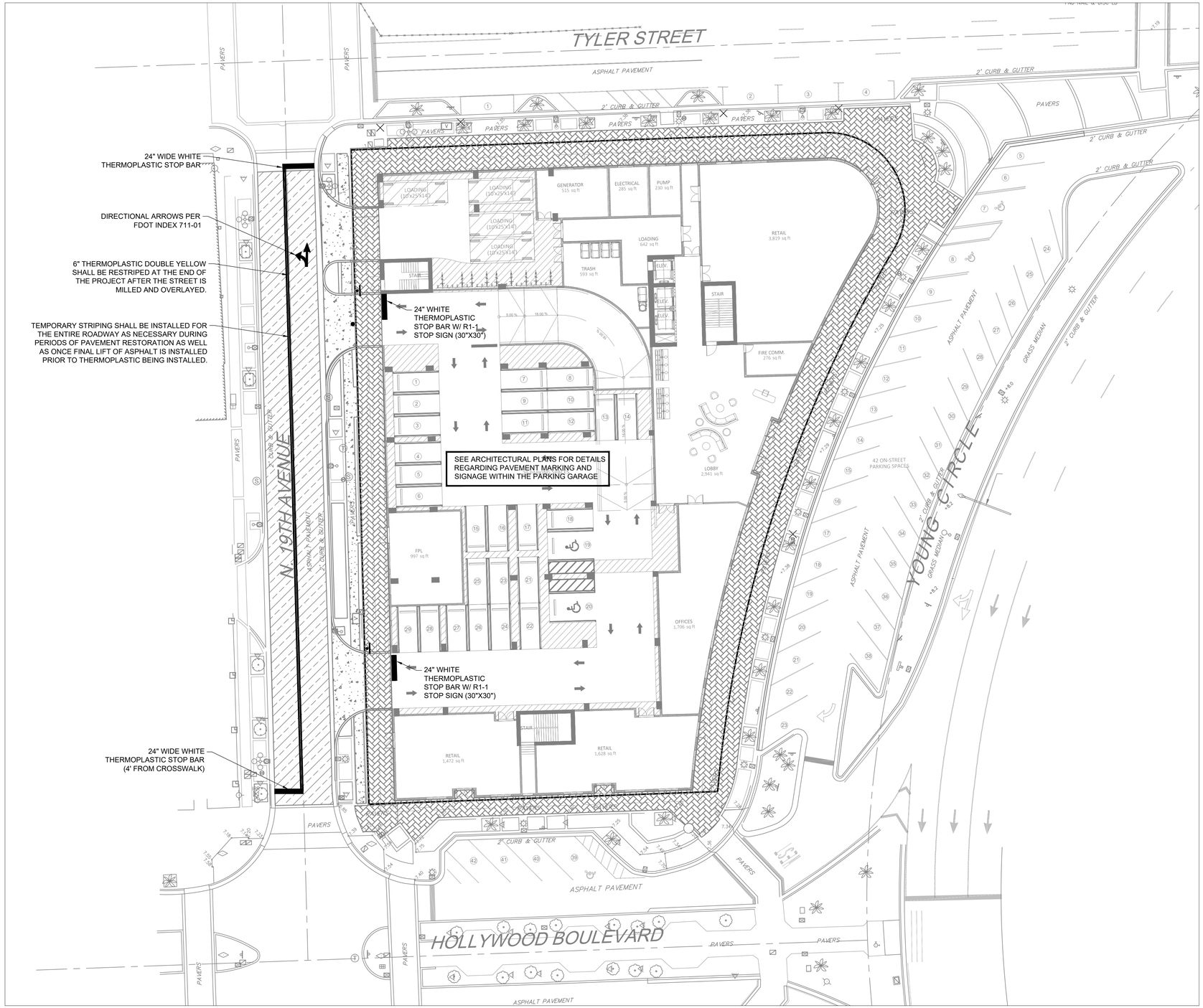

0 20' 40'

NOTES:

1. ALL SIGNS TO BE REMOVED AND REPLACED AT THE END OF THE PROJECT TO CURRENT BCTED STANDARDS. CONTRACTOR TO MAINTAIN ALL SIGNS DURING CONSTRUCTION, UNLESS OTHERWISE NOTED.
2. ALL EXISTING PAVEMENT MARKINGS AND SIGNING DISTURBED DUE TO PROPOSED CONSTRUCTION ACTIVITIES SHALL BE REPLACED TO CURRENT BCTED STANDARDS. SEE PAVEMENT MARKING AND SIGN DETAILS AND STOP SIGN AND STREET IDENTIFICATION AND ASSEMBLY DETAILS ON SHEET C-7A.
3. ALL PAVEMENT MARKINGS AND SIGNAGE SHALL BE IN ACCORDANCE WITH THE "MANUAL ON UNIFORM TRAFFIC CONTROL DEVICES FOR STREETS AND HIGHWAYS", LATEST EDITION, AND BROWARD COUNTY TRAFFIC ENGINEERING DIVISION STANDARDS (LATEST EDITION.)
4. ALL PAVEMENT MARKINGS SHALL BE ALKYD BASED THERMOPLASTIC AND FULLY RETROREFLECTORIZED UNLESS NOTED OTHERWISE.
5. ALL PAVEMENT MARKING REFLECTIVITY SHALL BE 250 MILLICANDELLAS FOR WHITE AND 175 MILLICANDELLAS FOR YELLOW.
6. FDOT APPROVED SEALER SHALL BE USED WHEN APPLYING MARKINGS ON CONCRETE.
7. ALL STOP SIGNS SHALL BE 30"x30" DIAMOND GRADE TYPE XI REFLECTIVE MATERIAL.
8. RAISED PAVEMENT MARKERS (RPM'S) SHALL BE CLASS "B" OR EQUAL, APPLIED WITH EPOXY OR BITUMINOUS ADHESIVE.
9. EXISTING MARKINGS SHALL BE REMOVED BY WATER BLASTING OR SANDBLASTING ONLY.
10. ALL STOP BARS TO BE 4' BEHIND CROSSWALK OR SIDEWALK.
11. ALL EXISTING SIGNAL LOOPS AND OTHER APPURTENANCES DISTURBED DURING CONSTRUCTION SHALL BE REPLACED BY THE CONTRACTOR AND COORDINATED WITH B.C.H.C.E.D.

ALL ELEVATIONS SHOWN ARE IN NAVD 1988 DATUM

DATUM CONVERSION NGVD 1929 = (NAVD 1988 + 1.51')

CHAD E. EDWARDS, STATE OF FLORIDA
PROFESSIONAL ENGINEER, LICENSE NO. 59306
THIS ITEM HAS BEEN DIGITALLY SIGNED AND SEALED BY CHAD E. EDWARDS ON THE DATE INDICATED HERE.
PRINTED COPIES OF THIS DOCUMENT ARE NOT CONSIDERED SIGNED AND SEALED AND THE SIGNATURE MUST BE VERIFIED ON ANY ELECTRONIC COPIES

DATE:	03/17/23
SCALE:	1"=20'
DESIGN BY:	LZG
DRAWN BY:	LZG
CHECKED BY:	CEE
APPROVED BY:	CEE

BY:	DESCRIPTION:	DATE:

CRAVEN • THOMPSON AND ASSOCIATES, INC.
ENGINEERS • PLANNERS • SURVEYORS
3563 N.W. 53RD STREET, FORT LAUDERDALE, FLORIDA 33309
FAX: (954) 739-6409 TEL: (954) 739-6400
FLORIDA LICENSED ENGINEERING, SURVEYING & MAPPING BUSINESS No. 271
FLORIDA LICENSED LANDSCAPE ARCHITECTURE BUSINESS No. C000314

MATERIAL SHOWN HEREON IS THE PROPERTY OF CRAVEN, THOMPSON & ASSOCIATES, INC. AND SHALL NOT BE REPRODUCED IN WHOLE OR IN PART WITHOUT WRITTEN PERMISSION OF CRAVEN•THOMPSON & ASSOCIATES, INC. COPYRIGHT © 2023

SOLESTE LA PIAZZA
HOLLYWOOD, FLORIDA

PREPARED FOR:
THE ESTATES COMPANIES

PAVEMENT MARKING & SIGNAGE PLAN

Chad E. Edwards
Florida P.E. No. 59306

22-0064-001-01

C-7

SHEET 7 OF 17

R:\Engineering\2022\22-0064-001-01 La Piazza\Drawings\22-0064 PMS.dwg [C-7] Mar 17, 2023 4:02pm RBURKERT

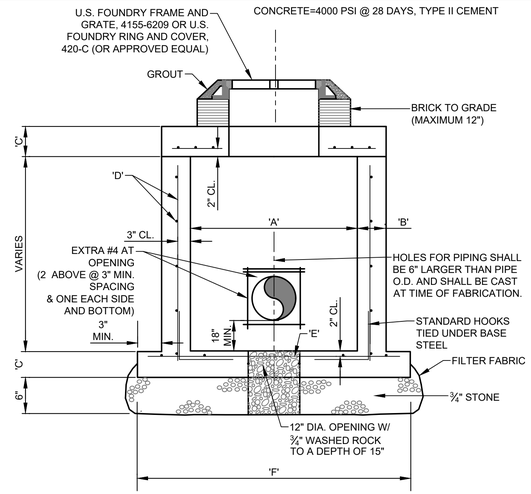

SECTION A-A

TYPE	"A"	"B"	"C"	"D"	"E"	"F"
P	3'-6" Ø	6"	8"	# 4 @ 12" C.C.E.W.	#4 @ 12" C.C.E.W.	5'-0" Ø
C-4	4'-0" Ø	8"	8"	# 4 @ 12" C.C.E.W.	#4 @ 12" C.C.E.W.	6'-4" Ø
C-5	5'-0" Ø	8"	8"	# 5 @ 12" C.C.E.W.	#5 @ 12" C.C.E.W.	7'-4" Ø
C-6	6'-0" Ø	8"	10"	# 5 @ 12" C.C.E.W.	#5 @ 6" C.C.E.W.	8'-4" Ø
C-7	7'-0" Ø	8"	10"	# 5 @ 12" C.C.E.W.	#5 @ 6" C.C.E.W.	9'-4" Ø
C-8	8'-0" Ø	10"	10"	# 5 @ 12" C.C.E.W.	#5 @ 6" C.C.E.W.	10'-8" Ø
C-10	10'-0" Ø	10"	10"	# 5 @ 12" C.C.E.W.	#5 @ 6" C.C.E.W.	12'-8" Ø

REINFORCEMENT SHALL BE ASTM A615/A615M GRADE 60 STEEL

PRECAST CIRCULAR DRAINAGE STRUCTURES

SCALE: N.T.S.

SECTION A-A

TYPE	"A"	"B"	"C"	"D"	"E"	"F"
P	3'-6"	6"	8"	# 4 @ 12" C.C.E.W.	#4 @ 12" C.C.E.W.	5'-0"
C-4	4'-0"	8"	8"	# 4 @ 12" C.C.E.W.	#4 @ 12" C.C.E.W.	6'-4"
C-5	5'-0"	8"	8"	# 5 @ 12" C.C.E.W.	#5 @ 12" C.C.E.W.	7'-4"
C-6	6'-0"	8"	10"	# 6 @ 12" C.C.E.W.	#5 @ 6" C.C.E.W.	8'-4"
C-7	7'-0"	10"	10"	# 5 @ 12" C.C.V.E.F.	#5 @ 6" C.C.E.W.	9'-4"
C-8	8'-0"	10"	10"	# 5 @ 6" C.C.H.E.F.	#5 @ 6" C.C.E.W.	10'-4"
C-10	10'-0"	10"	10"		5 @ 6" C.C.E.W.	12'-4"

REINFORCEMENT SHALL BE ASTM A615/A615M GRADE 60 STEEL

PRECAST SQUARE DRAINAGE STRUCTURES

SCALE: N.T.S.

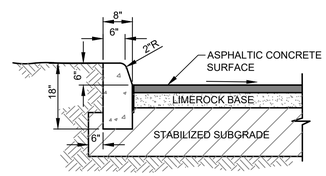

FDOT TYPE "D" CONCRETE CURB

SCALE: N.T.S.

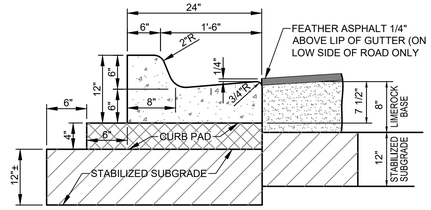

TYPE "F" CURB & GUTTER

SCALE: N.T.S.

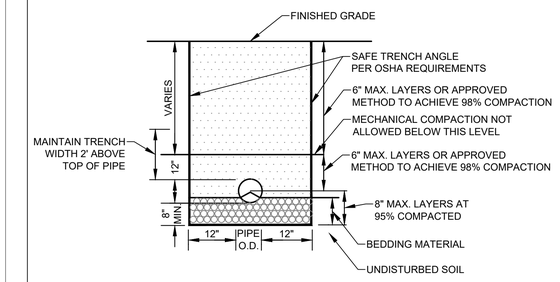

NOTES:

1. WHERE SOIL CONDITIONS CANNOT BE MAINTAINED AS SHOWN ABOVE, PROVIDE APPROVED MEANS OF CONSTRUCTION.
2. UNLESS OTHERWISE NOTED, BEDDING MATERIAL SHALL CONSIST OF WASHED AND GRADED ROCK (3/8"-1/2").
3. SHEETING WILL BE REQUIRED AS DETERMINED IN THE FIELD.
4. REFER TO SPECIFICATIONS FOR EXCAVATION IN MUCK OR OTHER UNSUITABLE MATERIAL.
5. COMPACTION PERCENTAGES SHOWN REFER TO AASHTO T-180.

TRENCH DETAIL

SCALE: N.T.S. (UNPAVED AREAS)

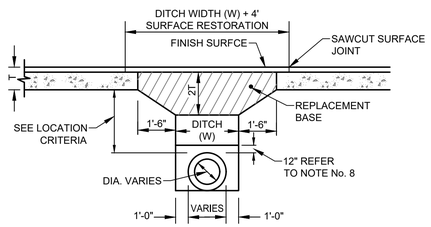

GENERAL NOTES:

1. REPLACE BASE MATERIAL OVER DITCH SHALL BE TWICE THE THICKNESS OF THE ORIGINAL BASE. MINIMUM 12", MAXIMUM 18", MINIMUM LBR 100.
2. BASE MATERIAL SHALL BE PLACED IN 6" MAXIMUM (LOOSE MEASUREMENT) LAYERS AND EACH LAYER THOROUGHLY ROLLED AND TAMPED TO 98% OF MAXIMUM DENSITY, PER A.A.S.H.T.O. T-180.
3. ASPHALT CONCRETE PAVEMENT JOINTS SHALL BE MECHANICALLY SAWED.
4. ALL EDGES AND SURFACES SHALL BE TACK COATED.
5. SURFACE MATERIAL SHALL BE CONSISTENT WITH THE EXISTING SURFACE.
6. BASE MATERIAL SHALL BE CONSISTENT WITH THE EXISTING BASE.
7. IF THE DITCH IS FILLED TEMPORARILY IT SHALL BE COVERED WITH A 2" ASPHALTIC CONCRETE/PATCH TO KEEP THE FILL MATERIAL FROM RAVELING UNTIL REPLACED WITH PERMANENT PATCH.
8. MECHANICAL COMPACTION NOT ALLOWED BELOW THIS LEVEL. .
9. COMPACTION PERCENTAGES SHOWN REFER TO A.A.S.H.T.O. T-180.

TRENCH DETAIL

SCALE: N.T.S. (PAVED AREAS)

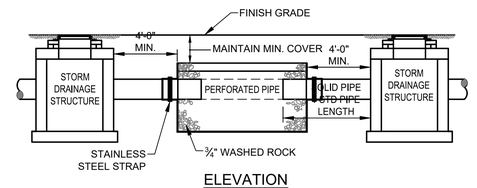

ELEVATION

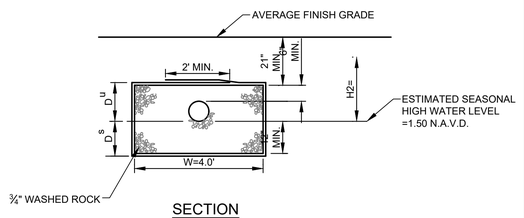

SECTION

NOTES:

1. PIPES SHALL CONNECT TO ADDITIONAL CATCH BASINS AS REQUIRED.
2. BALLAST ROCK SHALL BE FROM FRESH WATER WASHED FREE OF DELETERIOUS MATTER.
3. TRENCH TO BE LINED WITH AMOCO PROPEX 4545 OR APPROVED EQUIVALENT TYPE FILTER FABRIC. OVERLAP TRENCH LINING MATERIAL A MINIMUM OF 2' AT TOP OF TRENCH. CLOSE ENDS AND STRAP AROUND PIPE.
4. BIO-BARRIER SHALL BE INSTALLED ADJACENT TO EXFILTRATION TRENCH WHEN EXISTING OR PROPOSED TREES ARE LOCATED WITHIN 10.0' OF CENTERLINE OF PIPE. INSTALLATION OF BIO-BARRIER SHALL BE IN ACCORDANCE WITH BIO-BARRIER DETAIL (SEE LANDSCAPE DRAWING DETAILS).

EXFILTRATION TRENCH DETAIL

SCALE: N.T.S.

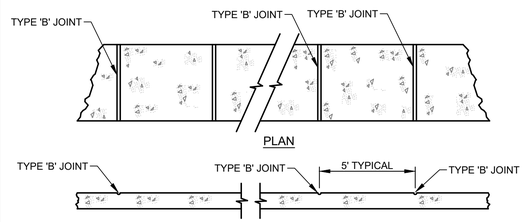

ELEVATION

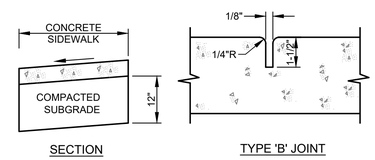

SECTION TYPE 'B' JOINT

NOTES:

1. SIDEWALK SHALL BE 4" THICK EXCEPT IN DRIVEWAYS AND AREAS SUBJET TO VEHICULAR TRAFFIC WHERE THE THICKNESS SHALL BE 6".
2. SUBGRADE BELOW SIDEWALK SHALL BE COMPACTED TO 98% OF MAX. DENSITY PER A.A.S.H.T.O. T-180.
3. CONCRETE STRENGTH SHALL BE MIN. 3000 PSI @ 28 DAYS.

TABLE OF SIDEWALK JOINTS	
TYPE	LOCATION
"B"	5 FEET CENTER TO CENTER ON SIDEWALKS.

SIDEWALK DETAILS

SCALE: N.T.S.

CRAVEN • THOMPSON AND ASSOCIATES, INC.
ENGINEERS • PLANNERS • SURVEYORS
3563 N.W. 53RD STREET, FORT LAUDERDALE, FLORIDA 33309
TEL.: (954) 739-6400 FAX: (954) 739-6409
FLORIDA LICENSED ENGINEERING, SURVEYING & MAPPING BUSINESS No. 271
FLORIDA LICENSED LANDSCAPE ARCHITECTURE BUSINESS No. 0000314

MATERIAL SHOWN HEREON IS THE PROPERTY OF CRAVEN, THOMPSON & ASSOCIATES, INC. AND SHALL NOT BE REPRODUCED OR REUSED, OR IN PART WITHOUT WRITTEN PERMISSION OF CRAVEN-THOMPSON & ASSOCIATES, INC. COPYRIGHT © 2023

DATE:	03/17/23
SCALE:	1"=20'
DESIGN BY:	LZG
DRAWN BY:	LZG
CHECKED BY:	CEE
APPROVED BY:	CEE

BY:	DATE:	DESCRIPTION:

SOLESTE LA PIAZZA
HOLLYWOOD, FLORIDA

PREPARED FOR:
THE ESTATES COMPANIES

PAVING, GRADING, & DRAINAGE DETAILS

Chad E. Edwards
Florida P.E. No. 59306

22-0064-001-01

C-8

SHEET 8 OF 17

CHAD E. EDWARDS, STATE OF FLORIDA
PROFESSIONAL ENGINEER, LICENSE NO. 59306
THIS ITEM HAS BEEN DIGITALLY SIGNED AND SEALED BY CHAD E. EDWARDS ON THE DATE INDICATED HERE.
PRINTED COPIES OF THIS DOCUMENT ARE NOT CONSIDERED SIGNED AND SEALED AND THE SIGNATURE MUST BE VERIFIED ON ANY ELECTRONIC COPIES

R:\Engineering\2022\22-0064-001-01 La Piazza\Drawings\22-0064 PGDD.dwg [C-8] Mar 17, 2023 4:02pm RBURKERT

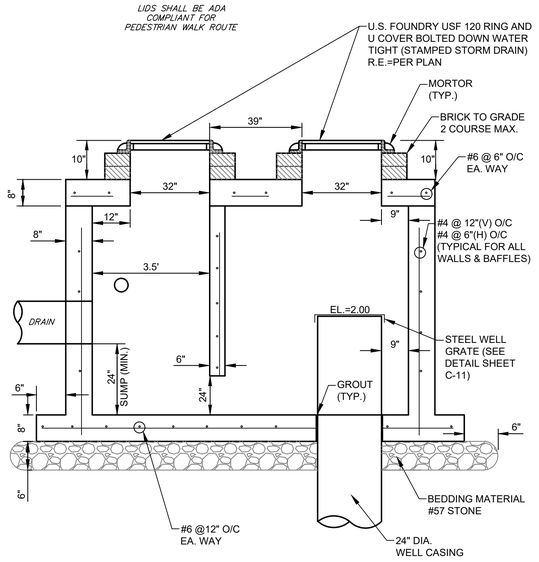

SECTION A-A

SEE PLAN VIEW SHEET FOR STRUCTURE AND WELL ORIENTATION

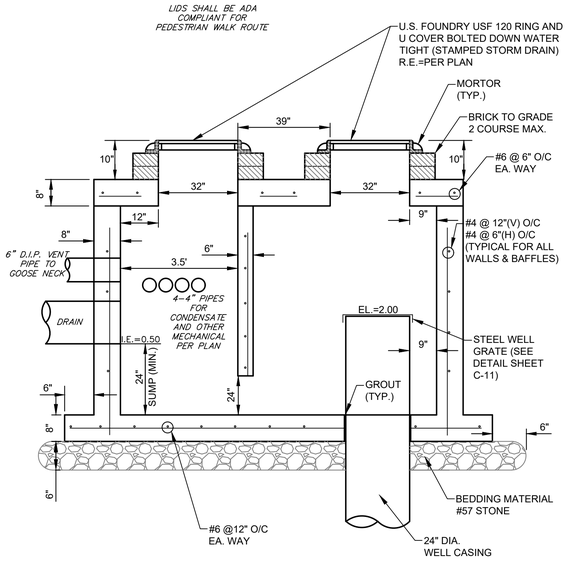

SECTION A-A

SEE PLAN VIEW SHEET FOR STRUCTURE AND WELL ORIENTATION

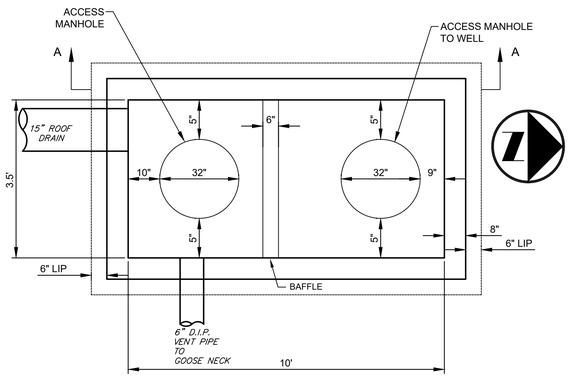

PLAN

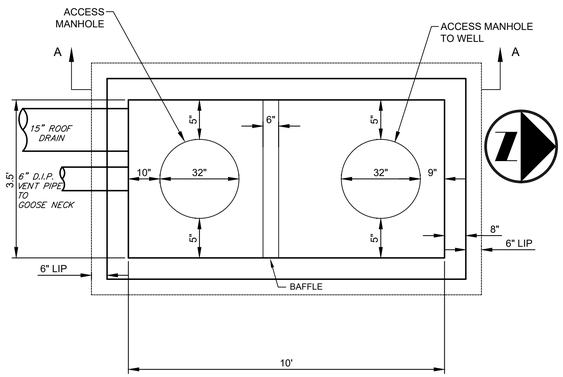

PLAN

NOTES

1. 250 GPM/FT HD.
2. 2' OF HEAD ASSUMED TO OVERCOME DENSITY DIFFERENTIAL.
3. 5'x 10' STORM STRUCTURE PER U.S. PRECAST COMPANY
4. CONCRETE= 4000 PSI @ 28 DAYS.
5. HOLES FOR PIPING SHALL BE 6" LARGER THAN PIPE O.D.
6. AND SHALL BE CAST AT TIME OF FABRICATION
7. BAFFLE WALL IS POURED SEPARATELY & IS GROUTED INTO KEYWAY WHICH IS CAST INTO THE WALL SECTION. THE BAFFLE IS USED TO TRAP FLOATING POLLUTANTS IN THE UPSTREAM SIDE OF CHAMBER BEFORE REACHING THE STORMWATER WELL
8. WATER TABLE ELEVATION=0.5 N.A.V.D.
9. WELL SHALL HAVE A MINIMUM CAPACITY OF 300 GPM. WELL IS TO HAVE A MIMINUM 155' OF CASING DEPTH WITH 30' OF OPEN HOLE DEPTH. CONTRACTOR SHALL ANTICIPATE 220' CASING DEPTH WITH 30' OF OPEN HOLE DEPTH FOR PRICING PURPOSES. CONTRACTOR IS TO CONTACT ENGINEER AT VARIOUS DEPTHS DURING WELL TO DETERMINE ACTUAL DEPTH OF WELL BASED ON FIELD CONDITIONS.
10. WELL CONTRACTOR IS RESPONSIBLE TO PROVIDE REASONABLE ASSURANCE REPORT REQUIRED BY FDEP.
11. ENGINEER SHALL BE NOTIFIED IMMEDIATELY IF ANTICIPATED WELL DISCHARGE RATE IS NOT ACHIEVED.

PRECAST DRAINAGE WELL #1

SCALE: N.T.S.

NOTES

1. 250 GPM/FT HD.
2. 2' OF HEAD ASSUMED TO OVERCOME DENSITY DIFFERENTIAL.
3. 5'x 10' STORM STRUCTURE PER U.S. PRECAST COMPANY
4. CONCRETE= 4000 PSI @ 28 DAYS.
5. HOLES FOR PIPING SHALL BE 6" LARGER THAN PIPE O.D.
6. AND SHALL BE CAST AT TIME OF FABRICATION
7. BAFFLE WALL IS POURED SEPARATELY & IS GROUTED INTO KEYWAY WHICH IS CAST INTO THE WALL SECTION. THE BAFFLE IS USED TO TRAP FLOATING POLLUTANTS IN THE UPSTREAM SIDE OF CHAMBER BEFORE REACHING THE STORMWATER WELL
8. WATER TABLE ELEVATION=0.5 N.A.V.D.
9. WELL SHALL HAVE A MINIMUM CAPACITY OF 300 GPM. WELL IS TO HAVE A MIMINUM 155' OF CASING DEPTH WITH 30' OF OPEN HOLE DEPTH. CONTRACTOR SHALL ANTICIPATE 220' CASING DEPTH WITH 30' OF OPEN HOLE DEPTH FOR PRICING PURPOSES. CONTRACTOR IS TO CONTACT ENGINEER AT VARIOUS DEPTHS DURING WELL TO DETERMINE ACTUAL DEPTH OF WELL BASED ON FIELD CONDITIONS.
10. WELL CONTRACTOR IS RESPONSIBLE TO PROVIDE REASONABLE ASSURANCE REPORT REQUIRED BY FDEP.
11. ENGINEER SHALL BE NOTIFIED IMMEDIATELY IF ANTICIPATED WELL DISCHARGE RATE IS NOT ACHIEVED.

PRECAST DRAINAGE WELL #2

SCALE: N.T.S.

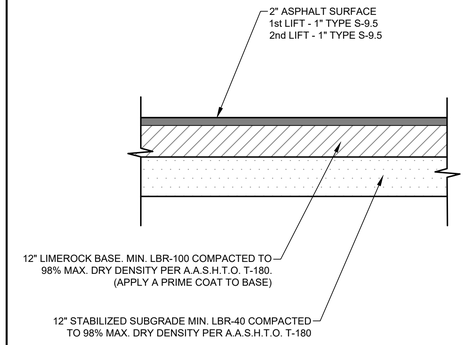

TYPICAL PAVEMENT SECTION

SCALE: N.T.S.

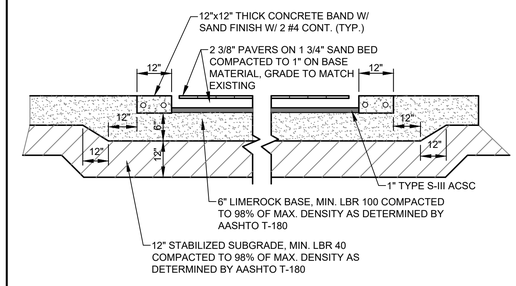

SIDEWALK PAVER DETAIL

SCALE: N.T.S.

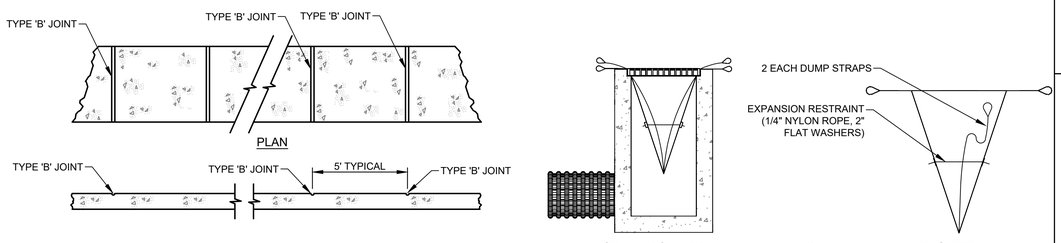

NOTES:

1. SIDEWALK SHALL BE 4" THICK EXCEPT IN DRIVEWAYS AND AREAS SUBJET TO VEHICULAR TRAFFIC WHERE THE THICKNESS SHALL BE 6".
2. SUBGRADE BELOW SIDEWALK SHALL BE COMPACTED TO 98% OF MAX. DENSITY PER A.A.S.H.T.O. T-180.
3. CONCRETE STRENGTH SHALL BE MIN. 3000 PSI @ 28 DAYS.

TABLE OF SIDEWALK JOINTS	
TYPE	LOCATION
"B"	5 FEET CENTER TO CENTER ON SIDEWALKS.

SIDEWALK DETAILS

SCALE: N.T.S.

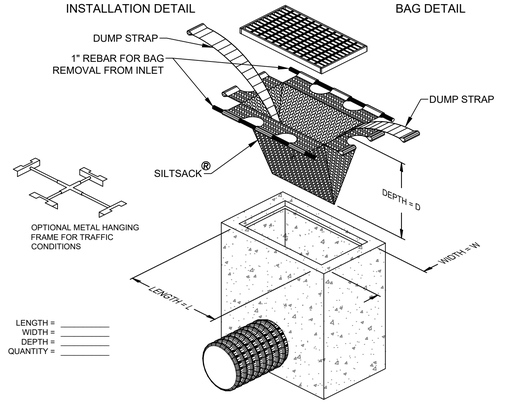

INLET SEDIMENT CONTROL DEVICE

N.T.S.

DATE:	03/17/23
SCALE:	1"=20'
DESIGN BY:	LZG
DRAWN BY:	LZG
CHECKED BY:	CEE
APPROVED BY:	CEE

DESCRIPTION:	BY:	DATE:

CRAVEN • THOMPSON AND ASSOCIATES, INC.
ENGINEERS • PLANNERS • SURVEYORS
3563 N.W. 53RD STREET, FORT LAUDERDALE, FLORIDA 33309
FAX: (954) 739-6400 TEL.: (954) 739-6400
FLORIDA LICENSED ENGINEERING, SURVEYING & MAPPING BUSINESS No. 271
FLORIDA LICENSED LANDSCAPE ARCHITECTURE BUSINESS No. C000314

MATERIAL SHOWN HEREON IS THE PROPERTY OF CRAVEN, THOMPSON & ASSOCIATES, INC. AND SHALL NOT BE REPRODUCED IN WHOLE OR IN PART WITHOUT WRITTEN PERMISSION OF CRAVEN-THOMPSON & ASSOCIATES, INC. ©COPYRIGHT CTA 2023

SOLESTE LA PIAZZA
HOLLYWOOD, FLORIDA

PREPARED FOR:
THE ESTATES COMPANIES

PAVING, GRADING, & DRAINAGE DETAILS

Chad E. Edwards
Florida P.E. No. 59306

22-0064-001-01

C-9

SHEET 9 OF 17

CHAD E. EDWARDS, STATE OF FLORIDA
PROFESSIONAL ENGINEER, LICENSE NO. 59306
THIS ITEM HAS BEEN DIGITALLY SIGNED AND SEALED BY CHAD E. EDWARDS ON THE DATE INDICATED HERE.
PRINTED COPIES OF THIS DOCUMENT ARE NOT CONSIDERED SIGNED AND SEALED AND THE SIGNATURE MUST BE VERIFIED ON ANY ELECTRONIC COPIES

R:\Engineering\2022\22-0064-001-01 La Piazza\Drawings\22-0084 PGDD.dwg [C-9] Mar 17, 2023 4:02pm RBURKERT

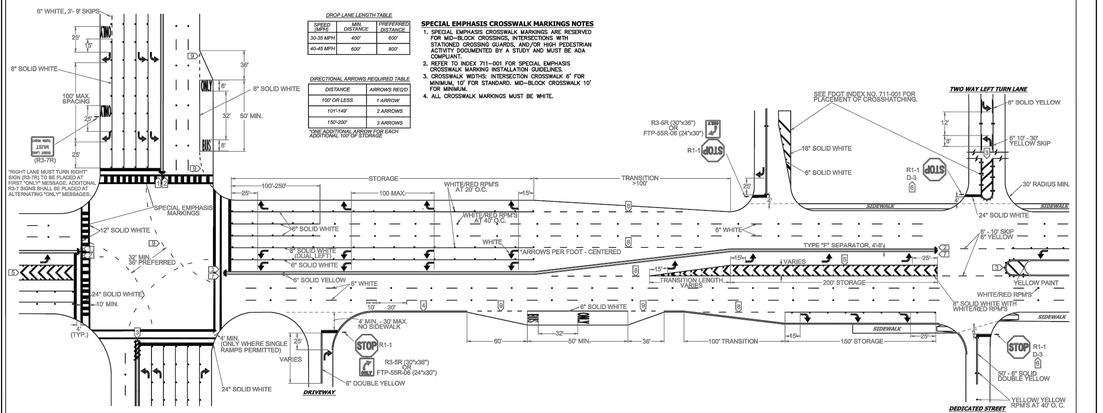

DROP LANE LENGTH TABLE		
SPEED (MPH)	MIN. DISTANCE	PREFERRED DISTANCE
30-35 MPH	400'	600'
40-45 MPH	600'	800'

DIRECTIONAL ARROWS REQUIRED TABLE	
DISTANCE	ARROWS REQD
100' OR LESS	1 ARROW
101'-149'	2 ARROWS
150'-200'	3 ARROWS

ONE ADDITIONAL ARROW FOR EACH ADDITIONAL 100'-0" STORAGE

SPECIAL EMPHASIS CROSSWALK MARKINGS NOTES

1. SPECIAL EMPHASIS CROSSWALK MARKINGS ARE RESERVED FOR MID-BLOCK CROSSINGS, INTERSECTIONS WITH STATIONED CROSSING GUARDS, AND/OR HIGH PEDESTRIAN ACTIVITY DOCUMENTED BY A STUDY AND MUST BE ADA COMPLIANT.
2. REFER TO INDEX 711-001 FOR SPECIAL EMPHASIS CROSSWALK MARKING INSTALLATION GUIDELINES.
3. CROSSWALK WIDTHS: INTERSECTION CROSSWALK 6' FOR MINIMUM, 10' FOR STANDARD. MID-BLOCK CROSSWALK 10' FOR MINIMUM.
4. ALL CROSSWALK MARKINGS MUST BE WHITE.

NOTES

1. ALL PAVEMENT MARKINGS SHALL BE ALKYD BASED THERMOPLASTIC AND FULLY RETROREFLECTORIZED.
2. ALL PAVEMENT MARKINGS ON PAVER SYSTEMS SHALL BE 3M 380/381 SERIES TAPE OR EQUIVALENT AND APPLIED WITH PRO ACHIEVE AS PER MANUFACTURERS SPECIFICATIONS.
3. ALL PAVEMENT MARKINGS AND SIGNING SHALL BE IN ACCORDANCE WITH THE "MANUAL ON UNIFORM TRAFFIC CONTROL DEVICES", BCTED STANDARDS, AND FDOT DESIGN STANDARDS.
4. SEE FDOT INDEX NO 706-001 FOR PLACEMENT OF RPM's (FOR BULLNOSE RPM TREATMENT, SEE LEGEND NO. 1)
5. RPM's SHALL BE CLASS "B" OR EQUIVALENT, APPLIED WITH EPOXY OR BITUMINOUS ADHESIVE.
6. FDOT APPROVED SEALER SHALL BE USED WHEN APPLYING MARKINGS ON CONCRETE.
7. FOR BIKE LANE DETAILS SEE FDOT INDEX NO. 711-002.
8. EXISTING MARKINGS SHALL BE REMOVED BY WATER BLASTING OR SAND BLASTING.
9. ALL STOP LINES TO BE 4" BEHIND CROSSWALK OR SIDEWALK.
10. PAVEMENT MARKING REFLECTIVITY SHALL BE UNIFORM ACROSS THE ENTIRE STRIPE AND SHALL HAVE A MINIMUM REFLECTIVITY READING OF 250 MILLICANDELAS FOR WHITE AND 175 MILLICANDELAS FOR YELLOW.
11. ALL PRODUCTS MUST BE ON FDOT'S APPROVED PRODUCTS LIST (APL).
12. RPMS SHALL NOT BE INSTALLED ADJACENT TO BIKE LANES.
13. LONGITUDINAL CROSSWALK MARKINGS SHALL BE INSTALLED AT ALL CROSS STREETS ON COUNTY ROADS THAT ARE FOUR LANES OR GREATER.

LEGEND

1. **YELLOW/YELLOW RPM DETAILS** — DIRECTION OF TRAVEL; CENTERLINE; 40' O.C. Y MIN TO CROSSWALK; RETROREFLECTIVE YELLOW; DIRECTION OF TRAVEL
2. **MEDIAN NOSE PAINT DETAILS** — RAISED SEPARATOR; GRASS MEDIAN; POINT OF CURB; RETROREFLECTIVE YELLOW; RADIUS POINT; DO NOT PAINT BRICK PAVERS
3. **PAINTED MEDIAN DETAILS** — DIRECTION OF TRAVEL; 6" SOLID DOUBLE YELLOW; T' O.C.; YELLOW PAINT; 18" SOLID YELLOW; YELLOW/YELLOW RPM's
4. **EDGE LINE DETAILS** — 6" SOLID WHITE OR YELLOW; EDGE OF PAVEMENT
5. **CHEVRON DETAILS - CROSSWALK AREAS AND 1N FRONT OF CURB RAMPS** — DIRECTION OF TRAVEL; WHITE/RED RPM's; 18" SOLID WHITE; 6" SOLID WHITE; DIRECTION OF TRAVEL; (SEE FDOT INDEX NO. 17346 FOR SPACING OF CHEVRONS)
6. **STREET NAME BLADE DETAILS** — SEE BCTED STOP SIGN AND STREET IDENTIFICATION ASSEMBLY TYPICAL DETAILS
7. **TYPE IV SEPARATOR DETAILS** — REFLECTIVE YELLOW PAINT; YELLOW/YELLOW RPM's; 6" SOLID YELLOW; TYPE IV CURB AND GUTTER
8. **6'-10' SKIP DETAILS** — 6" - 10' SKIPS 6" WHITE SHALL BE USED FOR THE FOLLOWING CONDITIONS:
   - TRANSITIONS AT ALL LEFT AND RIGHT TURN LANES
9. **2'-4' SKIP DETAILS** — 2' - 4' SKIPS 6" WHITE SHALL BE USED FOR THE FOLLOWING CONDITIONS:
   - THROUGH LANES (SEE BETWEEN DUAL LEFTS TURN MOVEMENT (90' RADIUS INTERSECTIONS ONLY) (SEE GP PLANS)
   - BUS BAY TRANSITIONS

STOP SIGN NOTE

WHERE SIDE ROADS INTERSECT A MULTI LANE STREET OR HIGHWAY THAT HAS A SPEED LIMIT OF 40 MPH OR HIGHER, THE MINIMUM SIZE OF THE STOP SIGNS FACING THE SIDE ROAD APPROACHES, EVEN IF THE SIDE ROAD ONLY HAS ONE APPROACH LANE, SHALL BE 36"X36".

WHERE SIDE ROADS INTERSECT A MULTI-LANE (INCLUDING TURN LANE) STREET OR HIGHWAY THAT HAS A SPEED LIMIT OF 40 MPH OR LOWER, THE MINIMUM SIZE OF THE STOP SIGN FACING THE SIDE ROAD APPROACHES SHALL BE 36"X36".

REVISIONS	
DATE	DESCRIPTION
11-24-2020	UPDATED NOTES
04-14-2021	UPDATED NOTES
05-06-2022	UPDATED NOTES

BROWARD COUNTY FLORIDA

PUBLIC WORKS DEPARTMENT
TRAFFIC ENGINEERING DIVISION

DESIGN BY: CARMELO CARATOZZOLO, P.E.	SCALE: NTS
DRAWN BY: STEPHON RAMOUTAR	
CHECKED BY: CARMELO CARATOZZOLO, P.E.	

PAVEMENT MARKINGS AND SIGNS DETAILS

SHEET NO. 1 OF 1

GUIDE TO USE THIS STANDARD:

1. Calculate the Total Panel Area and the centroid 'C' for an individual sign or a sign cluster.
2. Determine the height 'H' from the groundline for the individual sign or the cluster.
3. Consult the Post Size Table and find the intersection point.
4. Design the post and the foundation according to the required Post Size and Assembly Details.

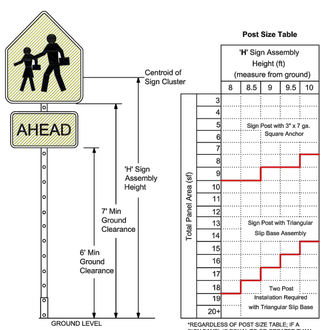

Post Size Table

Total Panel Area (sf)	'H' Sign Assembly Height (ft) (measure from ground) 8	8.5	9	9.5	10
3					
4					
5	Sign Post with 3" x 7 ga. Square Anchor				
6					
7					
8					
9					
10					
11					
12					
13	Sign Post with Triangular Slip Base Assembly				
14					
15					
16					
17					
18	Two Post Installation Required with a Triangular Slip Base				
19					
20+					

*REGARDLESS OF POST SIZE TABLE, IF A SIGN PANEL IS EQUAL TO OR GREATER THAN 4 FEET IN WIDTH, A TWO POST INSTALLATION IS REQUIRED WITH A TRIANGULAR SLIP BASE.

Sign Post with 3" x 7 ga. Square Anchor

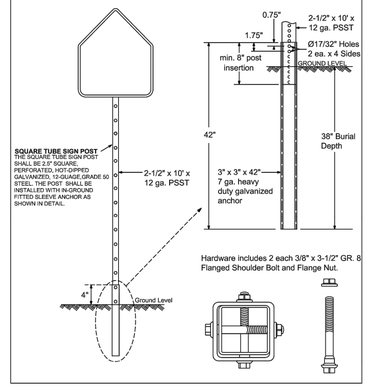

Sign Post with Triangular Slip Base

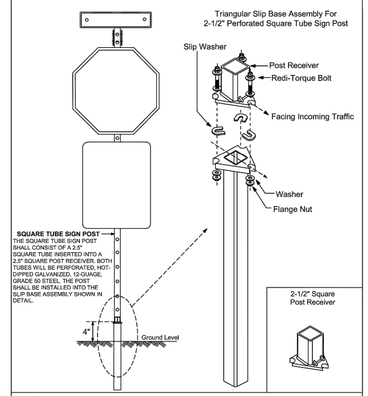

Note: Dimensions and certain details for the parts used to assemble the slip base connections are intentionally not shown. Slip base connections are patented manufactured products that are in compliance with NCHRP 350 crash test criteria. The base connection details are only shown on this plan to illustrate how the parts are assembled. The complete assembly must be designed to withstand 150 mph Base Wind Speed per 2013 AASHTO Standard Specifications for Structural Supports for Highway Signs, Luminaires, and Traffic Signals, 6th edition and interims.

REVISIONS	
DATE	DESCRIPTION
03-21-2017	UPDATED POST SIZE
11-24-2020	ADDED POST SIZE NOTE
02-05-2021	UPDATED POST BASE HEIGHT

BROWARD COUNTY FLORIDA

PUBLIC WORKS DEPARTMENT
TRAFFIC ENGINEERING DIVISION

DESIGN BY: YVES D'ANJOU, P.E.	SCALE: NTS
DRAWN BY: STEPHON RAMOUTAR	
CHECKED BY: ANDREW SEBO, P.E., PTOE	

GROUND SIGN ASSEMBLY DETAILS

SHEET NO. 1 OF 1

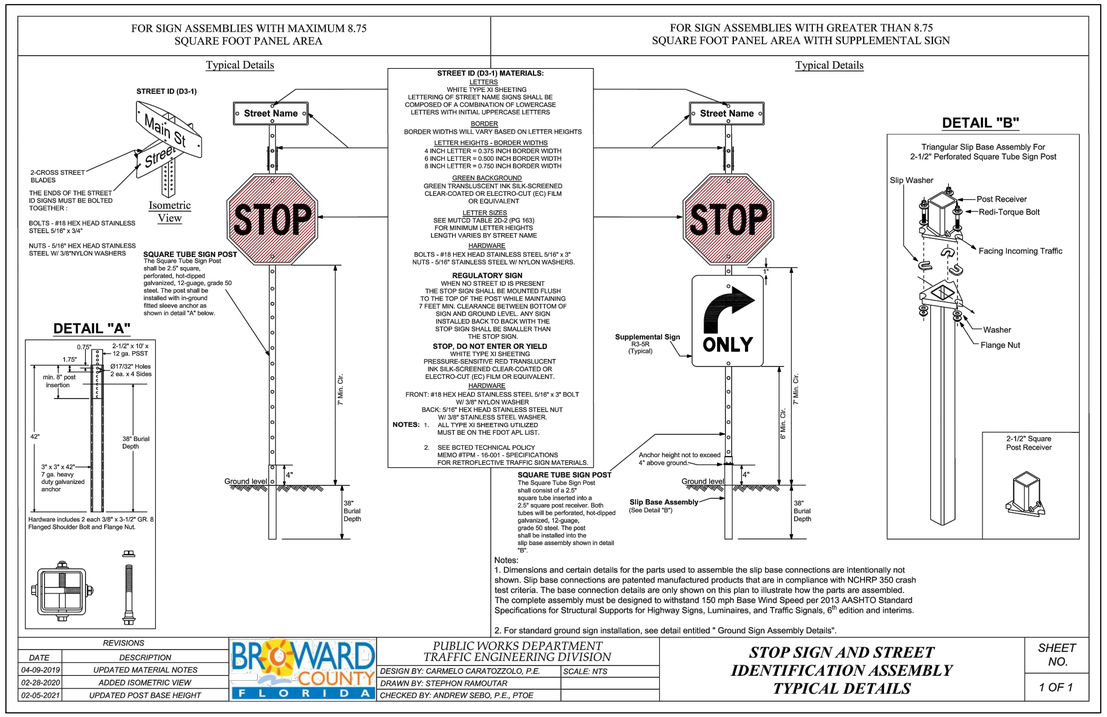

REVISIONS	
DATE	DESCRIPTION
04-09-2019	UPDATED MATERIAL NOTES
02-28-2020	ADDED ISOMETRIC VIEW
02-05-2021	UPDATED POST BASE HEIGHT

BROWARD COUNTY FLORIDA

PUBLIC WORKS DEPARTMENT
TRAFFIC ENGINEERING DIVISION

DESIGN BY: CARMELO CARATOZZOLO, P.E.	SCALE: NTS
DRAWN BY: STEPHON RAMOUTAR	
CHECKED BY: ANDREW SEBO, P.E., PTOE	

STOP SIGN AND STREET IDENTIFICATION ASSEMBLY TYPICAL DETAILS

SHEET NO. 1 OF 1

DATE:	03/17/23
SCALE:	1"=20'
DESIGN BY:	LZG
DRAWN BY:	LZG
CHECKED BY:	CEE
APPROVED BY:	CEE

BY:	DATE:	DESCRIPTION:

CRAVEN • THOMPSON AND ASSOCIATES, INC.
ENGINEERS • PLANNERS • SURVEYORS
3563 N.W. 53RD STREET, FORT LAUDERDALE, FLORIDA 33309
FAX: (954) 739-6409 TEL: (954) 739-6400
FLORIDA LICENSED ENGINEERING, SURVEYING & MAPPING BUSINESS No. 271
FLORIDA LICENSED LANDSCAPE ARCHITECTURE BUSINESS No. C000314

MATERIAL SHOWN HEREON IS THE PROPERTY OF CRAVEN, THOMPSON & ASSOCIATES, INC. AND SHALL NOT BE REPRODUCED IN WHOLE OR IN PART WITHOUT WRITTEN PERMISSION OF CRAVEN•THOMPSON & ASSOCIATES, INC. © 2019

SOLESTE LA PIAZZA
HOLLYWOOD, FLORIDA

PREPARED FOR:
THE ESTATES COMPANIES

PAVEMENT MARKING & SIGNAGE DETAILS

Chad E. Edwards
Florida P.E. No. 59306

22-0064-001-01

C-10

SHEET 10 OF 17

CHAD E. EDWARDS, STATE OF FLORIDA
PROFESSIONAL ENGINEER, LICENSE NO. 59306
THIS ITEM HAS BEEN DIGITALLY SIGNED AND SEALED BY CHAD E. EDWARDS ON THE DATE INDICATED HERE.
PRINTED COPIES OF THIS DOCUMENT ARE NOT CONSIDERED SIGNED AND SEALED AND THE SIGNATURE MUST BE VERIFIED ON ANY ELECTRONIC COPIES

R:\Engineering\2022\22-0064-001-01 La Piazza\Drawings\22-0064 PMS DET.dwg [C-10] Mar 17, 2023 4:02pm RBURKERT

GENERAL NOTES:

1. THE INFORMATION PROVIDED IN THESE DRAWINGS IS SOLELY TO ASSIST THE CONTRACTOR IN ASSESSING THE NATURE AND EXTENT OF CONDITIONS WHICH WILL BE ENCOUNTERED DURING THE COURSE OF THE WORK. THE CONTRACTORS ARE DIRECTED, PRIOR TO BIDDING, TO CONDUCT WHATEVER INVESTIGATIONS THEY DEEM NECESSARY TO ARRIVE AT THEIR OWN CONCLUSION REGARDING THE ACTUAL CONDITIONS THAT WILL BE ENCOUNTERED, AND UPON WHICH BIDS WILL BE BASED.
2. ALL CONSTRUCTION AND MATERIALS SHALL CONFORM TO APPLICABLE STANDARDS AND SPECIFICATIONS OF THE CITY OF HOLLYWOOD DEPARTMENT OF PUBLIC UTILITIES, ENGINEERING AND CONSTRUCTION SERVICES DIVISION (ECSD), AND ALL OTHER LOCAL, STATE AND NATIONAL CODES, WHERE APPLICABLE.
3. LOCATIONS, ELEVATIONS, SIZES, MATERIALS, ALIGNMENTS, AND DIMENSIONS OF EXISTING FACILITIES, UTILITIES AND OTHER FEATURES ARE SHOWN ACCORDING TO THE BEST INFORMATION AVAILABLE AT THE TIME OF THE PREPARATION OF THESE PLANS; AND DO NOT PURPORT TO BE ABSOLUTELY CORRECT. ALSO, THERE MAY HAVE BEEN OTHER IMPROVEMENTS, UTILITIES, ETC., WITHIN THE PROJECT AREA WHICH WERE CONSTRUCTED AFTER THE PREPARATION OF THESE PLANS AND/OR THE ORIGINAL SITE SURVEY. THE CONTRACTOR SHALL VERIFY THE LOCATIONS, ELEVATIONS, AND OTHER FEATURES AFFECTING HIS/HER WORK PRIOR TO CONSTRUCTION, AND NOTIFY THE ENGINEER IMMEDIATELY WHEN CONFLICT BETWEEN DRAWINGS AND ACTUAL CONDITIONS ARE DISCOVERED. THE ENGINEER ASSUMES NO RESPONSIBILITY FOR ANY FACILITIES SHOWN OR NOT SHOWN ON THE PLANS. THE CONTRACTOR SHALL WORK AS NEEDED TO AVOID CONFLICT WITH EXISTING UTILITIES (NO ADDITIONAL COST SHALL BE PAID FOR THIS WORK). EXISTING UTILITIES SHALL BE MAINTAINED IN SERVICE DURING CONSTRUCTION UNLESS OTHERWISE APPROVED BY THE RESPECTIVE UTILITY OWNER.
4. THE CONTRACTOR SHALL COORDINATE WITH ALL UTILITIES TO ARRANGE FOR THE RELOCATION AND TEMPORARY SUPPORT OF UTILITY FEATURES, ETC. AS NECESSARY TO COMPLETE THE WORK.
5. IT SHALL BE THE CONTRACTOR'S RESPONSIBILITY TO LOCATE AND PROTECT ANY AND ALL EXISTING UTILITIES ON THIS PROJECT, AND TO ENSURE THAT EXISTING UTILITIES ARE MAINTAINED IN SERVICE DURING CONSTRUCTION UNLESS APPROVED OTHERWISE BY THE UTILITY OWNER.
6. CONTRACTOR SHALL ADJUST ALL EXISTING UTILITY CASTINGS INCLUDING VALVE BOXES, MANHOLES, HAND-HOLES, PULL-BOXES, STORMWATER INLETS, AND SIMILAR STRUCTURES IN CONSTRUCTION AREA TO BE OVERLAID WITH ASPHALT PAVEMENT.
7. THE CONTRACTOR IS REQUIRED TO OBTAIN ALL APPLICABLE CONSTRUCTION AND ENVIRONMENTAL PERMITS PRIOR TO THE START OF CONSTRUCTION.
8. THE CONTRACTOR SHALL NOTIFY ECSD AT LEAST 48 HOURS PRIOR TO BEGINNING CONSTRUCTION.
9. PRIOR TO THE COMMENCEMENT OF CONSTRUCTION AND INSTALLATION OF THE PROPOSED IMPROVEMENTS, SHOP DRAWINGS SHALL BE SUBMITTED TO ECSD IN ACCORDANCE WITH THE CONTRACT DOCUMENT'S REQUIREMENTS, FOR APPROVAL. IN ADDITION, IT IS THE CONTRACTOR'S RESPONSIBILITY TO OBTAIN ANY OTHER AGENCY SHOP DRAWING APPROVAL, IF REQUIRED.
10. THE CONTRACTOR SHALL NOTIFY ECSD IMMEDIATELY FOR ANY CONFLICT ARISING DURING CONSTRUCTION OF ANY IMPROVEMENTS SHOWN ON THESE DRAWINGS. THIS WORK BY THE CONTRACTOR SHALL BE CONSIDERED INCIDENTAL TO THE CONTRACT AND NO ADDITIONAL COMPENSATION SHALL BE ALLOWED.
11. ELEVATIONS SHOWN ARE IN FEET AND ARE REFERENCED TO THE NORTH AMERICAN VERTICAL DATUM OF 1988 (NAVD 88).

ISSUED: 03/01/1994	DEPARTMENT OF PUBLIC UTILITIES STANDARD DETAIL	REVISED: 06/08/2014
DRAWN: EAM	GENERAL NOTES	DRAWING NO. G-00
APPROVED: XXX		

GENERAL NOTES (CONTINUED):

12. CITY OF HOLLYWOOD SHALL NOT PROVIDE STAGING / STORAGE AREA. CONTRACTOR SHALL SECURE STAGING / STORAGE AREA AS NECESSARY FOR CONSTRUCTION WORK.
13. CONTRACTOR SHALL HAUL AWAY EXCESSIVE STOCKPILE OF SOIL FOR DISPOSAL EVERY DAY. NO STOCKPILE SOIL IS ALLOWED TO BE LEFT ON THE CONSTRUCTION SITE OVER NIGHT.
14. CONTRACTOR SHALL CLEAN / SWEEP THE ROAD AT LEAST ONCE DAY OR AS REQUIRED BY THE ENGINEER.
15. CONTRACTOR SHALL PROTECT CATCH BASINS WITHIN / ADJACENT TO THE CONSTRUCTION SITE AS REQUIRED BY NPDES REGULATIONS.
16. THE CITY OF HOLLYWOOD HAS A NOISE ORDINANCE (CHAPTER 100) WHICH PROHIBITS EXCAVATION AND CONSTRUCTION BEFORE 8:00 A.M. AND AFTER 6:00 P.M., MONDAY THROUGH SATURDAY AND ALL DAY SUNDAY.
17. SUITABLE EXCAVATED MATERIAL SHALL BE USED IN FILL AREAS. NO SEPARATE PAY ITEM FOR THIS WORK, INCLUDE COST IN OTHER ITEMS.
18. ALL ROAD CROSSINGS ARE OPEN CUT AS PER THE REQUIREMENTS OF THE ECSD UNLESS OTHERWISE NOTED ON THE DRAWINGS.
19. THE CONTRACTOR SHALL REPLACE ALL PAVING, STABILIZING EARTH, DRIVEWAYS, PARKING LOTS, SIDEWALKS, ETC. TO SATISFY THE INSTALLATION OF THE PROPOSED IMPROVEMENTS WITH THE SAME TYPE OF MATERIAL THAT WAS REMOVED DURING CONSTRUCTION OR AS DIRECTED BY ECSD FIELD ENGINEER.
20. THE CONTRACTOR SHALL NOT ENCROACH INTO PRIVATE PROPERTY WITH PERSONNEL, MATERIAL OR EQUIPMENT. IN CASE WORK ON PRIVATE PROPERTY IS NEEDED, A CITY OF HOLLYWOOD "RIGHT OF ENTRY" FORM MUST BE SIGNED BY PROPERTY OWNER AND THE DIRECTOR OF PUBLIC UTILITIES. THE CONTRACTOR IS RESPONSIBLE TO MAINTAIN ACCESS AT ALL TIMES TO PRIVATE HOMES/BUSINESSES.
21. THE CONTRACTOR SHALL BE RESPONSIBLE FOR DAMAGE, REMOVAL OR MODIFICATION, CAUSED TO ANY IRRIGATION SYSTEM (PRIVATE OR PUBLIC) ACCIDENTALLY OR PURPOSELY. THE CONTRACTOR SHALL REPLACE ANY DAMAGED, REMOVED OR MODIFIED IRRIGATION PIPES, SPRINKLER HEADS OR OTHER PERTINENT APPURTENANCES TO MATCH OR EXCEED EXISTING CONDITIONS AT NO ADDITIONAL COST TO THE CITY.
22. MAIL BOXES, FENCES OR OTHER PRIVATE PROPERTY DAMAGED DURING THE CONSTRUCTION OF THE PROPOSED IMPROVEMENTS SHALL BE REPLACED TO MATCH OR EXCEED EXISTING CONDITION.
23. CONTRACTOR SHALL PROVIDE MAINTENANCE OF TRAFFIC IN ACCORDANCE WITH FDOT STANDARDS AND CITY OF HOLLYWOOD DEPARTMENT OF PUBLIC UTILITIES STANDARDS.
24. NO TREES ARE TO BE REMOVED OR RELOCATED WITHOUT PRIOR APPROVAL FROM THE ECSD FIELD ENGINEER.
25. THE CONTRACTOR IS RESPONSIBLE FOR OBTAINING THE NECESSARY TREE REMOVAL OR RELOCATION PERMITS FROM THE CITY OF HOLLYWOOD BUILDING DEPARTMENT FOR TREES LOCATED IN THE PUBLIC RIGHT OF WAY.
26. IT IS THE INTENT OF THESE PLANS TO BE IN ACCORDANCE WITH APPLICABLE CODES AND AUTHORITIES HAVING JURISDICTION. ANY DISCREPANCIES BETWEEN THESE PLANS AND APPLICABLE REGULATORY STANDARDS / REQUIREMENTS SHALL BE IMMEDIATELY BROUGHT TO THE ATTENTION OF ECSD.

ISSUED: 03/01/1994	DEPARTMENT OF PUBLIC UTILITIES STANDARD DETAIL	REVISED: 11/06/2017
DRAWN: EAM	GENERAL NOTES (CONTINUED)	DRAWING NO. G-00.1
APPROVED: XXX		

GENERAL NOTES (CONTINUED):

27. THE CONTRACTOR SHALL BE RESPONSIBLE FOR MAINTAINING THE INTEGRITY OF AND MAKING THE REPAIRS TO EXISTING PAVEMENT, SIDEWALKS, PIPES, CONDUITS, CURBS, CABLES, ETC., WHETHER OR NOT SHOWN ON THE PLANS DAMAGED AS A RESULT OF THE CONTRACTORS OPERATIONS AND/OR THOSE OF HIS SUBCONTRACTORS, AND SHALL RESTORE THEM PROMPTLY AT NO ADDITIONAL EXPENSE TO THE OWNER. CONTRACTOR SHALL REPORT ANY DAMAGE TO SIDEWALK, DRIVEWAY, ETC., PRIOR TO BEGINNING WORK IN ANY AREA.
28. WHERE NEW PAVEMENT MEETS EXISTING, CONNECTION SHALL BE MADE IN A NEAT STRAIGHT LINE AND FLUSH WITH EXISTING PAVEMENT TO MATCH EXISTING CONDITIONS.
29. UNDER NO CIRCUMSTANCES SHALL THE CONTRACTOR LEAVE EXCAVATED TRENCHES, OR PARTS OF, EXPOSED OR OPENED AT THE END OF THE WORKING DAY, WEEKENDS, HOLIDAYS OR OTHER TIMES, WHEN THE CONTRACTOR IS NOT WORKING, UNLESS OTHERWISE DIRECTED. ALL TRENCHES SHALL BE COVERED, FIRMLY SECURED AND MARKED ACCORDINGLY FOR PEDESTRIAN / VEHICULAR TRAFFIC.
30. ALL EXCAVATED MATERIAL REMOVED FROM THIS PROJECT SHALL BE DISPOSED OF OFF THE PROPERTY BY THE CONTRACTOR AT THE CONTRACTOR'S EXPENSE.
31. ALL DUCTILE IRON PRODUCTS SHALL BE DOMESTIC MADE HEAVY DUTY CLASSIFICATION SUITABLE FOR HIGHWAY TRAFFIC LOADS, OR 20,000 LB.
32. ALL GRASSED AREAS AFFECTED BY CONSTRUCTION SHALL BE RE-SODDED.
33. THE CONTRACTOR SHALL BE RESPONSIBLE FOR THE PROVISION, INSTALLATION AND MAINTENANCE OF ALL TRAFFIC CONTROL AND SAFETY DEVICES, IN ACCORDANCE WITH SPECIFICATIONS OF THE LATEST REVISION OF FDOT DESIGN STANDARDS. IN ADDITION, THE CONTRACTOR IS RESPONSIBLE FOR THE RESETTING OF ALL TRAFFIC CONTROL AND INFORMATION SIGNAGE REMOVED DURING THE CONSTRUCTION PERIOD.
34. EXCAVATED OR OTHER MATERIAL STORED ADJACENT TO OR PARTIALLY UPON A ROADWAY PAVEMENT SHALL BE ADEQUATELY MARKED FOR TRAFFIC SAFETY AT ALL TIMES.
35. TEMPORARY PATCH MATERIAL MUST BE ON THE JOB SITE WHENEVER PAVEMENT IS CUT, OR THE CITY'S INSPECTOR WILL SHUT THE JOB DOWN.
36. CONTRACTOR MUST PROVIDE FLASHER ARROW SIGNAL FOR ANY LANE THAT IS CLOSED OR DIVERTED.
37. CONTRACTOR SHALL NOTIFY LAW ENFORCEMENT AND FIRE PROTECTION SERVICES TWENTY-FOUR (24) HOURS IN ADVANCE OF TRAFFIC DETOUR IN ACCORDANCE WITH SECTION 336.07 OF FLORIDA STATUTES.
38. CONTRACTOR TO RESTORE PAVEMENT TO ORIGINAL CONDITION AS REQUIRED.
39. CONTRACTOR SHALL BE RESPONSIBLE FOR PROVIDING DEWATERING PER SPECIFICATION SECTION 02140 DEWATERING.

ISSUED: 03/01/1994	DEPARTMENT OF PUBLIC UTILITIES STANDARD DETAIL	REVISED: 11/06/2017
DRAWN: EAM	GENERAL NOTES (CONTINUED)	DRAWING NO. G-00.2
APPROVED: XXX		

GENERAL NOTES (CONTINUED):

40. THE CONTRACTOR SHALL GIVE AT LEAST 48 HOURS NOTICE TO UTILITY COMPANIES TO PROVIDE FOR THE LOCATION OF EXISTING UNDERGROUND UTILITIES IN ADVANCE OF CONSTRUCTION. CONTACT UTILITIES NOTIFICATION CENTER AT 811 OR 1-800-432-4770 (SUNSHINE ONE-CALL OF FLORIDA).

Always call 811 two full business days before you dig
Sunshine811.com

41. WHEN PVC PIPE IS USED, A METALLIZED MARKER TAPE SHALL BE INSTALLED CONTINUOUSLY 18" ABOVE THE PIPE. THE MARKER TAPE SHOULD BE IMPRINTED WITH A WARNING THAT THERE IS BURIED PIPE BELOW. THE TAPE SHALL BE MAGNA TEC, AS MANUFACTURED BY THOR ENTERPRISES INC. OR APPROVED EQUAL.
42. ALL CONNECTIONS TO EXISTING MAINS SHALL BE THE RESPONSIBILITY OF THE CONTRACTOR. WATER CONNECTIONS SHALL BE METERED, AND THE COST OF WATER AND TEMPORARY METER SHALL BE BORNE BY THE CONTRACTOR.
43. A COMPLETE AS-BUILT SURVEY SHALL BE ACCURATELY RECORDED OF THE UTILITY SYSTEM DURING CONSTRUCTION. AS-BUILT SURVEY SHALL BE SUBMITTED TO ECSD SIGNED AND SEALED BY A FLORIDA REGISTERED SURVEYOR PRIOR TO FINAL INSPECTION AND ACCEPTANCE OF PROJECT. THE COST OF SIGNED AND SEALED AS-BUILTS SHALL BE COVERED IN OVERALL BID. THE AS-BUILT SURVEY SHALL INCLUDE:
    a. PLAN VIEW SHOWING THE HORIZONTAL LOCATIONS OF EACH MANHOLE, INLET, VALVE, FITTING, BEND AND HORIZONTAL PIPE DEFLECTIONS WITH COORDINATES AND IN REFERENCE TO A SURVEY BASELINE OR RIGHT-OF-WAY CENTERLINE.
    b. THE PLAN VIEW SHALL ALSO SHOW SPOT ELEVATIONS OF THE TOP OF THE MAIN (WATER MAIN AND FORCE MAIN) OR PIPE INVERTS (GRAVITY MAINS) AT INTERVALS NOT TO EXCEED 100 FEET AS MEASURED ALONG MAIN. THE PLAN VIEW SHALL ALSO INCLUDE SPOT ELEVATIONS AT EACH MANHOLE, INLET, VALVE, FITTING, BEND AND VERTICAL PIPE DEFLECTION.
    c. THE PLAN VIEW SHALL ALSO SHOW THE HORIZONTAL SEPARATION FROM UNDERGROUND UTILITIES IMMEDIATELY ADJACENT OR PARALLEL TO THE NEW MAIN.
    d. PROFILE VIEW WITH SPOT ELEVATIONS OF THE TOP OF THE MAIN (WATER MAIN AND FORCE MAIN) OR PIPE INVERT (GRAVITY MAIN) AND OF THE FINISHED GRADE OR MANHOLE RIM DIRECTLY ABOVE THE MAIN AT INTERVALS NOT TO EXCEED 100 FEET AS MEASURED ALONG THE MAIN. THE PROFILE VIEW SHALL ALSO INCLUDE SPOT ELEVATIONS AT EACH MANHOLE, INLET, VALVE, FITTING, BEND AND VERTICAL PIPE DEFLECTION.
    e. THE PROFILE VIEW SHALL SHOW ALL UNDERGROUND UTILITIES CROSSING THE NEW MAIN AND THE VERTICAL SEPARATION PROVIDED BETWEEN THAT UNDERGROUND UTILITY AND THE NEW MAIN.
    f. ALL CADD FILES MUST BE CREATED FOLLOWING THE CITY OF HOLLYWOOD "SURVEY / AS-BUILT CAD DRAWING STANDARDS"

ISSUED: 03/01/1994	DEPARTMENT OF PUBLIC UTILITIES STANDARD DETAIL	REVISED: 11/06/2017
DRAWN: EAM	GENERAL NOTES (CONTINUED)	DRAWING NO. G-00.3
APPROVED: XXX		

WATER MAIN SEPARATION IN ACCORDANCE WITH F.A.C. RULE 62-555.314

OTHER PIPE	HORIZONTAL SEPARATION	CROSSING (1), (4)	JOINT SPACING @ CROSSING (FULL JOINT CENTERED) (8)
STORM SEWER, STORM WATER FORCE MAIN, RECLAIMED WATER (2)	WATER MAIN; 3 ft minimum	WATER MAIN; 12 inches is the minimum except for storm sewer, then 6 inches is the minimum and 12 inched is preferred	Alternate 3 ft minimum; WATER MAIN
GRAVITY SANITARY SEWER, (3) SANITARY SEWER FORCE MAIN, RECLAIMED WATER	WATER MAIN; 10 ft prefered 6 ft minimum	WATER MAIN; 12 inches is the minimum except for gravity sewer, then 6 inches is the minimum and 12 inched is preferred	Alternate 6 ft minimum; WATER MAIN
ON-SITE SEWAGE TREATMENT & DISPOSAL SYSTEM	10 ft minimum	———	———

1. WATER MAIN SHOULD CROSS ABOVE OTHER PIPE, WHEN WATER MAIN MUST BE BELOW OTHER PIPE, THE MINIMUM SEPARATION IS 12 INCHES.
2. RECLAIMED WATER REGULATED UNDER PART III OF CHAPTER 62-610, F.A.C.
3. 3 FT. FOR GRAVITY SANITARY SEWER WHERE THE BOTTOM OF THE WATER MAIN IS LAID AT LEAST 6 INCHES ABOVE THE TOP OF THE GRAVITY SANITARY SEWER.
4. 18" VERTICAL MINIMUM SEPARATION REQUIRED BY CITY OF HOLLYWOOD, UNLESS OTHERWISE APPROVED.
5. A MINIMUM 6 FOOT HORIZONTAL SEPARATION SHALL BE MAINTAINED BETWEEN ANY TYPE OF SEWER AND WATER MAIN IN PARALLEL INSTALLATIONS WHENEVER POSSIBLE.
6. IN CASES WHERE IT IS NOT POSSIBLE TO MAINTAIN A 10 FOOT HORIZONTAL SEPARATION, THE WATER MAIN MUST BE LAID IN A SEPARATE TRENCH OR ON AN UNDISTURBED EARTH SHELF LOCATED ON ONE SIDE OF THE SEWER OR FORCE MAIN AT SUCH AN ELEVATION THAT THE BOTTOM OF THE WATER MAIN IS AT LEAST 18 INCHES ABOVE THE TOP OF THE SEWER.
7. WHERE IT IS NOT POSSIBLE TO MAINTAIN A VERTICAL DISTANCE OF 18 INCHES IN A PARALLEL INSTALLATIONS, THE WATER MAIN SHALL BE CONSTRUCTED OF DIP AND THE SANITARY SEWER OR FORCE MAIN SHALL BE CONSTRUCTED OF DIP WITH A MINIMUM VERTICAL DISTANCE OF 6 INCHES. THE WATER MAIN SHOULD ALWAYS BE ABOVE THE SEWER. JOINTS ON THE WATER MAIN SHALL BE LOCATED AS FAR APART AS POSSIBLE FROM JOINTS ON THE SEWER OR FORCE MAIN (STAGGERED JOINTS).
8. ALL JOINTS ON THE WATER MAIN WITHIN 20 FEET OF THE CROSSING MUST BE MECHANICALY RESTRAINED.

ISSUED: 03/01/1994	DEPARTMENT OF PUBLIC UTILITIES STANDARD DETAIL	REVISED: 11/06/2017
DRAWN: EAM	SEPARATION REQUIREMENTS OF F.D.E.P.	DRAWING NO. G-01.1
APPROVED: XXX		

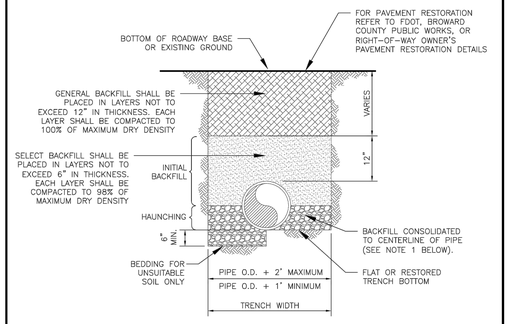

NOTES:

1. WHEN PIPE INSTALLATION IS ABOVE THE GROUND WATER TABLE ELEVATION, OR WHENEVER BEDDING COPPER PIPE UNDER ANY CONDITION, BEDDING MATERIAL SHALL BE CLEAN SANDY SOIL IF AVAILABLE WITHIN THE LIMITS OF CONSTRUCTION. IMPORTED BEDDING SHALL BE WELL GRADED, WASHED CRUSHED STONE (OR DRAINFIELD LIMEROCK). CRUSHED STONE SHALL CONSIST OF HARD, DURABLE, SUB-ANGULAR PARTICLES OF PROPER SIZE AND GRADATION, AND SHALL BE FREE FROM ORGANIC MATERIAL, WOOD, TRASH, SAND, LOAM, CLAY, EXCESS FINES, AND OTHER DELETERIOUS MATERIALS.
2. ALL BEDDING MATERIAL SHALL BE COMPACTED TO 95% OF MAXIMUM DENSITY BEFORE ANY PIPE IS LAID. FOR ADDITIONAL MATERIAL SPECIFICATIONS REFER TO SPECIFICATION SECTION 02222, "EXCAVATION AND BACKFILL FOR UTILITIES".
3. DENSITY TESTING SHALL BE IN ACCORDANCE WITH AASHTO T-180 AND ASTM D-3017.
4. BACKFILL TO COMPLY WITH FDOT DESIGN STANDARDS 125-8.

ISSUED: 03/01/1994	DEPARTMENT OF PUBLIC UTILITIES STANDARD DETAIL	REVISED: 06/08/2014
DRAWN: EAM	PIPE LAYING CONDITION TYPICAL SECTION (D.I.P.)	DRAWING NO. G-02
APPROVED: XXX		

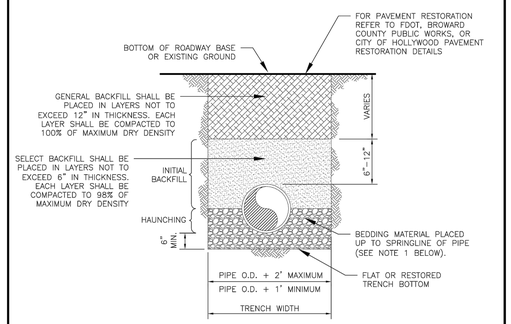

NOTES:

1. WHEN PIPE INSTALLATION IS ABOVE THE GROUND WATER TABLE ELEVATION, OR WHENEVER BEDDING COPPER PIPE UNDER ANY CONDITION, BEDDING MATERIAL SHALL BE CLEAN SANDY SOIL IF AVAILABLE WITHIN THE LIMITS OF CONSTRUCTION. IMPORTED BEDDING SHALL BE WELL GRADED, WASHED CRUSHED STONE (OR DRAINFIELD LIMEROCK). CRUSHED STONE SHALL CONSIST OF HARD, DURABLE, SUB-ANGULAR PARTICLES OF PROPER SIZE AND GRADATION, AND SHALL BE FREE FROM ORGANIC MATERIAL, WOOD, TRASH, SAND, LOAM, CLAY, EXCESS FINES, AND OTHER DELETERIOUS MATERIALS.
2. ALL BEDDING MATERIAL SHALL BE COMPACTED TO 95% OF MAXIMUM DENSITY BEFORE ANY PIPE IS LAID. FOR ADDITIONAL MATERIAL SPECIFICATIONS REFER TO SPECIFICATION SECTION 02222, "EXCAVATION AND BACKFILL FOR UTILITIES".
3. DENSITY TESTING SHALL BE IN ACCORDANCE WITH AASHTO T-180 AND ASTM D-3017.
4. BACKFILL TO COMPLY WITH FDOT DESIGN STANDARD 125-8.

ISSUED: 03/01/1994	DEPARTMENT OF PUBLIC UTILITIES STANDARD DETAIL	REVISED: 06/08/2014
DRAWN: EAM	PIPE LAYING CONDITION TYPICAL SECTION (P.V.C.)	DRAWING NO. G-03
APPROVED: XXX		

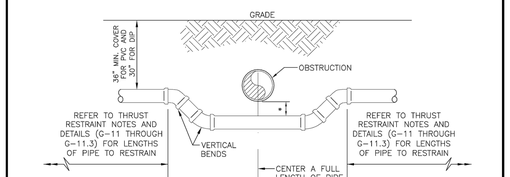

UTILITY CROSSING USING FITTINGS

* REFER TO STANDARD DETAIL G-01.1, "SEPARATION REQUIREMENTS", FOR FDEP AND HEALTH DEPARTMENT SEPARATION REQUIREMENTS.

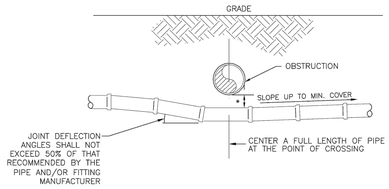

UTILITY CROSSING USING JOINT DEFLECTIONS

* REFER TO STANDARD DETAIL G-01.1, "SEPARATION REQUIREMENTS", FOR FDEP AND HEALTH DEPARTMENT SEPARATION REQUIREMENTS.

ISSUED: 03/01/1994	DEPARTMENT OF PUBLIC UTILITIES STANDARD DETAIL	REVISED: 06/08/2014
DRAWN: EAM	UTILITY CROSSING DETAIL	DRAWING NO. G-04
APPROVED: XXX		

CHAD E. EDWARDS, STATE OF FLORIDA PROFESSIONAL ENGINEER, LICENSE NO. 59306
THIS ITEM HAS BEEN DIGITALLY SIGNED AND SEALED BY CHAD E. EDWARDS ON THE DATE INDICATED HERE.
PRINTED COPIES OF THIS DOCUMENT ARE NOT CONSIDERED SIGNED AND SEALED AND THE SIGNATURE MUST BE VERIFIED ON ANY ELECTRONIC COPIES

DATE: 03/17/23
SCALE: 1"=20'
DESIGN BY: LZG
DRAWN BY: LZG
CHECKED BY: CEE
APPROVED BY: CEE

BY:	DESCRIPTION:	DATE:

CRAVEN • THOMPSON AND ASSOCIATES, INC.
ENGINEERS • PLANNERS • SURVEYORS
3563 N.W. 53RD STREET, FORT LAUDERDALE, FLORIDA 33309
FAX: (954) 739-6409 TEL: (954) 739-6400
FLORIDA LICENSED ENGINEERING, SURVEYING & MAPPING BUSINESS No. 271
FLORIDA LICENSED LANDSCAPE ARCHITECTURE BUSINESS No. 0000314

MATERIAL SHOWN HEREON IS THE PROPERTY OF CRAVEN, THOMPSON & ASSOCIATES, INC. AND SHALL NOT BE REPRODUCED IN WHOLE OR IN PART WITHOUT WRITTEN PERMISSION OF CRAVEN•THOMPSON & ASSOCIATES, INC. ©COPYRIGHT CTA 2014

SOLESTE LA PIAZZA
HOLLYWOOD, FLORIDA

PREPARED FOR:
THE ESTATES COMPANIES

WATER AND SEWER DETAILS

Chad E. Edwards
Florida P.E. No. 59306

22-0064-001-01

C-11
SHEET 11 OF 17

R: \Engineering\2022\22-0064-001-01 La Piazza\Drawings\22-0064 WSDT.dwg [C-11] Mar 17, 2023 4:02pm RBURKERT

RESILIENT SEATED GATE VALVE SPECIFICATIONS:

4" THROUGH 12" SIZE
(WATER AND FORCE MAIN)

1. GATE VALVES SHALL BE RESILIENT SEATED, MANUFACTURED TO MEET OR EXCEED THE REQUIREMENTS OF AWWA C509 (LATEST REVISION) AND IN ACCORDANCE WITH THE FOLLOWING SPECIFICATIONS:

1.1. VALVES SHALL HAVE AN UNOBSTRUCTED WATERWAY EQUAL TO OR GREATER THAN THE FULL NOMINAL DIAMETER OF THE VALVE.

1.2. THE VALVES ARE TO BE NON-RISING STEM WITH THE STEM MADE OF CAST, FORGED OR ROLLED BRONZE SHOWN IN AWWA C509, TWO STEM SEALS SHALL BE PROVIDED AND SHALL BE OF THE O-RING TYPE, ONE ABOVE AND ONE BELOW THE THRUST COLLAR WITH LUBRICANT BETWEEN O-RING.

1.3. THE STEM NUT, ALSO MADE OF BRONZE, MAY BE INDEPENDENT OF THE GATE OR CAST INTEGRALLY WITH THE GATE. IF THE STEM NUT IS CAST INTEGRALLY, THE THREADS SHALL BE STRAIGHT AND TRUE WITH THE AXIS OF THE STEM TO AVOID BINDING DURING THE OPENING OR CLOSING CYCLE.

1.4. THE SEALING MECHANISM SHALL CONSISTS OF A CAST IRON GATE HAVING A VULCANIZED SYNTHETIC RUBBER COATING OR A RUBBER SEAT MECHANICALLY RETAINED ON THE GATE, THE RESILIENT SEALING MECHANISM SHALL PROVIDE ZERO LEAKAGE AT THE WATER WORKING PRESSURE WHEN INSTALLED WITH THE LINE FLOW IN EITHER DIRECTION.

1.5. A 2-INCH SQUARE WRENCH NUT SHALL BE PROVIDED FOR OPERATING THE VALVE.

1.6. ALL VALVES ARE TO BE SUPPLIED COMPLETE AND READY FOR INSTALLATION INCLUDING, BUT NOT LIMITED TO ALL NUTS, BOLTS RINGS AND RUBBERS.

1.7. ALL VALVES ARE TO BE TESTED IN STRICT ACCORDANCE WITH AWWA C509 LATEST REVISION).

ISSUED: 03/01/1994	DEPARTMENT OF PUBLIC UTILITIES STANDARD DETAIL	REVISED: 06/08/2014
DRAWN: EAM	RESILIENT SEATED GATE VALVE SPECIFICATIONS	DRAWING NO. G-07.1
APPROVED: XXX		

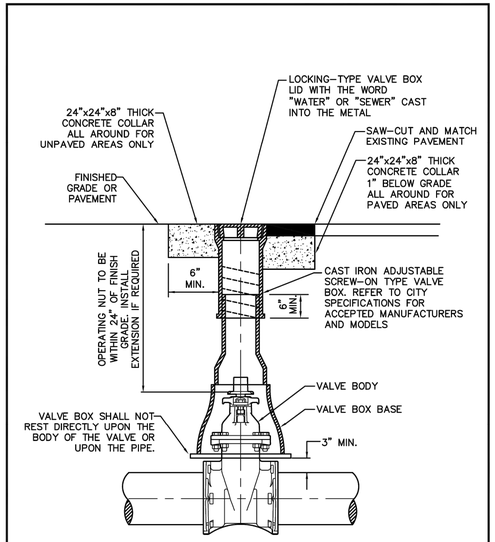

ISSUED: 03/01/1994	DEPARTMENT OF PUBLIC UTILITIES STANDARD DETAIL	REVISED: 06/08/2014
DRAWN: EAM	TYPICAL VALVE BOX SETTING	DRAWING NO. G-05
APPROVED: XXX		

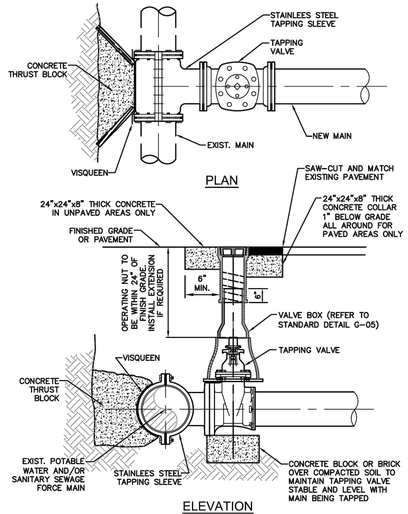

NOTES:
1. NOTIFY THE CITY OF HOLLYWOOD 48 HOURS IN ADVANCE OF PROPOSED TAP.
2. TAPPING MUST BE DONE IN THE PRESENCE OF AN AUTHORIZED CITY REPRESENTATIVE.
3. TEMPORARY THRUST BLOCKS TO BE INSTALLED AND REMAIN IN PLACE DURING TAPPING OPERATIONS.
4. FOR SEWAGE FORCE MAINS, REFER TO DETAIL OF PRIVATE FORCE MAIN TIE-IN AT PROPERTY LINE.
5. FOR WATER MAINS, A GATE VALVE OF SAME DIAMETER SHALL BE INSTALLED ON THE DOWNSTREAM SIDE OF THE TAPPING VALVE.

ISSUED: 03/01/1994	DEPARTMENT OF PUBLIC UTILITIES STANDARD DETAIL	REVISED: 06/08/2014
DRAWN: EAM	TYPICAL TAPPING SLEEVE AND VALVE SETTING	DRAWING NO. G-06
APPROVED: XXX		

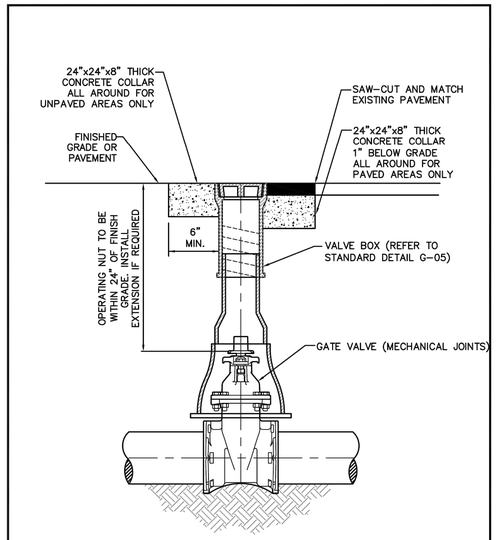

ISSUED: 03/01/1994	DEPARTMENT OF PUBLIC UTILITIES STANDARD DETAIL	REVISED: 06/08/2014
DRAWN: EAM	TYPICAL GATE VALVE AND VALVE BOX SETTING	DRAWING NO. G-07
APPROVED: XXX		

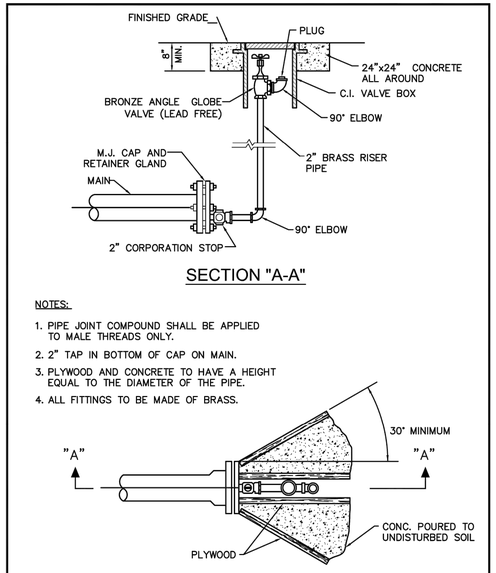

NOTES:
1. PIPE JOINT COMPOUND SHALL BE APPLIED TO MALE THREADS ONLY.
2. 2" TAP IN BOTTOM OF CAP ON MAIN.
3. PLYWOOD AND CONCRETE TO HAVE A HEIGHT EQUAL TO THE DIAMETER OF THE PIPE.
4. ALL FITTINGS TO BE MADE OF BRASS.

ISSUED: 03/01/1994	DEPARTMENT OF PUBLIC UTILITIES STANDARD DETAIL	REVISED: 11/06/2017
DRAWN: EAM	TERMINAL BLOW-OFF DETAIL	DRAWING NO. G-09
APPROVED: XXX		

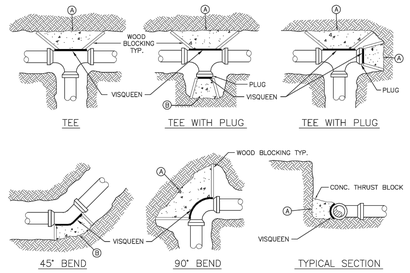

MINIMUM CONCRETE THRUST BLOCKING BEARING ON UNDISTURBED MATERIAL (SQ. FT.)				
MARK	PIPE SIZE			
	4" OR 6"	8"	10"	12"
A				
B				

NOTES:
1. THRUST BLOCKS ARE TO BE USED IN COMBINATION WITH, AND NOT IN LIEU OF, MECHANICAL JOINT RESTRAINTS AS REQUIRED BY THE CITY. REFER TO THRUST RESTRAINT DESIGN TABLE IN STANDARD DETAIL G-10.
2. THE AREAS IN THE TABLE ARE BASED ON _____ POUNDS PER SQUARE FOOT SOIL BEARING AGAINST THE UNDISTURBED TRENCH WALL AND ARE TO REPRESENT THE MINIMUM VERTICAL PROJECTED AREA AT THE THRUST BLOCK IN A PLANE PERPENDICULAR TO THE LINE BISECTING THE INCLUDING ANGLE OF THE FITTING.
3. POUR THRUST BLOCKS AGAINST UNDISTURBED MATERIAL. WHERE TRENCH WALL HAS BEEN DISTURBED, EVACUATE LOOSE MATERIAL AND EXTEND THRUST BLOCK TO UNDISTURBED MATERIAL.
4. ON BENDS AND TEES, EXTEND THRUST BLOCKS FULL LENGTH OF FITTING.
5. DO NOT COVER COUPLING OR JOINTS WITH CONCRETE.
6. CONCRETE TO BE 2500 P.S.I. MINIMUM 28 DAY STRENGTH.
7. TABLE TO BE COMPLETED BY DESIGN ENGINEER.

ISSUED: 03/01/1994	DEPARTMENT OF PUBLIC UTILITIES STANDARD DETAIL	REVISED: 06/08/2014
DRAWN: EAM	THRUST BLOCK DESIGN	DRAWING NO. G-10
APPROVED: XXX		

THRUST RESTRAINT NOTES:

1. ALL JOINTS BETWEEN BENDS AT HORIZONTAL & VERTICAL OFFSETS SHALL BE RESTRAINED.
2. MECHANICAL THRUST RESTRAINTS FOR D.I.P. FITTINGS ON D.I.P. OR P.V.C. PIPE SHALL BE MEGALUG AS MANUFACTURED BY EBAA IRON, INC., OR APPROVED EQUAL.
3. DUCTILE IRON FITTINGS UP TO 20-INCHES IN DIAMETER SHALL BE RESTRAINED BY MECHANICAL MEANS, I.E., MEGALUGS OR APPROVED EQUAL.
4. DUCTILE IRON FITTINGS 24-INCH IN DIAMETER AND ABOVE SHALL BE RESTRAINED BY MECHANICAL MEANS, I.E., MEGALUGS OR APPROVED EQUAL, WITH THE ADDITION OF THRUST BLOCKS AND CONCRETE ANCHORS AT THE DISCRETION OF THE ENGINEER OF RECORD.
5. ANY THRUST BLOCKS AND ANCHORS ARE TO BE DESIGNED BY THE ENGINEER OF RECORD. SIGNED AND SEALED CALCULATIONS SHALL BE SUBMITTED TO THE CITY FOR APPROVAL PRIOR TO INSTALLATION.
6. THRUST BLOCKS CONSISTING OF POURED-IN-PLACE CONCRETE SHALL HAVE A MINIMUM COMPRESSIVE STRENGH OF 2,500 PSI AFTER 28 DAYS.

ISSUED: 03/01/1994	DEPARTMENT OF PUBLIC UTILITIES STANDARD DETAIL	REVISED: 06/08/2014
DRAWN: EAM	JOINT RESTRAINT DESIGN FOR PVC AND DIP THRUST RESTRAINT NOTES	DRAWING NO. G-11
APPROVED: XXX		

HORIZONTAL BENDS			
PIPE DIA. (INCHES)	BEND (ANGLE)	RESTRAINED LENGTH (RL) (FT)	
		PVC	*DIP
24	11¼	.	.
	22½	.	.
	45	.	.
	90	.	.
16	11¼	.	.
	22½	.	.
	45	.	.
	90	.	.
12	11¼	.	.
	22½	.	.
	45	.	.
	90	.	.
8	11¼	.	.
	22½	.	.
	45	.	.
	90	.	.
6	11¼	.	.
	22½	.	.
	45	.	.
	90	.	.
4	11¼	.	.
	22½	.	.
	45	.	.
	90	.	.

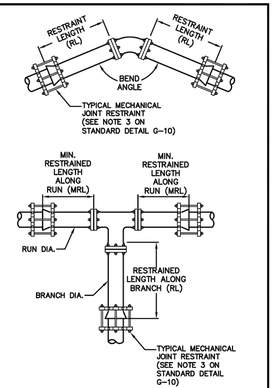

TEES AND TAPPING SLEEVES							
RUN DIA. (INCHES)	BRANCH DIA. (INCHES)	MINIMUM RESTRAINED LENGTH ALONG RUN (FT.)	MINIMUM RESTRAINED LENGTH ALONG BRANCH (FT.)		RUN DIA. (INCHES)	BRANCH DIA. (INCHES)	MINIMUM RESTRAINED LENGTH ALONG RUN (FT.)	MINIMUM RESTRAINED LENGTH ALONG BRANCH (FT.)	
			PVC	*DIP				PVC	*DIP
24"	24"	.	.	.	12"	12"	.	.	.
	16"	.	.	.		8"	.	.	.
	12"	.	.	.		6"	.	.	.
	8"	.	.	.		4"	.	.	.
	6"	.	.	.	8"	8"	.	.	.
	4"	.	.	.		6"	.	.	.
16"	16"	.	.	.		4"	.	.	.
	12"	.	.	.	6"	6"	.	.	.
	8"	.	.	.		4"	.	.	.
	6"	.	.	.	4"	4"	.	.	.
	4"	.	.	.			.	.	.

*ALL DIP JOINT-RESTRAINT CALCULATIONS ASSUME THE PIPE WILL BE WRAPPED IN POLYETHYLENE ENCASEMENT

ISSUED: 03/01/1994	DEPARTMENT OF PUBLIC UTILITIES STANDARD DETAIL	REVISED: 06/08/2014
DRAWN: EAM	JOINT RESTRAINT DESIGN FOR PVC AND DIP HORIZONTAL BENDS AND TEES	DRAWING NO. G-11.1
APPROVED: XXX		

CHAD E. EDWARDS, STATE OF FLORIDA
PROFESSIONAL ENGINEER, LICENSE NO. 59306
THIS ITEM HAS BEEN DIGITALLY SIGNED AND SEALED BY CHAD E. EDWARDS ON THE DATE INDICATED HERE.
PRINTED COPIES OF THIS DOCUMENT ARE NOT CONSIDERED SIGNED AND SEALED AND THE SIGNATURE MUST BE VERIFIED ON ANY ELECTRONIC COPIES

DATE: 03/17/23
SCALE: 1"=20'
DESIGN BY: LZG
DRAWN BY: LZG
CHECKED BY: CEE
APPROVED BY: CEE

BY:	DATE:	DESCRIPTION:

CRAVEN • THOMPSON AND ASSOCIATES, INC.
ENGINEERS • PLANNERS • SURVEYORS
3563 N.W. 53RD STREET, FORT LAUDERDALE, FLORIDA 33309
FAX: (954) 739-6409 TEL: (954) 739-6400
FLORIDA LICENSED ENGINEERING, SURVEYING & MAPPING BUSINESS No. 271
FLORIDA LICENSED LANDSCAPE ARCHITECTURE BUSINESS No. C000314

MATERIAL SHOWN HEREON IS THE PROPERTY OF CRAVEN, THOMPSON & ASSOCIATES, INC. AND SHALL NOT BE REPRODUCED IN WHOLE OR IN PART WITHOUT WRITTEN PERMISSION OF CRAVEN•THOMPSON & ASSOCIATES, INC. COPYRIGHT © 2014

SOLESTE LA PIAZZA
HOLLYWOOD, FLORIDA
PREPARED FOR:
THE ESTATES COMPANIES

WATER AND SEWER DETAILS

Chad E. Edwards
Florida P.E. No. 59306

22-0064-001-01

C-12

SHEET 12 OF 17

R:\Engineering\2022\22-0064-001-01 La Piazza\Drawings\22-0064 WSD1.dwg [C-12] Mar 17, 2023 4:03pm RBURKERT

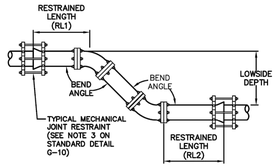

VERTICAL OFFSETS						
			PVC		*DIP	
PIPE DIA. (INCHES)	BEND (ANGLE)	LOWSIDE DEPTH (FT)	RESTRAINED LENGTHS RL1 (FT.)	RL2 (FT.)	RESTRAINED LENGTHS RL1 (FT.)	RL2 (FT.)
24	45	4	.	.	.	.
		5	.	.	.	.
		6	.	.	.	.
		7	.	.	.	.
16	45	4	.	.	.	.
		5	.	.	.	.
		6	.	.	.	.
		7	.	.	.	.
12	45	4	.	.	.	.
		5	.	.	.	.
		6	.	.	.	.
		7	.	.	.	.
8	45	4	.	.	.	.
		5	.	.	.	.
		6	.	.	.	.
		7	.	.	.	.
6	45	4	.	.	.	.
		5	.	.	.	.
		6	.	.	.	.
		7	.	.	.	.
4	45	4	.	.	.	.
		5	.	.	.	.
		6	.	.	.	.
		7	.	.	.	.

*ALL DIP JOINT–RESTRAINT CALCULATIONS ASSUME THE PIPE WILL BE WRAPPED IN POLYETHYLENE ENCASEMENT

ISSUED: 03/01/1994	DEPARTMENT OF PUBLIC UTILITIES STANDARD DETAIL	REVISED: 06/08/2014
DRAWN: EAM	JOINT RESTRAINT DESIGN FOR PVC AND DIP VERTICAL OFFSETS	DRAWING NO. G-11.2
APPROVED: XXX		

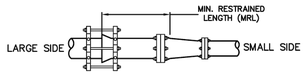

REDUCERS							
LARGE SIDE	SMALL SIDE	MINIMUM LENGTH TO RESTRAIN ON LARGE SIDE (FT) PVC	*DIP	LARGE SIDE	SMALL SIDE	MINIMUM LENGTH TO RESTRAIN ON LARGE SIDE (FT) PVC	*DIP
24"	16"	.	.	12"	8"	.	.
	12"	.	.		6"	.	.
	8"	.	.		4"	.	.
	6"	.	.	8"	6"	.	.
	4"	.	.		4"	.	.
16"	12"	.	.		2"	.	.
	8"	.	.	6"	4"	.	.
	6"	.	.		2"	.	.
	4"	.	.	4"	2"	.	.

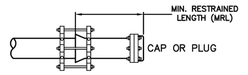

DEAD ENDS	
PIPE DIA. (INCHES)	MIN. RESTRAINED LENGTH (FT) PVC	*DIP
24"	.	.
16"	.	.
12"	.	.
8"	.	.
6"	.	.
4"	.	.

*ALL DIP JOINT–RESTRAINT CALCULATIONS ASSUME THE PIPE WILL BE WRAPPED IN POLYETHYLENE ENCASEMENT

ISSUED: 03/01/1994	DEPARTMENT OF PUBLIC UTILITIES STANDARD DETAIL	REVISED: 06/08/2014
DRAWN: EAM	JOINT RESTRAINT DESIGN FOR PVC AND DIP REDUCERS AND DEAD ENDS	DRAWING NO. G-11.3
APPROVED: XXX		

FLEXIBLE PAVEMENT RESTORATION NOTES:

1. THE ABOVE DETAILS APPLY ONLY TO ASPHALT PAVEMENT RESTORATION OVER UTILITY TRENCHES CUT WITHIN CITY OF HOLLYWOOD RIGHTS-OF-WAY. FOR PAVEMENT RESTORATION WITHIN BROWARD COUNTY OR FDOT RIGHTS-OF-WAY REFER TO THE CORRESPONDING DETAILS FOR THOSE AGENCIES.
2. LIMEROCK BASE MATERIAL SHALL HAVE A MINIMUM L.B.R. OF 100 AND A MINIMUM CARBONATE CONTENT OF 70%. REPLACED BASE MATERIAL OVER TRENCH SHALL BE A MINIMUM OF 12" THICK".
3. LIMEROCK BASE MATERIAL SHALL BE PLACED IN 12" MAXIMUM (LOOSE MEASUREMENT) THICKNESS LAYERS WITH EACH LAYER THOROUGHLY ROLLED OR TAMPED AND COMPACTED TO 100% OF MAXIMUM DENSITY, PER AASHTO T-180, PRIOR TO THE PLACEMENT OF THE SUCCEEDING LAYERS.
4. STABILIZED SUBGRADE MATERIAL SHALL BE GRANULAR AND SHALL HAVE A MINIMUM L.B.R. OF 40.
5. BACKFILL SHALL BE PLACED AND COMPACTED IN ACCORDANCE WITH THE PIPE LAYING CONDITION TYPICAL SECTIONS IN DETAILS G-02 AND G-03, AND THE SPECIFICATIONS, BUT TESTING WILL BEGIN 12" ABOVE THE INSTALLED FACILITY.
6. ALL EDGES AND JOINTS OF EXISTING ASPHALT PAVEMENT SHALL BE SAW CUT TO STRAIGHT LINES, PARALLEL TO OR PERPENDICULAR TO THE ROADWAY, PRIOR TO THE RESURFACING.
7. RESURFACING MATERIAL SHALL BE FDOT SUPERPAVE, AND SHALL BE APPLIED A MINIMUM OF TWO INCH IN THICKNESS.
8. MILL AND BUTT JOINT TO EXISTING PAVEMENT.
9. IF THE TRENCH IS FILLED TEMPORARILY, IT SHALL BE COVERED WITH A 2" ASPHALTIC CONCRETE PATCH TO KEEP THE FILL MATERIAL FROM RAVELING UNTIL REPLACED WITH A PERMANENT PATCH.
10. REFER TO SPECIFICATIONS FOR DETAILED PROCEDURES.
11. WHERE THE UTILITY TRENCH CROSSES EXISTING ASPHALT DRIVEWAYS, THE LIMEROCK BASE THICKNESS MAY BE A MINIMUM OF 6 INCHES THICK. REGARDLESS OF THE EXTENT OF IMPACT, THE ENTIRE DRIVEWAY SURFACE BETWEEN THE EDGE OF THE ROADWAY PAVEMENT AND PROPERTY LINE OR FRONT OF SIDEWALK SHALL BE OVERLAID USING 2-INCH THICK MINIMUM ASPHALTIC CONCRETE SURFACE COURSE WHERE INDICATED ON THE PLANS OR AS DIRECTED BY THE CITY/ENGINEER.

ISSUED: 03/01/1994	DEPARTMENT OF PUBLIC UTILITIES STANDARD DETAIL	REVISED: 11/06/2017
DRAWN: EAM	FLEXIBLE PAVEMENT RESTORATION NOTES	DRAWING NO. G-12
APPROVED: XXX		

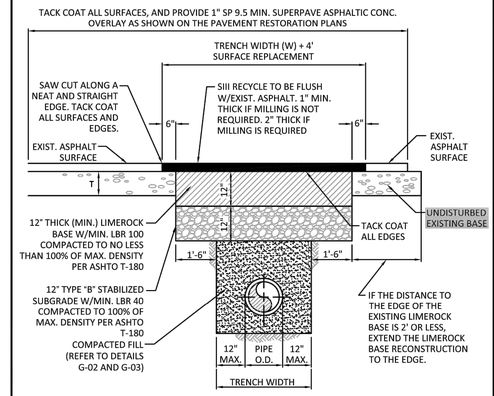

ISSUED: 03/01/1994	DEPARTMENT OF PUBLIC UTILITIES STANDARD DETAIL	REVISED: 11/06/2017
DRAWN: EAM	FLEXIBLE PAVEMENT RESTORATION FOR TRENCHES CUT PERPENDICULAR AND PARALLEL TO THE ROADWAY	DRAWING NO. G-12.1
APPROVED: XXX		

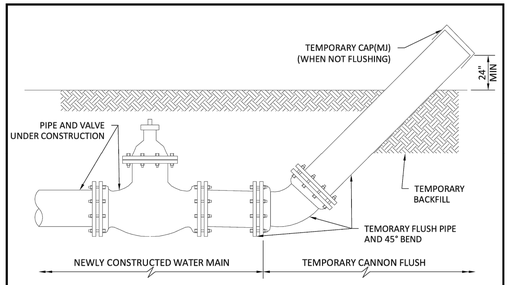

GENERAL NOTES:

1. FLUSHING LOCATIONS ARE TO BE PROPOSED BY CONTRACTOR AND APPROVED BY CITY.
2. UPON COMPLETION OF THE PIPE INSTALLATION FOR ANY SECTION, THE MAIN SHALL BE CANNON FLUSHED TO REMOVE DIRT AND ANY OTHER FOREIGN MATTER.
3. INSTALL A TEMPORARY 45° BEND AND ASSOCIATED TEMPORARY PIPING AS SHOWN TO DIRECT THE FLUSHING WATER AWAY FROM THE IMMEDIATE WORK AREA AND EXERCISE DUE CARE SO AS TO ENSURE THAT THE WATER USED IN FLUSHING DOES NOT CAUSE A NUISANCE OR INFLICT PROPERTY DAMAGE.
4. BENDS AND PIPING SHALL BE THE SAME SIZE OR LARGER AS THE LINE BEING FLUSHED.
5. PRIOR TO THE ACTUAL LINE FLUSHING OPERATION THE CONTRACTOR SHALL PROPERLY NOTIFY CITY INSPECTOR OF SUCH INTENDED WATER USE.
6. NO EXISTING VALVE SHALL BE OPERATED, EXCEPT BY AUTHORIZED CITY PERSONNEL.
7. FLUSHING SHALL NOT BE ACCOMPLISHED WITHOUT THE ACTUAL PRESENCE OF THE CITY INSPECTOR.
8. AFTER THE LINE UNDER CONSTRUCTION HAS BEEN SUCCESSFULLY FLUSHED, THE CONTRACTOR SHALL REMOVE THE TEMPORARY PIPING ARRANGEMENT AND PROCEED WITH THE REMAINING CONSTRUCTION AS SPECIFIED.
9. ALL PIPING SHALL BE MECHANICALLY RESTRAINED IN ACCORDANCE WITH CITY STANDARDS.
10. IF REQUIRED BY CITY, WATER MAINS SHALL BE CLEANED BY PIGGING.
11. CONTRACTOR WILL INSTALL A PRESSURE GAUGE AT OR NEAR THE FILL AND FLUSH LOCATION AND MAINTAIN A MINIMUM PRESSURE OF 40 PSI AT ALL TIMES. THE FILL VALVE WILL BE OPENED AND CLOSED SLOWLY TO AVOID RAPID PRESSURE CHANGES IN THE WATER SYSTEM.
12. CONTRACTOR IS CAUTIONED THAT GOVERNING AGENCIES OR UTILITIES MAY HAVE REGULATIONS LIMITING OR PROHIBITING DISCHARGE INTO SEWERS, SURFACE WATERS, CANALS, DITCHES AND OTHER CONVEYANCES/RETENTION AREA. ALL COMPLIANCE WITH GOVERNING AGENCIES REQUIREMENTS (INCLUDING PERMITTING, IF REQUIRED) IS THE SOLE RESPONSIBILITY OF THE CONTRACTOR.
13. CANNON FLUSHING TO PROCEED AFTER HEALTH DEPARTMENT CLEARANCE IS RECEIVED.

ISSUED: 03/01/1994	DEPARTMENT OF PUBLIC UTILITIES STANDARD DETAIL	REVISED: 06/08/2014
DRAWN: EAM	CANNON FLUSHING	DRAWING NO. G-13
APPROVED: XXX		

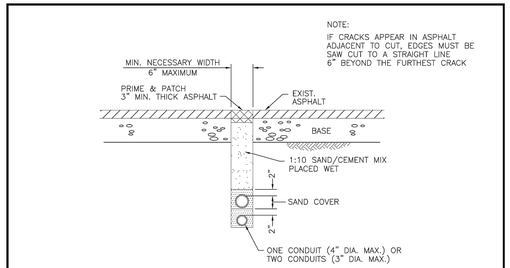

DETAIL "A"

MINIMUM UTILITY CROSSING OF ROADWAY

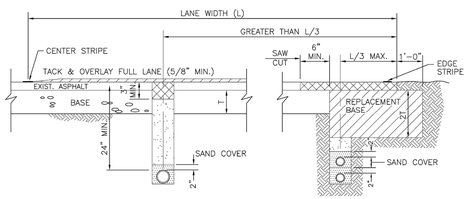

DETAIL "B" DETAIL "C"

MINIMUM PARALLEL UTILITY INSTALLATION

NOTE:
DETAILS NOT SHOWN
SHALL BE AS PER DETAIL "A"

ISSUED: 03/01/1994	DEPARTMENT OF PUBLIC UTILITIES STANDARD DETAIL	REVISED: 06/08/2014
DRAWN: EAM	FLEXIBLE PAVEMENT RESTORATION FOR CONDUIT	DRAWING NO. G-12.2
APPROVED: XXX		

DATE:	03/17/23
SCALE:	1"=20'
DESIGN BY:	LZG
DRAWN BY:	LZG
CHECKED BY:	CEE
APPROVED BY:	CEE

BY:	DESCRIPTION:	DATE:

CRAVEN • THOMPSON AND ASSOCIATES, INC.
ENGINEERS • PLANNERS • SURVEYORS
3563 N.W. 53RD STREET, FORT LAUDERDALE, FLORIDA 33309
FAX: (954) 739-6409 TEL: (954) 739-6400
FLORIDA LICENSED ENGINEERING, SURVEYING & MAPPING BUSINESS No. 271
FLORIDA LICENSED LANDSCAPE ARCHITECTURE BUSINESS No. C000314

MATERIAL SHOWN HEREON IS THE PROPERTY OF CRAVEN, THOMPSON & ASSOCIATES, INC. AND SHALL NOT BE REPRODUCED IN WHOLE OR IN PART WITHOUT WRITTEN PERMISSION OF CRAVEN•THOMPSON & ASSOCIATES, INC. COPYRIGHT © 2019

SOLESTE LA PIAZZA
HOLLYWOOD, FLORIDA

PREPARED FOR:
THE ESTATES COMPANIES

WATER AND SEWER DETAILS

Chad E. Edwards
Florida P.E. No. 59306

22-0064-001-01

C-13

SHEET 13 OF 17

CHAD E. EDWARDS, STATE OF FLORIDA
PROFESSIONAL ENGINEER, LICENSE NO. 59306
THIS ITEM HAS BEEN DIGITALLY SIGNED AND SEALED BY CHAD E. EDWARDS ON THE DATE INDICATED HERE.
PRINTED COPIES OF THIS DOCUMENT ARE NOT CONSIDERED SIGNED AND SEALED AND THE SIGNATURE MUST BE VERIFIED ON ANY ELECTRONIC COPIES

R:\Engineering\2022\22-0064-001-01 La Piazza\Drawings\22-0064 WSDT.dwg [C-13] Mar 17, 2023 4:03pm RBURKERT

SEWER NOTES:

1. THE MINIMUM DEPTH OF COVER OVER D.I.P. SANITARY SEWER GRAVITY OR FORCE MAINS IS 30". THE MINIMUM DEPTH OF COVER OVER PVC SANITARY SEWER OR FORCE MAINS IS 36".
2. ALL CONNECTIONS TO EXISTING MAINS SHALL BE THE RESPONSIBILITY OF THE CONTRACTOR.
3. LEAKAGE TESTS AND ALIGNMENT (LAMPING) TESTS SHALL BE PERFORMED ON ALL NEW SEWER LINES UP TO THE CONNECTION POINT WITH THE EXISTING SEWER SYSTEM. THESE TESTS SHALL BE REQUESTED AND PAID FOR BY THE CONTRACTOR.
4. LAMPING TESTS SHALL BE PERFORMED ON GRAVITY SEWERS FROM MANHOLE TO MANHOLE UP TO AND INCLUDING THE POINT OF CONNECTION TO THE EXISTING SEWER SYSTEM.
5. LEAKAGE TESTS SHALL BE PERFORMED ON ALL SEGMENTS OF A GRAVITY SEWER SYSTEM, INCLUDING SERVICE LATERALS AND MANHOLES, FOR A CONTINUOUS PERIOD OF NO LESS THAN 2 HOURS. AT THE END OF THE TEST, THE TOTAL MEASURED LEAKAGE SHALL NOT EXCEED 100 GALLONS PER INCH OF PIPE DIAMETER PER MILE PER DAY FOR ANY SECTION OF THE SYSTEM, WITH ZERO ALLOWABLE LEAKAGE FOR LATERALS AND MANHOLES. AN EXFILTRATION OR INFILTRATION TEST SHALL BE PERFORMED WITH A MINIMUM POSITIVE HEAD OF 2 FEET ON THE SECTION BEING TESTED.
6. FORCE MAINS SHALL BE PRESSURE-TESTED IN ACCORDANCE WITH RULE 62-555.330 (FAC). THE PRESSURE TEST SHALL CONSIST OF HOLDING A TEST PRESSURE OF 150 PSI ON THE PIPELINE FOR A CONTINUOUS PERIOD OF 2 HOURS THE MAXIMUM ALLOWABLE LEAKAGE SHALL BE DETERMINED BY THE FOLLOWING FORMULA:

$$\frac{L = S \times D \times \sqrt{P}}{148{,}000}$$

WHERE:
L = ALLOWABLE LEAKAGE FOR SYSTEM IN GALLONS PER HOUR
D = PIPE DIAMETER IN INCHES
S = LENGTH OF LINES IN LINEAL FEET
P = AVERAGE TEST PRESSURE IN PSI

7. CONTRACTOR SHALL BE RESPONSIBLE FOR IDENTYFYING CONFLICTS WITH FORCE MAINS PLACED AT MINIMUM COVER. IN CASE OF CONFLICT, FORCE MAIN SHALL BE LOWERED TO PASS UNDER CONFLICTS WITH 12" MINIMUM SEPARATION FROM WATER MAINS AND 6" MINIMUM SEPARATION FROM OTHER UTILITIES. NO ADDITIONAL PAYMENT SHALL BE DUE TO CONTRACTOR FOR LOWERING THE MAIN OR THE ADDITIONAL FITTINGS USED THEREON.
8. WHENEVER IT IS NECESSARY, IN THE INTEREST OF SAFETY, TO BRACE THE SIDES OF A TRENCH, THE CONTRACTOR SHALL FURNISH, PUT IN PLACE AND MAINTAIN SUCH SHEETING OR BRACING AS MAY BE NECESSARY TO SUPPORT THE SIDES OF THE EXCAVATION TO ENSURE PERSONNEL SAFETY, AND TO PREVENT MOVEMENT WHICH CAN IN ANY WAY DAMAGE THE WORK OR ENDANGER ADJACENT STRUCTURES. THE CONTRACTOR SHALL BE SOLELY RESPONSIBLE FOR THE SEQUENCE, METHODS AND MEANS OF CONSTRUCTION, AND FOR THE IMPLEMENTATION OF ALL OSHA AND OTHER SAFETY REQUIREMENTS.

ISSUED: 03/01/1994	DEPARTMENT OF PUBLIC UTILITIES STANDARD DETAIL	REVISED: 06/08/2014
DRAWN: EAM	SANITARY SEWER MAIN CONSTRUCTION NOTES	DRAWING NO. S-01
APPROVED: XXX		

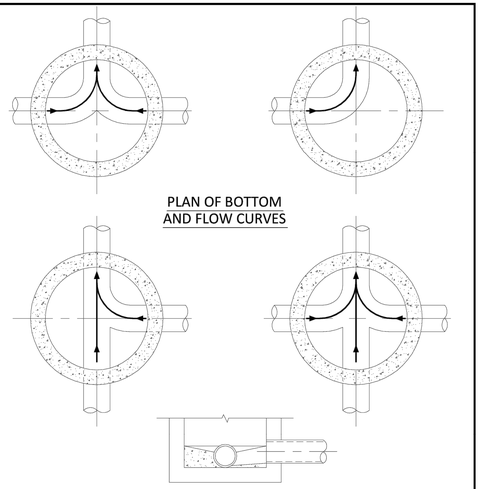

NOTES:

1. INVERT CHANNELS TO BE CONSTRUCTED FOR SMOOTH FLOW WITH NO OBSTRUCTIONS.
2. SPILLWAYS SHALL BE CONSTRUCTED BETWEEN PIPES WITH DIFFERENT INVERT ELEVATIONS PROVIDING SMOOTH FLOWS.
3. CHANNELS FOR FUTURE CONNECTIONS (STUBS) SHALL BE CONSTRUCTED FILLED WITH SAND & COVERED WITH 1" OF MORTAR.
4. WHEN FLOW LINE DEFLECTS MORE THAN 45°, A DROP OF 0.10' IS REQUIRED.

ISSUED: 03/01/1994	DEPARTMENT OF PUBLIC UTILITIES STANDARD DETAIL	REVISED: 06/08/2014
DRAWN: EAM	MANHOLE FLOW PATTERNS	DRAWING NO. S-02
APPROVED: XXX		

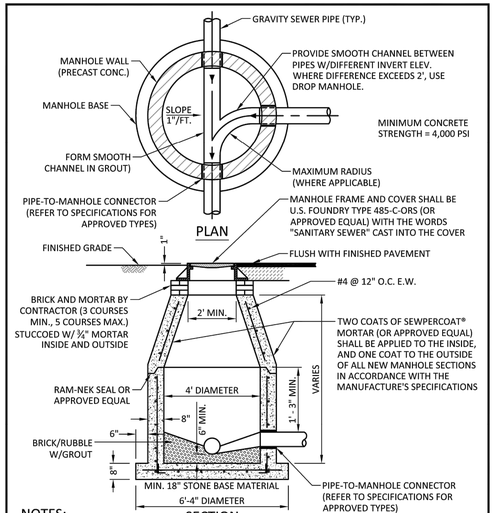

NOTES:

1. SHOP DRAWINGS SHOWING ALL DIMENSIONS, INCLUDING CONCRETE REINFORCEMENT AND BUOYANCY, SHALL BE SUBMITTED TO THE CITY PRIOR TO INSTALLATION.
2. THE BOTTOM SLAB SHALL BE CAST MONOLITHICALLY WITH THE LOWER WALL SECTION TO A MINIMUM OF 3' ABOVE SLAB BASE.
3. NO CONSTRUCTION JOINTS ARE ALLOWED BELOW ELEVATION +2.00 NAVD. ABOVE ELEVATION +2.00 NAVD CONSTRUCTION JOINTS ARE ALLOWED, IF ADEQUATE JOINTS WITH KEY-WAYS AND WATER STOPS ARE PROVIDED. SUBMIT SHOP DRAWINGS OF JOINT DETAILS TO THE ENGINEER FOR APPROVAL.

ISSUED: 03/01/1994	DEPARTMENT OF PUBLIC UTILITIES STANDARD DETAIL	REVISED: 07/18/2018
DRAWN: EAM	STANDARD PRECAST MANHOLE	DRAWING NO. S-03
APPROVED: XXX		

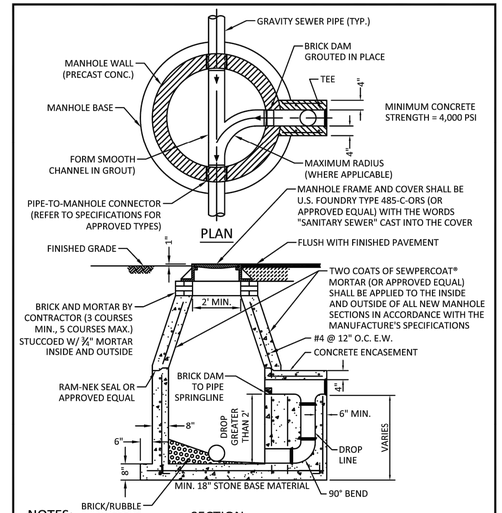

NOTES:

1. SHOP DRAWINGS SHOWING ALL DIMENSIONS, INCLUDING CONCRETE REINFORCEMENT AND BUOYANCY, SHALL BE SUBMITTED TO THE CITY PRIOR TO INSTALLATION.
2. THE BOTTOM SLAB SHALL BE CAST MONOLITHICALLY WITH THE LOWER WALL SECTION TO A MINIMUM OF 3' ABOVE SLAB BASE.
3. NO CONSTRUCTION JOINTS ARE ALLOWED BELOW ELEVATION +2.00 NAVD. ABOVE ELEVATION +2.00 NAVD CONSTRUCTION JOINTS ARE ALLOWED, IF ADEQUATE JOINTS WITH KEY-WAYS AND WATER STOPS ARE PROVIDED. SUBMIT SHOP DRAWINGS OF JOINT DETAILS TO THE ENGINEER FOR APPROVAL.

ISSUED: 03/01/1994	DEPARTMENT OF PUBLIC UTILITIES STANDARD DETAIL	REVISED: 07/18/2018
DRAWN: EAM	DROP MANHOLE	DRAWING NO. S-04
APPROVED: XXX		

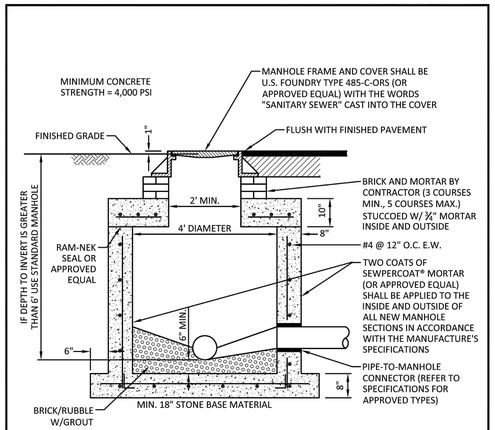

NOTES:

1. SHOP DRAWINGS SHOWING ALL DIMENSIONS, INCLUDING CONCRETE REINFORCEMENT AND BUOYANCY, SHALL BE SUBMITTED TO THE CITY PRIOR TO INSTALLATION.
2. THE BOTTOM SLAB SHALL BE CAST MONOLITHICALLY WITH THE LOWER WALL SECTION TO A MINIMUM OF 3' ABOVE SLAB BASE.
3. NO CONSTRUCTION JOINTS ARE ALLOWED BELOW ELEVATION +2.00 NAVD. ABOVE ELEVATION +2.00 NAVD CONSTRUCTION JOINTS ARE ALLOWED, IF ADEQUATE JOINTS WITH KEY-WAYS AND WATER STOPS ARE PROVIDED. SUBMIT SHOP DRAWINGS OF JOINT DETAILS TO THE ENGINEER FOR APPROVAL.

ISSUED: 03/01/1994	DEPARTMENT OF PUBLIC UTILITIES STANDARD DETAIL	REVISED: 07/18/2018
DRAWN: EAM	SHALLOW MANHOLE	DRAWING NO. S-05
APPROVED: XXX		

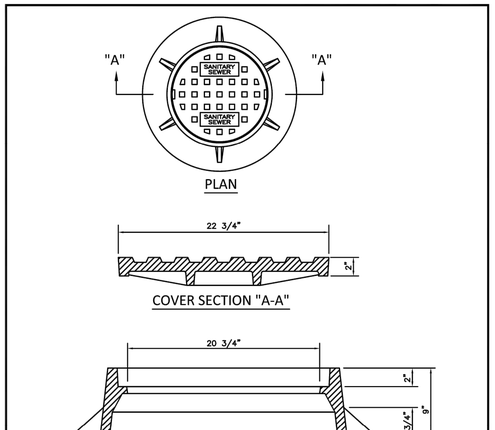

NOTES:

1. LETTERS ON COVER TO BE 3/8" HIGH, 1/4" TO 5/16" THICK AND FLUSH WITH TOP OF COVER.
2. ALL BEARING SURFACES TO BE MACHINED.
3. MINIMUM WEIGHTS: COVER - 160 LBS., TOTAL - 400 LBS.
4. MANHOLE FRAME AND COVER SHALL BE U.S. FOUNDRY 485-C-ORS WITH THE WORDS "SANITARY SEWER" CAST INTO THE COVER.

ISSUED: 03/01/1994	DEPARTMENT OF PUBLIC UTILITIES STANDARD DETAIL	REVISED: 06/08/2014
DRAWN: EAM	MANHOLE FRAME AND COVER	DRAWING NO. S-06
APPROVED: XXX		

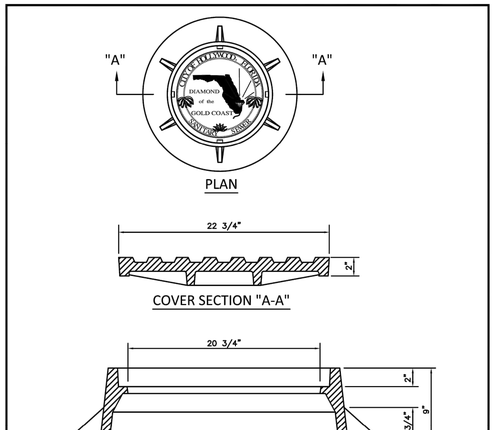

NOTES:

1. LETTERS ON COVER TO BE 3/8" HIGH, 1/4" TO 5/16" THICK AND FLUSH WITH TOP OF COVER.
2. ALL BEARING SURFACES TO BE MACHINED.
3. MINIMUM WEIGHTS: COVER - 160 LBS., TOTAL - 400 LBS.
4. MANHOLE FRAME AND COVER SHALL BE U.S. FOUNDRY 485-C-ORS TYPE EL, WITH THE WORDS "SANITARY SEWER" CAST INTO THE COVER.

ISSUED: 03/01/1994	DEPARTMENT OF PUBLIC UTILITIES STANDARD DETAIL	REVISED: 06/08/2014
DRAWN: EAM	MANHOLE FRAME AND COVER CITY OF HOLLYWOOD	DRAWING NO. S-06.1
APPROVED: XXX		

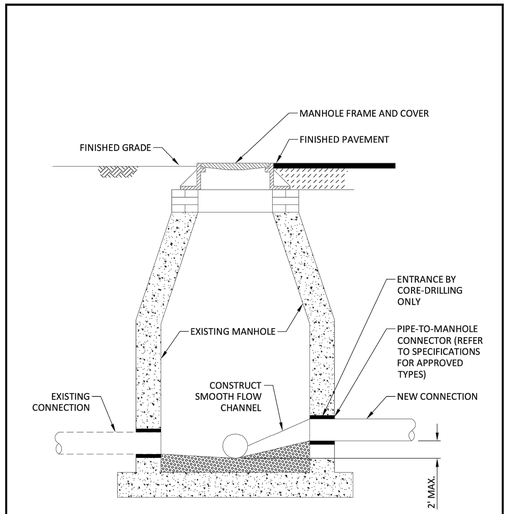

ISSUED: 03/01/1994	DEPARTMENT OF PUBLIC UTILITIES STANDARD DETAIL	REVISED: 06/08/2014
DRAWN: EAM	NEW CONNECTION TO EXISTING MANHOLE	DRAWING NO. S-07
APPROVED: XXX		

CHAD E. EDWARDS, STATE OF FLORIDA
PROFESSIONAL ENGINEER LICENSE NO. 59306
THIS ITEM HAS BEEN DIGITALLY SIGNED AND SEALED BY CHAD E. EDWARDS ON THE DATE INDICATED HERE. PRINTED COPIES OF THIS DOCUMENT ARE NOT CONSIDERED SIGNED AND SEALED AND THE SIGNATURE MUST BE VERIFIED ON ANY ELECTRONIC COPIES

DATE: 03/17/23
SCALE: 1"=20'
DESIGN BY: LZG
DRAWN BY: LZG
CHECKED BY: CEE
APPROVED BY: CEE

BY:	DESCRIPTION:	DATE:

CRAVEN • THOMPSON AND ASSOCIATES, INC.
ENGINEERS • PLANNERS • SURVEYORS
3563 N.W. 53RD STREET, FORT LAUDERDALE, FLORIDA 33309
FAX: (954) 739-6409 TEL: (954) 739-6400
FLORIDA LICENSED ENGINEERING, SURVEYING & MAPPING BUSINESS No. 271
FLORIDA LICENSED LANDSCAPE ARCHITECTURE BUSINESS No. 0000314

MATERIAL SHOWN HEREON IS THE PROPERTY OF CRAVEN, THOMPSON & ASSOCIATES, INC. AND SHALL NOT BE REPRODUCED OR USED IN WHOLE OR IN PART WITHOUT WRITTEN PERMISSION OF CRAVEN•THOMPSON & ASSOCIATES, INC.

SOLESTE LA PIAZZA
HOLLYWOOD, FLORIDA
PREPARED FOR:
THE ESTATES COMPANIES
WATER AND SEWER DETAILS

Chad E. Edwards
Florida P.E. No. 59306

22-0064-001-01

C-14
SHEET 14 OF 17

R: \Engineering\2022\22-0064-001-01 La Piazza\Drawings\22-0064 WSD1.dwg [C-14] Mar 17, 2023 4:03pm RBURKERT

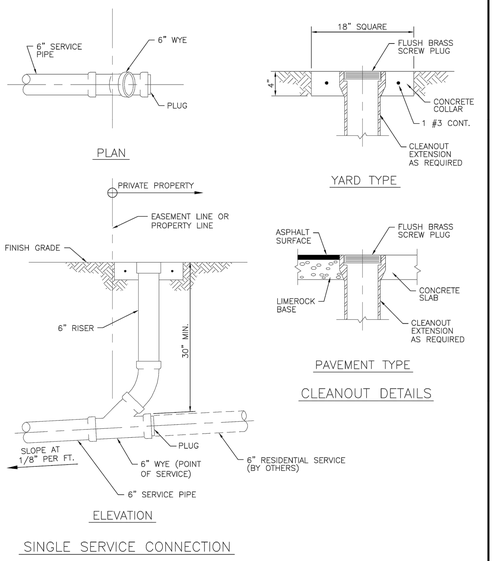

SINGLE SERVICE CONNECTION

CLEANOUT DETAILS

ISSUED: 03/01/1994	DEPARTMENT OF PUBLIC UTILITIES STANDARD DETAIL	REVISED: 06/08/2014
DRAWN: EAM	SEWER SERVICE CONNECTION AND CLEANOUT AT PROPERTY LINE	DRAWING NO. S-12
APPROVED: XXX		

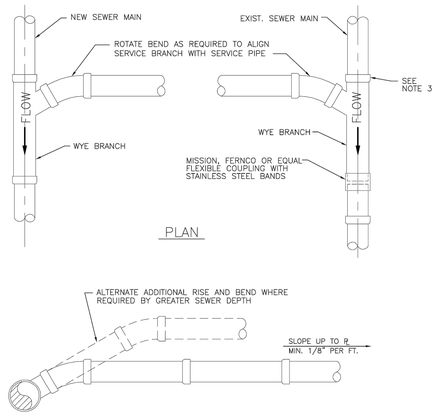

NOTES:

1. SINGLE SERVICE CONNECTIONS SHALL USE 6" PIPE AND FITTINGS.
2. USE RISER CONNECTIONS WHERE INVERT OF SEWER IS GREATER THAN 7'-0" DEEP.
3. WHERE BELL OF WYE AND SPIGOT OF EXISTING MAIN ARE NOT COMPATIBLE, USE A SECOND FLEXIBLE COUPLING.

ISSUED: 03/01/1994	DEPARTMENT OF PUBLIC UTILITIES STANDARD DETAIL	REVISED: 06/08/2014
DRAWN: EAM	WYE BRANCH CONNECTION	DRAWING NO. S-09
APPROVED: XXX		

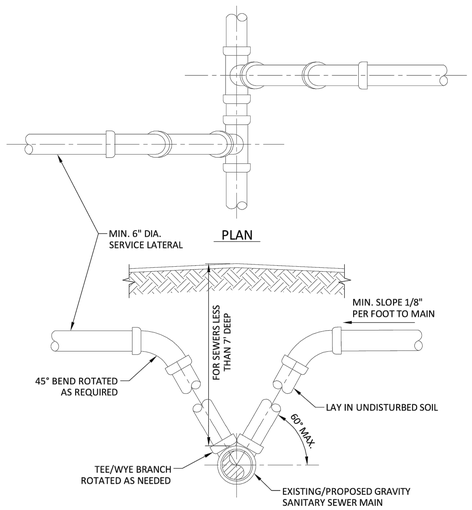

NOTES:

1. MODIFIED RISER CONNECTION TO BE USED ONLY WHEN DIRECTED BY THE CITY.
2. NO. 57 ROCK OR ¾" DRAINFIELD LIMEROCK MAY BE USED AS BEDDING OVER UNDISTURBED SOIL WITH PVC PIPE.
3. SINGLE SERVICE CONNECTIONS SHALL USE 6" (MIN.) DIAMETER PIPE AND FITTINGS.

ISSUED: 03/01/1994	DEPARTMENT OF PUBLIC UTILITIES STANDARD DETAIL	REVISED: 06/08/2014
DRAWN: EAM	SANITARY SEWER LATERAL MODIFIED RISER	DRAWING NO. S-10
APPROVED: XXX		

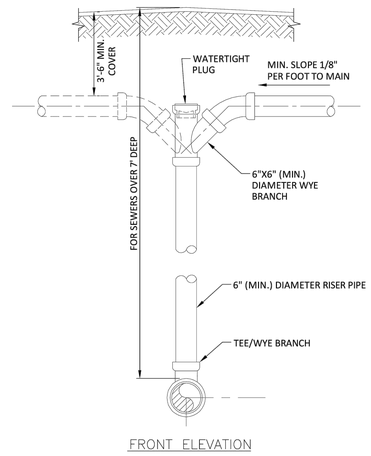

NOTES:

1. RISER CONNECTION TO BE USED ONLY WHEN SANITARY SEWER IS MORE THAN 7'-0" DEEP OR WHEN DIRECTED BY THE CITY.
2. NO. 57 ROCK OR ¾" DRAINFIELD LIMEROCK MAY BE USED AS BEDDING OVER UNDISTURBED SOIL WITH PVC PIPE.
3. SINGLE SERVICE CONNECTIONS SHALL USE 6" (MIN.) DIAMETER PIPE AND FITTINGS.

ISSUED: 03/01/1994	DEPARTMENT OF PUBLIC UTILITIES STANDARD DETAIL	REVISED: 06/08/2014
DRAWN: EAM	SANITARY SEWER LATERAL VERTICAL RISER	DRAWING NO. S-11
APPROVED: XXX		

DATE:	03/17/23
SCALE:	1"=20'
DESIGN BY:	LZG
DRAWN BY:	LZG
CHECKED BY:	CEE
APPROVED BY:	CEE

BY:	DATE:	DESCRIPTION:

CRAVEN • THOMPSON AND ASSOCIATES, INC.
ENGINEERS • PLANNERS • SURVEYORS
3563 N.W. 53RD STREET, FORT LAUDERDALE, FLORIDA 33309
FAX: (954) 739-6409 TEL: (954) 739-6400
FLORIDA LICENSED ENGINEERING, SURVEYING & MAPPING BUSINESS No. 271
FLORIDA LICENSED LANDSCAPE ARCHITECTURE BUSINESS No. C000114

MATERIAL SHOWN HEREON IS THE PROPERTY OF CRAVEN, THOMPSON & ASSOCIATES, INC. AND SHALL NOT BE REPRODUCED IN WHOLE OR IN PART WITHOUT WRITTEN PERMISSION OF CRAVEN•THOMPSON & ASSOCIATES, INC. ©COPYRIGHT

SOLESTE LA PIAZZA
HOLLYWOOD, FLORIDA

PREPARED FOR:
THE ESTATES COMPANIES

WATER AND SEWER DETAILS

Chad E. Edwards
Florida P.E. No. 59306

22-0064-001-01

C-15
SHEET 15 OF 17

CHAD E. EDWARDS, STATE OF FLORIDA
PROFESSIONAL ENGINEER, LICENSE NO. 59306
THIS ITEM HAS BEEN DIGITALLY SIGNED AND SEALED BY CHAD E. EDWARDS ON THE DATE INDICATED HERE.
PRINTED COPIES OF THIS DOCUMENT ARE NOT CONSIDERED SIGNED AND SEALED AND THE SIGNATURE MUST BE VERIFIED ON ANY ELECTRONIC COPIES

R:\Engineering\2022\22-0064-001-01 La Piazza\Drawings\22-0064 WSDT.dwg [C-15] Mar 17, 2023 4:03pm RBURKERT

WATER SYSTEM NOTES:

1. NEW OR RELOCATED UNDERGROUND WATER MAINS INCLUDED IN THIS PROJECT THAT WILL CROSS ANY EXISTING OR PROPOSED GRAVITY OR VACUUM-TYPE SANITARY SEWER OR STORM SEWER WILL BE LAID SO THE OUTSIDE OF THE WATER MAIN IS AT LEAST SIX INCHES ABOVE THE OTHER PIPELINE OR AT LEAST 12 INCHES BELOW THE OTHER PIPELINE.
2. NEW OR RELOCATED UNDERGROUND WATER MAINS INCLUDED IN THIS PROJECT THAT WILL CROSS ANY EXISTING OR PROPOSED PRESSURE-TYPE SANITARY SEWER, WASTEWATER OR STORM WATER FORCE MAIN, OR PIPELINE CONVEYING RECLAIMED WATER WILL BE LAID SO THE OUTSIDE OF THE WATER MAIN IS AT LEAST 12 INCHES ABOVE OR BELOW THE OTHER PIPELINE. [FAC 62-555.314(2); EXCEPTIONS ALLOWED UNDER FAC 62-555.314(5)].
3. AT ALL UTILITY CROSSINGS DESCRIBED ABOVE, ONE FULL LENGTH OF WATER MAIN PIPE WILL BE CENTERED ABOVE OR BELOW THE OTHER PIPELINE SO THE WATER MAIN JOINTS WILL BE AS FAR AS POSSIBLE FROM THE OTHER PIPELINE, OR THE PIPES WILL BE ARRANGED SO THAT ALL WATER MAIN JOINTS ARE AT LEAST THREE FEET FROM ALL JOINTS IN VACUUM-TYPE SANITARY SEWERS, STORM SEWERS, STORM WATER FORCE MAINS, OR PIPELINES CONVEYING RECLAIMED WATER REGULATED UNDER PART III OF CHAPTER 62-610, F.A.C., AND AT LEAST SIX FEET FROM ALL JOINTS IN GRAVITY OR PRESSURE-TYPE SANITARY SEWERS, WASTEWATER FORCE MAINS, OR PIPELINES CONVEYING RECLAIMED WATER NOT REGULATED UNDER PART III OF CHAPTER 62-610, F.A.C. [FAC 62-555.314(2); EXCEPTIONS ALLOWED UNDER FAC 62-555.314(5)].
4. NEW UNDERGROUND WATER MAINS INCLUDED IN THIS PROJECT TO BE DUCTILE IRON PIPE (D.I.P.) WHEN CROSSING BELOW SANITARY SEWER MAINS.
5. POLYETHYLENE ENCASEMENT MATERIAL SHALL BE USED TO ENCASE ALL BURIED DUCTILE IRON PIPE, FITTINGS, VALVES, RODS, AND APPURTENANCES IN ACCORDANCE WITH AWWA C105, METHOD A. THE POLYETHYLENE TUBING SHALL BE CUT TWO FEET LONGER THAN THE PIPE SECTION AND SHALL OVERLAP THE ENDS OF THE PIPE BY ONE FOOT. THE POLYETHYLENE TUBING SHALL BE GATHERED AND LAPPED TO PROVIDE A SNUG FIT AND SHALL BE SECURED AT QUARTER POINTS WITH POLYETHYLENE TAPE. EACH END OF THE POLYETHYLENE TUBING SHALL BE SECURED WITH A WRAP OF POLYETHYLENE TAPE.
6. THE POLYETHYLENE TUBING SHALL PREVENT CONTACT BETWEEN THE PIPE AND BEDDING MATERIAL, BUT IS NOT INTENDED TO BE A COMPLETELY AIRTIGHT AND WATERTIGHT ENCLOSURE. DAMAGED POLYETHYLENE TUBING SHALL BE REPAIRED IN A WORKMANLIKE MANNER USING POLYETHYLENE TAPE, OR THE DAMAGED SECTION SHALL BE REPLACED. POLY WRAP WILL NOT BE PAID FOR AS A SEPARATE BID ITEM. IT SHALL BE CONSIDERED TO BE A PART OF THE PRICE BID FOR WATER MAINS.
7. FIRE HYDRANT BARRELS SHALL BE ENCASED IN POLY WRAP UP TO THE GROUND SURFACE AND THE WEEP HOLES SHALL NOT BE COVERED BY THE POLY WRAP.
8. GATE VALVES FOR USE WITH PIPE LESS THAN THREE INCHES (3") IN DIAMETER SHALL BE RATED FOR TWO HUNDRED (200) PSI WORKING PRESSURE, NON-SHOCK, BLOCK PATTERN, SCREWED BONNET, NON-RISING STEM, BRASS BODY, AND SOLID WEDGE. THEY SHALL BE STANDARD THREADED FOR PVC PIPE AND HAVE A MALLEABLE IRON HANDWHEEL. GATE VALVES 3" THROUGH 16" IN DIAMETER SHALL BE RESILIENT SEAT AND BIDIRECTIONAL FLOW ONLY. VALVES FOR SPECIAL APPLICATIONS WILL REQUIRE CITY UTILITY APPROVAL.
9. VALVE BOXES AND COVERS FOR ALL SIZE VALVES SHALL BE OF CAST IRON CONSTRUCTION AND ADJUSTABLE SCREW-ON TYPE. THE LID SHALL HAVE CAST IN THE METAL THE WORD "WATER" FOR THE WATER LINES. ALL VALVE BOXES SHALL BE SIX INCH (6") NOMINAL DIAMETER AND SHALL BE SUITABLE FOR DEPTHS OF THE PARTICULAR VALVE. THE STEM OF THE BURIED VALVE SHALL BE WITHIN TWENTY-FOUR INCHES (24") OF THE FINISHED GRADE UNLESS OTHERWISE APPROVED BY THE CITY.
10. ALL WATER MAIN INSTALLATIONS SHALL COMPLY WITH THE COLOR CODING REQUIREMENTS OF CHAPTER 62-555.320 F.A.C.

ISSUED: 03/01/1994	DEPARTMENT OF PUBLIC UTILITIES STANDARD DETAIL	REVISED: 06/08/2014
DRAWN: EAM	WATER SYSTEM NOTES	DRAWING NO. W-01
APPROVED: XXX		

WATER SYSTEM NOTES (CONTINUED):

11. ALL WATER MAIN INSTALLATIONS SHALL COMPLY WITH THE COLOR CODING REQUIREMENTS OF CHAPTER 62-555.320 F.A.C.
12. ALL PVC PIPE SHALL CONFORM TO THE REQUIREMENTS OF ANSI/AWWA C900 LATEST REVISION AND CLASS DR 18. ALL DIP WATER MAINS SHALL BE DUCTILE IRON PRESSURE CLASS 350, WITH WALL THICKNESS COMPLYING WITH CLASS 52. ALL DUCTILE IRON PIPE SHALL CONFORM TO THE REQUIREMENTS OF ANSI/AWWA C151/A21.51-02 AND BE CEMENT LINED AND SEAL COATED PER ANSI/AWWA C104/A21.4-03.
13. FITTINGS SHALL BE DUCTILE IRON, MEETING ANSI/AWWA C153/A21.53-00 SPECIFICATIONS, WITH 350 PSI MINIMUM WORKING PRESSURE. FITTINGS MUST BE CEMENT LINED AND SEAL COATED PER ANSI/AWWA C104/A21.4-03. ALL DUCTILE IRON PIPE AND FITTINGS MUST BE MANUFACTURED IN THE UNITED STATES OF AMERICA.
14. ALL DUCTILE IRON PIPE TO BE MECHANICAL JOINTS, WRAPPED IN POLY. ADEQUATE PROTECTIVE MEASURES AGAINST CORROSION SHALL BE USED AS DETERMINED BY DESIGN.
15. PAVEMENT RESTORATION SHALL BE CARRIED OUT IN ACCORDANCE WITH THE REQUIREMENTS OF THE CITY.
16. ALL TRENCHING, PIPE LAYING, BACKFILL, PRESSURE TESTING, AND DISINFECTING MUST COMPLY WITH THE CITY OF HOLLYWOOD SPECIFICATIONS.
17. THE MINIMUM DEPTH OF COVER OVER WATER MAINS IS 30" (DIP) OR 36" (PVC).
18. MINIMUM HORIZONTAL SEPARATION BETWEEN STORM STRUCTURES AND WATER MAINS SHALL BE 3'.
19. MAXIMUM DEFLECTION PER EACH JOINT SHALL BE 50% OF MANUFACTURES RECOMMENDATION (MAXIMUM) WHERE DEFLECTION IS REQUIRED.
20. CONTRACTOR SHALL BE RESPONSIBLE FOR IDENTIFYING CONFLICTS WITH WATER MAINS PLACED AT MINIMUM COVER. IN CASE OF CONFLICT, WATER MAIN SHALL BE LOWERED TO PASS UNDER CONFLICTS WITH 18" MINIMUM VERTICAL SEPARATION. NO ADDITIONAL PAYMENT SHALL BE DUE TO CONTRACTOR FOR LOWERING THE MAIN OR THE ADDITIONAL FITTINGS USED THEREON.
21. PIPE JOINT RESTRAINT SHALL BE PROVIDED BY THE USE OF DUCTILE IRON FOLLOWER GLANDS MANUFACTURED TO ASTM A 536-80. TWIST-OFF NUTS SHALL BE USED TO ENSURE PROPER ACTUATING OF THE RESTRAINING DEVICES. THE MECHANICAL JOINT RESTRAINING DEVICES SHALL HAVE A WORKING PRESSURE OF 250 PSI MINIMUM, WITH A MINIMUM SAFETY FACTOR OF 2:1, AND SHALL BE EBAA IRON INC., MEGALUG OR APPROVED EQUAL. JOINT RESTRAINTS SHALL BE PROVIDED AT A MINIMUM OF THREE JOINTS (60 FEET) FROM ANY FITTING.
22. WHENEVER IT IS NECESSARY, IN THE INTEREST OF SAFETY, TO BRACE THE SIDES OF A TRENCH, THE CONTRACTOR SHALL FURNISH, PUT IN PLACE AND MAINTAIN SUCH SHEETING OR BRACING AS MAY BE NECESSARY TO SUPPORT THE SIDES OF THE EXCAVATION TO ENSURE PERSONNEL SAFETY, AND TO PREVENT MOVEMENT WHICH CAN IN ANY WAY DAMAGE THE WORK OR ENDANGER ADJACENT STRUCTURES. THE CONTRACTOR SHALL BE SOLELY RESPONSIBLE FOR THE SEQUENCE, METHODS AND MEANS OF CONSTRUCTION, AND FOR THE IMPLEMENTATION OF ALL OSHA AND OTHER SAFETY REQUIREMENTS.

ISSUED: 03/01/1994	DEPARTMENT OF PUBLIC UTILITIES STANDARD DETAIL	REVISED: 06/08/2014
DRAWN: EAM	WATER SYSTEM NOTES	DRAWING NO. W-02
APPROVED: XXX		

WATER METER SERVICE NOTES:

1. SUCCESSIVE TAPS INTO THE WATER MAIN SHALL BE SPACED NOT LESS THAN 18" ON CENTER.
2. P.E. TUBING SHALL BE IN ACCORDANCE WITH THE LATEST EDITION OF AWWA STANDARD C901, "POLYETHYLENE (PE) PRESSURE PIPE AND TUBING, 1/2 IN. (13mm) THROUGH 3 IN. (76 mm), FOR WATER SERVICE".
3. MINIMUM SERVICE PIPE DIAMETER SHALL BE 1" FOR SINGLE OR DUAL ¾" OR SINGLE 1" DIAMETER METERS.
4. MINIMUM SERVICE PIPE DIAMETER SHALL BE 2" FOR SINGLE OR DUAL 1-½" OR SINGLE 2" DIAMETER METERS.
5. FOR METER DIAMETERS LARGER THAN 2", THE MINIMUM SERVICE PIPE DIAMETER SHALL BE THE SAME AS THE METER DIAMETER.
6. APPROVED COPPER TUBING MAY BE USED AT THE CITY'S DISCRETION.
7. FOR NEW METER INSTALLATIONS, ALL SADDLES, VALVES, PIPING, FITTINGS,CURB STOPS, METER VALVES, METER COUPLINGS, METER VAULTS AND COVERS SHALL BE FURNISHED AND INSTALLED BY THE CONTRACTOR. THE WATER METERS WILL BE PROVIDED AND INSTALLED BY THE CITY OF HOLLYWOOD (NEW ACCOUNTS).
8. FOR METER RELOCATIONS, ALL SADDLES, VALVES, PIPING, FITTINGS, CURB STOPS, METER VALVES, METER COUPLINGS, METER VAULTS AND COVERS SHALL BE FURNISHED AND INSTALLED BY THE CONTRACTOR. THE EXISTING WATER METER TO BE RELOCATED AND INSTALLED BY CONTRACTOR.
9. FOR EXISTING METERS ABUTTING THE RIGHT-OF-WAY THAT ARE BEING DISCONNECTED FROM EXISTING MAINS AND RECONNECTED TO NEW MAINS, THE CONTRACTOR SHALL:
   a. CUT AND PLUG THE EXISTING SERVICE LINE AT THE MAIN AND AT THE METER, AND REMOVE THE EXISTING BALL VALVE CURB STOP.
   b. FURNISH AND INSTALL SERVICE SADDLE, CORPORATION STOP OR SERVICE VALVE AND VALVE BOX, PIPING AND FITTINGS UP TO AND INCLUDING THE BALL VALVE CURB STOP.
12. THE ELEVATION AT THE TOP OF THE METER BOX SHALL MATCH THE ELEVATION OF THE BACK OF SIDEWALK, WHENEVER PRACTICAL.
13. AS PART OF THE SERVICE INSTALLATION, THE CONTRACTOR SHALL RESTORE THE RIGHT-OF-WAY TO MATCH EXISTING CONDITIONS, INCLUDING ROADWAY PAVEMENT, PAVEMENT MARKINGS AND RPMs, CONCRETE CURBS, SIDEWALKS, RAMPS (INCLUDING DETECTABLE WARNING SURFACE), SODDING, AND ALL OTHER IMPROVEMENTS REMOVED OR DAMAGED DURING THE SERVICE INSTALLATION.
14. FOR UNPAVED AREAS, THE MINIMUM GROUND COVER ACCEPTED BY THE CITY IS SODDING.

ISSUED: 03/01/1994	DEPARTMENT OF PUBLIC UTILITIES STANDARD DETAIL	REVISED: 11/06/2017
DRAWN: EAM	WATER METER SERVICE NOTES FOR 5/8" THROUGH 2" METERS	DRAWING NO. W-07
APPROVED: XXX		

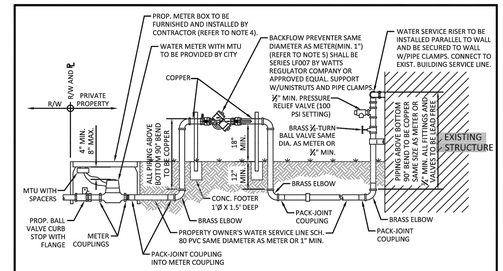

FOR 1", 1-1/2" & 2" RESIDENTIAL METERS, AND FOR ALL COMMERCIAL PROPERTIES REGARDLESS OF METER DIAMETER

SCALE: N.T.S.

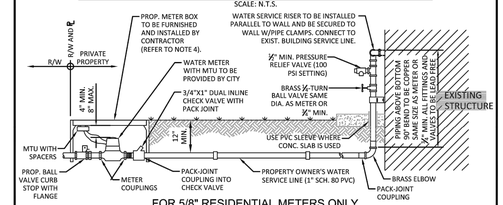

FOR 5/8" RESIDENTIAL METERS ONLY

SCALE: N.T.S.

NOTES FOR ALL SERVICES:

1. IF EXISTING HOSE BIB IS REMOVED, DAMAGED, OR NO HOSE BIB EXISTS, ONE MUST BE INSTALLED. A HOSE BIB VACUUM BREAKER MUST BE INSTALLED AS REQUIRED TO COMPLY WITH THE LATEST REVISION OF THE FLORIDA BUILDING CODE.
2. THREADED PVC FITTINGS (MALE OR FEMALE) NOT ALLOWED. ALL TRANSITIONS FROM PVC TO METAL PIPING/FITTINGS SHALL USE COMPRESSION PACK-JOINT COUPLINGS. THIS INCLUDES PVC CONNECTIONS TO INLINE CHECK VALVE AND BACKFLOW PREVENTER.
3. PIPE CLAMPS FOR ATTACHING WATER SERVICE RISER TO WALL SHALL BE HOT-DIPPED GALVANIZED, WITH ISOLATION MATERIAL BETWEEN THE PIPE AND GALVANIZED METAL.
4. IF EXISTING CONCRETE METER BOX IS IN ACCEPTABLE CONDITION (AS DETERMINED BY ECSO) IT MAY BE RE-USED.
5. IF EXISTING BACKFLOW PREVENTER IS DETERMINED TO BE IN ACCEPTABLE CONDITION IT MAY BE RE-USED PROVIDED IT IS RE-CERTIFIED.
6. ALL PRIVATE SERVICE LINE INSTALLATIONS SHALL COMPLY WITH THE LATEST REVISION OF THE FLORIDA BUILDING CODE.
7. ALL FITTINGS TO BE BRASS.

ISSUED: 03/01/1994	DEPARTMENT OF PUBLIC UTILITIES STANDARD DETAIL	REVISED: 02/14/2018
DRAWN: EAM	TYPICAL WATER SERVICE FROM METER TO STRUCTURE FOR 5/8" THROUGH 2" METERS	DRAWING NO. W-10
APPROVED: XXX		

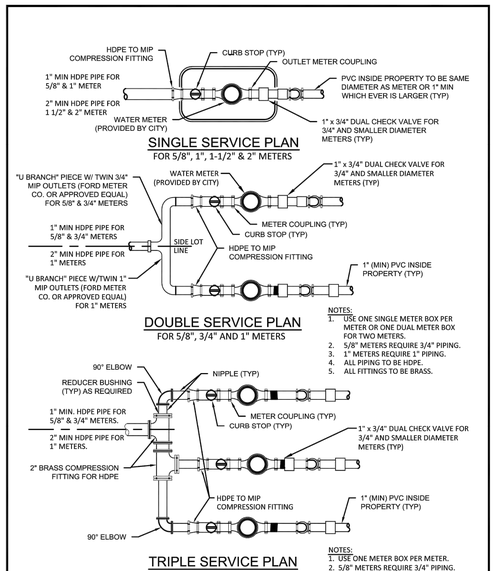

NO GALVANIZED PIPE OR FITTINGS ALLOWED

ISSUED: 03/01/1994	DEPARTMENT OF PUBLIC UTILITIES STANDARD DETAIL	REVISED: 11/06/2017
DRAWN: EAM	TYPICAL 5/8", 1", 1-1/2" AND 2" METER INSTALLATION	DRAWING NO. W-06
APPROVED: XXX		

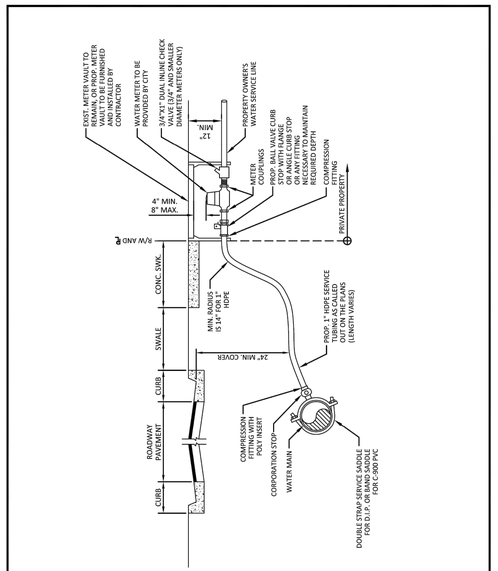

ISSUED: 03/01/1994	DEPARTMENT OF PUBLIC UTILITIES STANDARD DETAIL	REVISED: 11/06/2017
DRAWN: EAM	TYPICAL 1" HDPE WATER SERVICE FOR SINGLE/DUAL 5/8" TO 1" METERS	DRAWING NO. W-08
APPROVED: XXX		

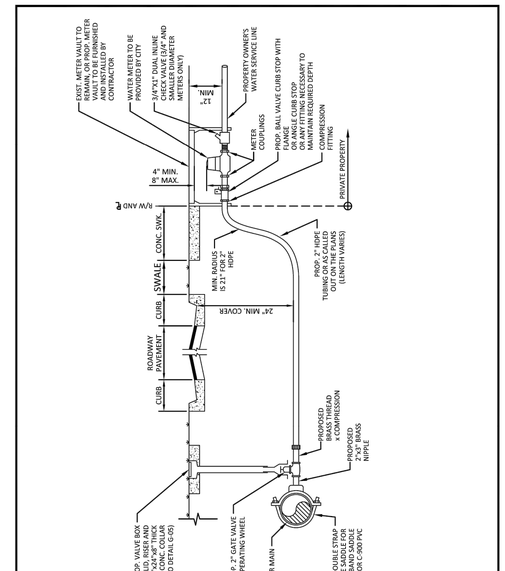

ISSUED: 03/01/1994	DEPARTMENT OF PUBLIC UTILITIES STANDARD DETAIL	REVISED: 11/06/2017
DRAWN: EAM	TYPICAL 2-INCH HDPE WATER SERVICE FOR SINGLE/DUAL 5/8" TO 1" METERS, AND ANY SINGLE 1-1/2" TO 2" METERS	DRAWING NO. W-09
APPROVED: XXX		

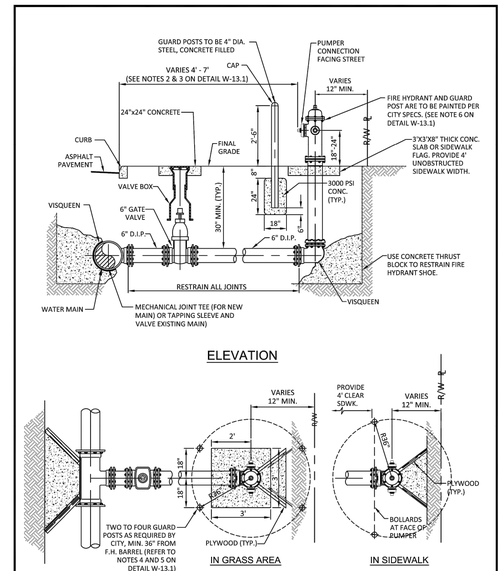

ISSUED: 03/01/1994	DEPARTMENT OF PUBLIC UTILITIES STANDARD DETAIL	REVISED: 03/05/2019
DRAWN: EAM	TYPICAL FIRE HYDRANT INSTALLATION	DRAWING NO. W-13
APPROVED: XXX		

CHAD E. EDWARDS, STATE OF FLORIDA, PROFESSIONAL ENGINEER, LICENSE NO. 59306
THIS ITEM HAS BEEN DIGITALLY SIGNED AND SEALED BY CHAD E. EDWARDS ON THE DATE INDICATED HERE.
PRINTED COPIES OF THIS DOCUMENT ARE NOT CONSIDERED SIGNED AND SEALED AND THE SIGNATURE MUST BE VERIFIED ON ANY ELECTRONIC COPIES

DATE: 03/17/23
SCALE: 1"=20'
DESIGN BY: LZG
DRAWN BY: LZG
CHECKED BY: CEE
APPROVED BY: CEE

BY:	DESCRIPTION:	DATE:

CRAVEN • THOMPSON AND ASSOCIATES, INC.
ENGINEERS • PLANNERS • SURVEYORS
3563 N.W. 53RD STREET, FORT LAUDERDALE, FLORIDA 33309
FAX: (954) 739-6409 TEL: (954) 739-6400
FLORIDA LICENSED ENGINEERING, SURVEYING & MAPPING BUSINESS No. 271
FLORIDA LICENSED LANDSCAPE ARCHITECTURE BUSINESS No. C000314

MATERIAL SHOWN HEREON IS THE PROPERTY OF CRAVEN, THOMPSON & ASSOCIATES, INC. AND SHALL NOT BE REPRODUCED IN WHOLE OR IN PART WITHOUT WRITTEN PERMISSION OF CRAVEN•THOMPSON & ASSOCIATES, INC. ©2023

SOLESTE LA PIAZZA
HOLLYWOOD, FLORIDA

PREPARED FOR:
THE ESTATES COMPANIES

WATER AND SEWER DETAILS

Chad E. Edwards
Florida P.E. No. 59306

22-0064-001-01

C-16

SHEET 16 OF 17

R:\Engineering\2022\22-0064-001-01 La Piazza\Drawings\22-0064 WSDT.dwg [C-16] Mar 17, 2023 4:03pm RBURKERT

NOTES:

1. IN ALL CASES, PROVIDE 4' UNOBSTRUCTED SIDEWALK CLEAR OF THE FIRE HYDRANT AND BOLLARDS.
2. FIRE HYDRANTS SHALL BE LOCATED BETWEEN 4' AND 7' FROM THE FACE OF CURB.
3. FIRE HYDRANTS SHALL NOT BE LOCATED WITHIN A RADIUS OR WITHIN FDOT CLEAR DRIVING ZONE.
4. GUARD POSTS SHALL BE INSTALLED AS REQUIRED FOR SAFETY OR AS APPROVED BY THE DEPT. OF PUBLIC UTILITIES. IN SIDEWALK, LOCATE GUARD POSTS AT THE FACE OF THE PUMPER AND 2'-6' LEFT/RIGHT OF ℄ OF THE FIRE HYDRANT.EXTRA POSTS MAY BE REQUIRED IN INDUSTRIAL AND CONGESTED TRAFFIC AREAS. (4 POSTS MAX.)
5. FIRE HYDRANT CONCRETE SLAB AND CONCRETE GUARD POST FOOTINGS SHALL BE DIFFERENT POURS.
6. THE FIRE HYDRANT BONNET, OPERATING NUT, HOLD-DOWN NUT, PUMPER CAP AND HOSE CAPS SHALL BE PAINTED GREEN, AND THE HYDRANT UPPER BARREL SHALL BE PAINTED SILVER IN ACCORDANCE WITH CITY SPECIFICATIONS.

ISSUED: 03/01/1994	DEPARTMENT OF PUBLIC UTILITIES STANDARD DETAIL	REVISED: 06/08/2014
DRAWN: EAM	TYPICAL FIRE HYDRANT NOTES	DRAWING NO. W-13.1
APPROVED: XXX		

WATER MAIN TESTING AND DISINFECTION NOTES:

1. NO CONNECTIONS TO THE EXISTING LINES SHALL BE MADE UNTIL THE PRESSURE AND BACTERIOLOGICAL TESTS HAVE BEEN PERFORMED ON THE PROPOSED WATER MAINS AND THE SYSTEM HAS BEEN APPROVED BY THE CITY OF HOLLYWOOD AND THE BROWARD COUNTY HEALTH DEPARTMENT.
2. THE PRESSURE TEST SHALL BE PERFORMED FOR 2 HOURS AT A CONSTANT PRESSURE OF 150 PSI AND IN ACCORDANCE WITH RULE 62-555.330 (FAC) C600 AWWA LATEST REVISION, EXCEPT AS OTHERWISE SPECIFIED HEREIN AND IN SPECIFICATION SECTION 15995, "PIPELINE TESTING AND DISINFECTION". PRESSURE TEST SHALL BE WITNESSED BY THE CITY OF HOLLYWOOD. THE ALLOWABLE LEAKAGE SHALL BE LESS THAN THE NUMBER OF GALLONS PER HOUR AS DETERMINED BY THE FORMULA:

$$L = \frac{S \times D \times \sqrt{P}}{148{,}000}$$

L = THE ALLOWABLE LEAKAGE IN GALLONS PER HOUR.
S = THE LENGTH OF PIPE BEING TESTED.
D = THE NOMINAL DIAMETER OF THE PIPE BEING TESTED.
P = THE AVERAGE TEST PRESSURE IN POUNDS PER SQUARE INCH.

3. THE COMPLETE LENGTH OF THE PROPOSED WATER MAIN SHALL BE TESTED, IN LENGTHS NOT TO EXCEED 2,000 FEET PER TEST.
4. PROPOSED WATER MAINS SHALL BE DISINFECTED IN ACCORDANCE WITH THE LATEST EDITION OF ANSI/AWWA STANDARD C651 AND BACTERIOLOGICAL TESTED FOR TWO CONSECUTIVE DAYS IN ACCORDANCE WITH SPECIFICATION SECTION 15995, "PIPELINE TESTING AND DISINFECTION".
5. BACTERIOLOGICAL TESTS SHALL BE REQUESTED AND PAID FOR BY THE CONTRACTOR.
6. THE CONTRACTOR SHALL DIRECTLY HIRE A TESTING LABORATORY CERTIFIED BY THE FLORIDA DEPARTMENT OF HEALTH IN ORDER TO COLLECT AND TEST WATER SAMPLES FROM THE WATER DISTRIBUTION SYSTEM TO BE PLACED INTO SERVICE. SAMPLE COLLECTION AND BACTERIOLOGICAL ANALYSES SHALL BE PERFORMED IN ACCORDANCE WITH RULES 62-555.315(6), 62-555.340 AND 62-555.330 (FAC), AS WELL AS ALL REQUIREMENTS OF THE BROWARD COUNTY HEALTH DEPARTMENT PERMIT.
7. THE WATER DISTRIBUTION SYSTEM SHALL NOT BE CONSIDERED COMPLETE AND READY FOR FINAL INSPECTION UNTIL SUCCESSFUL TEST RESULTS ARE OBTAINED FOR ALL TESTS DESCRIBED ABOVE.

ISSUED: 03/01/1994	DEPARTMENT OF PUBLIC UTILITIES STANDARD DETAIL	REVISED: 06/08/2014
DRAWN: EAM	WATER MAIN TESTING AND DISINFECTION NOTES	DRAWING NO. W-14
APPROVED: XXX		

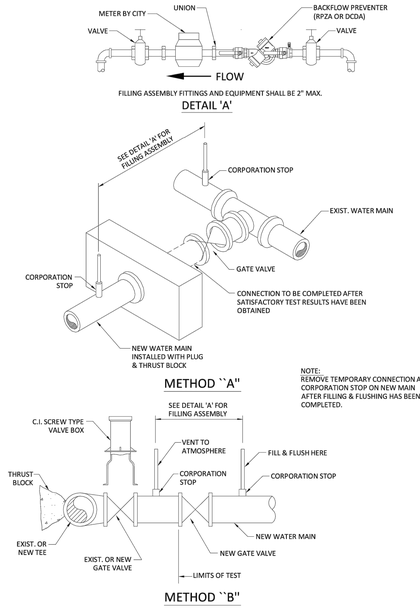

ISSUED: 03/01/1994	DEPARTMENT OF PUBLIC UTILITIES STANDARD DETAIL	REVISED: 06/08/2014
DRAWN: EAM	FILLING AND FLUSHING DETAILS	DRAWING NO. W-15
APPROVED: XXX		

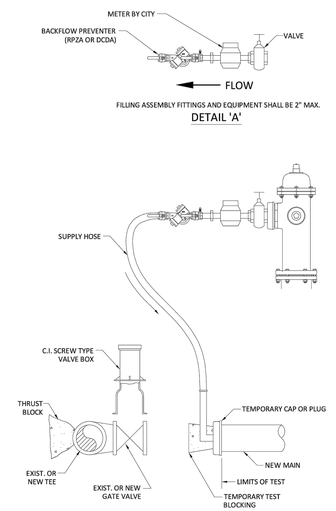

NOTES:
1. HOSE MUST BE REMOVED DURING THE HYDROSTATIC PRESSURE TEST.
2. REMOVE TEMPORARY CONNECTION ON NEW MAIN AFTER FILLING & FLUSHING HAS BEEN COMPLETED.

ISSUED: 03/01/1994	DEPARTMENT OF PUBLIC UTILITIES STANDARD DETAIL	REVISED: 06/08/2014
DRAWN: EAM	CROSS CONNECTION FILLING AND FLUSHING DETAILS	DRAWING NO. W-15.1
APPROVED: XXX		

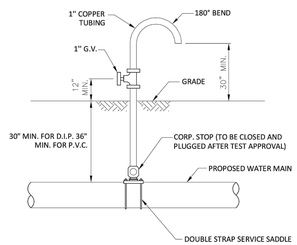

NOTES:
SAMPLING POINT SHALL NOT BE REMOVED UNTIL APPROVAL IS OBTAINED FROM BROWARD COUNTY HEALTH DEPARTMENT.

ISSUED: 03/01/1994	DEPARTMENT OF PUBLIC UTILITIES STANDARD DETAIL	REVISED: 06/08/2014
DRAWN: EAM	SAMPLING POINT DETAIL	DRAWING NO. W-16
APPROVED: XXX		

DATE:	03/17/23
SCALE:	1"=20'
DESIGN BY:	LZG
DRAWN BY:	LZG
CHECKED BY:	CEE
APPROVED BY:	CEE

BY:	DATE:	DESCRIPTION:

CRAVEN • THOMPSON AND ASSOCIATES, INC.
ENGINEERS • PLANNERS • SURVEYORS
3563 N.W. 53RD STREET, FORT LAUDERDALE, FLORIDA 33309
FAX: (954) 739-6409 TEL: (954) 739-6400
FLORIDA LICENSED ENGINEERING, SURVEYING & MAPPING BUSINESS No. 271
FLORIDA LICENSED LANDSCAPE ARCHITECTURE BUSINESS No. C000314

MATERIAL SHOWN HEREON IS THE PROPERTY OF CRAVEN, THOMPSON & ASSOCIATES, INC. AND SHALL NOT BE REPRODUCED OR USED, IN WHOLE OR IN PART WITHOUT WRITTEN PERMISSION OF CRAVEN•THOMPSON & ASSOCIATES, INC. COPYRIGHT © 2019

SOLESTE LA PIAZZA
HOLLYWOOD, FLORIDA

PREPARED FOR:
THE ESTATES COMPANIES

WATER AND SEWER DETAILS

Chad E. Edwards
Florida P.E. No. 59306

22-0064-001-01

C-17
SHEET 17 OF 17

CHAD E. EDWARDS, STATE OF FLORIDA
PROFESSIONAL ENGINEER, LICENSE NO. 59306
THIS ITEM HAS BEEN DIGITALLY SIGNED AND SEALED BY CHAD E. EDWARDS ON THE DATE INDICATED HERE.
PRINTED COPIES OF THIS DOCUMENT ARE NOT CONSIDERED SIGNED AND SEALED AND THE SIGNATURE MUST BE VERIFIED ON ANY ELECTRONIC COPIES

R:\Engineering\2022\22-0064-001-01 La Piazza\Drawings\22-0064 WSDT.dwg [C-17] Mar 17, 2023 4:03pm RBURKERT