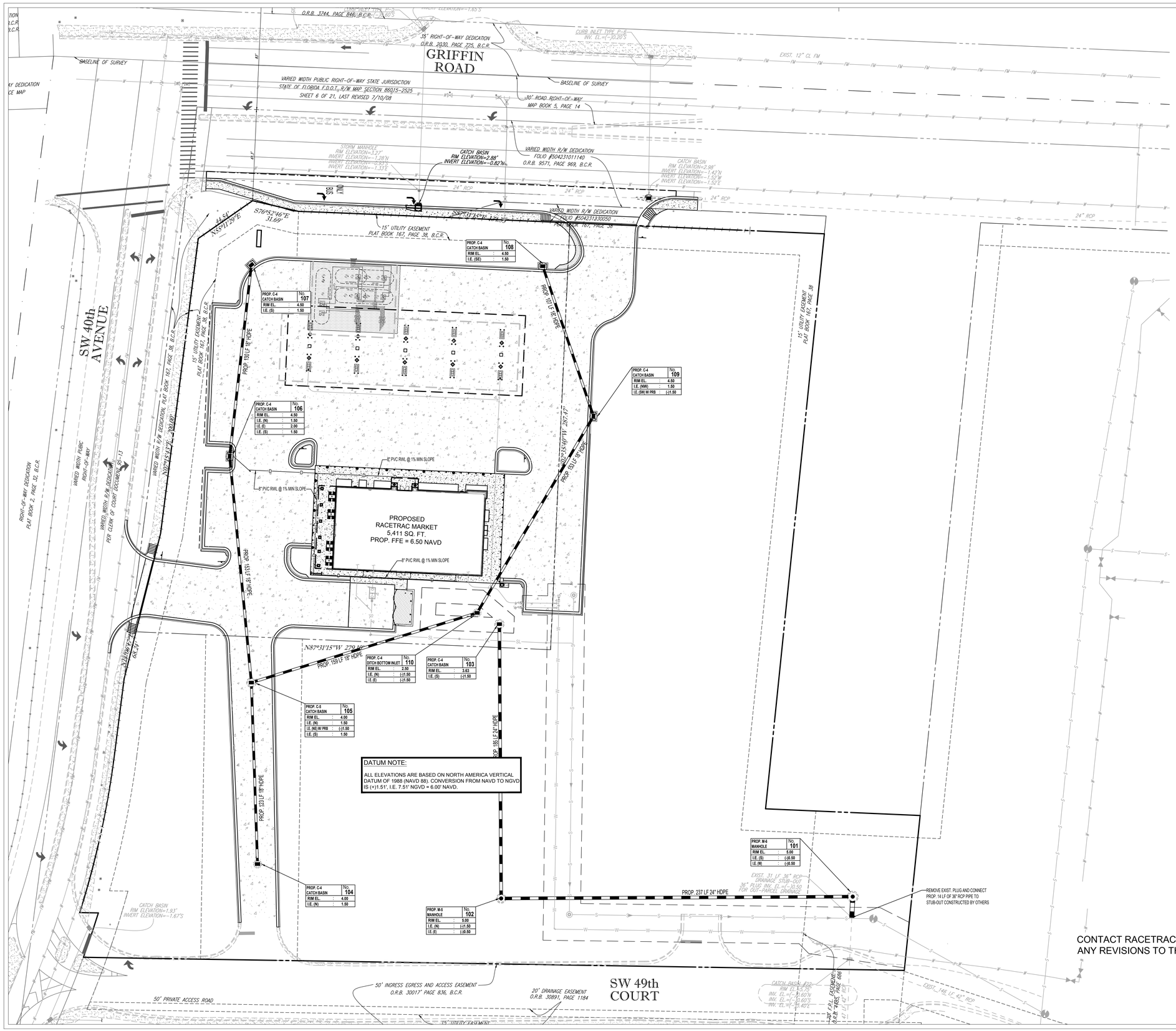

PROP. C-4 CATCH BASIN	No. 108
RIM EL.	4.50
I.E. (SE)	1.50

PROP. C-4 CATCH BASIN	No. 107
RIM EL.	4.50
I.E. (S)	1.50

PROP. C-4 CATCH BASIN	No. 109
RIM EL.	4.50
I.E. (NW)	1.50
I.E. (SW) W/ PRB	(-)1.50

PROP. C-4 CATCH BASIN	No. 106
RIM EL.	4.50
I.E. (N)	1.50
I.E. (E)	2.00
I.E. (S)	1.50

PROP. C-4 DITCH BOTTOM INLET	No. 110
RIM EL.	2.50
I.E. (N)	(-)1.50
I.E. (E)	(-)1.50

PROP. C-4 CATCH BASIN	No. 103
RIM EL.	3.63
I.E. (S)	(-)1.50

PROP. C-6 CATCH BASIN	No. 105
RIM EL.	4.00
I.E. (N)	1.50
I.E. (NE) W/ PRB	(-)1.50
I.E. (S)	1.50

PROP. C-4 CATCH BASIN	No. 104
RIM EL.	4.00
I.E. (N)	1.50

PROP. M-6 MANHOLE	No. 101
RIM EL.	5.00
I.E. (S)	(-)0.50
I.E. (W)	(-)0.50

PROP. M-6 MANHOLE	No. 102
RIM EL.	5.00
I.E. (N)	(-)1.50
I.E. (E)	(-)0.50

DATUM NOTE:

ALL ELEVATIONS ARE BASED ON NORTH AMERICA VERTICAL DATUM OF 1988 (NAVD 88). CONVERSION FROM NAVD TO NGVD IS (+)1.51', I.E. 7.51' NGVD = 6.00' NAVD.

CONSTRUCTION NOTES:

1. CONTRACTOR TO SAW-CUT AT ALL LOCATIONS OF REMOVAL OF EXISTING CONC. SIDEWALK, CONC. CURB AND ASPHALT UNLESS OTHERWISE NOTED. ALL BASE AND SUBASE MATERIAL SHALL BE REMOVED WITHIN THE PROPOSED LANDSCAPED AREA.
2. CONTRACTOR TO MATCH EXIST. GRADES AND TO CONSTRUCT A SMOOTH TRANSITION FROM EXISTING FACILITIES TO PROPOSED.
3. CONTRACTOR TO REMOVE ALL CONSTRUCTION DEBRIS FROM CONSTRUCTION SITE AND DISPOSE PER LOCAL ORDINANCES.
4. CONTRACTOR TO ENSURE ALL CONSTRUCTION IS IN ACCORDANCE WITH CITY DESIGN STANDARDS.
5. CONTRACTOR TO SOD ALL DISTURBED AREAS, SODDING INCLUDES MAINTAINING SLOPE AND SOD UNTIL COMPLETION AND ACCEPTANCE OF THE TOTAL PROJECT OR GROWTH IS ESTABLISHED WHICHEVER COMES LAST.
6. ALL EXISTING TRAFFIC SIGNS DISTURBED DURING CONSTRUCTION SHALL BE REINSTALLED WHERE APPLICABLE BY THE CONTRACTOR.
7. THESE PLANS REFLECT CONDITIONS KNOWN DURING PLAN DEVELOPMENT. IN THE EVENT THAT ACTUAL PHYSICAL CONDITIONS PREVENT THE APPLICATION OF THESE STANDARDS OR THE PROGRESSION OF THE WORK, THE CONTRACTOR SHALL NOTIFY THE ENGINEER PRIOR TO CONSTRUCTION OF AFFECTED AREA.
8. THE CONTRACTOR SHALL PROTECT ALL EXISTING STRUCTURES, STORM DRAINS, UTILITIES, AND OTHER FACILITIES TO REMAIN AND SHALL REPAIR ANY DAMAGES DUE TO HISHER CONSTRUCTION ACTIVITIES AT NO ADDITIONAL COST TO THE OWNER.
9. NOTIFY SUNSHINE STATE ONE CALL (1-800-432-4770) PRIOR TO CONSTRUCTION.
10. PROJECT BASED ON DESIGN SURVEY PREPARED BY OTHERS. DURATION OF CONSTRUCTION IN ACCORDANCE WITH FDOT STANDARD INDEX NO. 600.
11. THE CONTRACTOR SHALL NOT ENCROACH ONTO PRIVATE PROPERTY WITHOUT EASEMENTS NECESSARY FOR COMPLETION OF THE WORK.
12. THE EXISTING UNDERGROUND UTILITIES SHOWN ARE PER ABOVE GROUND SURVEY DATA AND UTILITY AS-BUILT DATA. THIS INFORMATION DOES NOT WARRANT EXACT SIZE AND LOCATION OF THE UTILITIES. ALSO, THERE MAY BE ADDITIONAL UTILITIES WITHIN THE LIMITS OF CONSTRUCTION THAT MAY BE AFFECTED. CONTRACTOR SHALL BE RESPONSIBLE FOR MAINTAINING AND PROTECTING EXISTING UTILITIES DURING THE COURSE OF CONSTRUCTION.
13. PLEASE SEE MEP PLANS FOR CONTINUATION OF ROOF LEADERS.
14. 2.0% MAXIMUM SLOPE ON HANDICAP SPACES AND ADA ACCESS WAYS.
15. ALL SIDEWALKS SHOULD HAVE A MAXIMUM CROSS SLOPE OF 2.0%
16. ALL GRADE SHOTS ARE TO BE EDGE OF PAVEMENT (EOP) UNLESS OTHERWISE NOTED.
17. ALL ELEVATIONS REFERENCE NGVD 1929

PAVING, GRADING & DRAINAGE LEGEND

EXISTING NOTE	TYPICAL NOTE TEXT	PROPOSED NOTE
W	UNDERGROUND WATER LINE	W
E	UNDERGROUND ELECTRIC LINE	E
T	UNDERGROUND TELEPHONE LINE	T
	STORM SEWER	
S	SANITARY SEWER MAIN	S
OH	OVERHEAD WIRE	
	HYDRANT	
S	SANITARY MANHOLE	
	STORM MANHOLE	
	CATCH BASIN	
	WATER METER	
	CLEAN OUT	

Know what's below. Call before you dig.

CONTACT RACETRAC PETROLEUM, INC. PROJECT MANAGER PRIOR TO ANY REVISIONS TO THE PLAN SUPPLIED BY RACETRAC PETROLEUM, INC.

30 15 0 30 60 90 120

GRAPHIC SCALE IN FEET

DATE	NO.
10/08/2018	
11/19/2018	

PRELIMINARY TAC MEETING
FINAL TAC MEETING

A. DETANCOURT, LICENSE No. 83361, November 5, 2018, STATE OF FLORIDA, PROFESSIONAL ENGINEER
THOMAS ENGINEERING GROUP
6300 NW 31ST AVE.
FORT LAUDERDALE, FL 33309
PH: (954) 202-7000
FX: (954) 202-7070
www.ThomasEngineeringGroup.com
FLORIDA BUSINESS LICENSE No. 27325

THESE PLANS ARE SUBJECT TO FEDERAL COPYRIGHT LAWS. ANY USE OF SAME WITHOUT THE EXPRESSED WRITTEN PERMISSION OF RACETRAC PETROLEUM, INC. IS PROHIBITED.

RACETRAC PETROLEUM, INC.
GRIFFIN ROAD & SW 40TH AVENUE
HOLLYWOOD, BROWARD COUNTY
FLORIDA 33312

DRAINAGE PLAN
RACETRAC MARKET
3990 GRIFFIN ROAD
Hollywood, Florida 33312

DATE	09/17/2018
SCALE	1" = 30'
DRAWN-BY	AG
DRAWING NAME:	
C5.1	1
SHEET NO.	VERSION

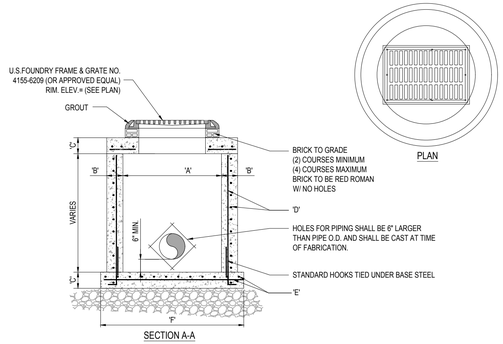

TYPE	"A"	"B"	"C"	"D"	"E"	"F"
C-4	4'-0" Ø	8"	8"	# 4 @ 12" C.C.E.W.	# 4 @ 12" C.C.E.W.	6'-4" Ø
C-5	5'-0" Ø	8"	8"	# 5 @ 12" C.C.E.W.	# 5 @ 12" C.C.E.W.	7'-4" Ø
C-6	6'-0" Ø	8"	8"	# 5 @ 12" C.C.E.W.	# 5 @ 6" C.C.E.W.	8'-4" Ø
C-7	7'-0" Ø	8"	8"	# 5 @ 12" C.C.E.W.	# 5 @ 6" C.C.E.W.	9'-4" Ø
C-8	8'-0" Ø	10"	10"	2- W.W.M. w/ # 4 @ 12" C.C. VERT	# 5 @ 6" C.C.E.W.	10'-8" Ø

1 PRECAST CIRCULAR CATCH BASIN

SCALE: NONE

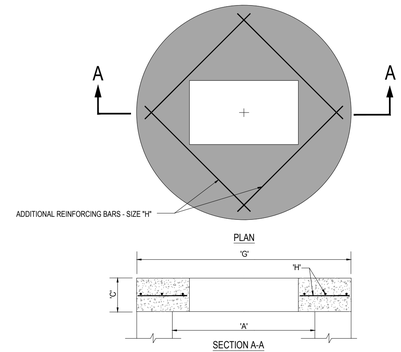

TYPE	"A"	"C"	"G"	"H"
C-4	4'-0" Ø	8"	5'-4" Ø	# 4 @ 6" C.C.E.W.
C-5	5'-0" Ø	8"	6'-4" Ø	# 5 @ 8" C.C.E.W.
C-6	6'-0" Ø	8"	7'-4" Ø	# 5 @ 6" C.C.E.W.
C-7	7'-0" Ø	8"	8'-4" Ø	# 5 @ 6" C.C.E.W.
C-8	8'-0" Ø	10"	9'-8" Ø	# 5 @ 6" C.C.E.W.

2 PRECAST CONCRETE-TOP SLAB

SCALE: NONE

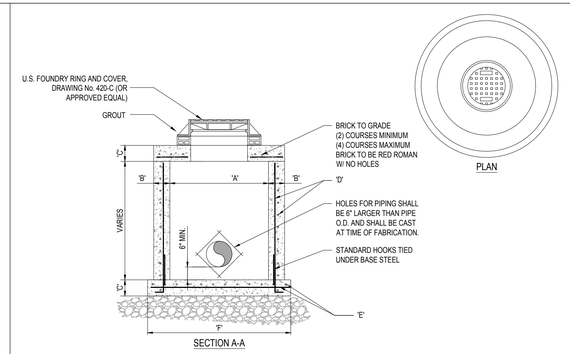

TYPE	"A"	"B"	"C"	"D"	"E"	"F"
M-4	4'-0" Ø	8"	8"	# 4 @ 12" C.C.E.W.	# 4 @ 12" C.C.E.W.	6'-4" Ø
M-5	5'-0" Ø	8"	8"	# 5 @ 12" C.C.E.W.	# 5 @ 12" C.C.E.W.	7'-4" Ø
M-6	6'-0" Ø	8"	8"	# 5 @ 12" C.C.E.W.	# 5 @ 6" C.C.E.W.	8'-4" Ø
M-7	7'-0" Ø	8"	8"	# 5 @ 12" C.C.E.W.	# 5 @ 6" C.C.E.W.	9'-4" Ø
M-8	8'-0" Ø	10"	10"	2- W.W.M. w/ 4 @ 12" C.C. VERT #	# 5 @ 6" C.C.E.W.	10'-8" Ø

3 PRECAST CIRCULAR DRAINAGE MANHOLE

SCALE: NONE

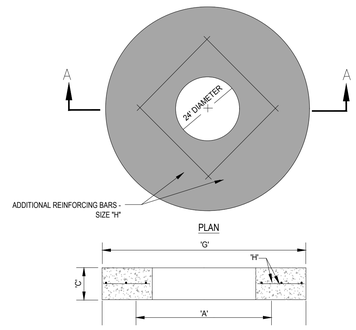

TYPE	"A"	"C"	"G"	"H"
M-4	4'-0" Ø	8"	5'-4" Ø	# 4 @ 6" C.C.E.W.
M-5	5'-0" Ø	8"	6'-4" Ø	# 5 @ 8" C.C.E.W.
M-6	6'-0" Ø	8"	7'-4" Ø	# 5 @ 6" C.C.E.W.
M-7	7'-0" Ø	8"	8'-4" Ø	# 5 @ 6" C.C.E.W.
M-8	8'-0" Ø	10"	9'-8" Ø	# 5 @ 6" C.C.E.W.

4 PRECAST CONCRETE-TOP SLAB FOR DRAINAGE MANHOLES

SCALE: NONE

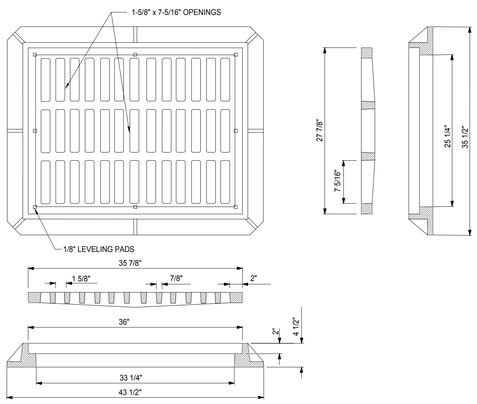

NOTE:

1. GRATE TO BE TYPE U.S.F. No. 4155-6209

5 FRAME AND GRATE DETAIL

SCALE: NONE

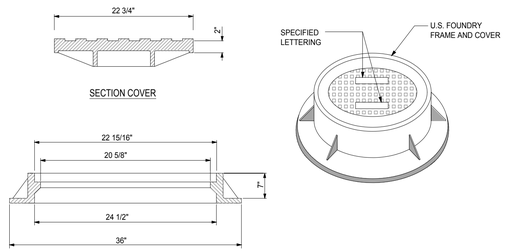

NOTE:

1. RING AND COVER TO BE TYPE U.S.F. No. 420-C

6 MANHOLE FRAME DETAIL

SCALE: NONE

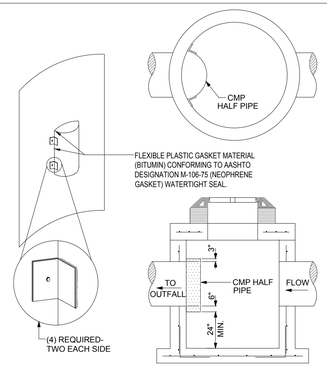

NOTES:

1. HALF ROUND PLATE TO BE WELDED TO TOP FOR POLLUTION RETARDANT BASIN.
2. SEE PRECAST CIRULAR CATCH BASIN DETAIL FOR CONSTRUCTION SPECIFICATIONS.
3. THE HALF ROUND PIPE SHALL BE ONE SIZE LARGER THAN DISCHARGE PIPE.
4. BOLT ASSEMBLY TO WALLS OF STRUCTURE AT 15" ON CENTER WITH 3/4" GALVANIZED BOLTS.

7 POLLUTION RETARDANT BAFFLE DETAIL

SCALE: NONE

DATE	NO.
10/08/2018	
11/19/2018	

PRELIMINARY TAC MEETING
FINAL TAC MEETING

BETANCOURT, WASH A. LICENSE No. 83361 STATE OF FLORIDA PROFESSIONAL ENGINEER
November 5, 2018
FLORIDA BUSINESS CERTIFICATE No. 27328

THOMAS ENGINEERING GROUP
6300 NW 31ST AVE.
FORT LAUDERDALE, FL 33309
PH. (954) 202-7070
FX. (954) 202-7070
www.Thomasengineeringgroup.com

THESE PLANS ARE SUBJECT TO FEDERAL COPYRIGHT LAWS: ANY USE OF SAME WITHOUT THE EXPRESSED WRITTEN PERMISSION OF RACETRAC PETROLEUM, INC. IS PROHIBITED.

RACETRAC PETROLEUM, INC.
GRIFFIN ROAD & SW 40TH AVENUE
HOLLYWOOD, BROWARD COUNTY
FLORIDA 33312

DRAINAGE DETAILS

RACETRAC MARKET

3990 GRIFFIN ROAD
Hollywood, Florida 33312

DATE	09/17/2018
SCALE	
DRAWN-BY	AG
DRAWING NAME:	
C5.2	1
SHEET NO.	VERSION

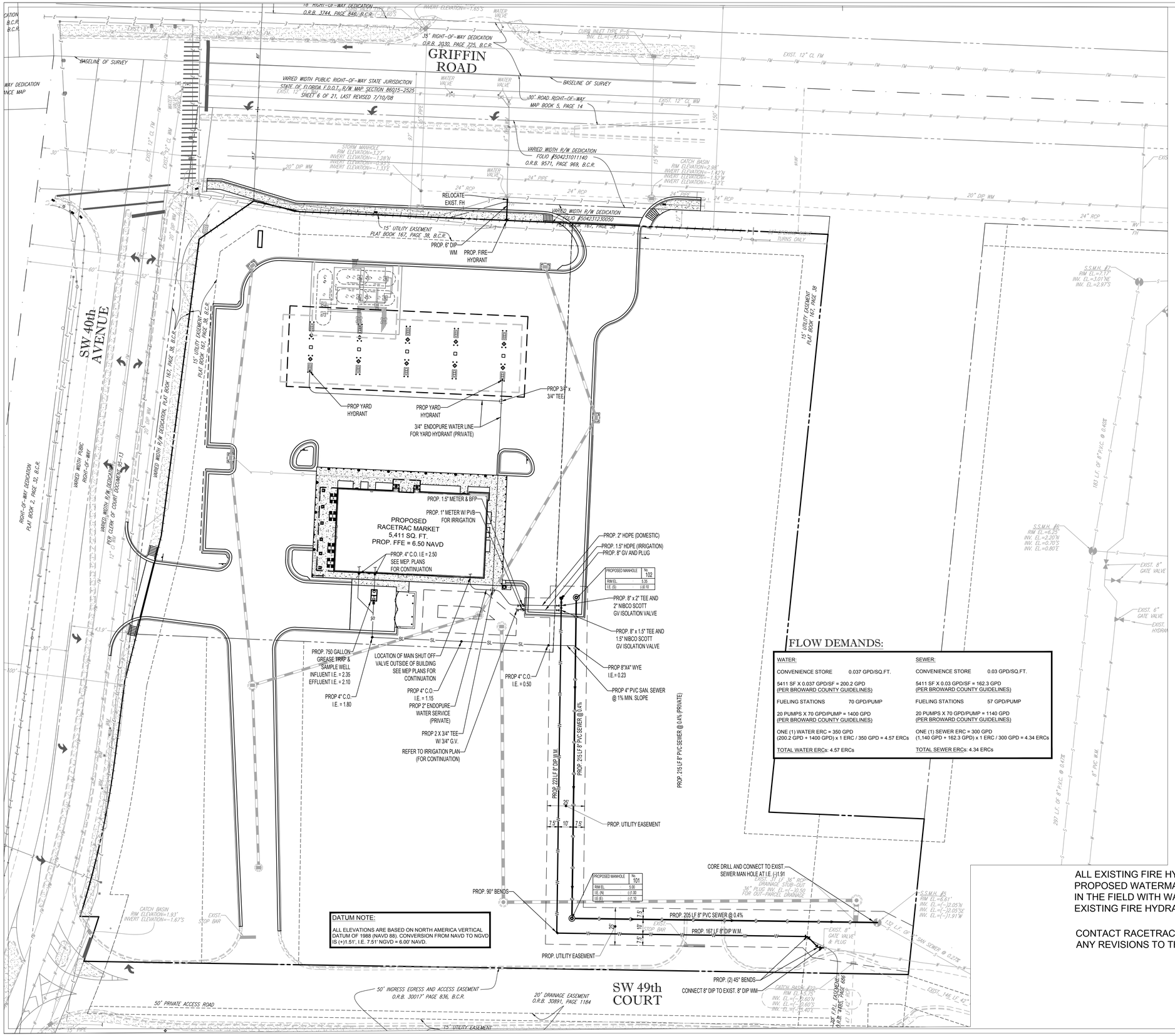

FLOW DEMANDS:

WATER:		SEWER:	
CONVENIENCE STORE	0.037 GPD/SQ.FT.	CONVENIENCE STORE	0.03 GPD/SQ.FT.
5411 SF X 0.037 GPD/SF = 200.2 GPD (PER BROWARD COUNTY GUIDELINES)		5411 SF X 0.03 GPD/SF = 162.3 GPD (PER BROWARD COUNTY GUIDELINES)	
FUELING STATIONS	70 GPD/PUMP	FUELING STATIONS	57 GPD/PUMP
20 PUMPS X 70 GPD/PUMP = 1400 GPD (PER BROWARD COUNTY GUIDELINES)		20 PUMPS X 70 GPD/PUMP = 1140 GPD (PER BROWARD COUNTY GUIDELINES)	
ONE (1) WATER ERC = 350 GPD (200.2 GPD + 1400 GPD) x 1 ERC / 350 GPD = 4.57 ERCs		ONE (1) SEWER ERC = 300 GPD (1,140 GPD + 162.3 GPD) x 1 ERC / 300 GPD = 4.34 ERCs	
TOTAL WATER ERCs: 4.57 ERCs		TOTAL SEWER ERCs: 4.34 ERCs	

DATUM NOTE:

ALL ELEVATIONS ARE BASED ON NORTH AMERICA VERTICAL DATUM OF 1988 (NAVD 88). CONVERSION FROM NAVD TO NGVD IS (+)1.51', I.E. 7.51' NGVD = 6.00' NAVD.

Know what's **below.** Call before you dig.

UTILITY NOTES:

1. CONTRACTOR IS RESPONSIBLE FOR VERIFYING ALL UTILITIES AND NOTIFYING THE APPROPRIATE UTILITY COMPANY PRIOR TO BEGINNING CONSTRUCTION.
2. THE LOCATION AND/OR ELEVATION OF EXISTING UTILITIES AS SHOWN ON THESE PLANS IS BASED ON RECORDS OF THE VARIOUS UTILITY COMPANIES AND, WHERE POSSIBLE, MEASUREMENTS TAKEN IN THE FIELD. THE INFORMATION IS NOT TO BE RELIED ON AS BEING EXACT OR COMPLETE. THE CONTRACTOR MUST CALL THE APPROPRIATE UTILITY COMPANY AT LEAST 48 HOURS BEFORE ANY EXCAVATION TO REQUEST EXACT FIELD LOCATION OF THE UTILITIES. IT SHALL BE THE RESPONSIBILITY OF THE CONTRACTOR TO RELOCATE ALL EXISTING UTILITIES WHICH CONFLICT WITH THE PROPOSED IMPROVEMENTS SHOWN ON THE PLANS.
3. CONTRACTOR SHALL VERIFY HORIZONTAL AND VERTICAL LOCATION OF ALL EXISTING STORM SEWER STRUCTURES, PIPES, AND ALL UTILITIES PRIOR TO CONSTRUCTION.
4. CONTRACTOR IS RESPONSIBLE FOR REPAIRS OF DAMAGE TO ANY EXISTING IMPROVEMENTS DURING CONSTRUCTION, SUCH AS, BUT NOT LIMITED TO, UTILITIES, PAVEMENT, STRIPING, CURBS, ETC. REPAIRS SHALL BE EQUAL TO OR BETTER THAN EXISTING CONDITIONS.
5. CONTRACTOR SHALL REFER TO ARCHITECTS PLANS AND SPECIFICATIONS FOR ACTUAL LOCATION OF ALL UTILITY ENTRANCES CONTRACTOR SHALL COORDINATE INSTALLATION OF UTILITIES IN SUCH A MANNER AS TO AVOID CONFLICTS AND ASSURE PROPER DEPTHS ARE ACHIEVED AS WELL AS COORDINATING WITH CITY UTILITY REQUIREMENTS AS TO LOCATIONS AND SCHEDULING FOR TIE-INS/CONNECTIONS PRIOR TO CONNECTING EXISTING FACILITIES.
6. CONTRACTOR SHALL COORDINATE WITH ARCHITECTURAL PLANS, POWER COMPANY, & TELEPHONE COMPANY FOR ACTUAL ROUTING OF POWER AND TELEPHONE SERVICE TO BUILDING.
7. SEE DETAIL SHEETS FOR BACKFILLING AND COMPACTION REQUIREMENTS ON UTILITY TRENCHES.
8. CONTRACTOR SHALL COMPLY TO THE FULLEST EXTENT WITH THE LATEST STANDARD OF OSHA DIRECTIVES OR ANY OTHER AGENCY HAVING JURISDICTION FOR EXCAVATION AND TRENCHING PROCEDURES. THE CONTRACTOR SHALL USE SUPPORT SYSTEMS, SLOPING, BENCHING, AND OTHER MEANS OF PROTECTION. THIS TO INCLUDE BUT NOT LIMITED TO, ACCESS AND EGRESS FROM ALL EXCAVATION AND TRENCHING. CONTRACTOR IS RESPONSIBLE TO COMPLY WITH PERFORMANCE CRITERIA FOR OSHA.
9. CONTRACTOR SHALL COORDINATE WITH OTHER UTILITIES TO ASSURE PROPER DEPTH AND PREVENT ANY CONFLICT OF UTILITIES.
10. CONTRACTOR SHALL GROUT AROUND ALL PIPE ENTRANCES TO SANITARY SEWER MANHOLES WITH NON-SHRINKING GROUT TO ASSURE CONNECTION IS WATER TIGHT.
11. CONTRACTOR SHALL ON ALL UTILITIES, COORDINATE INSPECTION WITH THE APPROPRIATE AUTHORITIES PRIOR TO COVERING TRENCHES AT INSTALLATION.
12. THE CONTRACTOR SHALL CONDUCT ALL REQUIRED TESTS TO THE SATISFACTION OF THE RESPECTIVE UTILITY COMPANIES AND OWNERS INSPECTING AUTHORITIES.
13. SITE CONTRACTOR TO COORDINATE PROPOSED RECONNECTION OF ALL UTILITIES WITH ARCHITECTURAL PLANS AS WELL AS UTILITY COMPANIES AND BUILDING CONTRACTOR. THE GENERAL CONTRACTOR IS RESPONSIBLE FOR ANY AND ALL EXPENSES THAT RESULT FROM DELAYED OR FAILED TEST DURING ANY PHASE OF THE CONSTRUCTION PROCESS. THIS INCLUDES FEES INCURRED THROUGH RESCHEDULING OF ANY RACETRAC VENDORS OR EQUIPMENT TO ACCOMMODATE.
14. EXISTING UTILITY LINES SHOWN ARE APPROXIMATE LOCATIONS ONLY. THE CONTRACTOR SHALL FIELD VERIFY ALL EXISTING UTILITY LINE LOCATIONS PRIOR TO ANY CONSTRUCTION. ANY DEVIATIONS FROM THE DESIGN LOCATIONS SHALL BE REPORTED TO THE OWNER OR ENGINEER PRIOR TO CONSTRUCTION.
15. CONTRACTOR SHALL REFER TO PLANS BY OTHERS FOR ENTRY LOCATION OF ALL WATER, SEWER SERVICE, ELECTRICAL, AND TELEPHONE SERVICE. CONTRACTOR SHALL COORDINATE INSTALLATION OF UTILITIES IN SUCH A MANNER AS TO AVOID CONFLICTS AND ASSURE PROPER DEPTHS ARE ACHIEVED AS WELL AS COORDINATING WITH THE REGULATORY AGENCY AS TO THE LOCATION AND TIE-INS/CONNECTIONS TO THEIR FACILITIES.
16. SEE COVER SHEET FOR LIST OF UTILITY COMPANIES AND CONTACT PERSONS.
17. THE CONTRACTOR SHALL COORDINATE THE INSTALLATION OF ALL UNDERGROUND UTILITIES WITH HIS WORK. ALL UNDERGROUND UTILITIES (WATER, SANITARY SEWER, STORM SEWER, ELECTRICAL CONDUIT, IRRIGATION SYSTEMS, AND ANY OTHER MISC. UTILITIES) SHALL BE IN PLACE PRIOR TO THE PLACEMENT OF BASE COURSE MATERIAL, AND THE PLACEMENT OF ANY APPROPRIATE SOIL STABILIZATION TECHNIQUE.
18. CONTRACTOR SHALL PROVIDE BOLLARDS FOR PROTECTION OF ALL ABOVE GROUND UTILITIES AND APPURTENANCES ADJACENT TO DRIVE AREAS.
19. CONTRACTOR TO VERIFY LOCATION AND ELEVATION OF EXISTING UTILITIES AND NOTIFY ENGINEER OF RECORD OF ANY DISCREPANCIES.

UTILITY LEGEND

EXISTING NOTE	TYPICAL NOTE TEXT	PROPOSED NOTE
W	UNDERGROUND WATER LINE	W
E	UNDERGROUND ELECTRIC LINE	E
T	UNDERGROUND TELEPHONE LINE	T
	STORM SEWER	
S	SANITARY SEWER MAIN	S
OH	OVERHEAD WIRE	
	HYDRANT	
S	SANITARY MANHOLE	
D	STORM MANHOLE	
	CATCH BASIN	
	WATER METER	
	BACKFLOW PREVENTER	
	CLEAN OUT	

ALL EXISTING FIRE HYDRANTS SHALL BE RECONNECTED TO THE PROPOSED WATERMAIN. FIELD OPERATIONS SECTION WILL COORDINATE IN THE FIELD WITH WATER DISTRIBUTION DIVISION TO DETERMINE IF AN EXISTING FIRE HYDRANT SHALL BE REPLACED AS NEEDED OR REQUIRED.

CONTACT RACETRAC PETROLEUM, INC. PROJECT MANAGER PRIOR TO ANY REVISIONS TO THE PLAN SUPPLIED BY RACETRAC PETROLEUM, INC.

30 15 0 30 60 90 120

GRAPHIC SCALE IN FEET

DATE	NO.	
10/08/2018		PRELIMINARY TAC MEETING
11/19/2018		FINAL TAC MEETING

BETANCOURT, WASH A. LICENSE No. 83361 STATE OF FLORIDA PROFESSIONAL ENGINEER November 5, 2018
FLORIDA BUSINESS LICENSE No. 27325

THOMAS ENGINEERING GROUP
8300 NW 31ST AVE.
FORT LAUDERDALE, FL 33309
PH: (954) 202-7070
FX: (954) 202-7070
www.ThomasEngineeringGroup.com

THESE PLANS ARE SUBJECT TO FEDERAL COPYRIGHT LAWS: ANY USE OF SAME WITHOUT THE EXPRESS WRITTEN PERMISSION OF RACETRAC PETROLEUM, INC. IS PROHIBITED.

RACETRAC PETROLEUM, INC.
GRIFFIN ROAD & SW 40TH AVENUE
HOLLYWOOD, BROWARD COUNTY
FLORIDA 33312

UTILITY PLAN
RACETRAC MARKET
3990 GRIFFIN ROAD
Hollywood, Florida 33312

DATE	09/17/2018
SCALE	1" = 30'
DRAWN-BY	AG
DRAWING NAME:	
C6.1	1
SHEET NO.	VERSION

WATER METER SERVICE NOTES:

1. SUCCESSIVE TAPS INTO THE WATER MAIN SHALL BE SPACED NOT LESS THAN 18" ON CENTER.
2. P.E. TUBING SHALL BE IN ACCORDANCE WITH THE LATEST EDITION OF AWWA STANDARD C901, "POLYETHYLENE (PE) PRESSURE PIPE AND TUBING, 1/2 IN. (13mm) THROUGH 3 IN. (76 mm), FOR WATER SERVICE".
3. SERVICE PIPE SHALL BE THE SAME SIZE AS THE WATER METER EXCEPT THAT NO SERVICE PIPE SHALL BE SMALLER THAN 1" DIAMETER.
4. SERVICE PIPE CROSSING UNDER THE ENTIRE WIDTH OF A ROADWAY PAVEMENT MUST BE 2" MINIMUM UNLESS OTHERWISE DIRECTED BY THE CITY.
5. THE 3" CASING UNDER THE ROAD IS TO BE USED ONLY WHEN THE WATER MAIN RUNS WITHIN THE SWALE ON THE OPPOSITE SIDE OF THE ROAD FROM THE METER SERVICE. ALL CASING PIPE SHALL EXTEND A MINIMUM OF 2' BEYOND THE EDGE OF PAVED STREETS.
6. APPROVED TYPE COPPER TUBING MAY BE USED AT THE CITY'S DISCRETION.
7. FOR NEW METER INSTALLATIONS, ALL SADDLES, VALVES, PIPING, FITTINGS,CURB STOPS, METER VALVES, METER COUPLINGS, METER VAULTS AND COVERS SHALL BE FURNISHED AND INSTALLED BY THE CONTRACTOR.
8. THE WATER METERS WILL BE PROVIDED BY THE CITY OF HOLLYWOOD AND INSTALLED BY THE CONTRACTOR.
9. FOR METER RELOCATIONS, ALL SADDLES, VALVES, PIPING, FITTINGS, CURB STOPS, METER VALVES, METER COUPLINGS, METER VAULTS AND COVERS SHALL BE FURNISHED AND INSTALLED BY THE CONTRACTOR.
10. THE EXISTING WATER METER TO BE RELOCATED AND INSTALLED BY CONTRACTOR.
11. FOR EXISTING METERS ABUTTING THE RIGHT-OF-WAY THAT ARE BEING DISCONNECTED FROM EXISTING MAINS AND RECONNECTED TO NEW MAINS, THE CONTRACTOR SHALL:
    a. CUT AND PLUG THE EXISTING SERVICE LINE AT THE MAIN AND AT THE METER, AND REMOVE THE EXISTING BALL VALVE CURB STOP.
    b. FURNISH AND INSTALL SERVICE SADDLE, CORPORATION STOP OR SERVICE VALVE AND VALVE BOX, PIPING AND FITTINGS UP TO AND INCLUDING THE BALL VALVE CURB STOP.
12. THE ELEVATION AT THE TOP OF THE METER BOX SHALL MATCH THE ELEVATION OF THE BACK OF SIDEWALK.
13. AS PART OF THE SERVICE INSTALLATION, THE CONTRACTOR SHALL RESTORE THE RIGHT-OF-WAY TO MATCH EXISTING CONDITIONS, INCLUDING ROADWAY PAVEMENT, PAVEMENT MARKINGS AND RPMs, CONCRETE CURBS, SIDEWALKS, RAMPS (INCLUDING DETECTABLE WARNING SURFACE), SODDING, AND ALL OTHER IMPROVEMENTS REMOVED OR DAMAGED DURING THE SERVICE INSTALLATION.
14. FOR UNPAVED AREAS, THE MINIMUM GROUND COVER ACCEPTED BY THE CITY IS SODDING.

ISSUED: 03/01/99	DEPARTMENT OF PUBLIC UTILITIES STANDARD DETAIL	REVISED: 06/08/2014
DRAWN: EAM	WATER METER SERVICE NOTES FOR 5/8" THROUGH 2" METERS	DRAWING NO. W-O7
APPROVED: XXX		

WATER NOTES:

1. NEW OR RELOCATED UNDERGROUND WATER MAINS INCLUDED IN THIS PROJECT THAT WILL CROSS ANY EXISTING OR PROPOSED GRAVITY OR VACUUM-TYPE SANITARY SEWER OR STORM SEWER WILL BE LAID SO THE OUTSIDE OF THE WATER MAIN IS AT LEAST SIX INCHES ABOVE THE OTHER PIPELINE OR AT LEAST 12 INCHES BELOW THE OTHER PIPELINE.
2. NEW OR RELOCATED UNDERGROUND WATER MAINS INCLUDED IN THIS PROJECT THAT WILL CROSS ANY EXISTING OR PROPOSED PRESSURE-TYPE SANITARY SEWER, WASTEWATER OR STORM WATER FORCE MAIN, OR PIPELINE CONVEYING RECLAIMED WATER WILL BE LAID SO THE OUTSIDE OF THE WATER MAIN IS AT LEAST 12 INCHES ABOVE OR BELOW THE OTHER PIPELINE. [FAC 62-555.314(2); EXCEPTIONS ALLOWED UNDER FAC 62-555.314(5)].
3. AT ALL UTILITY CROSSINGS DESCRIBED ABOVE, ONE FULL LENGTH OF WATER MAIN PIPE WILL BE CENTERED ABOVE OR BELOW THE OTHER PIPELINE SO THE WATER MAIN JOINTS WILL BE AS FAR AS POSSIBLE FROM THE OTHER PIPELINE, OR THE PIPES WILL BE ARRANGED SO THAT ALL WATER MAIN JOINTS ARE AT LEAST THREE FEET FROM ALL JOINTS IN VACUUM-TYPE SANITARY SEWERS, STORM SEWERS, STORM WATER FORCE MAINS, OR PIPELINES CONVEYING RECLAIMED WATER REGULATED UNDER PART III OF CHAPTER 62-610, F.A.C., AND AT LEAST SIX FEET FROM ALL JOINTS IN GRAVITY OR PRESSURE-TYPE SANITARY SEWERS, WASTEWATER FORCE MAINS, OR PIPELINES CONVEYING RECLAIMED WATER NOT REGULATED UNDER PART III OF CHAPTER 62-610, F.A.C. [FAC 62-555.314(2); EXCEPTIONS ALLOWED UNDER FAC 62-555.314(5)].
4. NEW UNDERGROUND WATER MAINS INCLUDED IN THIS PROJECT TO BE DUCTILE IRON PIPE (D.I.P.) WHEN CROSSING BELOW SANITARY SEWER MAINS.
5. POLYETHYLENE ENCASEMENT MATERIAL SHALL BE USED TO ENCASE ALL BURIED DUCTILE IRON PIPE, FITTINGS, VALVES, RODS, AND APPURTENANCES IN ACCORDANCE WITH AWWA C105, METHOD A. THE POLYETHYLENE TUBING SHALL BE CUT TWO FEET LONGER THAN THE PIPE SECTION AND SHALL OVERLAP THE ENDS OF THE PIPE BY ONE FOOT. THE POLYETHYLENE TUBING SHALL BE GATHERED AND LAPPED TO PROVIDE A SNUG FIT AND SHALL BE SECURED AT QUARTER POINTS WITH POLYETHYLENE TAPE. EACH END OF THE POLYETHYLENE TUBING SHALL BE SECURED WITH A WRAP OF POLYETHYLENE TAPE.
6. THE POLYETHYLENE TUBING SHALL PREVENT CONTACT BETWEEN THE PIPE AND BEDDING MATERIAL, BUT IS NOT INTENDED TO BE A COMPLETELY AIRTIGHT AND WATERTIGHT ENCLOSURE. DAMAGED POLYETHYLENE TUBING SHALL BE REPAIRED IN A WORKMANLIKE MANNER USING POLYETHYLENE TAPE, OR THE DAMAGED SECTION SHALL BE REPLACED. POLY WRAP WILL NOT BE PAID FOR AS A SEPARATE BID ITEM. IT SHALL BE CONSIDERED TO BE A PART OF THE PRICE BID FOR WATER MAINS.
7. FIRE HYDRANT BARRELS SHALL BE ENCASED IN POLY WRAP UP TO THE GROUND SURFACE AND THE WEEP HOLES SHALL NOT BE COVERED BY THE POLY WRAP.
8. GATE VALVES FOR USE WITH PIPE LESS THAN THREE INCHES (3") IN DIAMETER SHALL BE RATED FOR TWO HUNDRED (200) PSI WORKING PRESSURE, NON-SHOCK, BLOCK PATTERN, SCREWED BONNET, NON-RISING STEM, BRASS BODY, AND SOLID WEDGE. THEY SHALL BE STANDARD THREADED FOR PVC PIPE AND HAVE A MALLEABLE IRON HANDWHEEL. GATE VALVES LESS THAN THREE INCHES (3") IN DIAMETER SHALL BE NIBCO-SCOTT T-113 LF WITH NO SUBSTITUTIONS ALLOWED. LARGE GATE VALVES OVER 3" THRU 16" IN DIAMETER, MUST BE RESILIENT SEAT AND BIDIRECTIONAL FLOW ONLY. MANUFACTURERS: MUELLER, AMERICAN DARLING, AVK, OR CITY APPROVED EQUAL. VALVES FOR SPECIAL APPLICATION WILL REQUIRE CITY UTILITY APPROVAL.

ISSUED: 03/01/99	DEPARTMENT OF PUBLIC UTILITIES STANDARD DETAIL	REVISED: 06/08/2014
DRAWN: EAM	WATER SYSTEM NOTES	DRAWING NO. W-01
APPROVED: XXX		

WATER NOTES CONTINUED:

9. VALVE BOXES AND COVERS FOR ALL SIZE VALVES SHALL BE OF CAST IRON CONSTRUCTION AND ADJUSTABLE SCREW-ON TYPE. THE LID SHALL HAVE CAST IN THE METAL THE WORD "WATER" FOR THE WATER LINES. ALL VALVE BOXES SHALL BE SIX INCH (6") NOMINAL DIAMETER AND SHALL BE SUITABLE FOR DEPTHS OF THE PARTICULAR VALVE. THE STEM OF THE BURIED VALVE SHALL BE WITHIN TWENTY-FOUR INCHES (24") OF THE FINISHED GRADE UNLESS OTHERWISE APPROVED BY THE CITY. VALVE BOXES SHALL BE PROVIDED AT A MINIMUM OF THREE JOINTS (60 FEET) FROM ANY FITTING.
10. FIRE HYDRANTS: PRESENTLY CITY OF HOLLYWOOD UTILITIES SPECIFICATIONS ALLOW ONLY MANUFACTURERS: MUELLER MODEL SUPER CENTURION 200 5¼" SIZE REFERENCE CATALOG NO. A-423 AND AMERICAN DARLING MODEL B-84-B 5¼" SIZE. ANY DEVIATION FROM REQUIRED SPECIFICATIONS WILL REQUIRE CITY OF HOLLYWOOD UTILITIES APPROVAL.
11. ALL WATER MAIN INSTALLATIONS SHALL COMPLY WITH THE COLOR CODING REQUIREMENTS OF CHAPTER 62-555.320 F.A.C.
12. ALL PVC PIPE SHALL CONFORM TO THE REQUIREMENTS OF ANSI/AWWA C900 LATEST REVISION AND CLASS DR 18. ALL DIP WATER MAINS SHALL BE DUCTILE IRON PRESSURE CLASS 350, WITH WALL THICKNESS COMPLYING WITH CLASS 52. ALL DUCTILE IRON PIPE SHALL CONFORM TO THE REQUIREMENTS OF ANSI/AWWA C151/A21.51-02 AND BE CEMENT LINED AND SEAL COATED PER ANSI/AWWA C104/A21.4-03.
13. FITTINGS SHALL BE DUCTILE IRON, MEETING ANSI/AWWA C153/A21.53-00 SPECIFICATIONS, WITH 350 PSI MINIMUM WORKING PRESSURE. FITTINGS MUST BE CEMENT LINED AND SEAL COATED PER ANSI/AWWA C104/A21.4-03. ALL DUCTILE IRON PIPE AND FITTINGS MUST BE MANUFACTURED IN THE UNITED STATES OF AMERICA.
14. ALL DUCTILE IRON PIPE TO BE MECHANICAL JOINTS, WRAPPED IN POLY. ADEQUATE PROTECTIVE MEASURES AGAINST CORROSION SHALL BE USED AS DETERMINED BY DESIGN.
15. GATE VALVES 4" AND LARGER SHALL BE RESILIENT SEAT AND SHALL MEET ANSI/AWWA C-509-01 SPECIFICATIONS, LATEST REVISION. VALVES MUST BE MUELLER (O.A.E.). VALVE BOXES SHALL BE TYLER UNION, CONTROL/GATE VALVES 3" AND SMALLER SHALL BE NIBCO T-113 LF. NO SUBSTITUTIONS.
16. PAVEMENT RESTORATION SHALL BE CARRIED OUT IN ACCORDANCE WITH THE REQUIREMENTS OF THE CITY.
17. ALL TRENCHING, PIPE LAYING, BACKFILL, PRESSURE TESTING, AND DISINFECTING MUST COMPLY WITH THE CITY OF HOLLYWOOD SPECIFICATIONS.
18. THE MINIMUM DEPTH OF COVER OVER WATER MAINS IS 30" (DIP) OR 36" (PVC).
19. MINIMUM CLEARANCE BETWEEN STORM STRUCTURES AND WATER MAINS SHALL BE 2', AND MAXIMUM DEFLECTION PER EACH JOINT SHALL BE 50% OF MANUFACTURES RECOMMENDATION (MAXIMUM) WHERE DEFLECTION IS REQUIRED.
20. TAPPING SLEEVES SHALL BE MUELLER H-615 (O.A.E.). TAPPING VALVES 4" AND LARGER SHALL BE RESILIENT WEDGE TYPE MEETING ANSI/AWWA C509-01. ALL TAPPING VALVES SHALL HAVE A CAST-IN ALIGNMENT RING AND BE CAPABLE OF ACCEPTING A FULL-SIZE CUTTER.
21. CONTRACTOR SHALL BE RESPONSIBLE FOR IDENTIFYING CONFLICTS WITH WATER MAINS PLACED AT MINIMUM COVER. IN CASE OF CONFLICT, WATER MAIN SHALL BE LOWERED TO PASS UNDER CONFLICTS WITH 18" MINIMUM SEPARATION. NO ADDITIONAL PAYMENT SHALL BE DUE TO CONTRACTOR FOR LOWERING THE MAIN OR THE ADDITIONAL FITTINGS USED THEREON.

ISSUED: 03/01/99	DEPARTMENT OF PUBLIC UTILITIES STANDARD DETAIL	REVISED: 06/08/2014
DRAWN: EAM	WATER NOTES	DRAWING NO. W-01.1
APPROVED: XXX		

WATER NOTES CONTINUED:

22. PIPE JOINT RESTRAINT SHALL BE PROVIDED BY THE USE OF DUCTILE IRON FOLLOWER GLANDS MANUFACTURED TO ASTM A 536-80. TWIST-OFF NUTS SHALL BE USED TO ENSURE PROPER ACTUATING OF THE RESTRAINING DEVICES. THE MECHANICAL JOINT RESTRAINING DEVICES SHALL HAVE A WORKING PRESSURE OF 250 PSI MINIMUM, WITH A MINIMUM SAFETY FACTOR OF 2:1, AND SHALL BE EBAA IRON INC., MEGALUG OR APPROVED EQUAL. JOINT RESTRAINTS SHALL BE PROVIDED AT A MINIMUM OF THREE JOINTS (60 FEET) FROM ANY FITTING.
23. WHENEVER IT IS NECESSARY, IN THE INTEREST OF SAFETY, TO BRACE THE SIDES OF A TRENCH, THE CONTRACTOR SHALL FURNISH, PUT IN PLACE AND MAINTAIN SUCH SHEETING OR BRACING AS MAY BE NECESSARY TO SUPPORT THE SIDES OF THE EXCAVATION TO ENSURE PERSONNEL SAFETY, AND TO PREVENT MOVEMENT WHICH CAN IN ANY WAY DAMAGE THE WORK OR ENDANGER ADJACENT STRUCTURES. THE CONTRACTOR SHALL BE SOLELY RESPONSIBLE FOR THE SEQUENCE, METHODS AND MEANS OF CONSTRUCTION, AND FOR THE IMPLEMENTATION OF ALL OSHA AND OTHER SAFETY REQUIREMENTS.

ISSUED: 03/01/99	DEPARTMENT OF PUBLIC UTILITIES STANDARD DETAIL	REVISED: 06/08/2014
DRAWN: EAM	WATER NOTES	DRAWING NO. W-02
APPROVED: XXX		

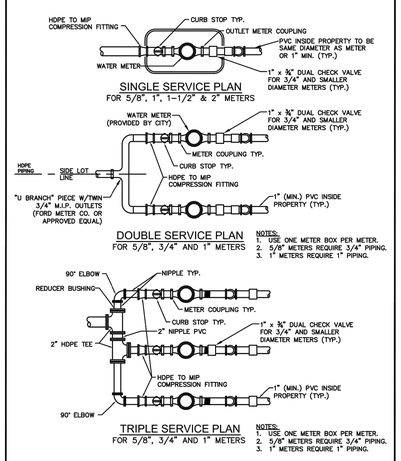

ISSUED: 03/01/99	DEPARTMENT OF PUBLIC UTILITIES STANDARD DETAIL	REVISED: 06/08/2014
DRAWN: EAM	TYPICAL 5/8", 1", 1-1/2" AND 2" METER INSTALLATION	DRAWING NO. W-06
APPROVED: XXX		

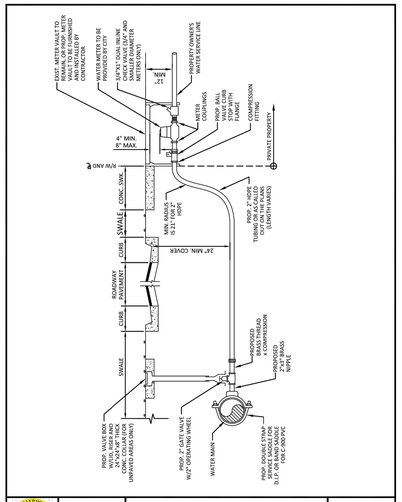

ISSUED: 03/01/99	DEPARTMENT OF PUBLIC UTILITIES STANDARD DETAIL	REVISED: 06/08/2014
DRAWN: EAM	TYPICAL 2-INCH HDPE WATER SERVICE FOR LONG SINGLE/DUAL 5/8", 3/4" AND 1" METERS, AND ANY SINGLE 1-1/2" OR 2" METERS	DRAWING NO. W-09
APPROVED: XXX		

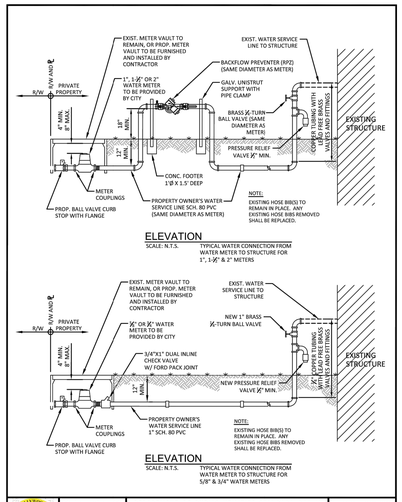

ISSUED: 03/01/99	DEPARTMENT OF PUBLIC UTILITIES STANDARD DETAIL	REVISED: 11/08/2014
DRAWN: EAM	TYPICAL WATER SERVICE FROM METER TO STRUCTURE FOR 5/8" THROUGH 2" METERS	DRAWING NO. W-10
APPROVED: XXX		

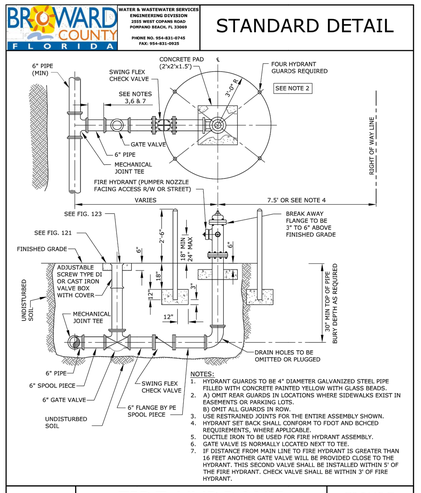

DWG NO.8	FIRE HYDRANT INSTALLATION	FIGURE 231
REVISED		

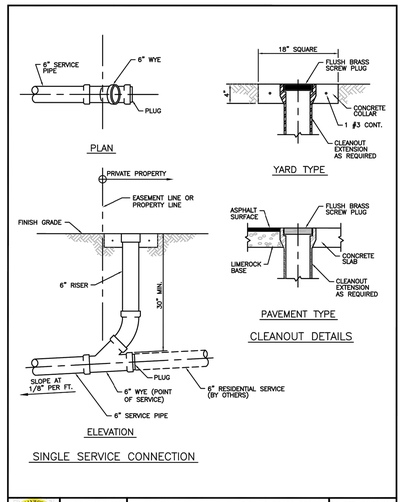

ISSUED: 03/01/99	DEPARTMENT OF PUBLIC UTILITIES STANDARD DETAIL	REVISED: 06/08/2014
DRAWN: EAM	SEWER SERVICE CONNECTION AND CLEANOUT AT PROPERTY LINE	DRAWING NO. S-12
APPROVED: XXX		

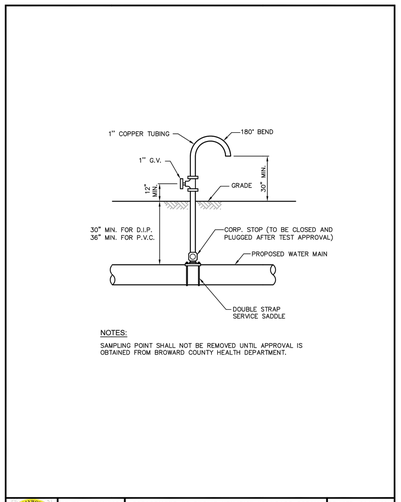

ISSUED: 03/01/99	DEPARTMENT OF PUBLIC UTILITIES STANDARD DETAIL	REVISED: 06/08/2014
DRAWN: EAM	SAMPLING POINT DETAIL	DRAWING NO. W-16
APPROVED: XXX		

DATE	DESCRIPTION	NO.
10/08/2018	PRELIMINARY TAC MEETING	
11/19/2018	FINAL TAC MEETING	

DETANCOURT & ASSOCIATES, INC. PROFESSIONAL ENGINEERING — LICENSE No. 83361 — STATE OF FLORIDA — November 5, 2018 — FLORIDA BUSINESS LICENSE No. 27325

THOMAS ENGINEERING GROUP
6300 NW 31ST AVE.
FORT LAUDERDALE, 33309
P.: (954) 202-7070
F.: (954) 202-7070
www.ThomasEngineeringGroup.com

THESE PLANS ARE SUBJECT TO FEDERAL COPYRIGHT LAWS: ANY USE OF SAME WITHOUT THE PERMISSION OF RACETRAC PETROLEUM, INC. IS PROHIBITED.

RaceTrac

RACETRAC PETROLEUM, INC.
GRIFFIN ROAD & SW 40TH AVENUE
HOLLYWOOD, BROWARD COUNTY
FLORIDA 33312

UTILITY DETAILS

RACETRAC MARKET

3990 GRIFFIN ROAD
Hollywood, Florida 33312

DATE	09/17/2018
SCALE	
DRAWN-BY	AG
DRAWING NAME:	
C6.2	1
SHEET NO.	VERSION

TESTING AND DISINFECTION NOTES:

1. NO CONNECTIONS TO THE EXISTING LINES SHALL BE MADE UNTIL THE PRESSURE AND BACTERIOLOGICAL TESTS HAVE BEEN PERFORMED ON THE PROPOSED WATER MAINS AND THE SYSTEM HAS BEEN APPROVED BY THE CITY OF HOLLYWOOD AND THE BROWARD COUNTY HEALTH DEPARTMENT.
2. THE PRESSURE TEST SHALL BE PERFORMED FOR 2 HOURS AT A CONSTANT PRESSURE OF 150 PSI AND IN ACCORDANCE WITH RULE 62-555.330 (FAC) C600 AWWA LATEST REVISION, EXCEPT AS OTHERWISE SPECIFIED HEREIN AND IN SPECIFICATION SECTION 15995, "PIPELINE TESTING AND DISINFECTION". PRESSURE TEST SHALL BE WITNESSED BY THE CITY OF HOLLYWOOD. THE ALLOWABLE LEAKAGE SHALL BE LESS THAN THE NUMBER OF GALLONS PER HOUR AS DETERMINED BY THE FORMULA:

$$L = \frac{S \times D \times \sqrt{P}}{148{,}000}$$

L = THE ALLOWABLE LEAKAGE IN GALLONS PER HOUR.
S = THE LENGTH OF PIPE BEING TESTED.
D = THE NOMINAL DIAMETER OF THE PIPE BEING TESTED.
P = THE AVERAGE TEST PRESSURE IN POUNDS PER SQUARE INCH.

3. THE COMPLETE LENGTH OF THE PROPOSED WATER MAIN SHALL BE TESTED, IN LENGTHS NOT TO EXCEED 2,000 FEET PER TEST.
4. PROPOSED WATER MAINS SHALL BE DISINFECTED IN ACCORDANCE WITH THE LATEST EDITION OF ANSI/AWWA STANDARD C651 AND BACTERIOLOGICAL TESTED FOR TWO CONSECUTIVE DAYS IN ACCORDANCE WITH SPECIFICATION SECTION 15995, "PIPELINE TESTING AND DISINFECTION".
5. BACTERIOLOGICAL TESTS SHALL BE REQUESTED AND PAID FOR BY THE CONTRACTOR.
6. THE CONTRACTOR SHALL DIRECTLY HIRE A TESTING LABORATORY CERTIFIED BY THE FLORIDA DEPARTMENT OF HEALTH IN ORDER TO COLLECT AND TEST WATER SAMPLES FROM THE WATER DISTRIBUTION SYSTEM TO BE PLACED INTO SERVICE. SAMPLE COLLECTION AND BACTERIOLOGICAL ANALYSES SHALL BE PERFORMED IN ACCORDANCE WITH RULES 62-555.315(6), 62-555.340 AND 62-555.330 (FAC), AS WELL AS ALL REQUIREMENTS OF THE BROWARD COUNTY HEALTH DEPARTMENT PERMIT.
7. THE WATER DISTRIBUTION SYSTEM SHALL NOT BE CONSIDERED COMPLETE AND READY FOR FINAL INSPECTION UNTIL SUCCESSFUL TEST RESULTS ARE OBTAINED FOR ALL TESTS DESCRIBED ABOVE.

ISSUED: 03/01/994	DEPARTMENT OF PUBLIC UTILITIES STANDARD DETAIL		REVISED: 06/08/2014
DRAWN: EAM	TESTING AND DISINFECTION NOTES		DRAWING NO.
APPROVED: XXX			W-14

SEWER NOTES:

1. THE MINIMUM DEPTH OF COVER OVER D.I.P. SANITARY SEWER GRAVITY OR FORCE MAINS IS 30". THE MINIMUM DEPTH OF COVER OVER PVC SANITARY SEWER OR FORCE MAINS IS 36".
2. ALL CONNECTIONS TO EXISTING MAINS SHALL BE THE RESPONSIBILITY OF THE CONTRACTOR.
3. LEAKAGE TESTS AND ALIGNMENT (LAMPING) TESTS SHALL BE PERFORMED ON ALL NEW SEWER LINES UP TO THE CONNECTION POINT WITH THE EXISTING SEWER SYSTEM. THESE TESTS SHALL BE REQUESTED AND PAID FOR BY THE CONTRACTOR.
4. LAMPING TESTS SHALL BE PERFORMED ON GRAVITY SEWERS FROM MANHOLE TO MANHOLE UP TO AND INCLUDING THE POINT OF CONNECTION TO THE EXISTING SEWER SYSTEM.
5. LEAKAGE TESTS SHALL BE PERFORMED ON ALL SEGMENTS OF A GRAVITY SEWER SYSTEM, INCLUDING SERVICE LATERALS AND MANHOLES, FOR A CONTINUOUS PERIOD OF NO LESS THAN 2 HOURS. AT THE END OF THE TEST, THE TOTAL MEASURED LEAKAGE SHALL NOT EXCEED 100 GALLONS PER INCH OF PIPE DIAMETER PER MILE PER DAY FOR ANY SECTION OF THE SYSTEM, WITH ZERO ALLOWABLE LEAKAGE FOR LATERALS AND MANHOLES. AN EXFILTRATION OR INFILTRATION TEST SHALL BE PERFORMED WITH A MINIMUM POSITIVE HEAD OF 2 FEET ON THE SECTION BEING TESTED.
6. FORCE MAINS SHALL BE PRESSURE-TESTED IN ACCORDANCE WITH RULE 62-555.330 (FAC). THE PRESSURE TEST SHALL CONSIST OF HOLDING A TEST PRESSURE OF 150 PSI ON THE PIPELINE FOR A CONTINUOUS PERIOD OF 2 HOURS THE MAXIMUM ALLOWABLE LEAKAGE SHALL BE DETERMINED BY THE FOLLOWING FORMULA:

$$L = \frac{S \times D \times \sqrt{P}}{148{,}000}$$

WHERE:
L = ALLOWABLE LEAKAGE FOR SYSTEM IN GALLONS PER HOUR
D = PIPE DIAMETER IN INCHES
S = LENGTH OF LINES IN LINEAL FEET
P = AVERAGE TEST PRESSURE IN PSI

7. CONTRACTOR SHALL BE RESPONSIBLE FOR IDENTYFYING CONFLICTS WITH FORCE MAINS PLACED AT MINIMUM COVER. IN CASE OF CONFLICT, FORCE MAIN SHALL BE LOWERED TO PASS UNDER CONFLICTS WITH 12" MINIMUM SEPARATION FROM WATER MAINS AND 6" MINIMUM SEPARATION FROM OTHER UTILITIES. NO ADDITIONAL PAYMENT SHALL BE DUE TO CONTRACTOR FOR LOWERING THE MAIN OR THE ADDITIONAL FITTINGS USED THEREON.
8. WHENEVER IT IS NECESSARY, IN THE INTEREST OF SAFETY, TO BRACE THE SIDES OF A TRENCH, THE CONTRACTOR SHALL FURNISH, PUT IN PLACE AND MAINTAIN SUCH SHEETING OR BRACING AS MAY BE NECESSARY TO SUPPORT THE SIDES OF THE EXCAVATION TO ENSURE PERSONNEL SAFETY, AND TO PREVENT MOVEMENT WHICH CAN IN ANY WAY DAMAGE THE WORK OR ENDANGER ADJACENT STRUCTURES. THE CONTRACTOR SHALL BE SOLELY RESPONSIBLE FOR THE SEQUENCE, METHODS AND MEANS OF CONSTRUCTION, AND FOR THE IMPLEMENTATION OF ALL OSHA AND OTHER SAFETY REQUIREMENTS.

ISSUED: 03/01/994	DEPARTMENT OF PUBLIC UTILITIES STANDARD DETAIL		REVISED: 06/08/2014
DRAWN: EAM	SANITARY SEWER MAIN CONSTRUCTION NOTES		DRAWING NO.
APPROVED: XXX			S-01

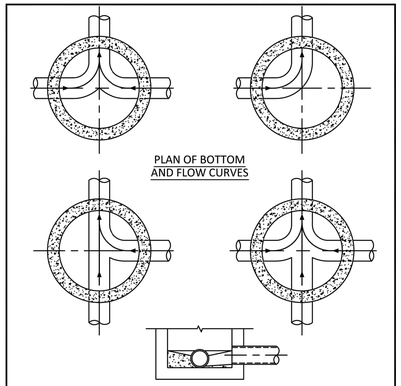

NOTES:

1. INVERT CHANNELS TO BE CONSTRUCTED FOR SMOOTH FLOW WITH NO OBSTRUCTIONS.
2. SPILLWAYS SHALL BE CONSTRUCTED BETWEEN PIPES WITH DIFFERENT INVERT ELEVATIONS PROVIDING SMOOTH FLOWS.
3. CHANNELS FOR FUTURE CONNECTIONS (STUBS) SHALL BE CONSTRUCTED FILLED WITH SAND & COVERED WITH 1" OF MORTAR.
4. WHEN FLOW LINE DEFLECTS MORE THAN 45°, A DROP OF 0.10' IS REQUIRED.

ISSUED: 03/01/994	DEPARTMENT OF PUBLIC UTILITIES STANDARD DETAIL		REVISED: 06/08/2014
DRAWN: EAM	MANHOLE FLOW PATTERNS		DRAWING NO.
APPROVED: XXX			S-02

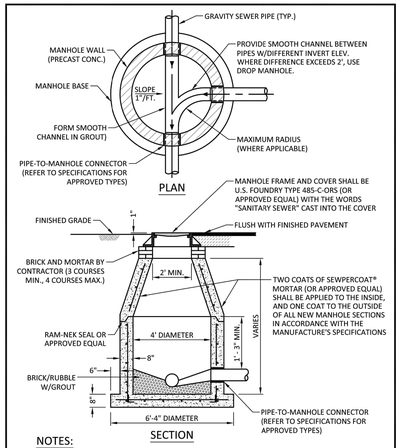

NOTES:

1. SHOP DRAWINGS SIGNED AND SEALED BY A FLORIDA REGISTERED PROFESSIONAL ENGINEER SHOWING ALL DIMENSIONS AND CALCULATIONS, INCLUDING CONCRETE REINFORCEMENT AND BUOYANCY, SHALL BE SUBMITTED TO THE CITY PRIOR TO INSTALLATION.
2. THE BOTTOM SLAB SHALL BE CAST MONOLITHICALLY WITH THE LOWER WALL SECTION.

ISSUED: 03/01/994	DEPARTMENT OF PUBLIC UTILITIES STANDARD DETAIL		REVISED: 06/08/2014
DRAWN: EAM	STANDARD PRECAST MANHOLE		DRAWING NO.
APPROVED: XXX			S-03

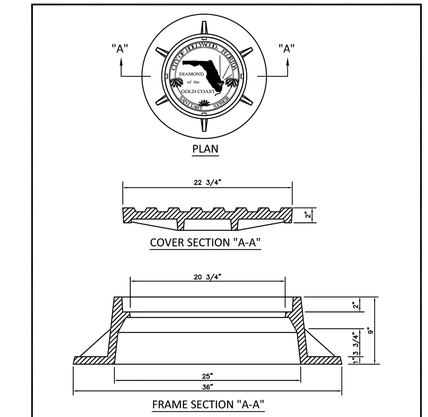

NOTES:

1. LETTERS ON COVER TO BE 3/8" HIGH, 1/4" TO 5/16" THICK AND FLUSH WITH TOP OF COVER.
2. ALL BEARING SURFACES TO BE MACHINED.
3. MINIMUM WEIGHTS: COVER - 160 LBS., TOTAL - 400 LBS.
4. MANHOLE FRAME AND COVER SHALL BE U.S. FOUNDRY 485-C-ORS TYPE EL, WITH THE WORDS "SANITARY SEWER" CAST INTO THE COVER.

ISSUED: 03/01/994	DEPARTMENT OF PUBLIC UTILITIES STANDARD DETAIL		REVISED: 06/08/2014
DRAWN: EAM	MANHOLE FRAME AND COVER		DRAWING NO.
APPROVED: XXX			S-06.1

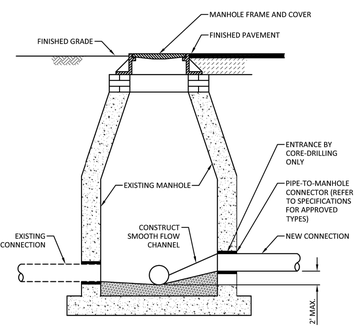

ISSUED: 03/01/994	DEPARTMENT OF PUBLIC UTILITIES STANDARD DETAIL		REVISED: 06/08/2014
DRAWN: EAM	NEW CONNECTION TO EXISTING MANHOLE		DRAWING NO.
APPROVED: XXX			S-07

DATE	NO.
10/08/2018	
11/19/2018	

PRELIMINARY TAC MEETING
FINAL TAC MEETING

THOMAS ENGINEERING GROUP
6300 NW 31ST AVE.
FORT LAUDERDALE, FL 33309
P.: (954) 202-7070
F.: (954) 202-7070
www.Thomasengineeringgroup.com

THESE PLANS ARE SUBJECT TO FEDERAL COPYRIGHT LAWS: ANY USE OF SAME WITHOUT THE EXPRESSED WRITTEN PERMISSION OF RACETRAC PETROLEUM, INC. IS PROHIBITED.

RACETRAC PETROLEUM, INC.
GRIFFIN ROAD & SW 40TH AVENUE
HOLLYWOOD, BROWARD COUNTY
FLORIDA 33312

UTILITY DETAILS

RACETRAC MARKET

3990 GRIFFIN ROAD
Hollywood, Florida 33312

DATE	09/17/2018
SCALE	
DRAWN-BY	AG
DRAWING NAME:	
C6.3	1
SHEET NO.	VERSION

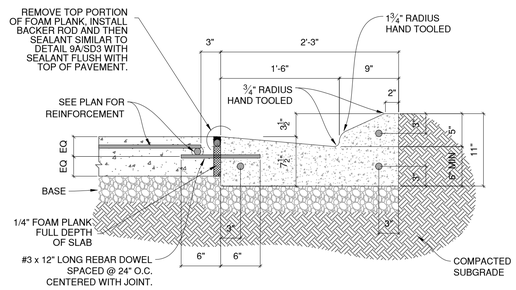

CATCH CURB DETAIL @ CONCRETE SLAB

1 / SD1 — N.T.S.

1. CURB CONSTRUCTION AND CONTRACTION JOINTS LOCATIONS NOT TO EXCEED 10 FEET. SAWCUT CONTRACTION JOINTS 1/8" WIDE BY 1-1/2" DEEP AS SOON AS CONCRETE HAS HARDENED SUFFICIENTLY TO PREVENT RAVELING OR DISLODGING OF AGGREGATES. SAWCUT CONSTRUCTION JOINTS 1/8" WIDE BY 1" DEEP. FILL JOINTS WITH PAVEMENT SEALANT PER DETAIL 9A/SD1. VERIFY JOINT LOCATIONS WITH THE OWNER'S REPRESENTATIVE.

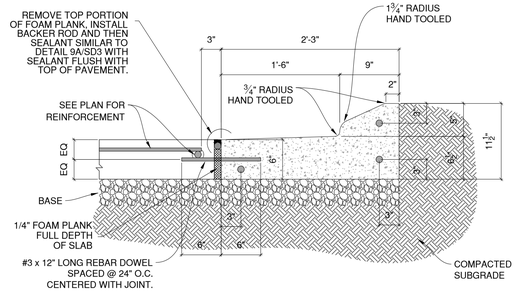

SHED CURB DETAIL @ CONCRETE SLAB

2 / SD1 — N.T.S.

1. SEE NOTE ONE ON DETAIL 1/SD1 FOR CONSTRUCTION AND CONTRACTION JOINTS INFORMATION.
2. USE DETAIL WHEN ADJACENT PAVEMENT SLOPES AWAY FROM CURBING.

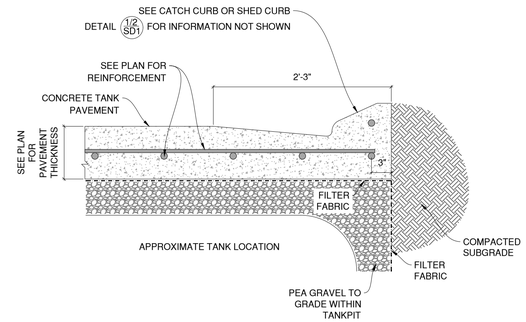

TANK AREA CURB DETAIL

3 / SD1 — N.T.S.

1. SEE NOTE ONE ON DETAIL 1/SD1 FOR CONSTRUCTION AND CONTRACTION JOINTS INFORMATION.
2. THIS CURB TYPE IS TO BE USED ALONG THE CURB LINE ADJACENT TO THE TANK PAVEMENT. SEE PLAN FOR LOCATION.

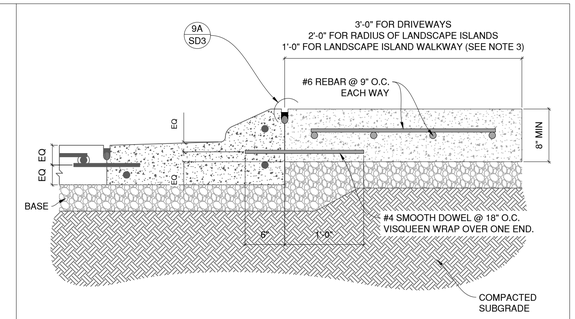

CONCRETE BACKING FOR ON-SITE CURB

4 / SD1 — N.T.S.

1. SEE NOTE ONE ON DETAIL 1/SD1 FOR CONSTRUCTION AND CONTRACTION JOINTS INFORMATION.
2. THREE (3) FOOT BACKING IS TO BE USED ALONG THE RADIUS OF DRIVEWAYS. TWO (2) FOOT BACKING IS TO BE USED ALONG THE RADIUS OF LANDSCAPE ISLANDS WITHIN HIGH TRAFFIC AREAS. ONE (1) FOOT BACKING IS TO BE USED AS A PEDESTRIAN WALKWAY WITHIN LANDSCAPE ISLANDS.
3. IF LANDSCAPE ISLANDS HAVE TO BE INCREASED, DUE TO THE ONE (1) FOOT BACKING, TO MEET SQUARE FOOTAGE REQUIREMENTS AND PARKING SPACES ARE LOST, ONE (1) FOOT BACKING WILL NOT BE USED IN THOSE AREAS.
4. SEE PLAN FOR LOCATIONS FOR CURB BACKING.

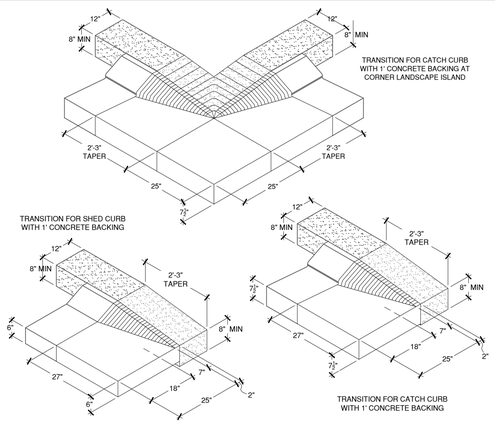

CURB TRANSITION DETAILS

5 / SD1 — N.T.S.

1. SEE SITE PLAN FOR EXACT LOCATIONS

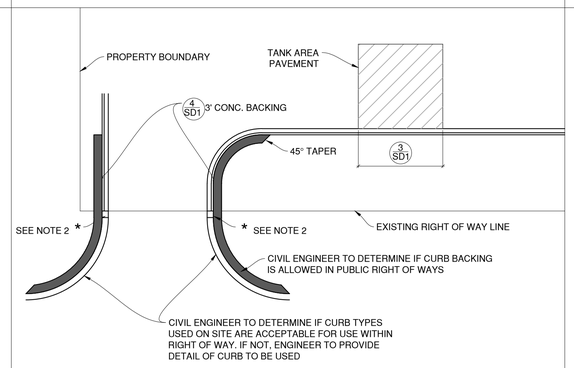

CURB LAYOUT PLAN VIEW

6 / SD1 — N.T.S.

1. REFER TO "SITE PLAN" FOR EXACT LOCATIONS OF THE DIFFERING CURB TYPES.
2. * = RACETRAC CONSTRUCTION PROJECT MANAGER TO COORDINATE WITH CONCRETE SUBCONTRACTOR TO DETERMINE BEST TRANSITION METHOD BETWEEN DIFFERING CURB TYPES.

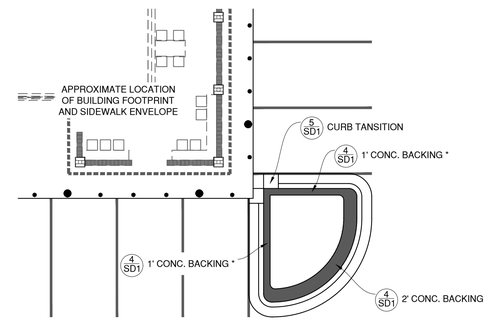

CONCRETE BACKING PLAN VIEW

7 / SD1 — N.T.S.

1. REFER TO "SITE PLAN" FOR EXACT LOCATIONS OF THE DIFFERING CURB TYPES.
2. * IF LANDSCAPE ISLANDS HAVE TO BE INCREASED, DUE TO THE ONE (1) FOOT BACKING, TO MEET SQUARE FOOTAGE REQUIREMENTS AND PARKING SPACES ARE LOST, ONE (1) FOOT BACKING WILL NOT BE USED IN THOSE AREAS. REFER TO SITE PLAN FOR EXACT LOCATIONS.

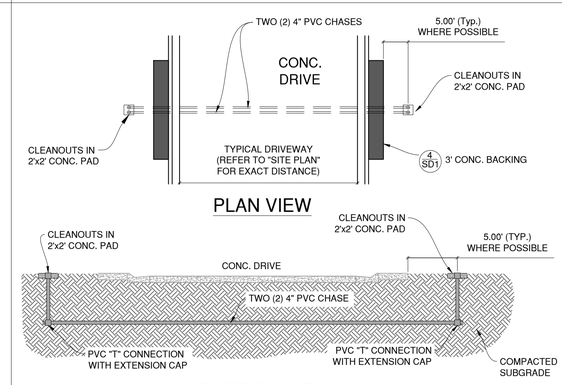

PVC CHASE DETAIL

8 / SD1 — N.T.S.

1. PVC CHASE TO BE PLACED UNDER ALL DRIVEWAYS. (REFER TO "SITE PLAN" FOR EXACT LOCATIONS)
2. CHASES ARE NOT TO BE USED FOR IRRIGATION INSTALLED WITH THIS DEVELOPMENT. IRRIGATION SLEEVES WILL BE SEPARATE. REFER TO UTILITY PLAN AND SHEET "L-2.1" FOR IRRIGATION SLEEVE LOCATIONS.

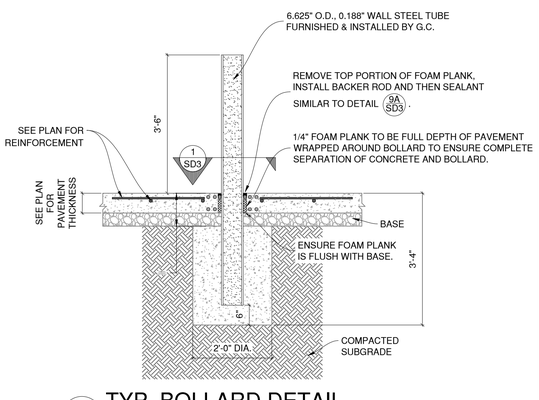

TYP. BOLLARD DETAIL

9 / SD1 — N.T.S.

1. BUMPER POSTS TO BE PLUMB AND ALIGNED IN A STRAIGHT LINE AND FILLED WITH CONCRETE.
2. TOPS TO BE GROUND SMOOTH W/ SQUARE EDGE, THE PRIMED WITH "END RUST" BY DURO AND PAINTED WITH INDUSTRIAL OIL BASED ENAMEL. COLOR TO MATCH DECORATIVE LIGHT POLES.
3. REFER TO PAVING PLAN FOR EXACT CONCRETE THICKNESS.
4. REFER TO PAVING PLAN FOR CONCRETE COMPRESSIVE STRENGTH & SUBGRADE COMPACTION REQUIREMENTS.

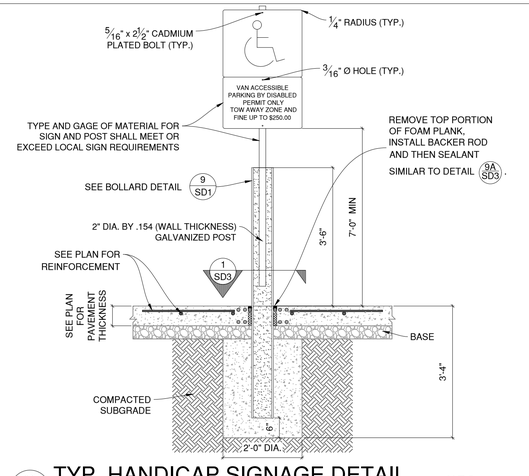

TYP. HANDICAP SIGNAGE DETAIL

10 / SD1 — N.T.S.

1. REFER TO LOCAL JURISDICTION REQUIREMENTS FOR SPECIFIC DETAILS.
2. CONTRACTOR SHALL VERIFY ALL THE REQUIRED INFORMATION NECESSARY AT EACH SIGN WITH LOCAL AUTHORITIES PRIOR TO PURCHASING.

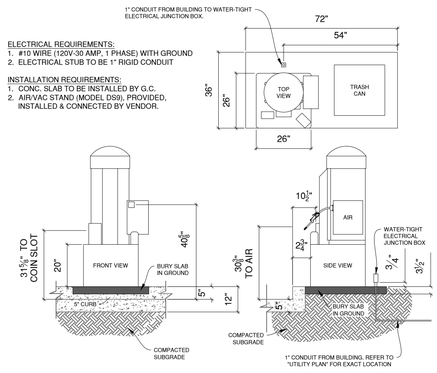

AIR/VAC SERVICE DETAIL

11 / SD1 — N.T.S.

1. SECURE VAULT TO PAD W/ TWO (2) 29-00450 ANGLE BRACKETS AND FOUR (4) ½"Ø x 4" SIMPSON TITAN HD SCREWTYPE ANCHORS (TYP.)
2. REFER TO PAVING PLAN FOR EXACT CONCRETE THICKNESS.
3. REFER TO PAVING PLAN FOR CONCRETE COMPRESSIVE STRENGTH & SUBGRADE COMPACTION REQUIREMENTS.

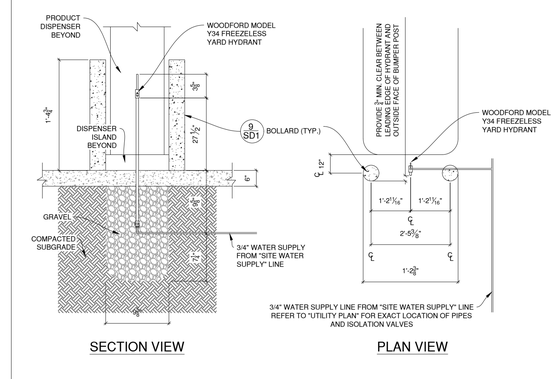

YARD HYDRANT DETAIL

12 / SD1 — N.T.S.

1. SEE "SITE PLAN" FOR EXACT LOCATIONS.
2. REFER TO PAVING PLAN FOR EXACT CONCRETE THICKNESS.
3. REFER TO PAVING PLAN FOR CONCRETE COMPRESSIVE STRENGTH & SUBGRADE COMPACTION REQUIREMENTS.

DATE	NO.
10/08/2018	
11/19/2018	

PRELIMINARY TAC MEETING
FINAL TAC MEETING

REVA A. BELANCOURT — LICENSE No. 83361 — STATE OF FLORIDA — PROFESSIONAL ENGINEER — November 5, 2018
FLORIDA BUSINESS LICENSE No. 27323

THOMAS ENGINEERING SOLUTIONS
6300 NW 31ST AVE.
FORT LAUDERDALE, FL 33309
PH: (954) 202-7000
FX: (954) 202-7070
www.ThomasEngineeringSolutions.com

THESE PLANS ARE SUBJECT TO FEDERAL COPYRIGHT LAWS. ANY USE OF SAME WITHOUT THE EXPRESSED WRITTEN PERMISSION OF RACETRAC PETROLEUM, INC. IS PROHIBITED.

RACETRAC PETROLEUM, INC.
GRIFFIN ROAD & SW 40TH AVENUE
HOLLYWOOD, BROWARD COUNTY
FLORIDA 33312

RACETRAC STANDARD DETAILS
RACETRAC MARKET
3990 GRIFFIN ROAD
Hollywood, Florida 33312

DATE	09/17/2018
SCALE	
DRAWN-BY	AG
DRAWING NAME:	
SD1 (SHEET NO.)	1 (VERSION)

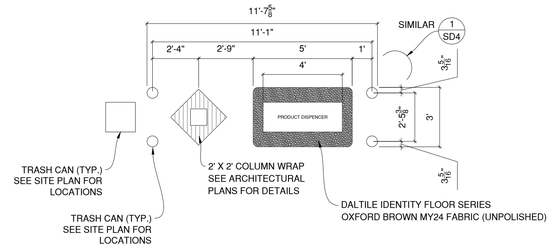

1 SD2 PUMP ISLAND DETAIL N.T.S.

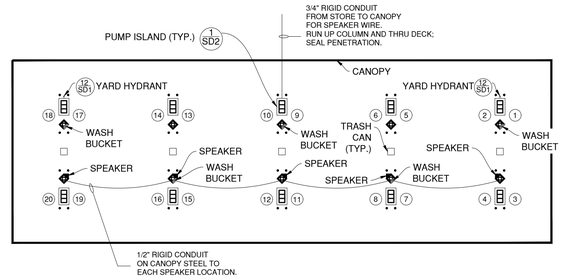

2 SD2 CANOPY ACCESSORY LAYOUT DETAIL N.T.S.

1. DOUBLE ROW OF FIVE (5) SINGLE COLUMN MPD'S.
2. REFER TO CANOPY PLANS FOR CANOPY DIMENSIONS AND COLUMN LOCATIONS.

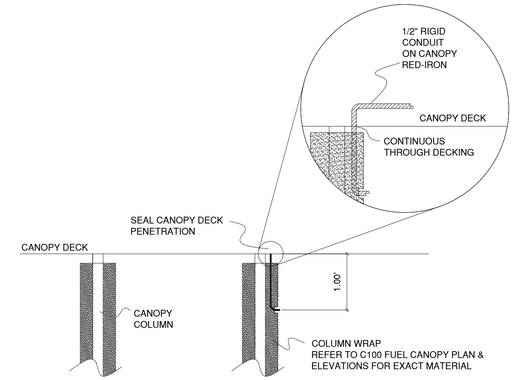

3 SD2 CONDUIT ATTACHMENT & PENETRATION DETAILS N.T.S.

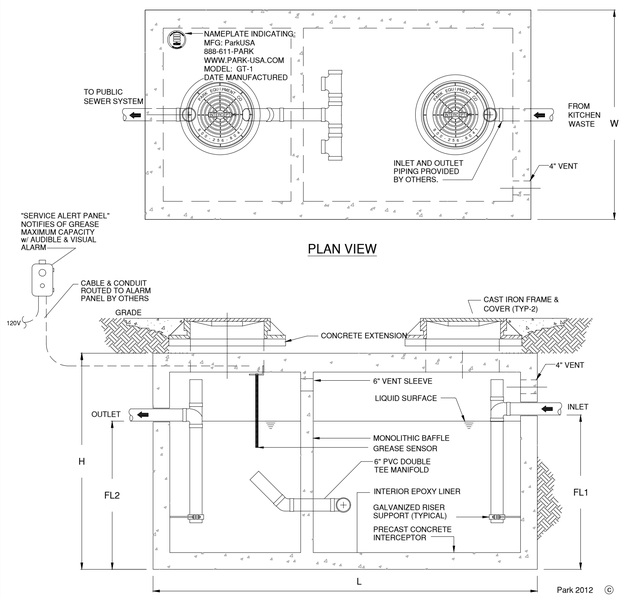

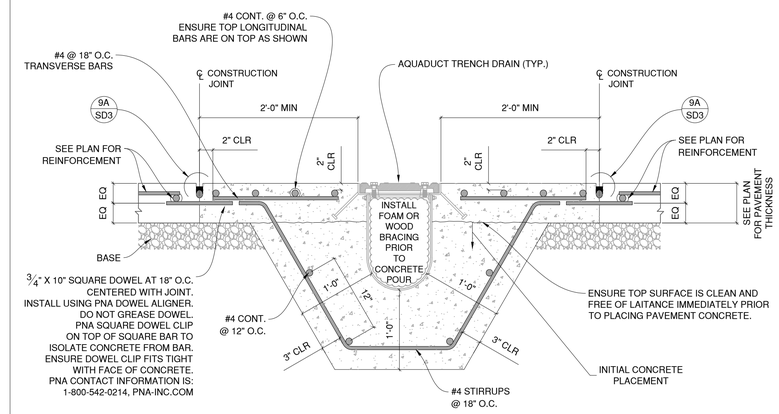

5 SD2 TYP. CONCRETE DETAIL @ CANOPY AQUADUCT TRENCH DRAIN N.T.S.

1. G.C. MUST READ INSTALLATION INSTRUCTIONS PRIOR TO INSTALLATION OF AQUADUCT TRENCH DRAIN.
2. REFER TO DETAIL (5/SD2) FOR BRACING RECOMMENDATIONS.
3. EACH TRENCH DRAIN IS INDIVIDUALLY DESIGNED AND SIZED BY AQUADUCT, INC. (REFER TO DESIGN SPECS FOR EXACT SIZING.)
4. SOME PROJECTS MAY HAVE MULTIPLE TRENCH DRAINS ON SITE. (REFER TO "GRADING PLAN" FOR EXACT LOCATIONS.)

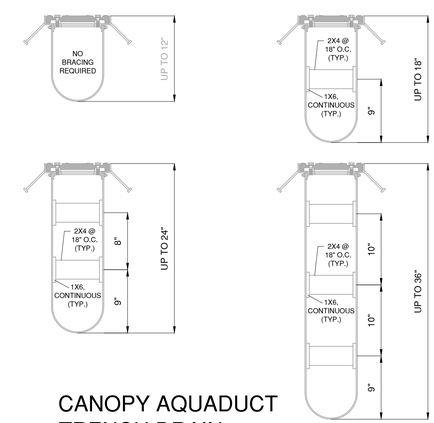

CANOPY AQUADUCT
TRENCH DRAIN
BRACING LAYOUT DETAILS N.T.S.

6 SD2

1. OVER 36" ADD AN ADDITIONAL LEVEL OF BRACING FOR EACH ADDITIONAL 12" OF DEPTH.

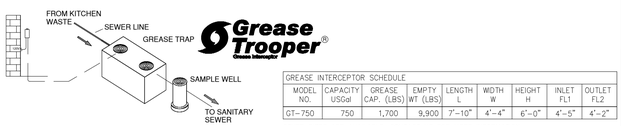

GREASE INTERCEPTOR SCHEDULE								
MODEL NO.	CAPACITY USGal	GREASE CAP. (LBS)	EMPTY WT (LBS)	LENGTH L	WIDTH W	HEIGHT H	INLET FL1	OUTLET FL2
GT-750	750	1,700	9,900	7'-10"	4'-4"	6'-0"	4'-5"	4'-2"

OTHER SIZES ARE AVAILABLE. CONTACT US FOR MORE INFORMATION

Typical applications include commercial and industrial food service kitchens where excessive grease may interfere with the proper drainage of the sewer system. The grease interceptor is generally buried below grade for gravity flow sewer systems. A sample well is utilized on the outlet side for sampling by the local water authority.

Specifications

CONCRETE : Class II concrete with design strength of 4500 PSI at 28 days. Unit is of monolithic construction at floor, first stage of well and baffle with sectional riser to required depth. (Monolithic baffle required, slide-in type is not acceptable)

REINFORCEMENT: Grade 60 reinforced with steel rebar conforming to ASTM A615 on required centers or equal.

C.I. CASTINGS: Manhole frames, covers or grates are manufactured of gray cast iron conforming to ASTM A48-76 Class 30. Manhole shall be nominal 24 inch diameter and be traffic duty.

Engineering Data

The grease interceptor is structurally & hydraulically engineered to conform to regional plumbing codes recommended in most cities. Consult with local authorities for specific application requirements.

Shop drawings shall include complete structural & buoyancy calculations certified by a licensed professional engineer.

Consult with Park Equipment Company for exact excavation dimensions & shipping information.

888.611.7275
www.park-usa.com
PARK USA
Design for Water

GREASE INTERCEPTOR SERIES GT 750 GALLON CAPACITY			
SCALE	NONE	DWG. NO. GT-1	REV. A
DATE	2012		

GREASE TRAP
(750 GALLON CAPACITY)
& SAMPLE WELL DETAILS
"OR APPROVED EQUAL" N.T.S.

4 SD2

1. ENGINEER OF RECORD APPROVAL REQUIRED FOR "APPROVED EQUAL"

NOTES:

1. LIGHT POLES TO BE AAL, PROVIDED BY RACETRAC AND TO BE INSTALLED BY GENERAL CONTRACTOR. SEE SITE PLAN FOR POLE LOCATIONS.
2. LIGHT FIXTURES TO BE AAL - SPECTRA SP2 AREA LIGHTING MODEL STR-Y4-2050 FCO-MOD (KB6-12LED)-DB-POST TOP MOUNT WITH A MAXIMUM EFFECTIVE PROJECTED AREA OF 0.63 S.F. (REFER TO "PHOTOMETRIC PLAN" FOR DETAILS). ONE LIGHT FIXTURE PER POLE.
3. WIND DESIGN CRITERIA BASED ON THE FOLLOWING:
   A. ASCE 7-10
   B. Vult=160 MPH WITH EXPOSURE C RISK CATEGORY II
   C. Vasd=130 MPH
   D. IMPORTANCE FACTOR I = 1.0
   E. DESIGN WIND PRESSURE = 37.5 PSF

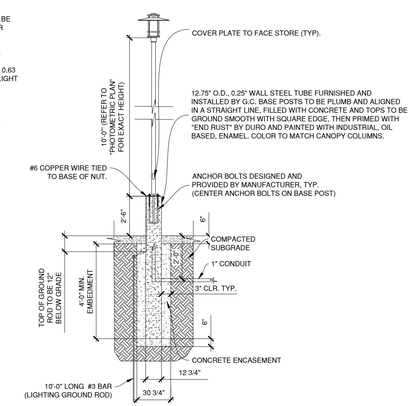

7 SD2 TYP. DECORATIVE LIGHTING SECTION 160 MPH WIND (Vult) N.T.S.

1. LIGHT POLES SHALL MEET 130 MPH WIND (Vasd); 160 MPH (Vult).
2. CONCRETE SHALL HAVE A 28 DAY COMPRESSIVE STRENGTH (F'c) OF 3,500 PSI FOR ALL LIGHT POLE FOOTINGS.
3. ALL REINFORCING STEEL SHALL BE NEW DOMESTIC DEFORMED BILLET STEEL CONFORMING TO ASTM A-615 GRADE 60.

NOTES:

1. LIGHT POLES TO BE SPALDING, PROVIDED BY RACETRAC AND TO BE INSTALLED BY GENERAL CONTRACTOR. SEE SITE PLAN FOR POLE LOCATIONS.
2. LIGHT FIXTURES TO BE CREE "EDGE" HIGH OUTPUT AREA LUMINAIRE WITH A MAXIMUM EFFECTIVE PROJECTED AREA OF 2.0 S.F. (REFER TO "PHOTOMETRIC PLAN" FOR DETAILS). ONE LIGHT FIXTURE PER POLE.
3. WIND DESIGN CRITERIA BASED ON THE FOLLOWING:
   A. ASCE 7-10
   B. Vult=160 MPH WITH EXPOSURE C RISK CATEGORY II
   C. Vasd=130 MPH
   D. IMPORTANCE FACTOR I = 1.0
   E. DESIGN WIND PRESSURE = 71.4 PSF

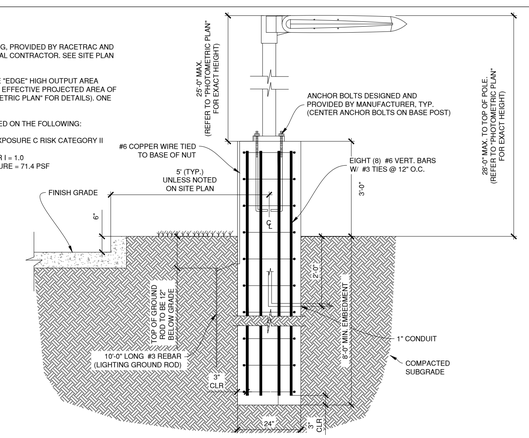

8 SD2 TYP. SITE LIGHTING SECTION 160 MPH WIND (Vult) N.T.S.

1. LIGHT POLES SHALL MEET 130 MPH WIND (Vasd); 160 MPH (Vult).
2. CONCRETE SHALL HAVE A 28 DAY COMPRESSIVE STRENGTH (F'c) OF 3,500 PSI FOR ALL LIGHT POLE FOOTINGS.
3. ALL REINFORCING STEEL SHALL BE NEW DOMESTIC DEFORMED BILLET STEEL CONFORMING TO ASTM A-615 GRADE 60.
4. CONCRETE ABOVE FINISH GRADE TO BE SMOOTH WITH RUBBED FINISH.
5. CONCRETE LIGHT POLE BASES TO BE PAINTED TO MATCH BOLLARD.

DATE	DATE
10/08/2018	PRELIMINARY TAC MEETING
11/19/2018	FINAL TAC MEETING

NO.

ALBERT C. BETANCOURT III
LICENSE No. 83361
November 5, 2018
STATE OF FLORIDA
PROFESSIONAL ENGINEER
FLORIDA BUSINESS AUTH. No. 27528

THOMAS ENGINEERING GROUP
6080 NW 31ST AVE
FORT LAUDERDALE, FL 33309
PH: (954) 202-7000
FAX: (954) 202-7070
www.ThomasEngineeringGroup.com

THESE PLANS ARE SUBJECT TO FEDERAL COPYRIGHT LAWS: ANY USE OF THE WITHOUT THE EXPRESSED WRITTEN PERMISSION OF RACETRAC PETROLEUM, INC. IS PROHIBITED.

RaceTrac
RACETRAC PETROLEUM, INC.
GRIFFIN ROAD & SW 40TH AVENUE
HOLLYWOOD, BROWARD COUNTY
FLORIDA 33312

RACETRAC STANDARD DETAILS
RACETRAC MARKET
3990 GRIFFIN ROAD
Hollywood, Florida 33312

DATE	09/17/2018
SCALE	
DRAWN-BY	AG
DRAWING NAME:	
SD2 (SHEET NO.)	1 (VERSION)

GENERAL CONCRETE PAVEMENT NOTES

1. REVIEW AND VERIFY ALL AS-BUILT CONDITIONS WHICH AFFECT NEW CONSTRUCTION PRIOR TO SUBMISSION OF SHOP DRAWINGS AND ANY FABRICATION.
2. INDUSTRY STANDARDS GOVERNING THIS WORK ARE OF THE LATEST ISSUE AT THE DATE OF THIS DRAWING RELEASE.
3. ENSURE STORAGE, HANDLING, PREPARATION, INSTALLATION, ETC. OF ALL MATERIALS ARE IN ACCORDANCE WITH MANUFACTURER'S / VENDOR'S PRINTED RECOMMENDATIONS AND INSTRUCTIONS.

PAVEMENT SUBGRADE AND BASE NOTES

1. ENSURE TESTING AGENCY VERIFIES THE SUBGRADE IS COMPACTED TO THE SPECIFIED MAXIMUM DRY DENSITY AS DETERMINED BY THE GEOTECHNICAL ENGINEER. RECOMPACT SOFT AREAS AS DIRECTED BY THE GEOTECHNICAL ENGINEER. TESTING AGENCY TO PROVIDE A LETTER REPORT TO THE OWNER'S REPRESENTATIVE STATING THAT THE SUBGRADE HAS BEEN PROPERTY COMPACTED.
2. ENSURE TESTING AGENCY EVALUATES THE SUBGRADE BY PROOF-ROLLING. PROOF-ROLLING TO BE DONE BY A FULLY LOADED TANDEM-AXLE DUMP TRUCK OR OTHER EQUIVALENT LY WHEELED VEHICLE ACCEPTABLE TO THE TESTING AGENCY. REPAIR SOFT AREAS THAT DEPRESS DEEPER THAN 1/2 IN. AS DIRECTED BY THE TESTING AGENCY. TESTING AGENCY TO PROVIDE A LETTER REPORT TO THE OWNER'S REPRESENTATIVE STATING THE SUBGRADE HAS BEEN PROOF-ROLLED AND IS ACCEPTABLE. ***NOTE- DO NOT PROOF-ROLL ON TOP OF OR WITHIN 5 FT. FROM THE EDGE OF THE UNDERGROUND STORAGE TANK LOCATIONS.***
3. AGGREGATE BASE MATERIAL:
   A. COARSE AGGREGATE BASE: CRUSHER RUN WITH ROCK FINES. USE ASTM D 448, NO. 467, 57 OR 67 BLEND ONLY IF NOTED OR ALLOWED.
   B. FINE AGGREGATE BASE: CLEAN SCREENINGS ASTM D 448, NO. 10 WITH 6% TO 12% PASSING NO. 200 SIEVE.
4. AGGREGATE BASE MATERIAL INSTALLATION
   A. COMPACT COARSE AGGREGATE BASE TO FINAL THICKNESS SHOWN IN LAYERS NOT EXCEEDING 6 INCHES, WITH MINIMUM OF 2 PASSES PER LAYER WITH A VIBRATORY COMPACTOR.
   B. COMPACT BASE TO THE SPECIFIED MAXIMUM DRY DENSITY AS DETERMINED BY THE GEOTECHNICAL ENGINEER.
   C. CHOKE-OFF TOP SURFACE OF COARSE AGGREGATE BASE WITH FINE AGGREGATE BASE MATERIAL DUE TO THE FOLLOWING:
      1. AS REQUIRED TO MEET FINE GRADE ELEVATION TOLERANCES SPECIFIED.
      2. WHERE COARSE AGGREGATE BASE MATERIAL DOES NOT HAVE SUFFICIENT FINE PARTICLES TO PRODUCE A SURFACE THAT IS FREE OF EXPOSED AGGREGATE OR SURFACE VOIDS IMMEDIATELY PRIOR TO PAVEMENT INSTALLATION.
   D. COMPACT FINE AGGREGATE BASE CHOKE-OFF LAYER WITH A MINIMUM OF 2 PASSES WITH A VIBRATORY COMPACTOR.
   E. TOP SURFACE OF BASE MATERIAL TO BE DRY, SMOOTH, FLAT, DENSE SURFACE IMMEDIATELY BEFORE PLACING CONCRETE.
5. ENSURE TESTING AGENCY VERIFIES AGGREGATE BASE IS COMPACTED TO THE SPECIFIED MAXIMUM DRY DENSITY AS DETERMINED BY THE GEOTECHNICAL ENGINEER IMMEDIATELY PRIOR TO PLACING PAVEMENT. TESTING AGENCY TO PROVIDE LETTER REPORT TO OWNER'S REPRESENTATIVE STATING THE BASE IS ACCEPTABLE.
6. NOTIFY THE OWNER'S REPRESENTATIVE IMMEDIATELY IF UNUSUAL SOIL CONDITIONS ARE FOUND.
7. PROTECT EXISTING STRUCTURES, UTILITIES, PROPERTY, ETC. RESTORE ALL ITEMS DAMAGED, AS REQUIRED BY OWNER, AT NO COST TO OWNER OR WITHOUT EXTENSION OF CONTRACT TIME.
8. DO NOT ALLOW STORED EXCAVATION MATERIAL TO DISRUPT PROPER DRAINAGE OF AREA, DAMAGE TO SURROUNDING AREAS, OR STAIN ADJACENT CONCRETE.
9. DISPOSE OF EXCAVATED MATERIAL AS REQUIRED BY OWNER'S REPRESENTATIVE.

CONCRETE PAVEMENT NOTES

1. CONFORM TO ACI 318 AND 117 FOR THE DESIGN AND PLACEMENT OF CONCRETE, REINFORCING, AND RELATED ITEMS.
2. CONFORM TO ACI 306.1 FOR COLD WEATHER CONCRETING AND ACI 305R WHEN ANY COMBINATION OF HIGH TEMPERATURE, LOW RELATIVE HUMIDITY, AND WIND VELOCITY TEND TO IMPAIR THE QUALITY OF THE CONCRETE. REJECT CONCRETE IF ITS TEMPERATURE AT TIME OF PLACEMENT IS 90 DEG. FAHRENHEIT (F) OR ABOVE. PROTECT SURFACES OF EXPOSED CONCRETE FROM PRECIPITATION DAMAGE UNTIL ADEQUATE STRENGTH IS GAINED TO PREVENT DAMAGE.
3. CONFORM TO ACI 302.1R, 304R, 308, 309R AND 347R FOR CONCRETE, FORM WORK, CURING, AND RELATED ITEMS. CONFORM TO CRSI MANUAL OF STANDARD PRACTICE AND CRSI PLACING REINFORCING BARS FOR PLACING REINFORCING.
4. THE GEOTECHNICAL ENGINEERING REPORT INDICATES THAT THE SOILS ON-SITE HAVE A XXXXXXXXX SULFATE EXPOSURE. WHERE IMPORTED FILL OR BASE MATERIALS ARE IN CONTACT WITH CONCRETE, THE SULFATE CONTENT AND EXPOSURE OF THESE MATERIALS SHALL BE ACQUIRED BY TEST. SUBMIT ALL TEST RESULTS WITH CONCRETE MIX DESIGNS. FAILURE TO PROVIDE SUPPORTING TEST RESULTS FROM AN ACCREDITED TESTING LABORATORY WILL REQUIRE THE CONCRETE MIX TO BE PROPORTIONED FOR VERY SEVERE SULFATE EXPOSURE AT NO ADDITIONAL COST OR DELAY IN THE PROJECT SCHEDULE.
5. CONCRETE SHALL BE PROPORTIONED TO MEET THE PROJECT SPECIFICATIONS AND THE MINIMUM CRITERIA ESTABLISHED IN "TABLE A" (THIS SHEET) BASED ON THE SULFATE EXPOSURE FROM ANY ADJACENT SOILS OR FILL MATERIALS.
6. ADDITIONALLY, EXTERIOR CONCRETE EXPOSED TO FREEZING TEMPERATURES AND/OR SALT OR DEICING CHEMICALS SHALL HAVE AIR ENTRAINMENT AND THE CEMENT CONTENT APPROPRIATE FOR THE EXPECTED EXPOSURE. SEE SPECIFICATIONS FOR MORE INFORMATION.
7. CONCRETE TO MEET DURABILITY REQUIREMENTS OF ACI 301. FREEZING AND THAWING EXPOSURE CATEGORY TO BE [F0] [F1] [F2] [F3], SULFATE EXPOSURE CATEGORY TO BE [S0] [S1] [S2] [S3], AND CORROSION PROTECTION EXPOSURE CATEGORY TO BE [C0] [C1] [C2]. PROVIDE A MINIMUM CONCRETE COMPRESSIVE STRENGTH AT 28 DAYS OF [3500 psi] [4000 psi] [4500 psi] [5000 psi] WITH MAXIMUM WATER/CEMENTITIOUS RATIO OF [0.55] [0.50] [0.45] [0.40].
8. ENSURE REINFORCING BARS CONFORM TO ASTM A615 GRADE 60, DEFORMED.
9. PROVIDE CLASS B TENSION LAP SPLICES PER ACI 318, FOR CONCRETE STRENGTH AND BAR LOCATIONS NOTED.
10. MAINTAIN FULL THICKNESS FOR DEPRESSED OR SLOPED PAVEMENTS.
11. DO NOT ADD WATER OR PLAIN CEMENT TO ANY PAVEMENT SURFACE DURING FINISHING OPERATIONS.
12. PERFORM NO FINISHING OPERATION WHILE WATER IS PRESENT ON PAVEMENT SURFACE.
13. STRIKE OFF CONCRETE TO REQUIRED ELEVATIONS AND IMMEDIATELY START FINISHING/FLATTENING OPERATIONS. ENSURE FINISHING OPERATIONS ARE NO MORE THAN NECESSARY TO REMOVE IRREGULARITIES AND MEET SPECIFIED TOLERANCES. USE A HIGHWAY STRAIGHTEDGE 10 FT. WIDE MINIMUM, UNLESS OTHERWISE ALLOWED BY OWNER'S REPRESENTATIVE. IN ORDER TO CUT OFF HIGH SPOTS AND FILL IN LOW SPOTS. PERFORM FINISHING OPERATIONS AS NECESSARY TO ENSURE PAVEMENT WILL DRAIN WELL. UNIFORMLY FINISH SURFACE TO TEXTURE PREVIOUSLY APPROVED BY OWNER'S REPRESENTATIVE. DO NOT ALLOW SURFACE TO DRY DURING FINISHING OPERATIONS AND BEFORE CURING COMPOUND IS APPLIED. USE EVAPORATION RETARDANT AS NECESSARY TO PREVENT SURFACE DRYING AND PLASTIC SHRINKAGE CRACKS.
14. FOR TOLERANCES CONFORM TO ACI 117 AND ACI 347R, EXCEPT AS NOTED BELOW.
   A. PAVEMENT AGGREGATE BASE FINE GRADE: +0, -3/4 INCH.
   B. MINIMUM PAVEMENT THICKNESS TOLERANCE: -3/4 INCH.
   C. WHEN COMPUTING THE AVERAGE OF ALL SAMPLES, SAMPLES WITH A THICKNESS MORE THAN 3/4 IN. ABOVE THE SPECIFIED THICKNESS SHALL BE ASSUMED TO HAVE A THICKNESS 3/4 IN. MORE THAN THE SPECIFIED THICKNESS.
   C. AVERAGE PAVEMENT THICKNESS TOLERANCE: -0.
   D. THICKNESS SAMPLES ARE TO BE RANDOMLY LOCATED FROM EACH PAVEMENT PLACEMENT AND NOT EXCEED 1000 SQUARE FEET OF PAVEMENT SURFACE AREA.
15. START SAWING PAVEMENT CONTRACTION JOINTS USING A "SOFF-CUT" SAW, BLADES AND SKID PLATES AS SOON AS CONCRETE HAS HARDENED SUFFICIENTLY TO PREVENT RAVELING OR DISLODGING OF AGGREGATES. UNLESS RAVELING OR DISLODGING OCCURS, COMPLETE SAWING OF JOINTS WITHIN THE MAXIMUM ELAPSED TIME LIMIT NOTED BELOW, BUT PREFERABLY LESS. THE SPECIFIED TIME FOR ANY ONE LOCATION STARTS WHEN FINISHING OPERATIONS ARE COMPLETE FOR THAT LOCATION. THE SPECIFIED TEMPERATURE IS THE MAXIMUM AIR TEMPERATURE IN DEGREES FAHRENHEIT THAT OCCURS WITHIN THE SPECIFIED TIME LIMIT. THE ELAPSED TIME MAY NEED TO BE SHORTENED EVEN MORE IF DRY AND OR WINDY CONDITIONS ARE PRESENT. ENSURE JOINTS ARE CLEANED AFTER SAWING AND REMAIN CLEAN UNTIL SEALED.

MAX DEG F	MAX. ELAPSED HOURS
85 AND ABOVE	1
60 - 84	2
50 - 59	3
40 - 49	4

16. START CURING AS SOON AS CONCRETE SURFACE WILL NOT BE DAMAGED BY CURING OPERATIONS. CURE CONCRETE CONTINUOUSLY FOR A MINIMUM OF SEVEN CONSECUTIVE DAYS.
17. ENSURE PAVEMENT SURFACE IS PROTECTED FROM EQUIPMENT SCRAPES, IMPACT ABRASIONS, STAINS, ETC. REPAIR PAVEMENT SURFACE AS DIRECTED BY OWNER'S REPRESENTATIVE. VEHICLE AND EQUIPMENT TRAFFIC IS PROHIBITED UNTIL THE COMPLETION OF PAVEMENT CURING PERIOD. ENSURE VEHICLES AND EQUIPMENT ARE DIAPERED TO PREVENT OIL OR OTHER FLUID LEAKS FROM STAINING THE PAVEMENT.
18. REFER TO ARCHITECTURAL, MECHANICAL, ELECTRICAL, PROCESS, CIVIL AND VENDOR'S DRAWINGS FOR EMBEDDED ITEMS NOT SHOWN. COORDINATE AND PLACE ALL EMBEDDED ITEMS SHOWN ON THE DRAWINGS OR REQUIRED BY ALL TRADES.
19. PRE-CONSTRUCTION MEETINGS:
   A. ATTEND PRE-CONSTRUCTION MEETING TO BE SCHEDULED AT LEAST 7 DAYS BEFORE STARTING MAIN CONCRETE PAVEMENT.
   B. ATTENDANCE DESIGNATED BY THE OWNER'S REPRESENTATIVE AND THE FOLLOWING: STRUCTURAL SERVICES INC. REPRESENTATIVE, TESTING AGENCY, CONTRACTOR, CONCRETE SUPPLIER (INCLUDING QUALITY CONTROL PERSONNEL), AND SUBCONTRACTORS FOR SUBGRADE AND BASE PREPARATION, REINFORCEMENT, PUMPING OR OTHER MEANS OF CONVEYING, PLACEMENT, FINISHING, SAWING, FORMWORK, AND OTHER PERTINENT PORTIONS OF WORK.
   C. REPRESENTATIVES ARE TO BE PERSONNEL WHO ARE DIRECTLY INVOLVED IN PROJECT AND WHO HAVE AUTHORITY TO CONTROL WORK.

TABLE A (SEE CONCRETE PAVEMENT NOTE #5)

SULFATE EXPOSURE	WATER SOLUBLE SULFATE (SO4) IN WATER PPM	SULFATE (SO4) IN WATER PPM	PORTLAND CEMENT TYPE	MAXIMUM W/C RATIO	CONCRETE PAVEMENTS
NEGLIGIBLE	$0.00 \le SO_4 < 0.10$	$0 \le SO_4 < 150$	I	0.55	3500
MODERATE	$0.10 \le SO_4 < 0.10$	$150 \le SO_4 < 1500$	II	0.50	4000
SEVERE	$0.20 \le SO_4 \le 0.10$	$1500 \le SO_4 < 10,000$	V	0.45	4500
VERY SEVERE	$SO_4 > 2.00$	$SO_4 > 10,000$	V PLUS POZZOLAN	0.45	4500

NOTE TO CIVIL ENGINEERING COMPANY

TYPICALLY USE "MODERATE" EXPOSURE. CONTACT EPM IF EXPOSURE CLASS SHOULD BE CHANGED.

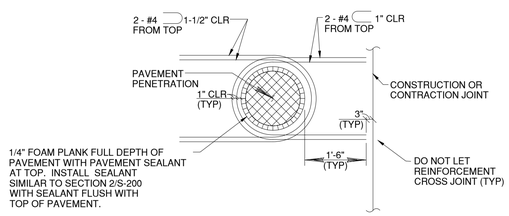

SLAB PENETRATIONS DETAIL 1 SD3
NTS

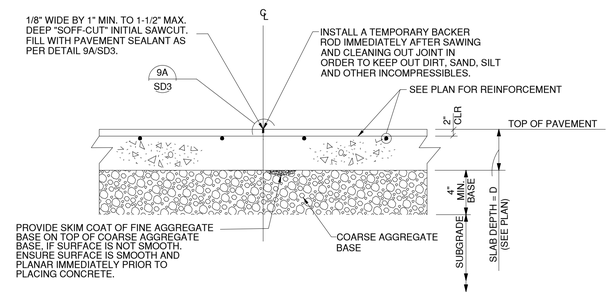

SLAB CONTRACTION JOINT SECTION 9 SD3
NTS

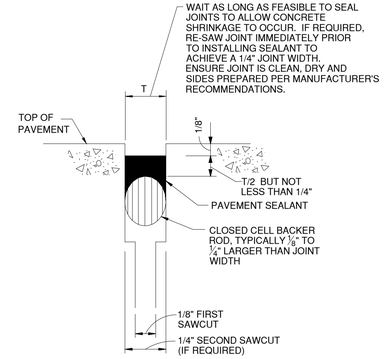

PCC JOINT DETAIL BLOW-UP 9A SD3
NTS

NOTES:
1. ENSURE JOINTS ARE CLEAN AND DRY PRIOR TO THE APPLICATION OF THE JOINT SEALANT.
2. INSTALL CLOSED CELL BACKER ROD AFTER JOINTS HAVE BEEN CLEANED AND DRIED IN ACCORDANCE WITH SEALANT MANUFACTURER'S REQUIREMENTS.
3. INSTALL BACKER ROD AT CONSISTENT AND UNIFORM DEPTH.
4. JOINT SEALANT APPLICATION SHALL BE IN STRICT COMPLIANCE WITH SEALANT MANUFACTURER'S REQUIREMENTS.

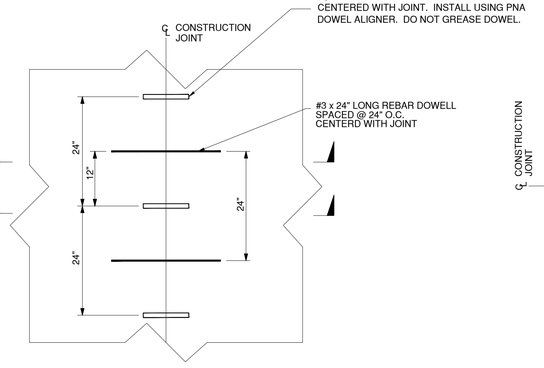

CONSTRUCTION JOINT PARTIAL PLAN DETAIL 10 SD3
NTS

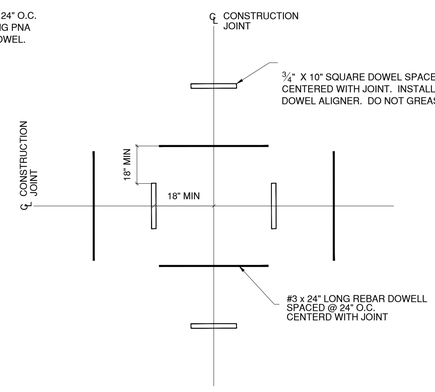

CONSTRUCTION JOINT INTERSECTION PARTIAL PLAN DETAIL 10C SD3
NTS

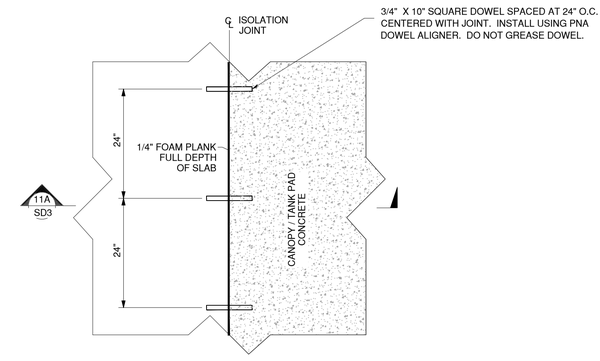

ISOLATION JOINT @ CANOPY / TANK PAD PARTIAL PLAN DETAIL 11 SD3
NTS

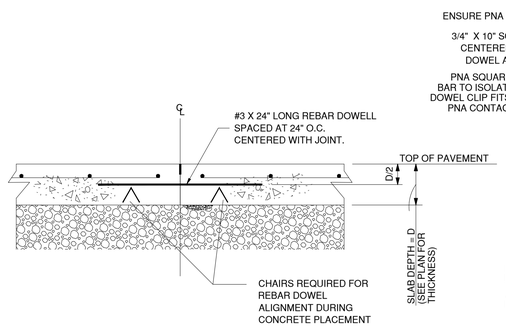

SLAB CONSTRUCTION JOINT SECTION 10A SD3
NTS

NOTES:

1. SEE CONTRACTION JOINT FOR INFO NOT SHOWN

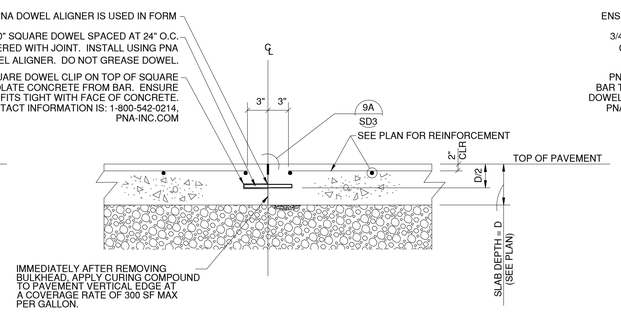

SLAB CONSTRUCTION JOINT SECTION 10B SD3
NTS

NOTES:

1. SEE CONTRACTION JOINT FOR INFO NOT SHOWN

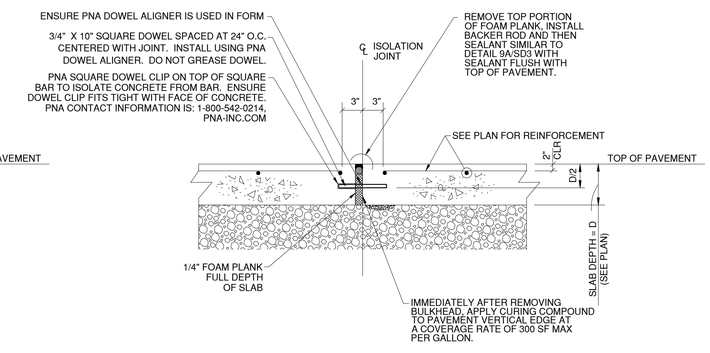

ISOLATION JOINT @ CANOPY SECTION 11A SD3
NTS

NOTES:

1. SEE CONTRACTION JOINT FOR INFO NOT SHOWN

DATE	DESCRIPTION
10/08/2018	PRELIMINARY TAC MEETING
11/19/2018	FINAL TAC MEETING

NO. DATE

A. BELANCOURT JR. LICENSE No. 83381 STATE OF FLORIDA PROFESSIONAL ENGINEER November 5, 2018
FLORIDA BUSINESS EB-0000877 AUTH. No. 27528

THOMAS ENGINEERING
6300 NW 31ST AVE.
FORT LAUDERDALE, FL 33309
PH: (954) 202-7000
FX: (954) 202-7020
www.ThomasEngineeringGroup.com

THESE PLANS ARE SUBJECT TO FEDERAL COPYRIGHT LAWS. ANY USE OF SAME WITHOUT THE EXPRESSED WRITTEN PERMISSION OF RACETRAC PETROLEUM, INC. IS PROHIBITED.

RaceTrac

RACETRAC PETROLEUM, INC.
GRIFFIN ROAD & SW 40TH AVENUE
HOLLYWOOD, BROWARD COUNTY
FLORIDA 33312

RACETRAC STANDARD DETAILS

RACETRAC MARKET

3990 GRIFFIN ROAD
Hollywood, Florida 33312

DATE	09/17/2018
SCALE	
DRAWN-BY	AG
DRAWING NAME:	
SD3	1
SHEET NO.	VERSION

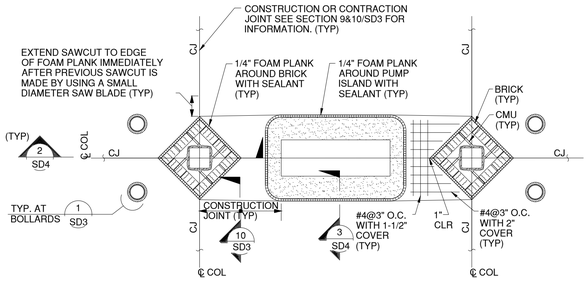

PUMP ISLAND CONCRETE DETAIL (1 / SD4)

NTS

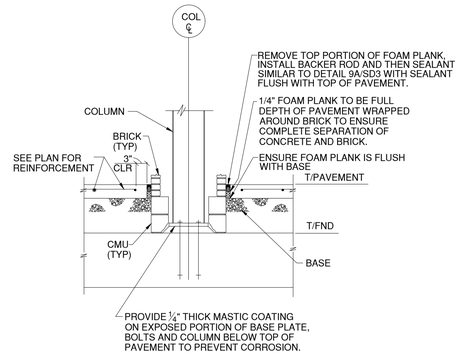

COLUMN SECTION (2 / SD4)

NTS

NOTE: SEE SECTION 9/SD3 FOR INFORMATION NOT SHOWN

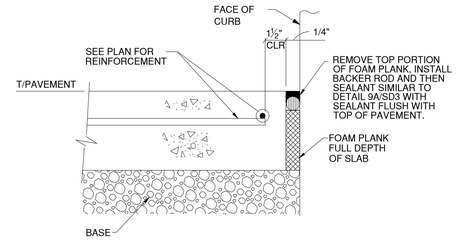

PUMP ISLAND SECTION (3 / SD4)

NTS

NOTE: SEE SECTION 9/SD3 FOR INFORMATION NOT SHOWN

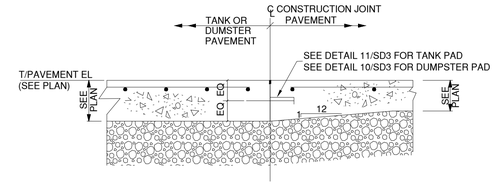

CONSTRUCTION JOINT AT TANK AND DUMSTER PAVEMENT SECTION (4 / SD4)

NTS

NOTES:

1.) SEE SECTION 10/SD3 FOR INFORMATION NOT SHOWN
2.) THIS SECTION ASSUMES THE TANK OR DUMPSTER PAVEMENT WILL BE PLACED PRIOR TO THE THINNER MAIN PAVEMENT.

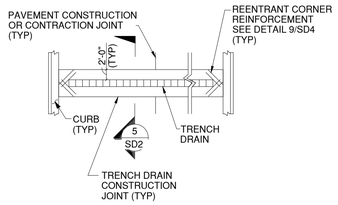

TRENCH PLAN DETAIL (5 / SD4)

NTS

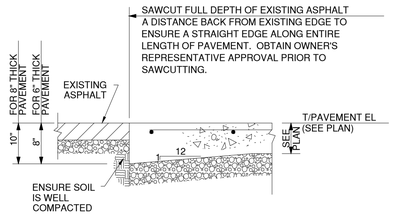

CONCRETE / EXISTING ASPHALT SECTION (6 / SD4)

NTS

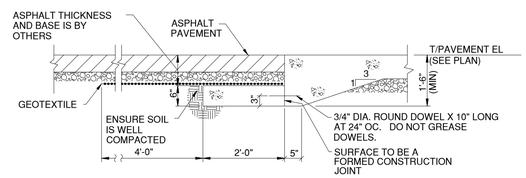

CONCRETE / NEW ASPHALT SECTION (6A / SD4)

NTS

NOTES FOR 6 AND 6A:

1.) SEE SECTION 10/SD3 FOR INFORMATION NOT SHOWN
2.) REFER TO LOCAL JURISDICTION REQUIREMENTS FOR SPECIFIC CONNECTION DETAILS.

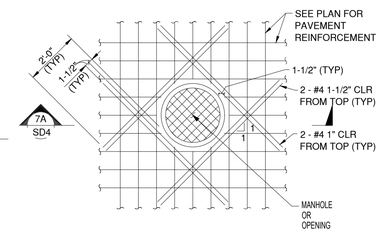

TANK MANHOLE DETAIL (7 / SD4)

NTS

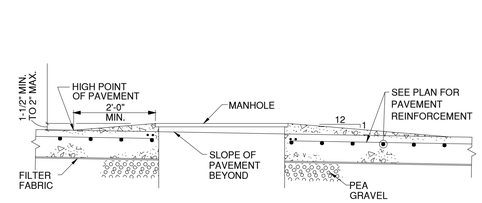

TANK MANHOLE SECTION (7A / SD4)

NTS

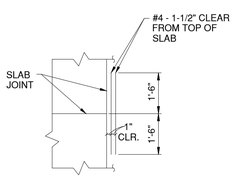

DISCONTINUOUS SLAB REINFORCEMENT JOINT DETAIL (8 / SD4)

NTS

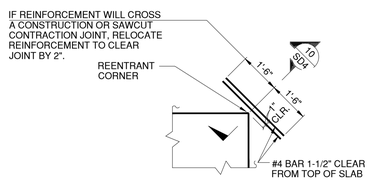

TYPICAL REENTRANT CORNER DETAIL

REENTRANT CORNER DETAIL (9 / SD4)

NTS

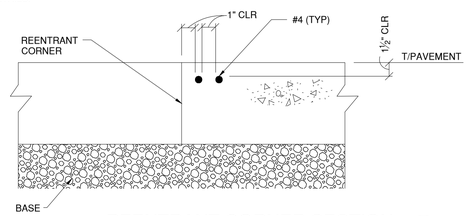

REENTRANT CORNER SECTION (10 / SD4)

NTS

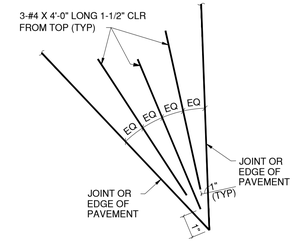

RADIUS REINFORCEMENT DETAIL (11 / SD4)

NTS

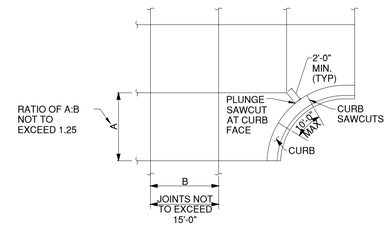

PARTIAL TYPICAL PLAN

NTS

NTS

DETAIL (12 / SD4)

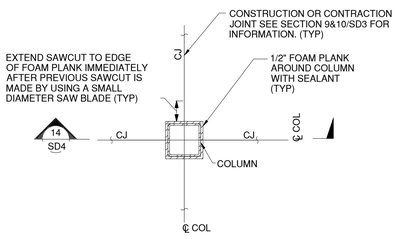

FL COLUMN DETAIL (13 / SD4)

NTS

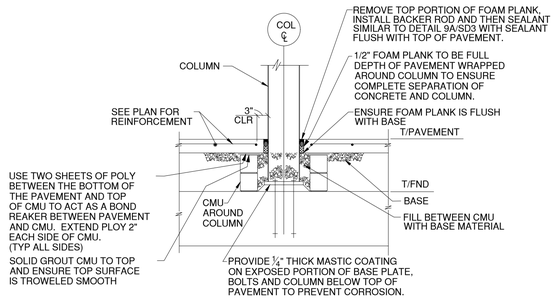

FL COLUMN SECTION (14 / SD4)

NTS

NOTE: SEE SECTION 9/SD3 FOR INFORMATION NOT SHOWN

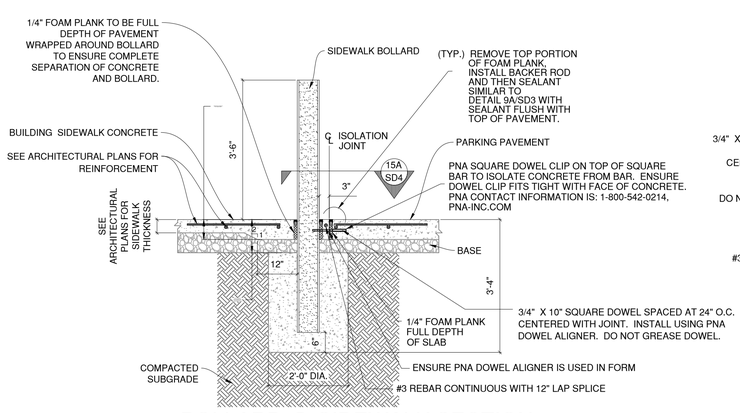

BOLLARD @ SIDEWALK SECTION (15 / SD4) N.T.S.

1. FOR ADDITIONAL NOTES SEE DETAIL 9 SD1

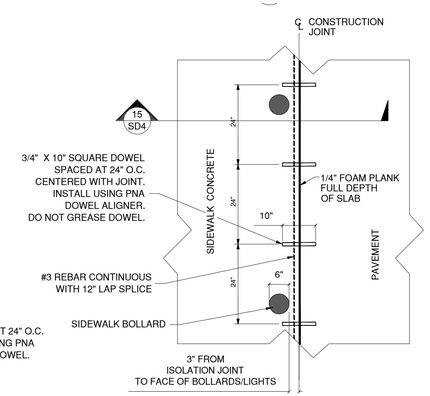

ISOLATION JOINT @ SIDEWALK PARTIAL PLAN (15A / SD4)

NTS

NO.	DATE
PRELIMINARY TAC MEETING	10/08/2018
FINAL TAC MEETING	11/19/2018

THOMAS ENGINEERING GROUP
6300 NW 31ST AVE.
FORT LAUDERDALE, FL 33309
PH: (954) 202-7000
FX: (954) 202-7070
www.ThomasEngineeringGroup.com

THESE PLANS ARE SUBJECT TO FEDERAL COPYRIGHT LAWS: ANY USE OF SAME WITHOUT THE EXPRESSED WRITTEN PERMISSION OF RACETRAC PETROLEUM, INC. IS PROHIBITED.

RACETRAC PETROLEUM, INC.
GRIFFIN ROAD & SW 40TH AVENUE
HOLLYWOOD, BROWARD COUNTY
FLORIDA 33312

RACETRAC STANDARD DETAILS

RACETRAC MARKET

3990 GRIFFIN ROAD
Hollywood, Florida 33312

DATE	09/17/2018
SCALE	
DRAWN-BY	AG
DRAWING NAME:	
SHEET NO.	VERSION
SD4	1

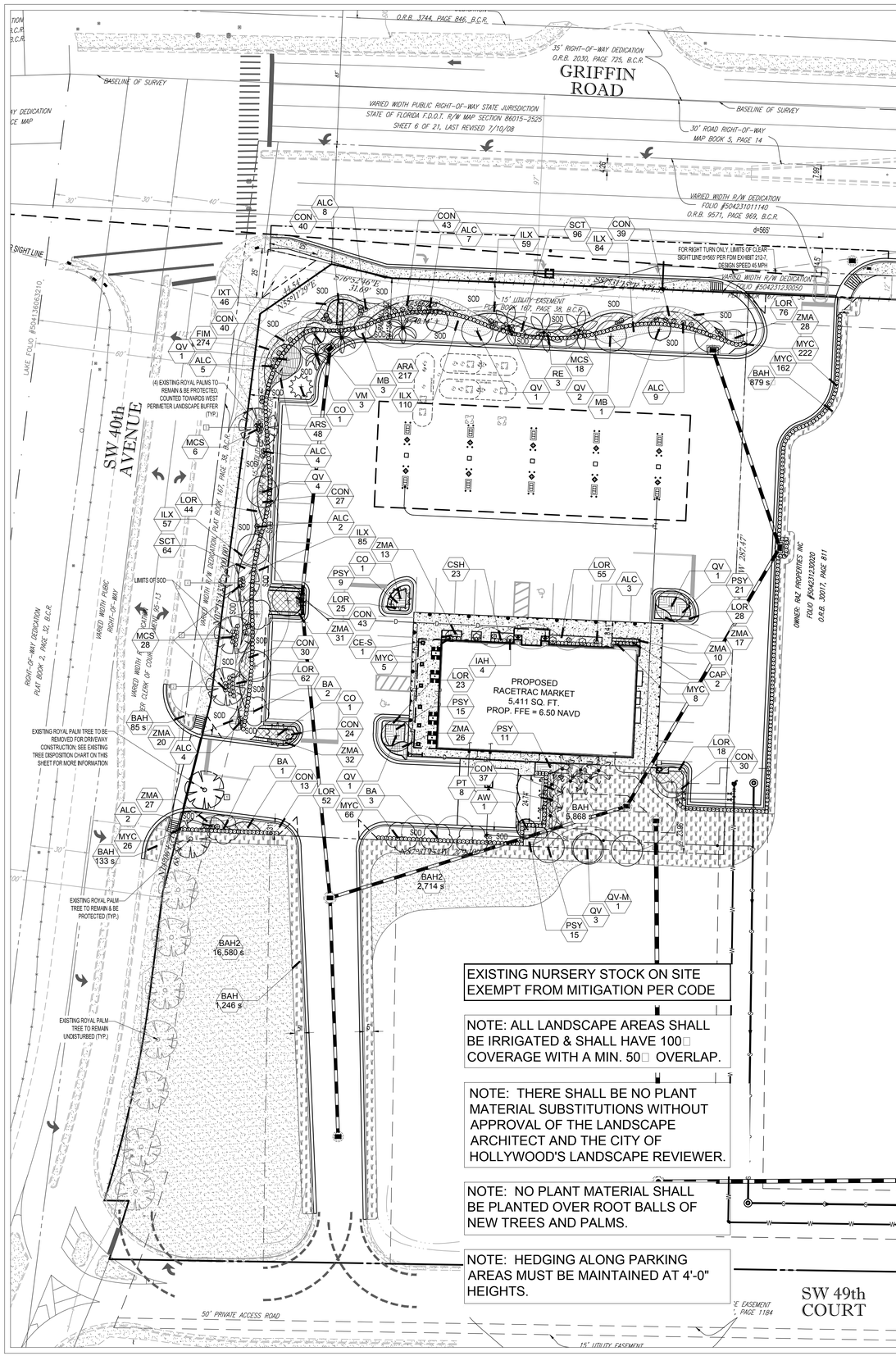

EXISTING NURSERY STOCK ON SITE EXEMPT FROM MITIGATION PER CODE

NOTE: ALL LANDSCAPE AREAS SHALL BE IRRIGATED & SHALL HAVE 100□ COVERAGE WITH A MIN. 50□ OVERLAP.

NOTE: THERE SHALL BE NO PLANT MATERIAL SUBSTITUTIONS WITHOUT APPROVAL OF THE LANDSCAPE ARCHITECT AND THE CITY OF HOLLYWOOD'S LANDSCAPE REVIEWER.

NOTE: NO PLANT MATERIAL SHALL BE PLANTED OVER ROOT BALLS OF NEW TREES AND PALMS.

NOTE: HEDGING ALONG PARKING AREAS MUST BE MAINTAINED AT 4'-0" HEIGHTS.

ALL EXISTING PLANT MATERIALS OR SOD DAMAGED OR DESTROYED BY CONSTRUCTION TO BE REPLACED WITH LIKE MATERIALS

ALL PERVIOUS AREA TO REMAIN THAT IS DISTURBED BY CONSTRUCTION & NOT NOTED ON THE LANDSCAPE PLAN TO HAVE SHRUBS/GROUNDCOVERS SHALL BE SODDED WITH ST. AUGUSTINE 'FLORITAM' SOLID SOD (ON-SITE) OR TO MATCH EXISTING BY THE CONTRACTOR

NOTE: ALL ABOVE GROUND MECHANICAL EQUIPMENT SUCH AS, BUT NOT LIMITED TO, EXTERIOR UTILITY BOXES, METERS, & TRANSFORMERS NOT CURRENTLY KNOWN OR DEPICTED SHALL BE VISUALLY SCREENED A MIN. OF 6" ABOVE THE TOP OF THE EQUIPMENT. BACKFLOW PREVENTERS SHALL BE PAINTED TO MATCH THE PRINCIPAL STRUCTURE

EXISTING TREE DISPOSITION CHART

RACETRAC - HOLLYWOOD, FL

TREE NO.	BOTANICAL NAME	COMMON NAME	HT	SPR	DBH	CONDITION	DISPOSITION	CANOPY AREA (s.f.)
1	Roystonea regia	Royal Palm	30' gw	20	18	70%	remove	314
2	Roystonea regia	Royal Palm	30' gw	22	18	70%	REMAIN	379.94
3	Roystonea regia	Royal Palm	28' gw	20	18	70%	REMAIN	314
4	Roystonea regia	Royal Palm	29' gw	20	18	70%	REMAIN	314
5	Roystonea regia	Royal Palm	42' gw	22	18	70%	REMAIN	379.94
	TREE REPLACEMENTS PER HOLLYWOOD CODE					TOTAL CANOPY REMOVED FROM SITE(sq. ft.):		314
	OF ORDINANCES					314/300 sf = REQ. CAT 1 REPLACEMENT TREES:		2

CITY OF HOLLYWOOD FLORIDA

CODE COMPLIANCE CHART B-3

CITY OF HOLLYWOOD LANDSCAPE MANUAL

NET SITE AREA:74,609.58 SF (1.71 ACRES)

SECTION 2.3: COMMERCIAL DISTRICTS (C-1 THROUGH C-5)

	REQUIRED	PROVIDED
Perimeter Landscape Buffer		
1 Swale Street Tree/50 lf of Street Frontage:		
1 Shrub/2 l.f.		
North @ Griffin Rd.: 254.85 lf	6 TREES	6 TREES
	128 SHRUBS	Exceeds
West @ SW 40th Ave.: 268.24 lf	6 TREES	4 EX. PALMS @1:1 & 2 TREES
	135 SHRUBS	Exceeds
1 Tree/20 lf of 5' Perimeter Buffer:		
South: 279.1 f	N/A - OUTPARCEL	
East: 287.47 lf	N/A - OUTPARCEL	
1 Tree/20 lf Where Abutting or Across an Alley/Residential:	N/A	
Interior Landscaping for Vehicular Use Areas (44,458.40 SF)		
For Lots Greater than 50' wide: 25% of Total sf of Paved VUA shall be used for Landscaping:	11,114.6 SF	14,564.29 SF
1 Tree/Required Parking Island: (7 islands)	7 TREES	7 TREES
Each Island shall contain 190 sf Min. of Pervious Area		Complies
Open Space:		
1 Tree/1000 sf of Pervious Area in Addition to Parking Areas: (18,312.73 sf/1000)	19 TREES	19 TREES
Mitigation: 314 SF OR 314/300 sf = (2) REQ. CAT 1 REPLACEMENT TREES	314 SF OR (2) CAT. 1 TREES	450 SF FROM (1) CAT. 2 TREE & (1) CAT. 1 TREE
TOTAL	38 TREES	38 TREES*
Minimum Tree Sizes:		
Trees: 8.5' ht/2" dbh; Swale Trees: 12' ht./2" dbh		
Palms: 6' clear wood (50% Max.of code requirements) @ 3:1; Specimen Palms @1:1		
	native/required	native/provided
Native: 60% Trees	23/38 TREES	28/38 TREES
50% Shrubs	132/263 SHRUBS	169/1/2604 SHRUBS
Drought Tolerant: 80% for all Materials per Ordinance 0-2011-06 Mandatory Green Building Practices	TREES	73.6%
	SHRUBS	64.9%
SECTION 2.8: PARKING LOT LANDSCAPE		
A Perimeter Wall or Hedge of at Least 3.5 ft in height is required	PROVIDED	

* INCLUDES (4) EXISTING SPECIMEN PALMS COUNTED @1:1 TOWARDS WEST PERIMETER BUFFER REQUIREMENTS, (27) PROPOSED TREES, (4) TREES FROM [12] PROP. PALMS @3:1, & (3) PROP. SPECIMEN PALMS @1:1

CITY OF HOLLYWOOD ZONING AND LAND DEVELOPMENT REGULATIONS

CHAPTER 106: TREES

Replacement Trees Shall be on a Canopy Square Footage Basis

314 SF of Canopy to be removed = (1) Category I Replacement Trees @300 SF each & (1) Category 2 Replacement Tree @150 SF

(1) CATEGORY 1 MITIGATION TREE & (1) CATEGORY 2 MITIGATION TREE *PROVIDED; SEE LANDSCAPE PLAN*

The Amount of Replacement Contribution Will be Determined by the Director of the Office of Planning using current tree Replacement Values, Plus Installation and Maintenance

PLANT SCHEDULE

TREES	QTY	COMMON NAME	BOTANICAL NAME	SPECIFICATIONS	CAL/DBH	HEIGHT	SPREAD	NATIVE	XERIC	REMARKS
BA	6	Verawood	Bu nesia arborea	B & B	2.5" DBH	12□H□	5-6□	No	High	5□CT
CO	3	Sa in ea□	Chr□soph□□um o ivi orme	B & B	2" DBH	12□H□	5-6□	Yes	High	5□CT
MB	4	□D.D. B anchard□Magno la	Magno la grandi□ora □D.D. B anchard□TM	B & B	2" DBH	12□H□	5□	Yes	High	3□CT
QV	14	Sou hern Live Oa□	Quercus virginiana	B & B	3" DBH	12-14□h□	6□	Yes	High	6□CT
MITIGATION TREES	QTY	COMMON NAME	BOTANICAL NAME	SPECIFICATIONS	CAL/DBH	HEIGHT	SPREAD	NATIVE	XERIC	REMARKS
CE-S	1	Si ver Bu□onwood	Conocarpus erec us v. sericeus	B & B	2" DBH	10-12□H□	4□5□	Yes	High	5□CT□CAT. 2
QV-M	1	Sou hern Live Oa□	Quercus virginiana	B & B	3" DBH	12-14□h□	6□	Yes	High	6□CT□CAT. 1
PALMS	QTY	COMMON NAME	BOTANICAL NAME	SPECIFICATIONS	CAL/DBH	HEIGHT	SPREAD	NATIVE	XERIC	REMARKS
AW	1	Pauro is Pa m	Acoe orrhaphe wrigh ii	B & B		10□H□	4□5□	Yes	High	7 S ems Min., 10□CT□Coun ed □ 3:1
PT	8	A e□ander Pa m	P□chosperma e egans	B & B		16□H□	7-8□spr,	No	Medium	□ 3:1□sing e□m□
VM	3	Mon gomer□Pa m	Vei chia mon gomer□ana	B & B			8-10□	No	Medium	10□gw□□ 3:1
SPECIMEN PALMS	QTY	COMMON NAME	BOTANICAL NAME	SPECIFICATIONS	CAL/DBH	HEIGHT	SPREAD	NATIVE	XERIC	REMARKS
RE	3	F orida Ro a□Pa m	Ro s onea e a a	B & B		6□gw	18□	Yes	High	□ 1:1□Ma ched
SHRUBS	QTY	COMMON NAME	BOTANICAL NAME	SPECIFICATIONS	SPACING	HEIGHT	SPREAD	NATIVE	XERIC	REMARKS
ALC	44	Go den Trumpe□	A□amanda ca har ica □Hendersonii□	7 ga□	As Shown	36"	30"	No	Medium	
CAP	2	Jamaica Caper	Capparis c□nopha□ophora	25 ga□	As Shown	6□	4-5□	Yes	High	30" CT
CSH	23	Si ver Bu□on Wood	Conocarpus erec us sericeus	3 ga□	24"	24"	24"	Yes	High	□u□□o base
IAH	4	Eas□Pa a□a Ho□□	I e□a□enua a	7 ga□	30"	48"	30"	Yes	High	Fu□□o base
MCS	52	Pin□Muh□□	Muh enbergia capi□aris	n/a	24"	16"	18"	Yes	High	
MYC	489	Compac□Simpson s S opper	M rcian hes □ragrans □compac a□	NA	24"	24"	24"	Yes	High	□u□□o base
SHRUB AREAS	QTY	COMMON NAME	BOTANICAL NAME	SPECIFICATIONS	SPACING	HEIGHT	SPREAD	NATIVE	XERIC	REMARKS
ARS	48	Wiregrass	Aris ida s ric a	n/a	24"	16-18"	16-18"	Yes	High	Fu□□o base
CON	366	Si ver Bu□on Wood	Conocarpus erec us sericeus	n/a	18"	16-18"	16-18"	Yes	High	Fu□□
IXT	46	Dwar□Red I ora	I ora coccinea □Pe i e Red□	3 ga□	16"	16"	14"	No	Medium	
PSY	71	Wid Co ee	Ps cho ria nervosa	n/a	30"	20"	18-24"	Yes	High	
SCT	160	Sche□□era	Sche□□era arborico a □Trine e□	3 ga□	24"	18"	18"	No	High	Fu□□o base
ZMA	204	Coon ie Pa m	Zamia □oridana	3 ga□	18"	14-16"	18"	Yes	High	
GROUND COVERS	QTY	COMMON NAME	BOTANICAL NAME	SPECIFICATIONS	SPACING	HEIGHT	SPREAD	NATIVE	XERIC	REMARKS
ARA	217	Perennia□Peanu□	Arachis g abra a	n/a	14"	6"	12-14"	Yes	High	
BAH	8,211 s□	Bahia Grass	Paspa um no a um □Argen ine□	n/a					High	SOD
BAH2	19,294 s□	Bahia Grass	Paspa um no a um □Argen ine□	n/a					High	SEED
FIM	274	Green Is and Ficus	Ficus microcarpa □Green Is and□	1 ga□	16"	14-16"	14-16"	No	Medium	
ILX	395	Dwar□Schi□ings Ho□□	I e□vomi oria □Schi□ings Dwar□□	n/a	18"	10-12"	14"	Yes	High	
LOR	464	Rub□Lorope a um	Lorope a um chinense □Rub□□	n/a	18"	14-16"	10-12"	No	High	Fu□c umps

ALL SOD SHALL BE ST. AUGUSTINE 'FLORITAM' SOLID SOD UNLESS OTHERWISE NOTED

30 15 0 30 60 90 120

GRAPHIC SCALE IN FEET

DATE	DESCRIPTION
10/08/2018	PRELIMINARY TAC MEETING
11/19/2018	FINAL TAC MEETING

NO. | DATE

REGISTERED LANDSCAPE ARCHITECT RAJESH KUMAR KING SAMANMIAN LA0667324 STATE OF FLORIDA

FLORIDA BUSINESS LICENSE #26000 C.O.A. No. 27535

THOMAS ENGINEERING GROUP
6300 NW 31ST AVE.
FORT LAUDERDALE, FL 33309
PH: (954) 202-7000
FX: (954) 202-7070
www.ThomasEngineeringGroup.com

THESE PLANS ARE SUBJECT TO FEDERAL COPYRIGHT LAWS: ANY USE OF SAME WITHOUT THE EXPRESS WRITTEN PERMISSION OF RACETRAC PETROLEUM, INC. IS PROHIBITED.

RACETRAC PETROLEUM, INC.
GRIFFIN ROAD & SW 40TH AVENUE
HOLLYWOOD, BROWARD COUNTY
FLORIDA 33312

LANDSCAPE PLAN
RACETRAC MARKET
3990 GRIFFIN ROAD
Hollywood, Florida 33312

DATE	10/22/2018
SCALE	1" = 30'
DRAWN-BY	RJK
DRAWING NAME:	LANDSCAPE PLAN
□-1□□	1
SHEET NO.	VERSION

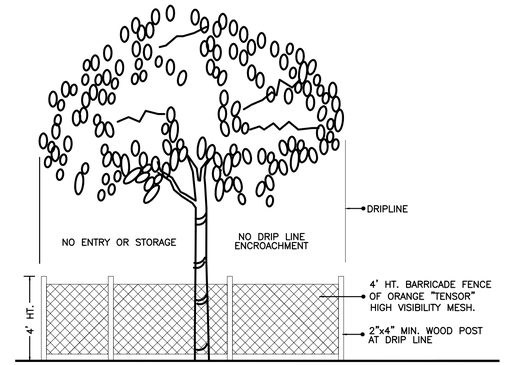

1 TREE PRESERVATION BARRICADE FENCING DETAIL

N.T.S.

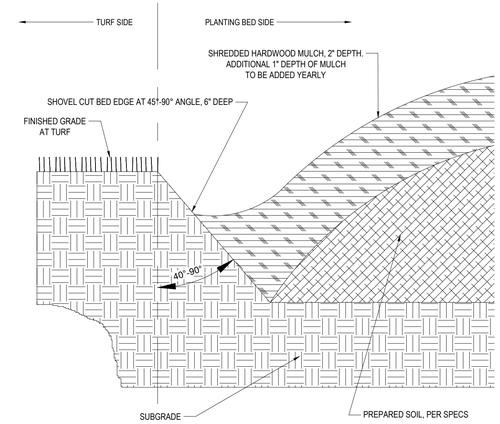

2 SHOVEL CUT BED EDGE

NTS

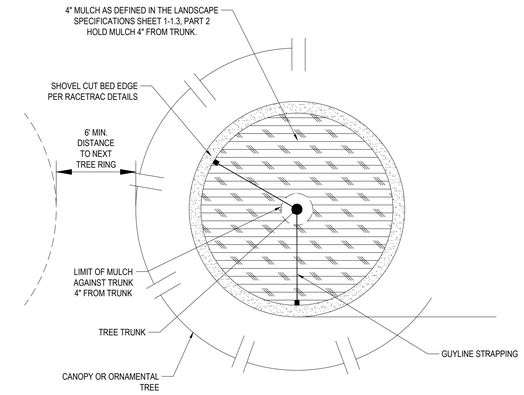

3 MULCHING RING AT TREES

NTS

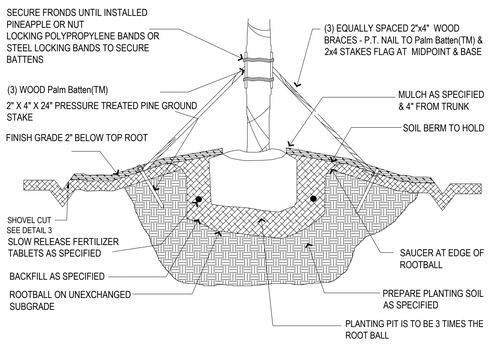

4 STAKED PALM TREE

NTS

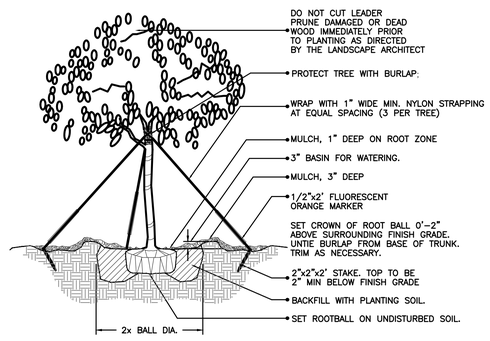

(2" cal. and over)

5 LARGE TREE PLANTING DETAIL

N.T.S.

A = ROW SPACING
B = ON CENTER SPACING

SPACE PLANTS IN A TRIANGULAR PATTERNAS SHOWN, SPACED EQUALLY FROM EACHOTHER AT SPACING INDICATED ON PLANT LIST.

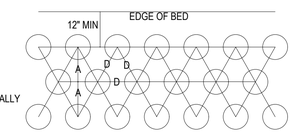

PLANT ROW SPACING 'D'	ROW SPACING 'A'	PLANTS/10SF
8" O.C.	6.9"	26
12" O.C.	10.4"	12
15" O.C.	13.0"	7
18" O.C.	15.7"	5

4" MULCH AS DEFINED IN LANDSCAPE SPECIFICATIONS SHEET L-1.3 PART 2. PLACE MULCH IN BED PRIOR TO PLANTING GROUNDCOVER/ANNUALS.

PREPARE GROUNDCOVER BED BY TILLING ENTIRE BED AREA. PROVIDE SOIL MIX AS DEFINED IN THE LANDSCAPE SPECIFICATIONS ON SHEET L-1.3 PART 3

EXISTING SUBGRADE

6 GROUNDCOVER PLANTING

NTS

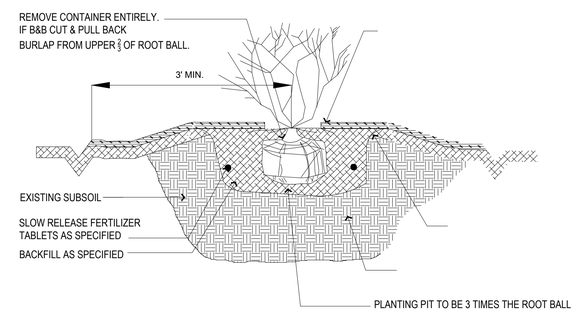

7 SHRUB(GENERAL)

NTS

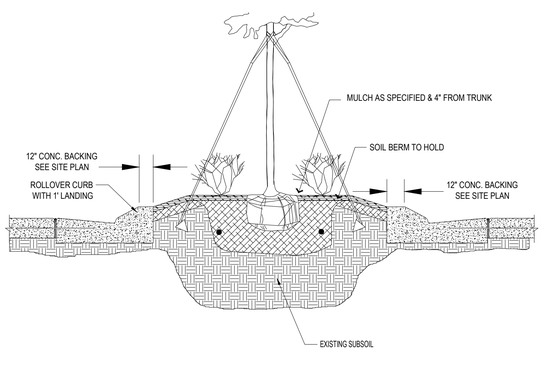

8 LANDSCAPE ISLAND BED (TYP)

NTS

#1 * BALL DIAMETER

#2 * 1/3 BALL DIAMETER
ELONGATED PITS MAY BE USED ON SLOPES AS DIRECTED BY THE ENGINEER. RECTANGULAR OR SQUARE PITS ARE ACCEPTABLE PROVIDED THEY ACCOMMODATE THE PLANTS AS SHOWN.

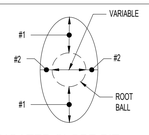

ELONGATED SLOPE PIT

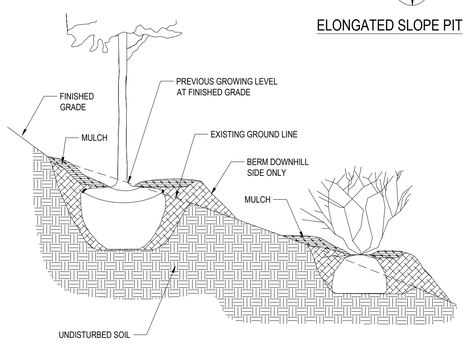

9 PLANT PLACEMENT ON SLOPE

NTS

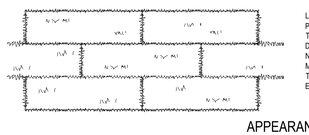

LAY SOD IN A STAGGERED PATTERN. BUTT THE STRIPS TIGHTLY AGAINST EACH OTHER. DO NOT LEAVE SPACES AND DO NOT OVERLAP. A SHARPENED MASON'S TROWEL IS A HANDY TOOL FOR TUCKING DOWN THE ENDS AND TRIMMING PIECES.

APPEARANCE OF GOOD SOD

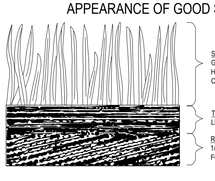

SHOOTS - OR GRASS BLADES. GRASS SHOULD BE GREEN AND HEALTHY, MOWED AT A 2"-3" CUTTING HEIGHT.

THATCH - GRASS CLIPPINGS AND DEAD LEAVES, UP TO 1/2" THICK.

ROOT ZONE - SOIL AND ROOTS SHOULD BE 1/2" - 3/4" THICK, WITH DENSE ROOT MAT FOR STRENGTH.

SOD PLANTING REQUIREMENTS

GRASS	VARIETIES	RESOURCE AREA	GROWING SEASON
BERMUDA GRASS	COMMON TIFWAY TIFGREEN TIFLAWN	M-L,P,C P,C P,C P,C	WARM WEATHER
BAHIA GRASS	PENSACOLA	P,C	WARM WEATHER
CENTIPEDE	-	P,C	WARM WEATHER
ST. AUGUSTINE	COMMON BITTERBLUE RALEIGH	C	WARM WEATHER
ZOYSIA	EMERALD MYER	P,C	WARM WEATHER
TALL FESCUE	KENTUCKY	M-L,P	COOL WEATHER

FERTILIZER REQUIREMENTS FOR SOD

TYPES OF SPECIES	PLANTING YEAR	FERTILIZER (N-P-K)	RATE (lbs/acre)	NITROGEN TOP DRESSING RATE (lbs/acre)
COOL SEASON GRASSES	FIRST SECOND	6-12-12 6-12-12	1500 1000	50-100 -
	MAINTENANCE	10-10-10	400	30
WARM SEASON GRASSES	FIRST SECOND	6-12-12 6-12-12	1500 800	50-100 50-100
	MAINTENANCE	10-10-10	400	30

NOTE: NO ROLLED SOD IN FLORIDA

FERTILIZER REQUIREMENTS FOR SOIL SURFACE APPLICATION

FERTILIZER TYPE	FERTILIZER RATE (lbs/acre)	FERTILIZER RATE (lbs/sq ft)	SEASON
10-10-10	1000	.025	FALL

10 SOD

NTS

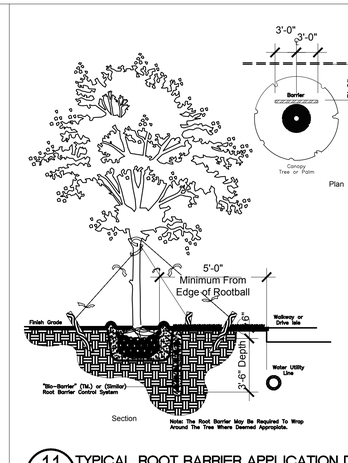

"Bio-Barrier" Is Manufactured By:
"Reemay, Inc." - 70 Old Hickory Blvd. - P.O.Box 511 Old Hickory, TN 37138 - Phone: 1-800-25-ROOTS

Applicable Use of Root Barriers:

If a Canopy Tree and/ or Palm Is To Be Installed Within Less Than (10') Ten Feet Separation From A Water Main (or Service) and/ or Sewer Main (or Service). The Landscape Contractor Shall Install a Root Barrier Parallel To The Utility As Required and as per This Detail. The Contractor Shall Maintain A (5') Five Feet Minimum Horizontal Distance From Outside Edge of Rootball To The Utility or any Paved or Concrete Surface.

The Landscape Contractor Shall Verify The Existing Locations of The Applicable Water Utilities, In The Field, Prior To Any Tree Installations Requiring A Root Barrier.

Suggested Installation Method:

Dig A Vertical Trench Between The Root Source of The Tree and The Surface and/ or Utility Line To Be Protected. The Trench Must Be At Least 6'-0" In Length (Centered On Tree) and Must Be at Least 4'-0" In Depth Parallel To The Applicable Surface, Service and/ or Utility. Note: For New Tree Installations, Trench May Be Dug At The Same Time as The Hole For The Applicable Tree and/ or Palm.

Using Impervious Gloves, Roll Out "Bio-Barrier" and Trim To Fit The Specific Application. Insert The Barrier Vertically Into The Trench, With The Top Edge of The Barrier (6") Six Inches Below The Soil Surface.

Tamp Backfill Firmly Into Trench With "Bio-Barrier" Contained, Eliminating Air Pockets or Soil Voids Accordingly. Dissolve The Coating and Activate The Product By Saturating The Backfill and "Bio-Barrier" With Water. After Completed, Smooth The Soil Surface To Finish Grade, Allowing Excess Material For Soil Setting.

11 TYPICAL ROOT BARRIER APPLICATION DETAIL

N.T.S.

NO.	DATE
PRELIMINARY TAC MEETING	10/08/2018
FINAL TAC MEETING	11/19/2018

REGISTERED LANDSCAPE ARCHITECT KING ESKANIMIAN LA0667024 STATE OF FLORIDA

FLORIDA BUSINESS LICENSE LC AUTH No. 27328

THOMAS engineering group
6300 NW 31ST AVE.
FORT LAUDERDALE, FL 33309
PH: (954) 202-7000
FX: (954) 202-7070
www.ThomasEngineeringGroup.com

THESE PLANS ARE SUBJECT TO FEDERAL COPYRIGHT LAWS: ANY USE OF SAME WITHOUT THE EXPRESSED WRITTEN PERMISSION OF RACETRAC PETROLEUM, INC. IS PROHIBITED.

RACETRAC PETROLEUM, INC.
GRIFFIN ROAD & SW 40TH AVENUE
HOLLYWOOD, BROWARD COUNTY
FLORIDA 33312

LANDSCAPE STANDARD DETAILS

RACETRAC MARKET

3990 GRIFFIN ROAD
Hollywood, Florida 33312

DATE	10/22/2018
SCALE	1" = 30'
DRAWN-BY	RJK
DRAWING NAME: LANDSCAPE PLAN	
L-1.1	1
SHEET NO.	VERSION

PART 1 - GENERAL

DESCRIPTION

Provide trees, plants and ground covers as shown and specified. The work includes:

1. Soil preparation. (Topsoil to be provided by GC)
2. Trees, plants and ground covers.
3. Planting mixes.
4. Mulch and planting accessories.
5. Maintenance until final acceptance by RaceTrac Construction Manager

Related Work:

1. Irrigation System.

QUALITY ASSURANCE

Plant names indicated, comply with "Standardized Plant Names" as adopted by the latest edition of the American Joint Committee of Horticultural Nomenclature. Names of varieties not listed conform generally with names accepted by the nursery trade. Provide stock true to botanical name and legibly tagged.

Comply with sizing and grading standards of the latest edition of "American Standard for Nursery Stock". A plant shall be dimensioned as it stands in its natural position.

All plants shall be nursery grown under climatic conditions similar to those in the locality of the project for a minimum of 2 years.

Stock finished shall be at least the minimum size indicated. Larger stock is acceptable, at no additional cost, and providing that the larger plants will not be cut back to size indicated. Provide plants indicated by two measurements so that only a maximum of 25% are of the minimum size indicated and 75% are of the maximum size indicated.

Before submitting bid, the Contractor shall have investigated the sources of supply and satisfied himself that he can supply the listed plants in the size, variety and quality listed and specified. Failure to take this precaution will not relieve the Contractor from his responsibility for furnishing and installing all plant materials in strict accordance with the Contract Documents without additional cost to the Owner. Landscape Architect shall approve any substitutes of plant material or changes in plant material size prior to contractor submitting a bid.

SUBMITTALS

The Landscape Contractor shall submit the following materials certification:

1. Photographs of landscape material to be used or locations of nurseries for Landscape Architect to tag material.
2. Boulders and rock mulch samples on site and available for approval by Landscape Architect on first site visit during construction. Photographs of boulders and rock mulch may be offered as alternatives to samples on site.
3. Red Oak double shredded hardwood mulch sample on site for approval by Landscape Architect on first site visit during construction.
4. Routine soil test by approved laboratory and or state cooperative. Mix together a minimum of 5 soil cores per site for testing.
5. Upon plant material acceptance, submit written maintenance instructions recommending procedures for maintenance of plant materials.

Upon plant material acceptance, submit written maintenance instructions recommending procedures for maintenance of plant materials.

DELIVERY, STORAGE AND HANDLING

Deliver fertilizer materials in original, unopened, and undamaged containers showing weight, analysis, and name of manufacturer. Store in manner to prevent wetting and deterioration.

Take all precautions customary in good trade practice in preparing plants for moving. Workmanship that fails to meet the highest standards will be rejected. Spray deciduous plants in foliage with an approved "Anti-Desiccant" immediately after digging to prevent dehydration. Dig, pack, transport, and handle plants with care to ensure protection against injury. Inspection certificates required by law shall accompany each shipment invoice or order to stock. Protect all plants from drying out. If plants cannot be planted immediately upon delivery, properly protect them with soil, wet peat moss, or in a manner acceptable to the Landscape Architect. Water heeled-in plantings daily. No plant shall be bound with rope or wire in a manner that could damage or break the branches or trunk.

Cover plants transported on open vehicles with a protective covering to prevent wind burn.

Provide dry, friable, loose topsoil for planting bed mixes. Amend with 4 parts screened topsoil and 1 part organic material (ie. Nature's Helper, Pro-Mix). Frozen or muddy topsoil is not acceptable.

PROJECT CONDITIONS

Protect existing utilities, paving, and other facilities from damage caused by landscaping operations.

A complete list of plants, including a schedule of sizes, quantities, and other requirements is shown on the drawings. In the event that quantity discrepancies or material omissions occur in the plant materials list, the planting plans shall govern.

The irrigation system will be installed prior to planting. Locate, protect and maintain the irrigation system during planting operations. Repair irrigation system components, damaged during planting operations, at this Contractor's expense. Do not begin landscape accessory work before completion of final grading or surfacing.

WARRANTY

Warrant plant material to remain alive and be in a healthy, vigorous condition for a period of 1 year after completion and final acceptance of entire project.

Replace, in accordance with the drawings and specifications, all plants that are dead or, are in an unhealthy or unsightly condition, and have lost their natural shape due to dead branches, or other causes due to the Contractor's negligence. The cost of such replacement(s) is at Contractor's expense. Warrant all replacement plants for 1 year after installation.

Warranty shall not include damage or loss of trees, plants or ground covers caused by fires, floods, freezing rains, lightning storms or winds over 75 miles per hour, winter kill caused by extreme cold and severe winter conditions not typical of planting area; acts of vandalism or negligence on the part of the Owner.

Remove and immediately replace all plants, found to be unsatisfactory during the initial planting installation. Maintain plant material and lawns until final acceptance is made.

ACCEPTANCE

Inspection to determine acceptance of planted areas will be made by the Owner's representative or Landscape Architect.

1. Planted areas will be accepted provided all requirements, including maintenance, have been complied with and plant materials are alive and in a healthy, vigorous condition.

The Contractor will commence the specified plant maintenance once plants have been planted and until final acceptance.

CODES, PERMITS AND FEES

Obtain any necessary permits for this Section of Work and pay any fees required for permits.

The entire installation shall fully comply with all local and state laws and ordinances, and with all established codes applicable thereto.

PART 2 - PRODUCTS

MATERIALS

Plants: Provide plants typical of their species or variety; with normal, densely-developed branches and vigorous, fibrous root systems. Provide only sound, healthy, vigorous plants free from defects, disfiguring knots, sun scald injuries, frost cracks, abrasions of the bark, plant diseases, insect eggs, borers, and all forms of infestation. All plants shall have a fully developed form without voids and open spaces. Plants held in storage will be rejected if they show signs of growth during storage.

1. Dig balled and burlaped plants with firm, natural balls of earth of sufficient diameter and depth to encompass the fibrous and feeding root system necessary for full recovery of the plant. Provide ball sizes complying with the latest edition of the "American Standard for Nursery Stock". Cracked or mushroomed balls are not acceptable.
2. Container-grown stock: Grown in a container for sufficient length of time for the root system to have developed to hold its soil together, firm and whole.
   a. No plants shall be loose in the container.
   b. Container stock shall not be pot bound or have circling roots. Circling roots will be rejected.
3. Provide trees species that mature at heights over 25 feet with a single main trunk. Trees that have the main trunk forming a "Y" shape are not acceptable.
4. Plants planted in rows shall be matched in form.
5. Plants larger than those specified in the plant list may be used when acceptable to the Landscape Architect.
   a. If the use of larger plants is acceptable, increase the spread of roots or root ball in proportion to the size of the plant.
6. The height of the trees, measured from the crown of the roots to the top of the top branch, shall not be less than the minimum size designated in the plant list.
7. No pruning wounds shall be present with a diameter of more than 1" and such wounds must show vigorous bark on all edges.
8. Evergreen trees shall be branched to the ground unless specified otherwise.
9. Shrubs and small plants shall meet the requirements for spread and height indicated in the plant list.
   a. The measurements for height shall be taken from the ground level to the height of the top of the plant and not the longest branch.
   b. Single stemmed or thin plants will not be accepted.
   c. Side branches shall be generous, well-twigged, and the plant as a whole well-bushed to the ground.
   d. Plants shall be in a moist, vigorous condition, free from dead wood, bruises, or other root or branch injuries.

ACCESSORIES

Topsoil for Planting Beds: Fertile, friable, natural topsoil of loamy character, without admixture of subsoil material, obtained from a well-drained arable site, reasonably free from clay, lumps, coarse sands, stones, plants, roots, sticks, and other foreign materials, with acidity range of between pH 6.0 and 6.8. Topsoil to be at a minimum depth of 6" in planting beds and 4" depth in sodded areas.

Fertilizer: Similar or equal to Milorganite (6-3-0).

Anti-Desiccant: Protective film emulsion providing a protective film over plant surfaces; permeable to permit transpiration. Mixed and applied in accordance with manufacturer's instructions.

Mulch: See plans for type of mulch to be used.
A. Hardwood: 6 month old well rotted double shredded native, DARK BROWN hardwood mulch not larger than 4" in length and 1/2" in width, free of wood chips and sawdust. Install minimum depth of 4".
B. River Rock: Rock type to be tan to yellow-brown washed river slicks, 5" - 8" in size. Install in location as shown on Landscape Plan an even depth of 8".

Water: Free of substances harmful to plant growth. Hoses or other methods of transportation furnished by Contractor.

Guying/Staking/Wire: No. 10 or 12 gage galvanized wire.
1. Turnbuckles: Galvanized steel of size and gage required to provide tensile strength equal to that of the wire. Turnbuckle openings shall be at least 3".

Staking and Guying Hose: New, Two ply, reinforced garden hose not less than 1/2" inside diameter. Green or black in color, all same color for the project.

Tree Wrap: Standard waterproofed tree wrapping paper, 2-1/2" wide, made of 2 layers of crepe Kraft paper weighing not less than 30 lbs. Per ream, cemented together with asphalt.

Twine: Two-ply jute material.

PART 3 - EXECUTION

INSPECTION

Examine proposed planting areas and conditions of installation. Do not start planting work until unsatisfactory conditions are corrected.

PREPARATION

Time of planting:

1. Evergreen material: Plant evergreen materials between August 15 and October 15 or in spring before new growth begins. If project requirements require planting at other times, plants shall be sprayed with anti-desiccant prior to planting operations.
2. Deciduous material: Plant deciduous materials April 1 to June 1 and August 15 to November 15. If deciduous trees are planted in-leaf, they shall be sprayed with an anti-desiccant prior to planting operation.
3. Planting times other than those indicated shall be acceptable to the Owner.

Planting shall be performed only by experienced workmen familiar with planting procedures under the supervision of a qualified supervisor.

Locate plants as indicated or as approved in the field after staking by the Contractor. **If obstructions are encountered that are not shown on the drawings, do not proceed with planting operations. Contact Landscape Architect to determine new location.**

Excavate circular plant pits with vertical sides, except for plants specifically indicated to be planted in beds. Provide shrub and tree pits as shown in tree and shrub planting details. Depth of pit shall accommodate the root system. Provide undisturbed sub grade to hold root ball at nursery grade as shown on the drawings. Root flare must be visible after planting.

Provide pre-mixed planting mixture for use around the balls and roots of the plants consisting of 50% excavated material and 50% topsoil mix. Add plant fertilizer per manufacturer's recommendation for each cu. yd. of mixture.

Provide pre-mixed ground cover bed planting mixture consisting of 4 parts screened topsoil to 1 part peat moss and plant fertilizer per manufacturer's recommendation for each cu. yd. of mixture.

Remove loose material and debris from base surface before placing landscape accessories.

Drainage Test

Randomly select a representative number of shrub plant pits in each shrub planting area and test for drainage prior to planting. Randomly select a representative number of tree plant pits and test for drainage prior to planting. Fill each selected plant pit with water and let stand for twenty-four (24) hours. Do not proceed with planting where drainage problems are apparent. Report to the Owner's Representative areas which do not drain within twenty-four (24) hours.

INSTALLATION

Set plant material in the planting pit to proper grade and alignment. Set plants upright, plumb, and faced to give the best appearance or relationship to each other or adjacent structure. Set plant material 2"-3" above the finish grade. No filling will be permitted around trunks or stems. Backfill the pit with topsoil mix and excavated material. Do not use frozen or muddy mixtures for backfilling. Form a ring of soil around the edge of each planting pit to retain water as shown in detail.

After balled and burlapped plants are set, muddle planting soil mixture around bases of balls and fill all voids.

1. Remove all burlap, ropes, and wires from the top 2/3 of the root ball.

Space ground cover plants in accordance with indicated dimensions. Adjust spacing as necessary to evenly fill planting bed with indicated quantity of plants. Plant to within 24" of the trunks of trees and shrubs within planting bed and to within 12" of edge of bed.

Mulching:

1. Mulch tree and shrub planting pits and shrub beds with required (see landscape plan) mulching material 4" deep immediately after planting. Thoroughly water mulched areas. After watering, rake mulch to provide a uniform finished surface.

Wrapping, guying, staking:

1. Inspect trees for injury to trunks, evidence of insect infestation, and improper pruning before wrapping.
2. Staking/Guying:
   a. Stake/guy all trees immediately after lawn sodding operations and prior to acceptance.
   b. Stake deciduous trees 3" caliper and less. Stake evergreen trees under 8'-0" tall.
   c. Guy deciduous trees over 3" caliper. Guy evergreen trees 8'-0" tall and over.
3. All work shall be acceptable to the Landscape Architect.

Pruning:

1. Prune branches of deciduous stock, after planting, to balance the loss of roots and preserve the natural character appropriate to the particular plant requirements. In general, remove 1/4 to 1/3 of the leaf bearing buds. Remove or cut back broken, damaged, and unsymmetrical growth of new wood.
2. Multiple leader plants: Preserve the leader which will best promote the symmetry of the plant. Cut branches flush with the trunk or main branch, at a point beyond a lateral shoot or bud a distance of not less than 1/2 the diameter of the supporting branch. Make cut on an angle.
3. Prune evergreens only to remove broken or damaged branches.

Decorative stone: (where indicated on landscape plan)

1. Install weed control barrier over sub-grade prior to installing stone. Lap 6" on all sides.
2. Place stone without damaging weed barrier.
3. Arrange stones for best appearance.

Metal edging: Locate to separate rock mulch from organinc mulch areas or where indicated on landscape plan.

1. Assemble to the lines and elevations indicated.
2. Assemble, align, bend and adjust the sections before back filling. Stake in place per manufacturer's recommendations to prevent frost movement. Readjust after fill is in place.
3. Set top flush with adjoining surfaces.

MAINTENANCE

The Contractor shall provide as a separate bid, maintenance for a period of ***1 year*** after final acceptance of the project landscaping. The Contractor must be able to provide continued maintenance if requested by the Owner or provide the name of a reputable landscape contractor who *can* provide maintenance.

Maintenance shall include mowing, fertilizing, mulching, pruning, cultivating, weeding, watering, and application of appropriate insecticides and fungicides necessary to maintain plants and lawns free of insects and disease.

1. Re-set settled plants to proper grade and position. Restore planting saucer and adjacent material and remove dead material.
2. Tighten and repair guy wires and stakes as required. Remove guy wires after one year. Guy straps are not to be too tight some slack is required.
3. Correct defective work as soon as possible after deficiencies become apparent and weather and season permit.
4. Water trees, plants and ground cover beds within the first 24 hours of initial planting, and not less than twice per week until final acceptance.

CLEANING

Perform cleaning during installation of the work and upon completion of the work. Remove from site all excess materials, soils, debris, and equipment. Repair damage resulting from planting operations.

NO.	DATE
PRELIMINARY TAC MEETING	10/08/2018
FINAL TAC MEETING	11/19/2018

REGISTERED LANDSCAPE ARCHITECT IRVING KING SUBRAHMANIAN LA0667024 STATE OF FLORIDA

THOMAS ENGINEERING GROUP
6300 NW 31ST AVE.
FORT LAUDERDALE, FL 33309
PH: (954) 202-7000
FX: (954) 202-7070
www.ThomasEngineeringGroup.com
FLORIDA BUSINESS LICENSE OF AUTH. No. 27335

THESE PLANS ARE SUBJECT TO FEDERAL COPYRIGHT LAWS. ANY USE OF SAME WITHOUT THE EXPRESS WRITTEN PERMISSION OF RACETRAC PETROLEUM, INC. IS PROHIBITED.

RACETRAC PETROLEUM, INC.
GRIFFIN ROAD & SW 40TH AVENUE
HOLLYWOOD, BROWARD COUNTY
FLORIDA 33312

STANDARD LANDSCAPE SPECS

RACETRAC MARKET

3990 GRIFFIN ROAD
Hollywood, Florida 33312

DATE	10/22/2018
SCALE	1" = 30'
DRAWN-BY	RJK
DRAWING NAME: LANDSCAPE PLAN	
L-1.2	1
SHEET NO.	VERSION

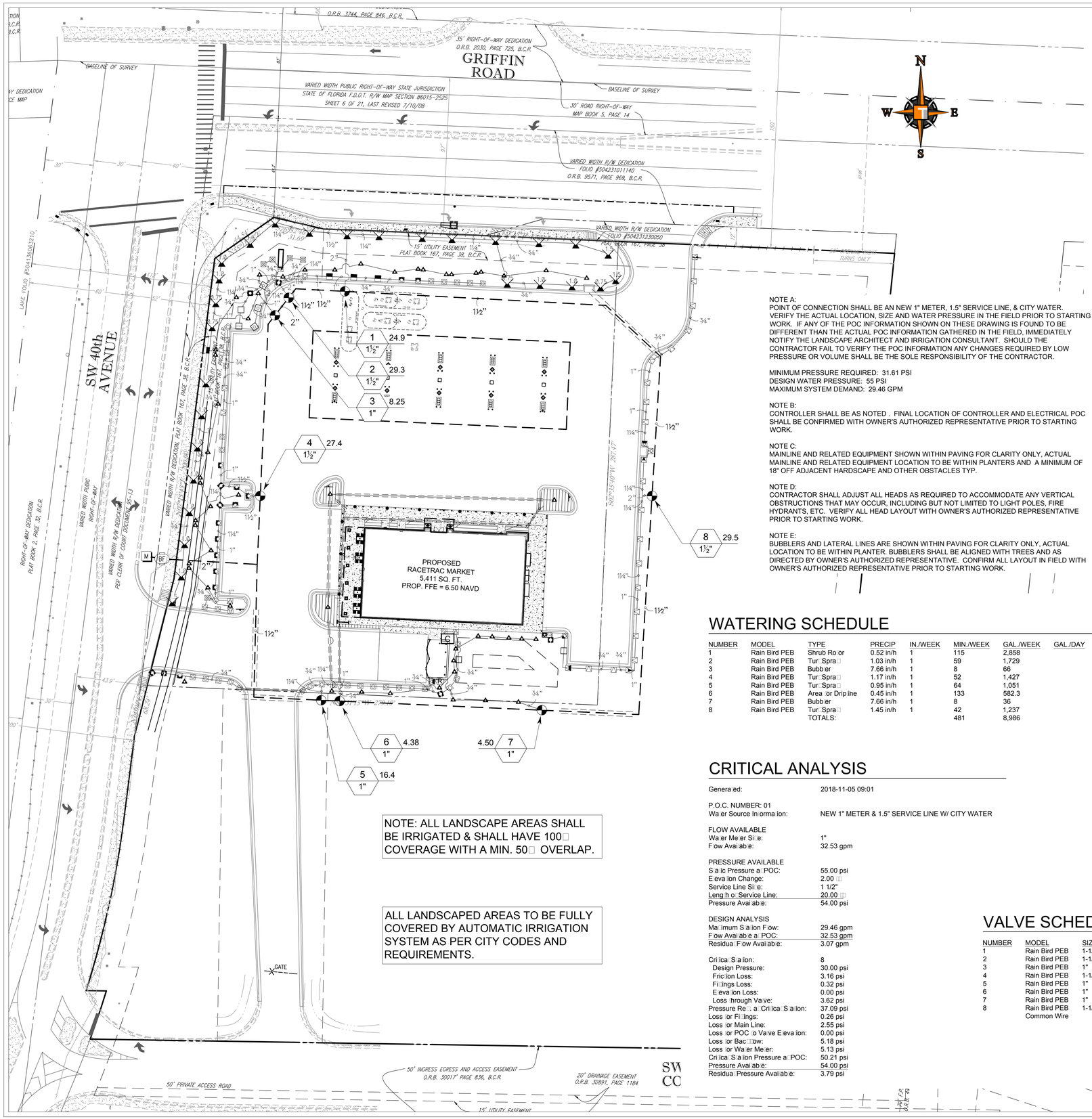

NOTE: ALL LANDSCAPE AREAS SHALL BE IRRIGATED & SHALL HAVE 100% COVERAGE WITH A MIN. 50% OVERLAP.

ALL LANDSCAPED AREAS TO BE FULLY COVERED BY AUTOMATIC IRRIGATION SYSTEM AS PER CITY CODES AND REQUIREMENTS.

NOTE A:
POINT OF CONNECTION SHALL BE AN NEW 1" METER, 1.5" SERVICE LINE, & CITY WATER. VERIFY THE ACTUAL LOCATION, SIZE AND WATER PRESSURE IN THE FIELD PRIOR TO STARTING WORK. IF ANY OF THE POC INFORMATION SHOWN ON THESE DRAWING IS FOUND TO BE DIFFERENT THAN THE ACTUAL POC INFORMATION GATHERED IN THE FIELD, IMMEDIATELY NOTIFY THE LANDSCAPE ARCHITECT AND IRRIGATION CONSULTANT. SHOULD THE CONTRACTOR FAIL TO VERIFY THE POC INFORMATION ANY CHANGES REQUIRED BY LOW PRESSURE OR VOLUME SHALL BE THE SOLE RESPONSIBILITY OF THE CONTRACTOR.

MINIMUM PRESSURE REQUIRED: 31.61 PSI
DESIGN WATER PRESSURE: 55 PSI
MAXIMUM SYSTEM DEMAND: 29.46 GPM

NOTE B:
CONTROLLER SHALL BE AS NOTED . FINAL LOCATION OF CONTROLLER AND ELECTRICAL POC SHALL BE CONFIRMED WITH OWNER'S AUTHORIZED REPRESENTATIVE PRIOR TO STARTING WORK.

NOTE C:
MAINLINE AND RELATED EQUIPMENT SHOWN WITHIN PAVING FOR CLARITY ONLY, ACTUAL MAINLINE AND RELATED EQUIPMENT LOCATION TO BE WITHIN PLANTERS AND A MINIMUM OF 18" OFF ADJACENT HARDSCAPE AND OTHER OBSTACLES TYP.

NOTE D:
CONTRACTOR SHALL ADJUST ALL HEADS AS REQUIRED TO ACCOMMODATE ANY VERTICAL OBSTRUCTIONS THAT MAY OCCUR, INCLUDING BUT NOT LIMITED TO LIGHT POLES, FIRE HYDRANTS, ETC. VERIFY ALL HEAD LAYOUT WITH OWNER'S AUTHORIZED REPRESENTATIVE PRIOR TO STARTING WORK.

NOTE E:
BUBBLERS AND LATERAL LINES ARE SHOWN WITHIN PAVING FOR CLARITY ONLY, ACTUAL LOCATION TO BE WITHIN PLANTER. BUBBLERS SHALL BE ALIGNED WITH TREES AND AS DIRECTED BY OWNER'S AUTHORIZED REPRESENTATIVE. CONFIRM ALL LAYOUT IN FIELD WITH OWNER'S AUTHORIZED REPRESENTATIVE PRIOR TO STARTING WORK.

WATERING SCHEDULE

NUMBER	MODEL	TYPE	PRECIP	IN./WEEK	MIN./WEEK	GAL./WEEK	GAL./DAY
1	Rain Bird PEB	Shrub Rotor	0.52 in/h	1	115	2,858	
2	Rain Bird PEB	Turf Spray	1.03 in/h	1	59	1,729	
3	Rain Bird PEB	Bubbler	7.66 in/h	1	8	66	
4	Rain Bird PEB	Turf Spray	1.17 in/h	1	52	1,427	
5	Rain Bird PEB	Turf Spray	0.95 in/h	1	64	1,051	
6	Rain Bird PEB	Area or Dripline	0.45 in/h	1	133	582.3	
7	Rain Bird PEB	Bubbler	7.66 in/h	1	8	36	
8	Rain Bird PEB	Turf Spray	1.45 in/h	1	42	1,237	
		TOTALS:			481	8,986	

CRITICAL ANALYSIS

Generated:	2018-11-05 09:01
P.O.C. NUMBER: 01	
Water Source Information:	NEW 1" METER & 1.5" SERVICE LINE W/ CITY WATER
FLOW AVAILABLE	
Water Meter Size:	1"
Flow Available:	32.53 gpm
PRESSURE AVAILABLE	
Static Pressure at POC:	55.00 psi
Elevation Change:	2.00 [illegible]
Service Line Size:	1 1/2"
Length of Service Line:	20.00 [illegible]
Pressure Available:	54.00 psi
DESIGN ANALYSIS	
Maximum Station Flow:	29.46 gpm
Flow Available at POC:	32.53 gpm
Residual Flow Available:	3.07 gpm
Critical Station:	8
Design Pressure:	30.00 psi
Friction Loss:	3.16 psi
Fittings Loss:	0.32 psi
Elevation Loss:	0.00 psi
Loss through Valve:	3.62 psi
Pressure Req. at Critical Station:	37.09 psi
Loss for Fittings:	0.26 psi
Loss for Main Line:	2.55 psi
Loss for POC to Valve Elevation:	0.00 psi
Loss for Backflow:	5.18 psi
Loss for Water Meter:	5.13 psi
Critical Station Pressure at POC:	50.21 psi
Pressure Available:	54.00 psi
Residual Pressure Available:	3.79 psi

IRRIGATION SCHEDULE

SYMBOL	MANUFACTURER/MODEL/DESCRIPTION	QTY	PSI
EST LCS RCS CST SST	Rain Bird 1806-PRS 15 Strip Series Turf Spray 6.0" Pop-Up Sprinkler with Co-Molded Wiper Seal Side and Bottom Inlet 1/2" NPT Female Threaded Inlet Pressure Regulating.	27	30
Q T H F	Rain Bird 1806-PRS 8 Series MPR Turf Spray 6.0" Pop-Up Sprinkler with Co-Molded Wiper Seal Side and Bottom Inlet 1/2" NPT Female Threaded Inlet Pressure Regulating.	29	30
SST	Rain Bird 1806-PRS 15 Strip Series Turf Spray 6.0" Pop-Up Sprinkler with Co-Molded Wiper Seal Side and Bottom Inlet 1/2" NPT Female Threaded Inlet Pressure Regulating.	4	30
Q T H F	Rain Bird 1806-PRS 10 Series MPR Turf Spray 6.0" Pop-Up Sprinkler with Co-Molded Wiper Seal Side and Bottom Inlet 1/2" NPT Female Threaded Inlet Pressure Regulating.	14	30
Q T H TQ F	Rain Bird 1806-PRS 12 Series MPR Turf Spray 6.0" Pop-Up Sprinkler with Co-Molded Wiper Seal Side and Bottom Inlet 1/2" NPT Female Threaded Inlet Pressure Regulating.	4	30
Q T H TQ F	Rain Bird 1806-PRS 15 Series MPR Turf Spray 6.0" Pop-Up Sprinkler with Co-Molded Wiper Seal Side and Bottom Inlet 1/2" NPT Female Threaded Inlet Pressure Regulating.	4	30
08HE-VAN 12HE-VAN 10HE-VAN 15HE-VAN	Rain Bird 1806-PRS ADJ Turf Spray 6.0" Pop-Up Sprinkler with Co-Molded Wiper Seal Side and Bottom Inlet 1/2" NPT Female Threaded Inlet Pressure Regulating.	16	30
1402 1406 1401 1404	Rain Bird 1804-1400 Flood Flood Bubbler 4" popup	52	40

SYMBOL	MANUFACTURER/MODEL/DESCRIPTION	QTY	PSI	GPM	RADIUS
0.75	Rain Bird 3500-S Shrub Rotor,adjustable and full circle	4	25	0.54	15'
1.0	Rain Bird 3500-S Shrub Rotor,adjustable and full circle	13	25	0.77	20'
1.5	Rain Bird 3500-S Shrub Rotor,adjustable and full circle	8	25	1.06	23'
2.0	Rain Bird 3500-S Shrub Rotor,adjustable and full circle	3	25	1.40	27'

SYMBOL	MANUFACTURER/MODEL/DESCRIPTION	QTY
	Area to Receive Dripline Netafim TLCV6-18(18) Landscape Dripperline with 0.6gph emitters at 18"o.c. (2.2 ph 0.45 m) with check valve, pressure compensation, 14.7psi min. to 50psi max. (1 to 3.5 bar). Dripperline areas spaced at 18" (0.46 m) apart, with emitters offset for triangular pattern.	958.2 s.f.

SYMBOL	MANUFACTURER/MODEL/DESCRIPTION	QTY
	Rain Bird PEB Electric Remote Control Valve	8
BF	Watts 007 2" max. flow rate is 7.5 gpm/s.	1
C	Rain Bird ESP8LXME-LXMM 8 Station Capable Commercial Controller. Mounted on a Powder-Coated Metal Cabinet Without Flow Sensing.	1
R	Rain Bird RSD-BE Rain Sensor, with bracket, extension wire	1
M	Water Meter 1" NEW 1" METER & 1.5" SERVICE LINE W/ CITY WATER	1
	Irrigation Lateral Line: Polyethylene and PVC Class 160 Polyethylene SDR-7 up to 1-1/4, then PVC Class 160 SDR 26 for 1-1/2" and larger. On lateral transition pipe sizes 3/4" and above are indicated on the plan, with all others being 1/2" in size.	3,045 LF
	Irrigation Mainline: Polyethylene and PVC Class 200	1,027 LF
	Pipe Sleeve: PVC Schedule 80 Typical pipe sleeve for irrigation pipe. Pipe sleeve size shall allow for irrigation piping and their related couplings to easily slide through sleeving material. Extend sleeves 18 inches beyond edges of paving or construction.	691.7 LF

Valve Callout
Valve Number
Valve Flow
Valve Size

VALVE SCHEDULE

NUMBER	MODEL	SIZE	TYPE	GPM	WIRE	FRICTION LOSS	VALVE LOSS	PSI	PSI @ POC	PRECIP
1	Rain Bird PEB	1-1/2"	Shrub Rotor	24.85	509.8	2.86	3.75	31.61	41.30	0.52 in/h
2	Rain Bird PEB	1-1/2"	Turf Spray	29.30	472.3	2.57	3.62	36.19	47.66	1.03 in/h
3	Rain Bird PEB	1"	Bubbler	8.25	458.4	3.92	1.77	45.69	49.77	7.66 in/h
4	Rain Bird PEB	1-1/2"	Turf Spray	27.44	345.0	2.13	3.68	35.81	45.94	1.17 in/h
5	Rain Bird PEB	1"	Turf Spray	16.42	178.4	2.61	2.51	35.11	41.33	0.95 in/h
6	Rain Bird PEB	1"	Area or Dripline	4.38	167.0	3.51	1.64	45.15	48.41	0.45 in/h
7	Rain Bird PEB	1"	Bubbler	4.50	167.0	2.05	1.65	43.70	46.99	7.66 in/h
8	Rain Bird PEB Common Wire	1-1/2"	Turf Spray	29.46	362.7 1,027	3.48	3.62	37.09	50.21	1.45 in/h

30 15 0 30 60 90 120
GRAPHIC SCALE IN FEET

DATE	DESCRIPTION
10/08/2018	PRELIMINARY TAC MEETING
11/19/2018	FINAL TAC MEETING

NO.

REGISTERED LANDSCAPE ARCHITECT JAMES KING SAHAKIMIAN LA0667024 STATE OF FLORIDA
FLORIDA BUSINESS LICENSE # 26 AUTH. No. 27539

THOMAS ENGINEERING GROUP
6300 NW 31ST AVE.
FORT LAUDERDALE, FL 33309
PH: (954) 202-7000
FX: (954) 202-7070
www.ThomasEngineeringGroup.com

THESE PLANS ARE SUBJECT TO FEDERAL COPYRIGHT LAWS. ANY USE OF SAME WITHOUT THE EXPRESS WRITTEN PERMISSION OF RACETRAC PETROLEUM, INC. IS PROHIBITED.

RACETRAC PETROLEUM, INC.
GRIFFIN ROAD & SW 40TH AVENUE
HOLLYWOOD, BROWARD COUNTY
FLORIDA 33312

IRRIGATION PLAN
RACETRAC MARKET
3990 GRIFFIN ROAD
Hollywood, Florida 33312

DATE	10/22/2018
SCALE	1" = 30'
DRAWN-BY	RJK
DRAWING NAME: IRRIGATION PLAN	
SHEET NO.	VERSION 1

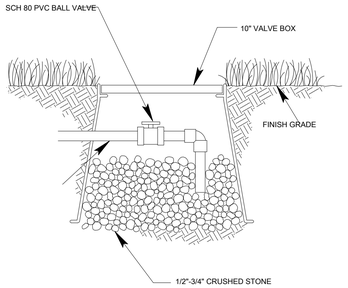

1 MANUAL DRAIN VALVE

NTS

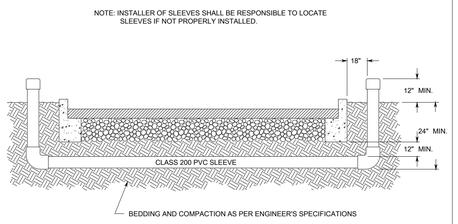

2 SLEEVING

NTS

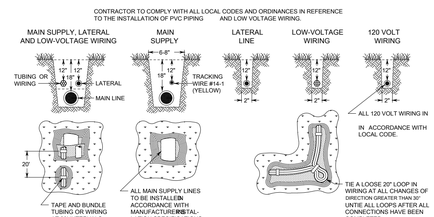

3 TRENCHING

NTS

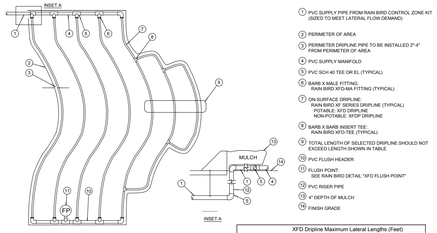

NOTES:
1. DISTANCE BETWEEN LATERAL ROWS AND EMITTER SPACING TO BE BASED ON SOIL TYPE, PLANT MATERIALS AND CHANGES IN ELEVATION. SEE INSTALLATION SPECIFICATIONS ON RAIN BIRD WEB SITE (WWW.RAINBIRD.COM) FOR SUGGESTED SPACING.
2. LENGTH OF LONGEST DRIPLINE LATERAL SHOULD NOT EXCEED THE MAXIMUM SPACING SHOWN IN THE ACCOMPANYING TABLE.
3. PLACE TIE DOWN STAKES EVERY THREE FEET IN SAND, FOUR FEET IN LOAM, AND FIVE FEET IN CLAY.
4. AT FITTINGS WHERE THERE IS A CHANGE OF DIRECTION SUCH AS TEES OR ELBOWS, USE TIE-DOWN STAKES ON EACH LEG OF THE CHANGE OF DIRECTION.

XFD Dripline Maximum Lateral Lengths (Feet)						
	12" Spacing		18" Spacing		24" Spacing	
PSI	0.6 GPH	0.9 GPH	0.6 GPH	0.9 GPH	0.6 GPH	0.9 GPH
15	273	195	314	250	424	322
20	318	169	353	294	508	368
30	360	230	413	350	586	414
40	399	255	465	402	652	474
50	417	285	528	420	720	488
60	460	290	596	455	780	512

WHEN USING 17MM INSERT FITTINGS WITH DESIGN PRESSURE OVER 50PSI, IT IS RECOMMENDED THAT STAINLESS STEEL CLAMPS BE INSTALLED ON EACH FITTING.

4 MANUAL DRAIN VALVE

NTS

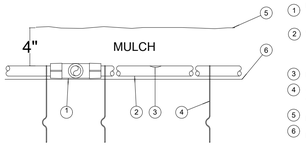

1. EASY FIT COMPRESSION TEE: RAIN BIRD MDCFTEE
2. ON-SURFACE DRIPLINE: RAIN BIRD XF SERIES DRIPLINE POTABLE: XFD DRIPLINE NON-POTABLE: XFDP DRIPLINE
3. INLINE DRIP EMITTER OUTLET
4. TIE DOWN STAKE: RAIN BIRD TDS-050 WITH BEND (TYPICAL)
5. MULCH
6. FINISH GRADE

NOTES:
1. PLACE TIE DOWN STAKES EVERY THREE FEET IN SAND, FOUR FEET IN LOAM, AND FIVE FEET IN CLAY.
2. AT FITTINGS WHERE THERE IS A CHANGE OF DIRECTION SUCH AS TEES OR ELBOWS, USE TIE-DOWN STAKES ON EACH LEG OF THE CHANGE OF DIRECTION.

5 LANDSCAPE DRIPLINE ON GRADE

NTS

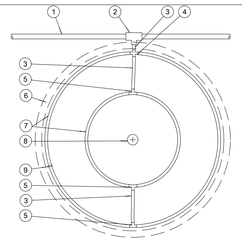

1. PVC DRIP MANIFOLD PIPE
2. PVC SCH 40 TEE OR EL
3. 1/2 POLYETHYLENE TUBING: RAIN BIRD XF SERIES BLANK TUBING
4. BARB CROSS INSERT FITTING: RAIN BIRD XFO-CROSS
5. BARB TEE INSERT FITTING: RAIN BIRD XFO-TEE
6. SHOVEL CUT BED EDGE
7. ON-SURFACE DRIPLINE: RAIN BIRD XF SERIES DRIPLINE POTABLE: XFD DRIPLINE NON-POTABLE: XFDP DRIPLINE PLACE AS SHOWN (LENGTH AS REQUIRED)
8. TREE TRUNK
9. TIE DOWN STAKE: RAIN BIRD TDS-050 WITH BEND (QUANTITY AS REQUIRED. SEE NOTES 2-3 BELOW)

NOTES: (THIS DETAIL IS FOR TREES LOCATED OUTSIDE OF PLANTING AREAS ONLY)
1. DISTANCE BETWEEN LATERAL RINGS AND EMITTER SPACING TO BE BASED ON SOIL TYPE, AND TREE CANOPY. SEE INSTALLATION SPECIFICATIONS ON RAIN BIRD WEB SITE (WWW.RAINBIRD.COM) FOR SUGGESTED SPACING.
2. PLACE TIE DOWN STAKES EVERY THREE FEET IN SAND, FOUR FEET IN LOAM, AND FIVE FEET IN CLAY.
3. AT FITTINGS WHERE THERE IS A CHANGE OF DIRECTION SUCH AS TEES OR ELBOWS, USE TIE-DOWN STAKES ON EACH LEG OF THE CHANGE OF DIRECTION.

6 DRIP LAYOUT AROUND TREES IN TURF AREA

NTS

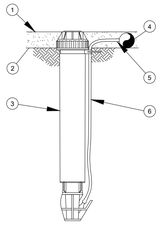

1. MULCH
2. FINISH GRADE
3. MICRO-SPRAY POP-UP: RAIN BIRD XERI-POP XP-600X WITH 4-VAN NOZZLE
4. ON-SURFACE DRIPLINE: RAIN BIRD XF SERIES DRIPLINE POTABLE: XFD SERIES NON-POTABLE: XFDP SERIES
5. ½" BARB TRANSFER FITTINGS: RAIN BIRD XBF1FDFCONN
6. ½" DISTRIBUTION TUBING: RAIN BIRD XQ TUBING (LENGTH AS REQUIRED)

NOTE:
1. USE XERIMAN TOOL XM-TOOL TO INSERT BARB TRANSFER FITTING DIRECTLY INTO DRIPLINE TUBING.
2. VAN NOZZLE MAY BE SET TO CLOSED, OR IF IT IS DESIRED TO SEE SPRAY FROM THE NOZZLE, SET THE ARC TO ½ PATTERN. THE FLOW FROM THE NOZZLE, 0.3 GPM, SHOULD BE ACCOUNTED FOR IN THE SYSTEM DESIGN.

7 DRIPLINE OPERATION INDICATOR

NTS

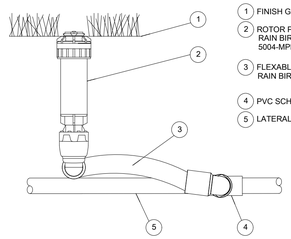

1. FINISH GRADE
2. ROTOR POP-UP SPRINKLER: RAIN BIRD 5004-MPR-25/30/35-Q/T/H/TT/TQ/F
3. FLEXABLE SWING ASSEMBLY: RAIN BIRD SPX-FLEX-100
4. PVC SCH 40 TEE OR ELL
5. LATERAL PIPE

8 ROTOR POP-UP SPRINKLER:5004-MPR NOZZLE

NTS

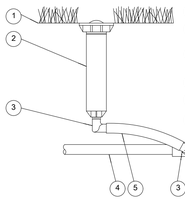

1. FINISH GRADE
2. POP-UP SPRAY SPRINKLER: RAIN BIRD 1806-PRS WITH RAIN BIRD ROTARY NOZZLE (AS INDICATED ON L-2.1)
3. 1/2-INCH MALE NPT x .490 INCH BARB ELBOW: RAIN BIRD MODEL SBE-050
4. PVC LATERAL PIPE
5. FLEXABLE SWING ASSEMBLY: RAIN BIRD MODEL SPX-FLEX-100
6. PVC SCH 40 TEE OR ELL

9 ROTORY NOZZLE: 1806 POP-UP SPRAY SPRINKLER

NTS

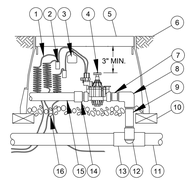

1. 30-INCH LINEAR LENGTH OF WIRE, COILED
2. WATERPROOF CONNECTION: RAIN BIRD SPLICE-1 (1 OF 2)
3. ID TAG: RAIN BIRD VID SERIES
4. REMOTE CONTROL VALVE: RAIN BIRD PGA
5. VALVE BOX WITH COVER: RAIN BIRD VB-STD
6. FINISH GRADE/TOP OF MULCH
7. PVC SCH 80 NIPPLE (CLOSE)
8. PVC SCH 40 ELL
9. PVC SCH 80 NIPPLE (LENGTH AS REQUIRED)
10. BRICK (1 OF 4)
11. PVC MAINLINE PIPE
12. SCH 80 NIPPLE (2-INCH LENGTH, HIDDEN) AND SCH 40 ELL
13. PVC SCH 40 TEE OR ELL
14. PVC SCH 40 MALE ADAPTER
15. PVC LATERAL PIPE
16. 3.0-INCH MINIMUM DEPTH OF 3/4-INCH WASHED GRAVEL

10 TURF VALVE PGA-PRS-D

NTS

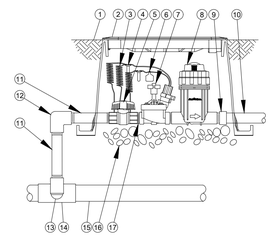

1. FINISH GRADE/TOP OF MULCH
2. VALVE BOX WITH COVER: RAIN BIRD VB-STD
3. 30-INCH LINEAR LENGTH OF WIRE, COILED
4. WATERPROOF CONNECTION: RAIN BIRD DB SERIES
5. 1-INCH BALL VALVE (INCLUDED IN XCZ-PRB-100-COM KIT)
6. ID TAG
7. REMOTE CONTROL VALVE: RAIN BIRD PESB (INCLUDED IN XCZ-PRB-100-COM KIT)
8. PRESSURE REGULATING QUICK CHECK BASKET FILTER: RAIN BIRD PRB-QKCHK-100 (INCLUDED IN XCZ-PRB-100-COM KIT)
9. PVC SCH 40 FEMALE ADAPTOR
10. LATERAL PIPE
11. PVC SCH 80 NIPPLE (LENGTH AS REQUIRED)
12. PVC SCH 40 ELL
13. PVC SCH 80 NIPPLE (2-INCH LENGTH, HIDDEN) AND PVC SCH 40 ELL
14. PVC SCH 40 TEE OR ELL
15. MAINLINE PIPE
16. 3-INCH MINIMUM DEPTH OF 3/4-INCH WASHED GRAVEL
17. PVC SCH 80 NIPPLE, CLOSE (INCLUDED IN XCZ-PRB-100-COM KIT)

11 DRIP VALVE:XCZ-PRB-100-B-COM

NTS

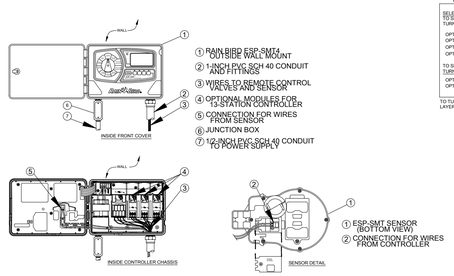

CHOOSING CONTROLLER FEATURES

SELECTING THE MODEL
TO SELECT THE DESIRED MODEL
TURN ON ONE OF THE FOLLOWING LAYERS:

OPTION-4-STATION
OPTION-7-STATION
OPTION-10-STATION
OPTION-13-STATION

TO SELECT "INDOOR" OR "OUTDOOR" OPTION,
TURN ON ONE OF THE FOLLOWING LAYERS

OPTION-INDOOR
OPTION-OUTDOOR

TO TURN OFF THIS INSTRUCTION BOX, TURN OFF LAYER "INSTRUCT-OPTION".

12 SMART CONTROLLER:ESP-SMT

NTS

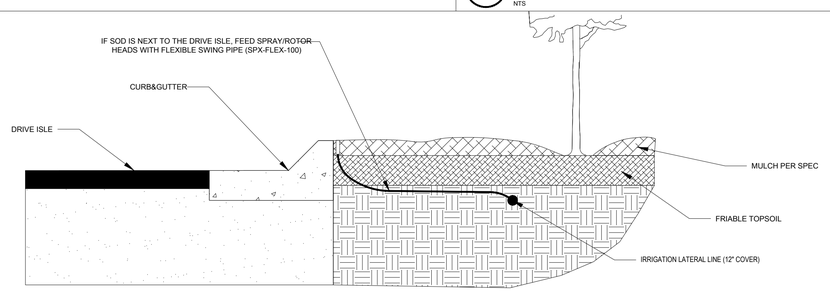

13 MAIN LINE/LATERAL LINE LOCATION ADJACENT TO DRIVE ISLE

NTS

IRRIGATION NOTES

1. ALL LOCAL MUNICIPAL AND STATE LAWS, RULES AND REGULATIONS GOVERNING OR RELATING TO ANY PORTION OF THIS WORK ARE HEREBY INCORPORATED INTO AND MADE A PART OF THESE SPECIFICATIONS AND THEIR PROVISIONS SHALL BE CARRIED OUT BY THE CONTRACTOR.
2. THE CONTRACTOR SHALL VERIFY THE LOCATIONS OF ALL EXISTING UTILITIES, STRUCTURES AND SERVICES BEFORE COMMENCING WORK. THE LOCATIONS OF UTILITIES, STRUCTURES AND SERVICES SHOWN IN THESE PLANS ARE APPROXIMATE ONLY. ANY DISCREPANCIES BETWEEN THESE PLANS AND ACTUAL FIELD CONDITIONS SHALL BE REPORTED TO THE OWNER'S REPRESENTATIVE.
3. THE CONTRACTOR SHALL OBTAIN THE PERTINENT ENGINEERING OR ARCHITECTURAL PLANS BEFORE BEGINNING WORK.
4. THE CONTRACTOR SHALL OBTAIN ALL NECESSARY PERMITS REQUIRED TO PERFORM THE WORK INDICATED HEREIN BEFORE BEGINNING WORK.
5. THIS DESIGN IS DIAGRAMMATIC. ALL EQUIPMENT SHOWN IN PAVED AREAS IS FOR DESIGN CLARITY ONLY AND IS TO BE INSTALLED WITHIN PLANTING AREAS.
6. THE CONTRACTOR SHALL NOT WILLFULLY INSTALL ANY EQUIPMENT AS SHOWN ON THE PLANS WHEN IT IS OBVIOUS IN THE FIELD THAT UNKNOWN CONDITIONS EXIST THAT WERE NOT EVIDENT AT THE TIME THESE PLANS WERE PREPARED. ANY SUCH CONDITIONS SHALL BE BROUGHT TO THE ATTENTION OF THE OWNER'S REPRESENTATIVE PRIOR TO ANY WORK OR THE IRRIGATION CONTRACTOR SHALL ASSUME ALL RESPONSIBILITY FOR ANY FIELD CHANGES DEEMED NECESSARY BY THE OWNER.
7. INSTALL ALL EQUIPMENT AS SHOWN IN THE DETAILS AND SPECIFICATIONS. CONTRACTOR SHALL BE RESPONSIBLE TO COMPLY WITH LOCAL CITY, COUNTY AND STATE REQUIREMENTS FOR BOTH EQUIPMENT AND INSTALLATION.
8. ACTUAL LOCATION FOR THE INSTALLATION OF THE BACKFLOW PREVENTER AND THE AUTOMATIC CONTROLLER IS TO BE DETERMINED IN THE FIELD BY THE OWNER'S AUTHORIZED REPRESENTATIVE.
9. CONTRACTOR IS TO PROVIDE AN ADDITIONAL PILOT WIRE FROM CONTROLLER ALONG ENTIRETY OF MAIN LINE TO THE LAST RCV ON EACH AND EVERY LEG OF MAIN LINE. LABEL SPARE WIRES AT BOTH ENDS.
10. ALL PIPE UNDER PAVED AREAS TO BE INSTALLED IN SLEEVING TWICE THE DIAMETER OF THE PIPE CARRIED. SEE LEGEND FOR TYPE. ALL WIRE UNDER PAVED AREAS TO BE INSTALLED IN A SCH. 40 SLEEVE THE SIZE REQUIRED TO EASILY PULL WIRE THROUGH. ALL SLEEVES TO BE INSTALLED WITH A MINIMUM DEPTH AS SHOWN ON THE SLEEVING DETAILS. SLEEVES TO EXTEND AT LEAST 12" PAST THE EDGE OF THE PAVING.
11. ALL QUICK COUPLER AND REMOTE CONTROL VALVES TO BE INSTALLED IN SHRUB OR GROUND COVER AREAS WHERE POSSIBLE. ALL QUICK COUPLER AND REMOTE CONTROL VALVES TO BE INSTALLED AS SHOWN ON THE INSTALLATION DETAILS. INSTALL ALL QUICK COUPLER AND REMOTE CONTROL VALVES WITHIN 18" OF HARDSCAPE.
12. ALL HEADS ARE TO BE INSTALLED WITH THE NOZZLE, SCREEN AND ARCS SHOWN ON THE PLANS. ALL HEADS ARE TO BE ADJUSTED TO PREVENT OVERSPRAY ONTO BUILDINGS, WALLS, FENCES AND HARDSCAPE. THIS INCLUDES, BUT NOT LIMITED TO, ADJUSTMENT OF DIFFUSER PIN OR ADJUSTMENT SCREW, REPLACEMENT OF PRESSURE COMPENSATING SCREENS, REPLACEMENT OF NOZZLES WITH MORE APPROPRIATE RADIUS UNITS AND THE REPLACEMENT OF NOZZLES WITH ADJUSTABLE ARC UNITS.
13. THE CONTRACTOR SHALL USE PROPER GROUNDING TECHNIQUES FOR GROUNDING THE CONTROLLER AND RELATED EQUIPMENT PER MANUFACTURERS SPECIFICATIONS. THOMAS ENGINEERING GROUP RECOMMENDS MEASURING FOR PROPER GROUND AT LEAST ONCE ANNUALLY, AND NECESSARY ADJUSTMENTS MADE TO COMPLY WITH MANUFACTURER SPECIFICATIONS.
14. CONTRACTOR TO RECERTIFY EXISTING PUMP AND PVB IF APPLICABLE.

DATE	
10/08/2018	PRELIMINARY TAC MEETING
11/19/2018	FINAL TAC MEETING

NO.	DATE

REGISTERED LANDSCAPE ARCHITECT
KING ESKANIMIAN
LA0667324
STATE OF FLORIDA
WWW.SITEWIZ.COM
FLORIDA BUSINESS LICENSE CERTIFICATE OF AUTH. No. 27328

THOMAS ENGINEERING GROUP
6300 NW 31ST AVE.
FORT LAUDERDALE, FL 33309
PH: (954) 202-7000
FX: (954) 202-7070
www.ThomasEngineeringGroup.com

THESE PLANS ARE SUBJECT TO FEDERAL COPYRIGHT LAWS: ANY USE OF SAME WITHOUT THE EXPRESS WRITTEN PERMISSION OF RACETRAC PETROLEUM, INC. IS PROHIBITED.

RACETRAC PETROLEUM, INC.
GRIFFIN ROAD & SW 40TH AVENUE
HOLLYWOOD, BROWARD COUNTY
FLORIDA 33312

IRRIGATION STANDARD DETAILS

RACETRAC MARKET

3990 GRIFFIN ROAD
Hollywood, Florida 33312

DATE	10/22/2018
SCALE	1" = 30'
DRAWN-BY	RJK
DRAWING NAME: IRRIGATION PLAN	
L-2.1	1
SHEET NO.	VERSION

IRRIGATION SPECIFICATIONS

PART 1 - GENERAL

DESCRIPTION

Provide a complete design and installation for an underground irrigation system as specified herein. The work includes:

1. The design of an underground irrigation system using irrigation industry best practices
2. Automatic irrigation system including piping, fittings, sprinkler heads, and accessories.
3. Pump (if necessary), valves, and fittings.
4. Irrigation Meter and reduced pressure backflow preventer. (Provided by the General Contractor)
5. Controller, control wire.
6. Testing.
7. Excavation and backfilling irrigation system work.
8. Associated interior and exterior plumbing, and accessories to complete the system.

Pipe sleeves are generally indicated to be supplied and installed by the General Contractor. The Irrigation Contractor shall coordinate with the General Contractor to ensure that sleeving is available in the preferred locations and that the irrigation site drawing reflects the actual installed locations of the sleeves. Sleeve locations are also shown on the Utility Plan by the Civil Engineer.

QUALITY ASSURANCE

Installer's qualifications: Minimum of 3 years experience installing irrigation systems of comparable size. All plumbing within the building shall be installed by a licensed plumber.

Materials, equipment, and methods of installation shall comply with the following codes and standards.

1. National Fire Protection Association, (NFPA): National Electrical Code.
2. American Society for Testing and Materials, (ASTM).
3. National Sanitation Foundation, (NSF).
4. The Irrigation Association, (IA).

The Irrigation Contractor shall coordinate with the sodding and landscape contractors to insure 100% irrigation coverage of all sod and plant material. The Contractor shall verify water pressure at the site. If pressure is below 40 psi, the Landscape Architect shall be notified immediately for a redesign. The final zone design flow and operating pressure shall guarantee 100% coverage for all sod and landscape areas.

SUBMITTALS

Upon irrigation system acceptance by Landscape Architect or RaceTrac Project Manager, submit manufacture's product manuals and any site specific operating and/or maintnenance instructions.

1. Provide one (1) copy of irrigation system as-built directly to the Landscape Architect and on site Project Manager. Legibly mark drawings to record actual construction, valve locations, zone/station numbering, main line locations, etc.
2. Provide all manufacturers manuals.

DELIVERY, STORAGE AND HANDLING

Deliver irrigation system components in manufacturer's original undamaged and unopened containers with labels intact and legible.

Protect existing trees, plants, lawns and other features designated to remain as part of the final landscape work.

Promptly repair damage to adjacent facilities caused by irrigation system work operations. Cost of repairs at Contractor's expense. Promptly notify the Landscape Architect of unexpected sub-surface conditions. Minor adjustments in system layout will be permitted to clear existing fixed obstructions. Final system layout shall be acceptable to the Landcape Architect.

CODES, INSPECTIONS AND PERMITS

The entire installation shall fully comply with all local and state laws and ordinances, and with all the established codes applicable thereto. The Contractor shall take out all required permits, arrange for all necessary inspections and shall pay any fees and expenses in conjunction with the same as a part of the work under this Section. If required, the Owner will provide the City and utility companies with a "Hold Harmless" agreement for sprinklers on public lands and easements.

GUARANTEE

For a period of one (1) year from date of final acceptance of work performed under this Section, the Contractor shall promptly furnish and install any and all parts and equipment which prove defective in material, workmanship or installation at no additional cost to the Owner.

PART 2 - PRODUCTS

ACCEPTABLE MANUFACTURERS

Manufacturers:
ONLY - Rain Bird, Contractor Division, Glendora, CA

MATERIALS

General:
1. Provide only new materials, without flaws or defects and of the highest quality of their specified class and kind.
2. Comply with pipe sizes indicated. No substitution of smaller pipes will be permitted. Remove damaged and defective pipe.
3. Provide pipe continuously and permanently marked with manufacturer's name or trademark, size schedule and type of pipe, working pressure at 73 degrees F. and National Sanitation Foundation (NSF) approval.
4. All materials subject to acceptance of the Landscape Architect and Owner.

Plastic pipe, fittings, and connections:
1. Polyvinyl chloride pipe: ASTM D2241, rigid, unplasticized PVC, extruded from virgin parent material. Provide pipe homogeneous throughout and free from visible cracks, holes, foreign materials, blisters, wrinkles and dents.
   a. SDR 21, Class 200.
2. Polyethylene pipe: ASTM D2239 flexible polyethylene pipe rated at 100 PSI minimum working pressure.
3. PVC pipe fittings: ASTM D2241 schedule 40 PVC molded fittings suitable for solvent weld, slip joint ring tight seal, or screwed connections. Fittings made of other materials are not permitted.
   a. Size slip fitting socket taper to permit a dry unsoftened pipe end to be inserted no more than halfway into the socket. Saddle and cross fittings are not permitted.
   b. Schedule 80 PVC pipe may be threaded.
   c. Use male adapters for plastic to metal connections. Hand tighten male adapters plus one turn with a strap wrench.
4. Insert fittings: ASTM D2466 insert type fittings.
5. Saddle tees for lateral lines:
   a. Kwik-seal saddle tee as manufactured by Dawn Industries, Inc. 4410 Washington Street, Denver, CO 80216, or approved equal.
   b. Brass Saddle with stainless steel screws.
6. Sprinkler Riser:
   a. Cut-off polyethylene riser mounted on saddle tees.
   b. Riser height as required.
7. Swing joints: See detail.

Interior copper pipe, fittings and connections:

1. Interior water piping, fittings and connectors: ASTM B88 Type "L" hard tempered copper tubing. Fittings shall be 150 pound working water pressure standard, solder end type, constructed of wrought copper, bronze or brass.
2. Joints made with tin-lead solder, approximately 95-5 composition. Thoroughly polish joints and use proper flux to provide sound joints.

Sprinkler heads, pumps, valves and associated equipment:

1. The following items are as specified on the Drawings unless noted otherwise.
   a. Spray type sprinkler heads, rotary type sprinkler heads
   b. Pressure compensating drip line
   c. Manual isolation valves - gate valve for lines 2" and under, mechanical lines for valves greater than 2"
   d. Electric remote control valves (ensure water tight connections)
   e. Quick couples valves - each with key having 3/4" male top pipe thread for hose connection
   f. Backflow preventer - comply with codes of local or county agency
   g. Pump if necessary
   h. Irrigation meter - comply with codes of local or county agency. (Provided by General Contractor)
   i. Mainline and associated lateral lines with sizes

Controls:

1. The following items are as specified on the Drawings unless noted otherwise.
   a. Controller as specified on the drawings.
   b. Pump starter (if necessary)

Electrical control wire:

1. Electrical control and ground wire: Type UF direct burial 600 volt AWG control cable #12 neutral and #14 control "hot" wire. No aluminum wire allowed.
2. Wire color code: Provide control or "hot" wires either black or red in color. Provide common or "ground wires" white in color.

ACCESSORIES

Drainage fill: 1/2" to 3/4" washed pea gravel.

Fill: Clean soil free of stones larger than 2" diameter foreign matter, organic material and debris.

1. Provide imported fill material as required to complete the work. Obtain rights and pay all costs for imported materials.
2. Suitable excavated materials removed to accommodate the irrigation system work may be used as fill material subject to the Landscape Architect's review and acceptance.

Clamps: Stainless steel, worm gear hose clamps with stainless steel screws or ear type clamps.

Low voltage wire connectors: Socket seal type wire connectors and 3M DBY Direct Bury Splice Kit.

Valve access boxes: Tapered enclosure of rigid plastic material comprised of fibrous components chemically inert and unaffected by moisture corrosion and temperature changes. Provide lid of same material, green in color.

1. 12" deep x 18" long x 13" wide base dimensions.
2. 9" deep x 10" diameter base dimension.

PART 3 - EXECUTION

INSPECTION

Examine final grades and installation conditions. Do not start irrigation system work until unsatisfactory conditions are corrected.

PREPARATION

Layout and stake the location of each pipe run and all sprinkler heads and sprinkler valves.

Coordinate with the General Contractor to expose the irrigation sleeves. Irrigation sleeves installed by the General Contractor.

INSTALLATION

General: Prior to any work, the Contractor will test the pressure and flow of the existing water line and make necessary adjustments to the system design.

Excavating and backfilling:

1. Excavation shall include all materials encountered, except materials that cannot be excavated by normal mechanical means.
   a. Rock excavation: Submit a unit cost per foot of trench for rock excavation. Include in price additional backfill materials required to replace excavated rock.
2. Excavate trenches of sufficient depth and width to permit proper handling and installation of pipe and fittings.
3. If the pulling method is used, the pipe "plow" shall be a vibratory type. Starting and finishing holes for pipe pulling shall not exceed a 1'-0" by 3'-0" opening.
4. Excavate to depths required to provide 2" depth of earth fill or sand bedding for piping when rock or other unsuitable bearing material is encountered.
5. Fill to match adjacent grade elevations with approved earth fill material. Place and compact fill in layers not greater than 8" depth.
   a. Provide approved earth fill or sand to a point 4" above the top of pipe.
   b. Fill to within 6" of final grade with approved excavated or borrow fill materials free of lumps or rocks larger than 3" in any dimension.
   c. Provide clean topsoil fill free of rocks and debris for top 6" of fill.
6. Except as indicated, install irrigation mains with a minimum cover of 18" based on finished grades. Install irrigation laterals with a minimum cover of 12" based on finished grades. In roadways or parking areas, minimum cover of 24" based on top of pavement.
7. Excavate trenches and install piping and fill during the same working day. Do not leave open trenches or partially filled trenches open overnight.

Plastic pipe:

1. Install plastic pipe in accordance with manufacturer's installation instructions. Provide for thermal expansion and contraction.
2. Saw cut plastic pipe. Use a square-in-sawing vice, to ensure a square cut. Remove burrs and shavings at cut ends prior to installation.
3. Make plastic to plastic joints with solvent weld joints to slip seal joints. Use only solvent recommended by the pipe manufacturer. Install plastic pipe fittings in accordance with pipe manufacturer's instructions. Contractor shall make arrangements with pipe manufacturer for all necessary field assistance.
4. Make plastic to metal joints with metal male adapters.
5. Make solvent weld joints in accordance with manufacturer's recommendations.
6. Allow joints to set at least 24 hours before pressure is applied to the system.
7. Uncoil poly-pipe and insert full depth. Secure poly-pipe to insert fittings with stainless steel clamps. Double clamp pipe 1" diameter or greater.
8. Maintain pipe interiors free of dirt and debris. Close open ends of pipe by acceptable methods when pipe installation is not in progress.

Sprinklers, fittings, valves and accessories:

1. Install fittings, valves, sprinkler heads, risers, and accessories in accordance with manufacturer's instructions, except as otherwise indicated.
   a. Provide concrete thrust blocks where required at fittings and valves.
2. Set sprinkler heads perpendicular to finished grades, except as otherwise indicated.
3. Install pop-up spray heads with polyethylene "cut-off" nipples.
4. Locate sprinkler heads to assure proper coverage of indicated areas. Do not exceed sprinkler head spacing distances indicated.
5. Install isolation ball valves in a 10" valve box according to the plans.
6. Install quick-coupling valves on an adjustable 360 degree swing joint riser assembly. Install quick-coupling valves in a 10" valve box according to the plans.
7. Install backflow prevention valve, pump, suction line, booster pump, fittings, and accessories as shown or required to complete the system.
8. Install controller.
   a. Located in back of store.
   b. Ground Controller in accordance with manufacturer's recommendations.
   c. Connect to 120v outlet on separate circuit.
9. Install in-ground control valves in a valve access box as indicated.
10. Install valve access boxes on a suitable base of gravel (minimum 4") to provide a level foundation at proper grade and to provide drainage of the access box.
11. Seal threaded connections on pressure side of control valves per manufacturer's recommendations.
12. Install self cleaning pressure compensating dripper line per manufacturer's recommendations (where specified). Provide all fittings, accessories, valves and filters for a finished, complete functioning system.
13. Install drip line where specified on finished grade in plant beds using Techline staples to hold in place, and cover with a 3" depth of specified mulch. Coordinate installation with shrub and groundcover placement.

Control wiring:

1. Install electric control cable in the piping trenches wherever possible. Place wire in trench adjacent to pipe. Install wire with slack to allow for thermal expansion and contraction. Expansion joints in wire may be provided at 200-foot intervals by making 5-6 turns of the wire around a piece of 1/2" pipe instead of slack. Where necessary to run wire in a separate trench, provide a minimum cover of 12".
2. Provide sufficient slack at site connections at remote control valves in control boxes, and at all wire splices to allow raising the valve bonnet or splice to the surface without disconnecting the wires when repair is required.
3. Connect each remote control valve to one station of a controller except as otherwise indicated.
4. Connect remote control valves to a common ground wire system independent of all other controllers.
5. Make wire connections to remote control electric valves and splices of wire in the field, using wire connectors and sealing cement in accordance with manufacturer's recommendations.
6. Provide tight joints to prevent leakage of water and corrosion build-up on the joint.
7. A separate common neutral wire is required from controller along entire mainline.
8. Provide one spare control wire from controller along entire mainline.

Interior plumbing:

1. Install piping to provide complete drainage of the system, toward the source wherever possible. Provide drain valves at all drainage points on pipes. Cut pipe accurately to measurements established at the building and installed without springing or forcing. After cutting and reaming, and before assembling, remove interior scale, dust and foreign matter. Installed pipe shall follow building lines, clearing all doors and other openings. No diagonal piping will be accepted. Install piping to allow installation of 1" thickness pipe installation covering. Provide for thermal expansion and contraction of pipe.
2. Insulate piping with 1" thickness of fibrous glass insulation, 35 degree service, with white Kraft paper jacket and .001" aluminum foil vapor barrier.
3. Stub-out from mechanical room floor to turf or planting area at 18" below finish grade and install a male pipe thread connection at the turf end.

Sleeves: *(TO BE INSTALLED BY GENERAL CONTRACTOR)*

1. Utilize existing sleeves for installation of the irrigation system.
2. Provide new sleeves for all locations where existing sleeves are not indicated. Install new sleeves prior to paving installation.
3. Install pipe sleeves under existing concrete or asphalt surface by jacking, boring or hydraulic driving of the sleeve. Obtain Owner's permission before cutting existing concrete and asphalt surfaces. Where piping is shown under paved areas which are adjacent to turf areas, install the piping in the turf areas.
4. Install permanent benchmark in the top of curbs and other hardscapes for reference of sleeve locations.

Flushing, testing and adjustment.

1. After sprinkler piping and risers are installed and before sprinkler heads are installed, open control valves and flush out the system with full head of water.
2. Perform system testing upon completion of each section. Make necessary repairs and re-test repaired sections as required.
3. Adjust sprinklers after installation for proper and adequate distribution of the water over the coverage pattern. Adjust for the proper arc of coverage.
4. Tighten nozzles on spray type sprinklers after installation. Adjust sprinkler adjusting screw on lateral line or circuit as required for proper radius. Interchange nozzles patterns as directed by the Landscape Architect, to give best arc of coverage.
5. Adjust all electric remote control valve pressure regulators and flow control stems for system balance and optimum performance.
6. Test and demonstrate the controller by operating appropriate day, hour and station selection features as required to automatically start and shut down irrigation cycles to accommodate plant requirements and weather conditions.

DISPOSAL OF WASTE MATERIAL

Stockpile, haul from site, and legally dispose of waste materials, including unsuitable excavated materials, rock, trash, and debris. Maintain disposal route clear, clean, and free of debris.

ACCEPTANCE

Test and demonstrate to the Landscape Architect and Owner the satisfactory operation of the system free of leaks. Instruct the Owner's designated personnel in the operation of the system, including adjustment of sprinklers, controller, valves and pump controls. Upon acceptance by Landscape Architect, the Owner will assume operation of the system.

CLEANING

Perform cleaning during installation of the work and upon completion of the work. Remove from site all excess materials, soil, debris, and equipment. Repair all damage resulting from irrigation system installation.

SPECIAL INSTRUCTIONS

The Contractor shall coordinate and cooperate with the Landscape Architect, General Contractor, Mechanical/Electrical Contractors, and all subcontractors, during the installation of this system. Installation of sleeves to be coordinated between the Irrigation Contractor and the General Contractor.

During the bidding period the Irrigation Contractor shall inform the RaceTrac Construction Manager of any system items or elements that are required for operation of the system specified herein, but installed or finished by others.

It is the intent and mandatory requirement that the irrigation system be installed and fully operational before planting operations begin. (Except for drip tubing which shall be installed after planting but prior to mulch installation.)

NO.	DATE
PRELIMINARY TAC MEETING	10/08/2018
FINAL TAC MEETING	11/19/2018

REGISTERED LANDSCAPE ARCHITECT
JAMES KING ESKANIMIAN
LA0667324
STATE OF FLORIDA
FLORIDA BUSINESS LICENSE LC-AUTH. No. 27328

THOMAS ENGINEERING GROUP
6300 NW 31ST AVE.
FORT LAUDERDALE, FL 33309
PH: (954) 202-7000
FX: (954) 202-7070
www.ThomasEngineeringGroup.com

THESE PLANS ARE SUBJECT TO FEDERAL COPYRIGHT LAWS. ANY USE OF SAME WITHOUT THE EXPRESSED WRITTEN PERMISSION OF RACETRAC PETROLEUM, INC. IS PROHIBITED.

RACETRAC PETROLEUM, INC.
GRIFFIN ROAD & SW 40TH AVENUE
HOLLYWOOD, BROWARD COUNTY
FLORIDA 33312

STANDARD LANDSCAPE SPECS

RACETRAC MARKET

3990 GRIFFIN ROAD
Hollywood, Florida 33312

DATE	10/22/2018
SCALE	1" = 30'
DRAWN-BY	RJK
DRAWING NAME: IRRIGATION PLAN	
L-2.2	1
SHEET NO.	VERSION

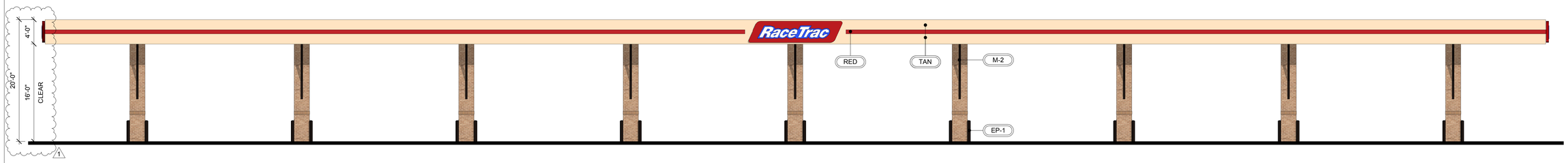

2 CANOPY FRONT ELEVATION
1/8" = 1'-0"

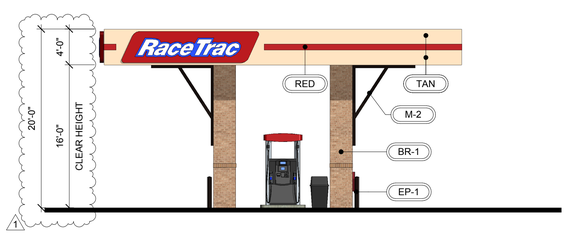

1 CANOPY ELEVATION
1/8" = 1'-0"

ID	MANUF.	MATERIAL	COMMENTS
FASCIA			
RED	-		REFER TO SPECIFICATION CHART ON SHEET C100
TAN			REFER TO SPECIFICATION CHART ON SHEET C100
WHITE	-		8" WHITE STRIPE
METAL			
M-2		COLOR DARK BRONZE.	METAL TO MATCH STOREFRONT COLOR DARK BRONZE
PAINT			
EP-1	SHERWIN WILLIAMS	EXTERIOR PAINT TO SW #7020 "BLACK FOX"	

STANDARD CANOPY FASCIA COLOR SPECIFICATION CHART

COLOR CALLOUT	CANOPY MANUFACTURER	STANDARD COLOR SPECIFICATION
"TAN"	LANE CANOPIES	ETT TAN FASCIA
	McGEE CANOPIES	ETT TAN FASCIA
	MADISON CANOPIES	PUEBLO TAN FASCIA
"RED"	LANE CANOPIES	TRD RED FASCIA
	McGEE CANOPIES	TRD RED FASCIA - PROGRAM RED
	MADISON CANOPIES	PROGRAM RED FASCIA

RaceTrac

COPYRIGHT NOTICE
THESE PLANS ARE SUBJECT TO FEDERAL COPYRIGHT LAWS: ANY USE OF SAME WITHOUT THE EXPRESSED WRITTEN PERMISSION OF RACETRAC PETROLEUM, INC. IS PROHIBITED. 2016 RACETRAC PETROLEUM INC.

DESIGN PROFESSIONALS

HILLFOLEYROSSI & ASSOCIATES
ARCHITECTURE
ENGINEERING
3680 Pleasant Hill Road
Suite 200
Duluth, Georgia 30096
p 770.622.9858
f 770.622.9535
www.hillfoleyrossi.com

© Copyright (as dated below).
This drawing and all reproductions thereof are the property of Hill Foley Rossi & Associates, LLC.(HFR). It is intended for the sole use of the project named hereon. Reproduction without the written consent of HFR is unlawful. All copies are to be returned to HFR upon project completion.

ISSUE/REVISION RECORD

DATE	DESCRIPTION
09/14/18	PRELIMINARY SUBMITTAL
10/24/18	PRELIMINARY COMMENTS

RaceTrac

RACETRAC PETROLEUM, INC.
200 GALLERIA PARKWAY SOUTHEAST
SUITE 900
ATLANTA, GEORGIA 30339
(770) 431-7600

PROJECT NAME

GRIFFIN & 40TH RACETRAC MARKET

FLORIDA
3990 GRIFFIN ROAD
HOLLYWOOD, FL

RACETRAC STORE NUMBER

#1365

PROTOTYPE SERIES 5.5K 2.0

2018 RH EX

PLAN MODIFICATION NOTICE

SPB NO. - DATE -

STANDARD PLAN BULLETINS (SPB) MODIFY THE PROTOTYPE SERIES SET NOTED ABOVE. THE LISTED SPB REPRESENTS THE LATEST MODIFICATION INCORPORATED TO THIS PROTOTYPE SERIES SET AT ORIGINAL RELEASE. THE ISSUE/ REVISION RECORD COLUMN ABOVE LISTS ANY REVISIONS OR SPB INCORPORATED IN THIS SET AFTER THE ORIGINAL RELEASE. CONTACT RACETRAC ENGINEERING AND CONSTRUCTION FOR ANY SUBSEQUENT BULLETINS NOT INCORPORATED HEREIN.

PROFESSIONAL SEAL

STATE OF FLORIDA
JEFFREY T. HILL
AR 0017608
REGISTERED ARCHITECT
10/24/18

PROJECT NUMBER
18.719

SHEET TITLE

FUEL CANOPY ELEVATIONS

SHEET NUMBER

C100

PRELIMINARY DRAWING