ATTACHMENT C

Permit History

NAME OF OWNER Mr & Mrs W.A. [illegible] ADDRESS OF CONSTRUCTION [illegible] Jackson St.

LEGAL DESCRIPTION Lot 17, Bl. 89, Pomona

FL-15 (FILM #1624)

Owner's Present Address

Description of Construction Cost 8,000.

Single Family Res.

Permit Type	No.	Date Issued	To Whom	Fixtures or Outlets
Bldg.	19333	1-6-53	Owner	
Electrical	12050	1-15-53	[illegible]	1-1-[illegible]
Plumbing	8419	1-16-53	[illegible]	5 -
Gas				

INSPECTIONS

FOUNDATION 1-13-53	1st Rough Plg. 1-19-53	Temp. Service [illegible] 1-15-53
COLUMNS	Final Rough Plg. 2-5-53	Rough Electric 2-6-53
TIE BEAM 1-[illegible]-53	Septic Tank 2-27-53	Temporary Final
ROOF	Grease Trap	Final Electric 2-23-53
	Final Plumbing 2-27-53	
GAS	Cert. of Occupancy	Rubbish Bond

Remarks: [illegible]

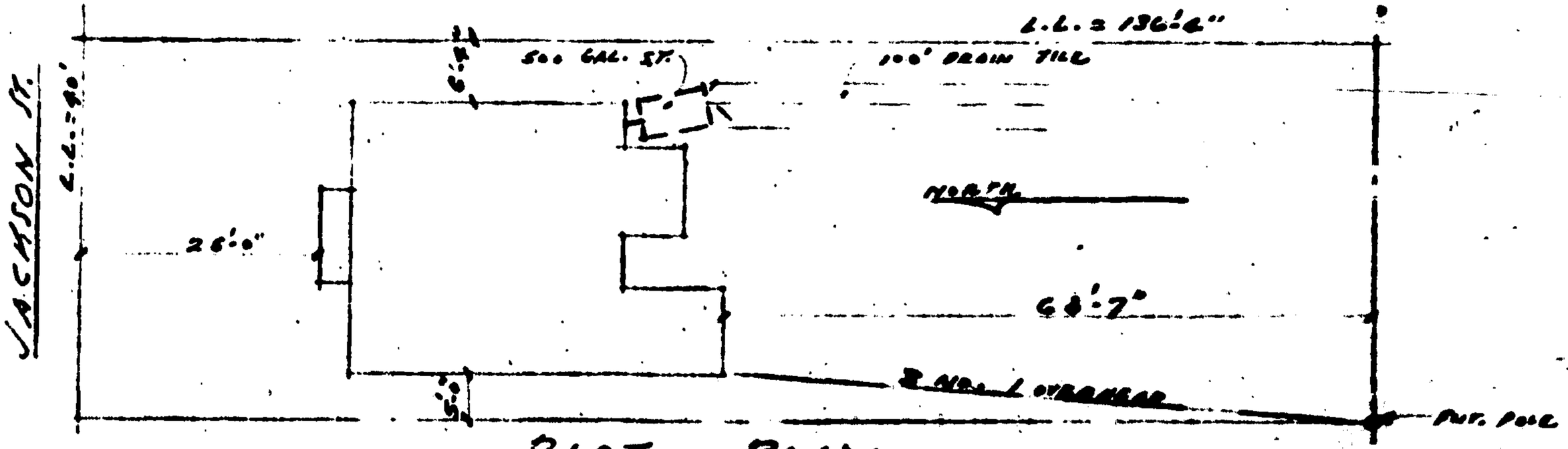

PLOT PLAN
Scale 1/16" = 1'-0

ELEC. NOTES:—
MAIN SERVICE 3 NO 4 OVERHEAD TO 1" conduit
CIR NO 1 - 3 NO 8 WIRES.
CIR NO. 2 - 2 NO. 10 WIRES.
CIR NOS. 3, 4, 5 - 2 NO 12 WIRES
CIR NOS. 6, 7, 8, 9 - 2 NO. 14 WIRES

DOOR SCHEDU			
NO.	MARK	SIZE	
1	100	3/0 x 6/8 x 1 3/8"	GL
1	200	2/6 x 6/8 x 1 3/8"	GL
4	300	3/6 x 6/8 x 1 3/8"	F
2	400	2/0 x 6/8 x 1 3/8"	
2	500	1/6 x 6/8 x 1 3/8"	LO
4	600	2/0 x 6/8 x 1 3/8"	LO

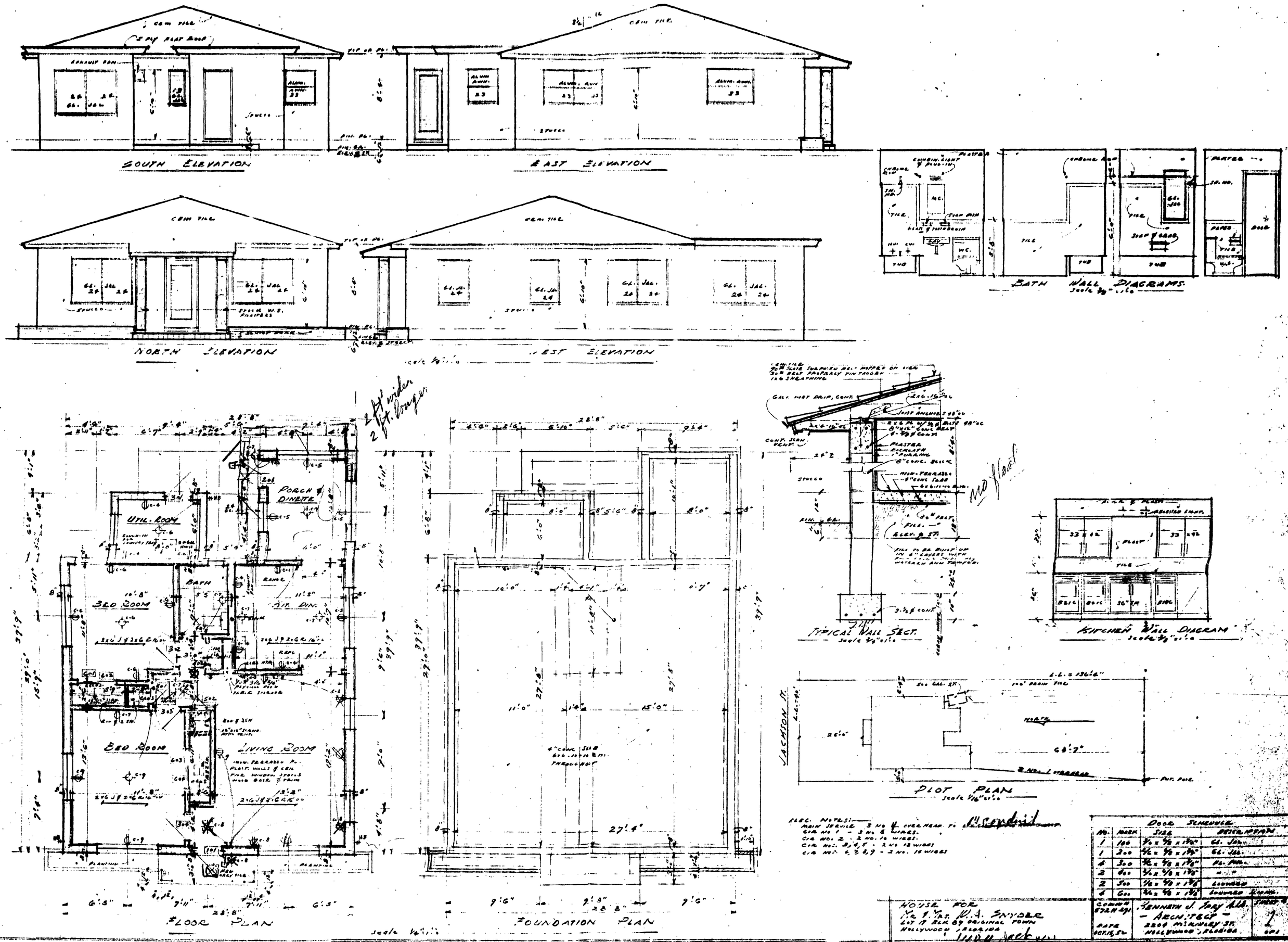
SOUTH ELEVATION
EAST ELEVATION
NORTH ELEVATION
WEST ELEVATION
BATH WALL DIAGRAMS
FLOOR PLAN
FOUNDATION PLAN
TYPICAL WALL SECT.
KITCHEN WALL DIAGRAM
PLOT PLAN
JACKSON ST.
UTIL. ROOM
PORCH & DINETTE
BED ROOM
BATH
KIT. DIN.
LIVING ROOM
2 ft. wider
2 ft. longer
No Float
ELEC. NOTES:
MAIN SERVICE 3 NO 4 OVERHEAD TO 1" conduit
CIR NO 1 - 3 NO 8 WIRES.
CIR NO. 2 - 2 NO. 10 WIRES.
CIR NO. 3, 4, 5 - 2 NO 12 WIRES
CIR NO. 6, 7, 8, 9 - 2 NO. 14 WIRES
DOOR SCHEDULE
NO. MARK SIZE DESCRIPTION
1 100 3/0 x 6/8 x 1 3/8" GL. JAL.
1 200 2/6 x 6/8 x 1 3/8" GL. JAL.
4 300 2/6 x 6/8 x 1 3/8" FL. PNL.
2 400 2/6 x 6/8 x 1 3/8" " "
2 500 1/6 x 6/8 x 1 3/8" LOUVRED
4 600 2/6 x 6/8 x 1 3/8" LOUVRED SLIDING
HOUSE FOR
Mr. & Mrs. W. A. SNYDER
LOT 17 BLK 89 ORIGINAL TOWN
HOLLYWOOD, FLORIDA
COMMON 572 N 291
DATE OCT. 15, 52
KENNETH J. SPRY A.I.A.
- ARCHITECT -
2204 McKINLEY ST.
HOLLYWOOD, FLORIDA
SHEET 2 OF 1

2 Ft. wider
2 Ft. longer

PORCH
DINETTE

UTIL. ROOM

BATH

RANGE

BED ROOM

LIV. RM.

LIVING ROOM

PLANTING

PLANTING

FLOOR PLAN

scale

2 Ft. wider
2 Ft. longer

28'-8"
4'-6" 2'-6" 6'-10" 5'-6" 9'-4"
8"
5'-11" 9'-1"
10'-1"
8" 8'-0" 8"-5'-6" 8" 8'-0" 8"
6'-0"
10'-0"
10'-0" 1'-4" 4'-1" 1'-4" 6'-7"
10'-8"
9'-6" 39'-9" 29'-0" 39'-9" 39'-9"
11'-0" 1'-4" 45'-0"
27'-0"
2'-0"
4" CONC. SLAB
6x6 - 10 + 10 REIN.
THROUGHOUT
1'-9"
8"
27'-4"
9'-6" 9'-9" 9'-6"
28'-8"

FOUNDATION PLAN

scale 1/4" = 1'-0"

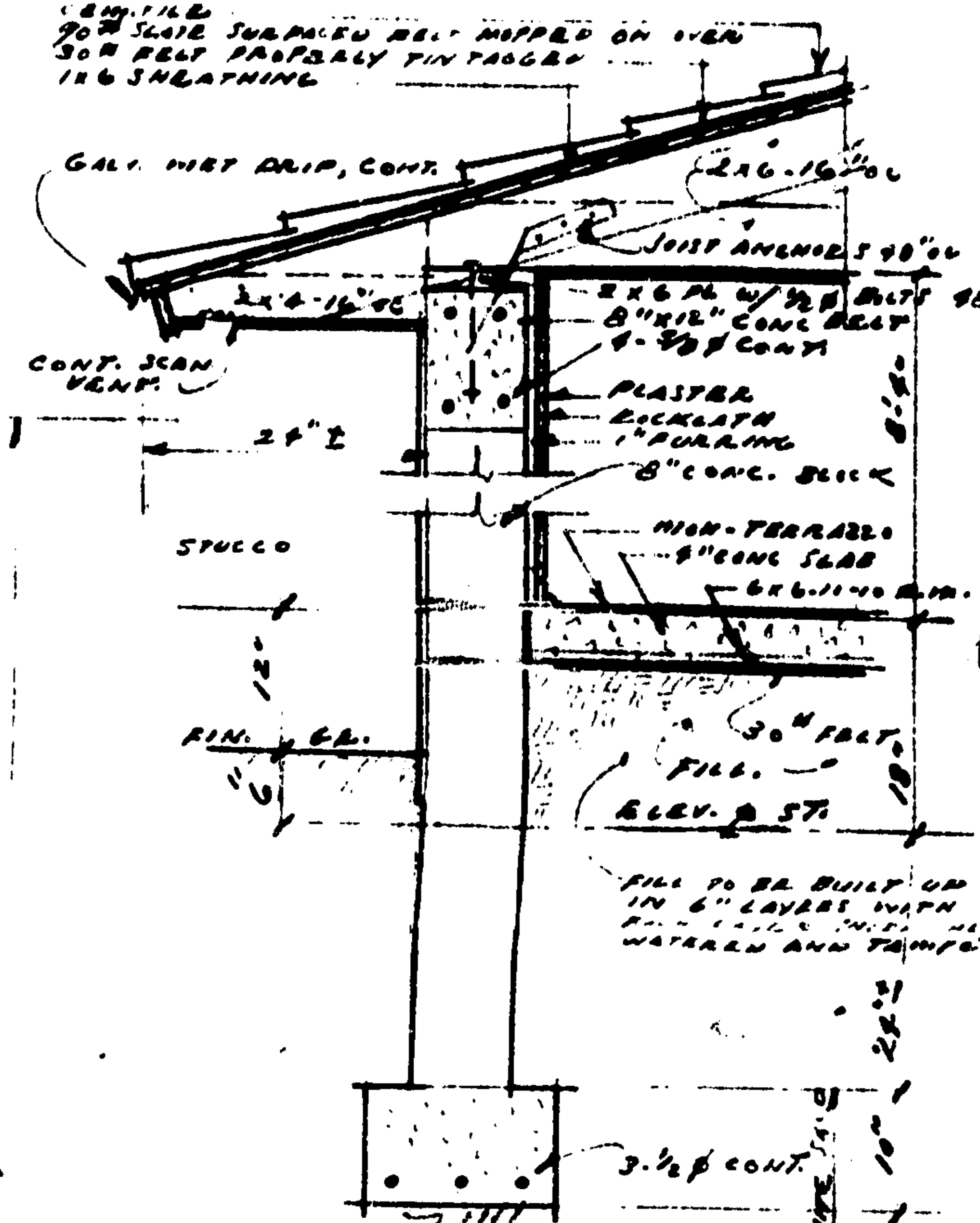

TYPICAL WALL SECT.

SCALE 1/2" = 1'-0

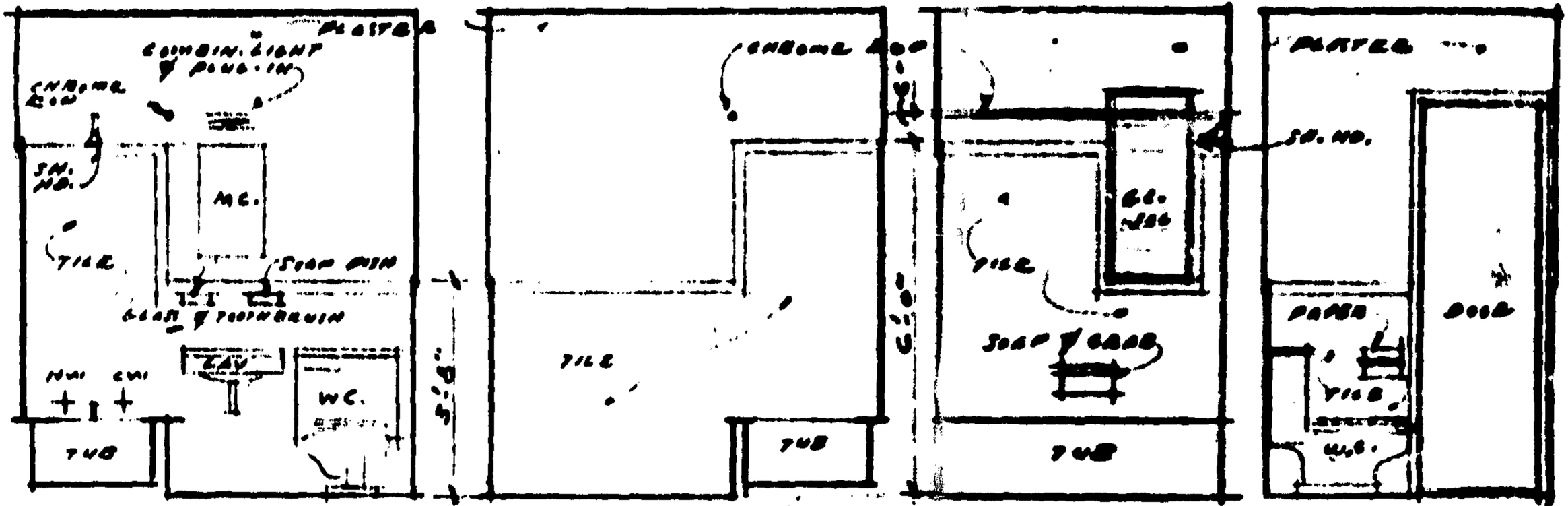

BATH WALL DIAGRAMS.
Scale 3/4" = 1'-0"

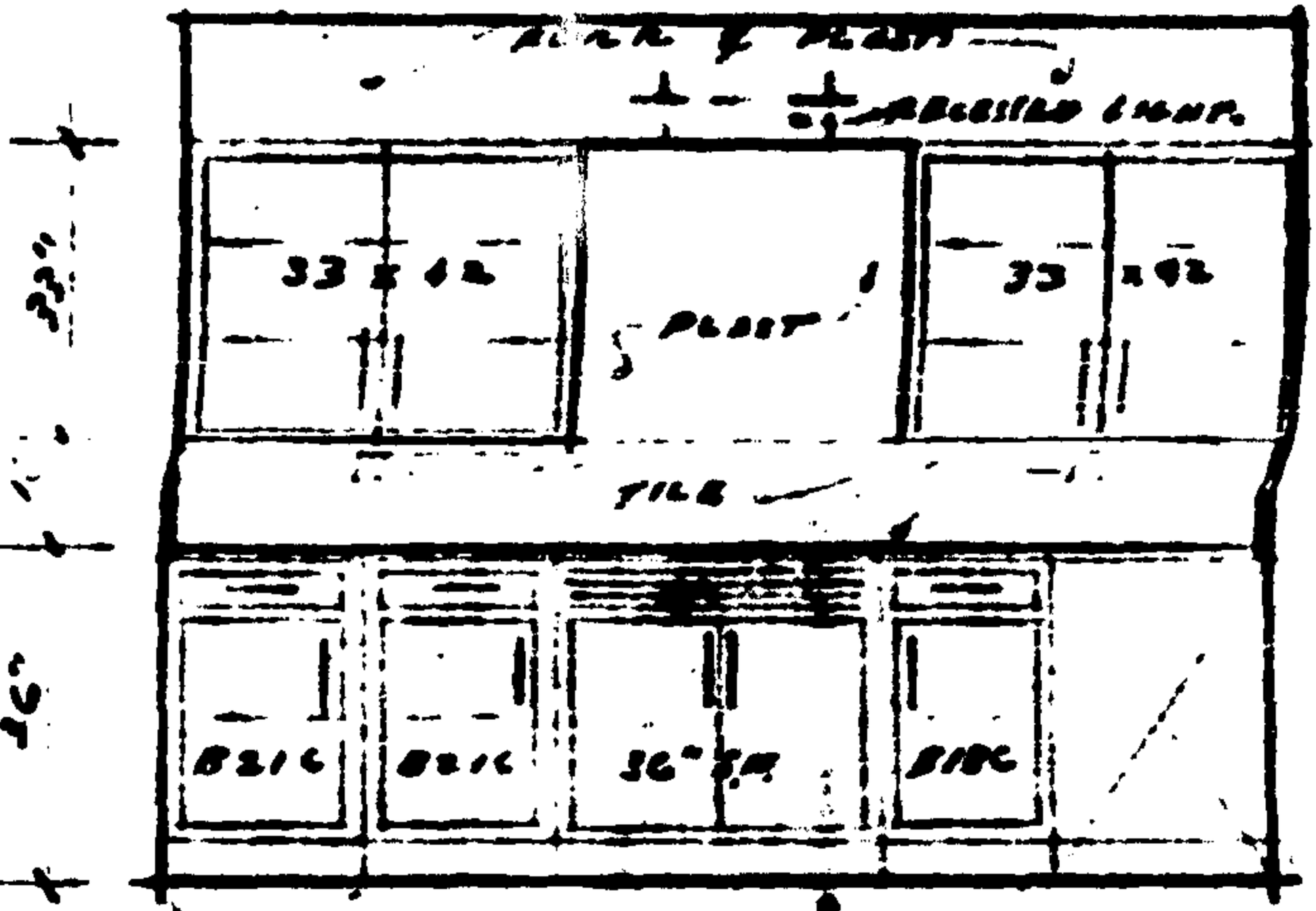

KITCHEN WALL DIAGRAM

SCALE 3/4" = 1'-0"

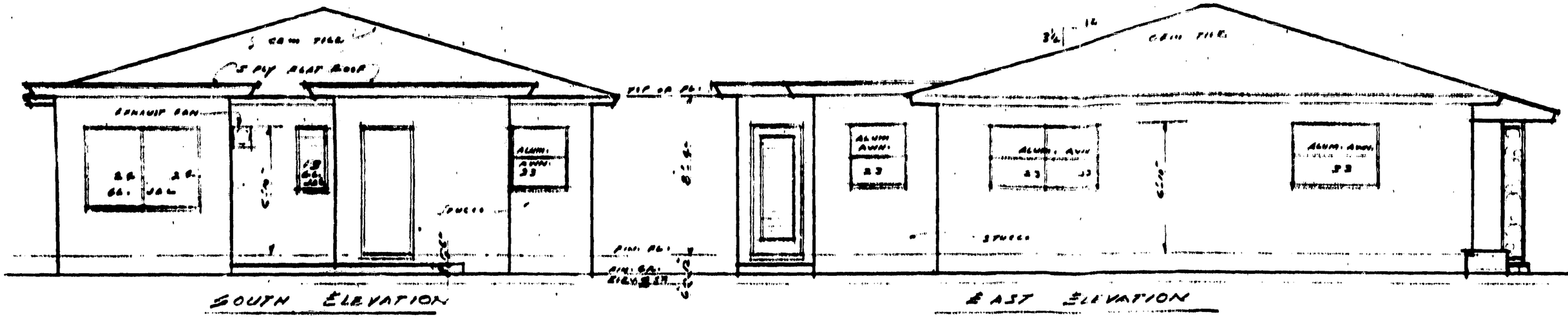

SOUTH ELEVATION

EAST ELEVATION

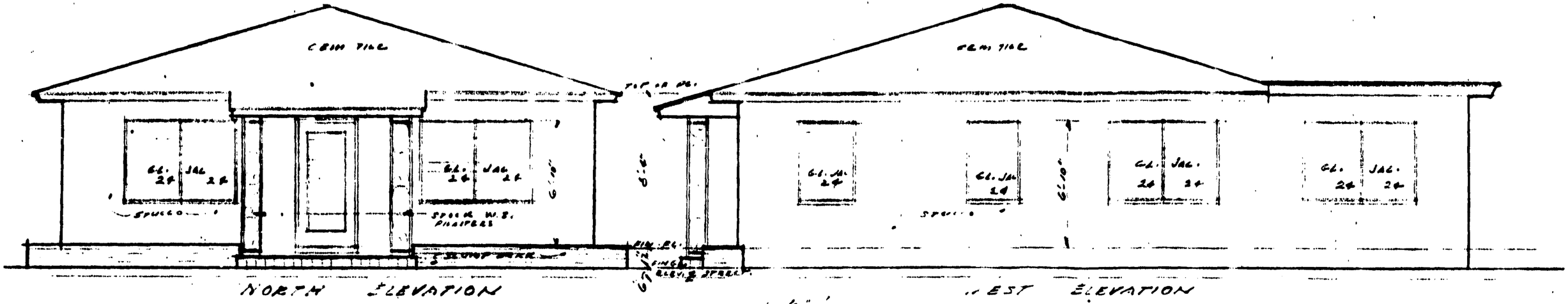

NORTH ELEVATION

WEST ELEVATION

CEM TILE
30# SLATE SURFACED BELT HOP
30# BELT PROPERLY TIN TAG
1/2 SHEATHING

JOB CARD

OWNER	JOB ADDRESS
GREGG HORTON	1404 Jackson St.

LEGAL DESCRIPTION	LOT NUMBER	BLOCK	SUBDIVISION OR ADDITION

PLOT/FILM NO.	ARCHITECT	FEE	VALUATION
		$ 10.00	$ 300

DESCRIPTION OF CONSTRUCTION: 44' of 48" hi C/L Fence

☐ SEPTIC TANK
☐ SEWER TAP

TYPE PERMIT	NUMBER	DATE	CONTRACTOR	TYPE PERMIT	NUMBER	DATE	CONTRACTOR
BUILDING				SEPTIC/SEWER			
ROOF				AIR/CONDITION			
ELECTRIC-BASIC				MECHANICAL			
ELECTRIC-SUPP.				SCREEN			
PLUMBING NO. FIX.				POOL			
L-P-DRY WALL				DRIVEWAY			
FENCE	52304	1/31/79	C D Stroud	PATIO or MMK			

NOTES: County Surcharge $.11

JOB CARD

OWNER	JOB ADDRESS
Horton	1404 Jackson Street

LEGAL DESCRIPTION	LOT NUMBER	BLOCK	SUBDIVISION OR ADDITION

MICROFILM NO.	ARCHITECT	FEE	VALUATION
		$ 12.00	$ 300

DESCRIPTION OF CONSTRUCTION
fumigation

☐ SEPTIC TANK
☐ SEWER TAP

TYPE PERMIT	NUMBER	DATE	CONTRACTOR	TYPE PERMIT	NUMBER	DATE	CONTRACTOR
BUILDING	54540	5/29/79	B.I.P.S.	SEPTIC/SEWER			
ROOF				AIR/CONDITION			
ELECTRIC-BASIC				MECHANICAL			
ELECTRIC-SUPP.				SCREEN			
PLUMBING NO. FIX.				POOL			
L-[illegible]-DRY WALL				DRIVEWAY			
FENCE				PATIO or WALK			

NOTES;

JOB CARD

OWNER	JOB ADDRESS
HORTON	1404 Jackson St.

LEGAL DESCRIPTION	LOT NUMBER	BLOCK	SUBDIVISION OR ADDITION

MICROFILM NO.	ARCHITECT	FEE	VALUATION
		$ 8.80	$

DESCRIPTION OF CONSTRUCTION

Serv. Change & Outlets

☐ SEPTIC TANK
☐ SEWER TAP

TYPE PERMIT	NUMBER	DATE	CONTRACTOR	TYPE PERMIT	NUMBER	DATE	CONTRACTOR
BUILDING				SEPTIC/SEWER			
ROOF				AIR/CONDITION			
ELECTRIC-BASIC	14683	10/14/77	Addison Elect	MECHANICAL			
ELECTRIC-SUPP.				SCREEN			
PLUMBING NO. FIX.				POOL			
L-P. DRY WALL				DRIVEWAY			
FENCE				PATIO or WALK			

NOTES;

JOB CARD

OWNER	JOB ADDRESS
HEIMS FLA. REALTY	1404 JACKSON ST.

LEGAL DESCRIPTION	LOT NUMBER	BLOCK	SUBDIVISION OR ADDITION
	17	89	ORIG. HND.

MICROFILM NO.	ARCHITECT	FEE	VALUATION
		$ 7.00	$ 975.

DESCRIPTION OF CONSTRUCTION

RZROOF - ASBESTOS - FLAT

☐ SEPTIC TANK
☐ SEWER TAP

TYPE PERMIT	NUMBER	DATE	CONTRACTOR	TYPE PERMIT	NUMBER	DATE	CONTRACTOR
BUILDING				SEPTIC/SEWER			
ROOF RRR	64374	9/24/80	E.P. & R. C.	AIR/CONDITION.			
ELECTRIC-BASIC				MECHANICAL			
ELECTRIC-SUPP.				SCREEN			
PLUMBING NO. FIX.				POOL			
L-P-DRY WALL				DRIVEWAY			
FENCE				PATIO or WALK			

NOTES:

COUNTY SURCHARGE FEE $.35

JOB CARD

OWNER	JOB ADDRESS
D. HORTON	1404 Jackson St.

LEGAL DESCRIPTION	LOT NUMBER	BLOCK	SUBDIVISION OR ADDITION

MICROFILM NO.	ARCHITECT	FEE	VALUATION
		$ 10.00	$ 225

DESCRIPTION OF CONSTRUCTION: 32' of 4' hi C/L Fence

☐ SEPTIC TANK
☒ SEWER TAP

TYPE PERMIT	NUMBER	DATE	CONTRACTOR	TYPE PERMIT	NUMBER	DATE	CONTRACTOR
BUILDING				SEPTIC/SEWER			
ROOF				AIR/CONDITION			
ELECTRIC-BASIC				MECHANICAL			
ELECTRIC-SUPP.				SCREEN			
PLUMBING NO. FIX.				POOL			
L-P-DRY WALL				DRIVEWAY			
FENCE	52361	2/5/79	Clark Sales	PATIO or WALK			

NOTES: County Surcharge $.07

39 permits were found for
1404 JACKSON ST

	Process #	Permit #	Description	Appl. Date	Permit Date
Details		B21-105214	LANDSCAPING - TREE REMOVAL	7/22/2021	
Details		B20-105887	ALT- INTERIOR RESIDENTIAL	9/15/2020	
Details		B09-102851	ROOFING - NEW - TILE	7/16/2009	7/16/2009
Details		B09-102196	REROOF - METAL, TILE, WOOD, SHINGLE OR SHAKE	6/4/2009	
Details		E09-100735	LOW VOLTAGE (CABLE TELEVISION)	5/21/2009	5/21/2009
Details		E09-100142	ELECTRICAL WORK	5/11/2009	5/11/2009
Details		B09-100360	ALTERATIONS-EXTERIOR & INTERIOR	1/29/2009	3/30/2009
Details		E08-101763	ELECTRICAL WORK	9/15/2008	9/26/2008
Details		E08-101678	ELECTRICAL WORK	8/29/2008	8/29/2008
Details		B08-103696	REROOF - FLAT	8/8/2008	8/12/2008
Details		M08-100362	A/C WINDOW/WALL UNIT	6/3/2008	6/3/2008
Details		E08-100687	ELECTRICAL WORK	5/27/2008	5/27/2008
Details		B08-101571	ADDITION	4/7/2008	5/27/2008
Details	72481	E9804207	ELECTRICAL WORK	8/28/1997	12/16/1998
Details	61437	E9801643	ELECTRICAL WORK	8/28/1997	5/11/1998
Details		B0106608	FENCE-CHAIN LINK &/OR WOOD		10/30/2001
Details		B9803081	ALTERATIONS-EXTERIOR		5/11/1998
Details		B9800816	PAVING		2/9/1998
Details		B9800815	DECK - WITH ROOF STRUCTURE		2/9/1998
Details		B9606071	SLAB - FOR FUTURE STRUCTURE		8/20/1996
Details		B9606070	FENCE-CHAIN LINK &/OR WOOD		8/20/1996
Details		B9606069	PAVING		8/20/1996
Details		B9606067	ROOFING - NEW - FLAT		8/20/1996
Details		B9606066	DECK - WITH ROOF STRUCTURE		8/20/1996
Details		P9500091	WELL		1/23/1995
Details		P20-101581	PLUMBING WORK		
Details		M20-101056	A/C CENTRAL (NEW)		
Details		E21-100489	ELECTRICAL WORK		
Details		B21-104341	LANDSCAPING - TREE REMOVAL		

Permit Details

Process #:	Permit #: B20-105887	Master Permit: B20-105887
Status: APPLIED		
List All Subpermits		

Site Information

Address: 1404 JACKSON ST
Sub-division: HOLLYWOOD 1-21 B , LOT 17 & LOT 18 E1/2 BLK 89
Lot: **Block:**

Folio#: 514215026660
Value: $30,000.00
Sq Ft: 0

Permit Information

Application Type: ALT- INTERIOR RESIDENTIAL - RELOCATE KITCHEN, INTERIOR REMODEL
Job Name: MIAMI-MAX INVESTMENTS LLC
Film Number:

Application Date: 9/15/2020
Permit Date:
CO/CC Date: N/A
Total Fees: $777.33
Recorded Payments: $0.00
Balance: $777.33

Applicant / Contact Information

Name: MIAMI-MAX INVESTMENTS LLC
Address: 18081 BISCAYNE BLVD #1605 AVENTURA FL 33160

Property Owner Information

Name: MIAMI-MAX INVESTMENTS LLC
Address: 18081 BISCAYNE BLVD #1605 AVENTURA FL 33160

Contractor Information

Name:
Address:

Permit Details

Process #:	Permit #: B09-100360	Master Permit: B09-100360
Status: CLOSED		
List All Subpermits		

Site Information	
Address: 1404 JACKSON ST **Sub-division:** HOLLYWOOD 1-21 B , LOT 17 & LOT 18 E1/2 BLK 89 **Lot:** **Block:**	**Folio#:** 514215026660 **Value:** $49,000.00 **Sq Ft:** 0

Permit Information	
Application Type: ALTERATIONS-EXTERIOR & INTERIOR **Job Name:** **Film Number:**	**Application Date:** 1/29/2009 **Permit Date:** 3/30/2009 **CO/CC Date:** N/A **Total Fees:** $1,427.15 **Recorded Payments:** $1,427.15 **Balance:** $0.00

Applicant / Contact Information
Name: KONDOLF,MATHIAS **Address:** 1404 JACKSON ST

Property Owner Information
Name: KONDOLF,MATHIAS **Address:** 1404 JACKSON ST

Contractor Information
Name: **Address:**

Permit Details

Process #:	Permit #: B09-102851	Master Permit: B09-100360
Status: CLOSED		
Show Master Permit		

Site Information	
Address: 1404 JACKSON ST	Folio#: 514215026660
Sub-division:	Value: $4,000.00
Lot: Block:	Sq Ft: 0

Permit Information	
Application Type: ROOFING - NEW - TILE Job Name: Film Number:	Application Date: 7/16/2009 Permit Date: 7/16/2009 CO/CC Date: N/A Total Fees: $106.40 Recorded Payments: $106.40 Balance: $0.00

Applicant / Contact Information
Name: ED HOBEL ROOFING Address: 1631 S DIXIE HWY POMPANO, FL

Property Owner Information
Name: KONDOLF,MATHIAS Address:

Contractor Information
Name: ED HOBEL ROOFING (Permits + Details) Address: 1631 S DIXIE HWY POMPANO, FL

Permit Details

Process #:	Permit #: E09-100142	Master Permit: B09-100360
Status: CLOSED		
Show Master Permit		

Site Information	
Address: 1404 JACKSON ST	**Folio#:** 514215026660
Sub-division:	**Value:** $4,500.00
Lot: **Block:**	**Sq Ft:** 0

Permit Information	
Application Type: ELECTRICAL WORK **Job Name:** **Film Number:**	**Application Date:** 5/11/2009 **Permit Date:** 5/11/2009 **CO/CC Date:** N/A **Total Fees:** $116.75 **Recorded Payments:** $116.75 **Balance:** $0.00

Applicant / Contact Information
Name: Q-ELECTRIC LLC **Address:** 9821 S W 2 ST PEMBROKE PINES, FL

Property Owner Information
Name: KONDOLF,MATHIAS **Address:**

Contractor Information
Name: Q-ELECTRIC LLC (Permits + Details) **Address:** 9821 S W 2 ST PEMBROKE PINES, FL

Permit Details

Process #:	Permit #: E09-100735	Master Permit: B09-100360
Status: CLOSED		
Show Master Permit		

Site Information	
Address: 1404 JACKSON ST	**Folio#:** 514215026660
Sub-division:	**Value:** $300.00
Lot: **Block:**	**Sq Ft:** 0

Permit Information	
Application Type: LOW VOLTAGE (CABLE TELEVISION) **Job Name:** **Film Number:**	**Application Date:** 5/21/2009 **Permit Date:** 5/21/2009 **CO/CC Date:** N/A **Total Fees:** $45.35 **Recorded Payments:** $45.35 **Balance:** $0.00

Applicant / Contact Information
Name: Q-ELECTRIC LLC **Address:** 9821 S W 2 ST PEMBROKE PINES, FL

Property Owner Information
Name: KONDOLF,MATHIAS **Address:**

Contractor Information
Name: Q-ELECTRIC LLC (Permits + Details) **Address:** 9821 S W 2 ST PEMBROKE PINES, FL

CITY OF HOLLYWOOD, FLORIDA
PERMIT APPLICATION

MASTER PROCESS # 909-100360

MASTER PERMIT # _____

Permit Type (Check one): ☐ STRUC, ☐ FIRE, ☐ ELEC, ☐ MECH, ☐ PLUMB, ☐ PAVING, ☐ WTR/SWR, ☐ DRAINAGE

APPLICATION DATE 6-21-09 TAX FOLIO NO. _____

LEGAL DESCRIPTION: L-17 & E 1/2 L-18 BLK 89 OF HOLLYWD BK 1 PG 21

JOB NAME RONDOLF PHONE # 305 335-2459

JOB ADDRESS 1404 JACKSON ST. HWD HOLLYWOOD, BROWARD COUNTY, FL. ZIP 33019

OWNER NAME Mathias Kondolf

Owners Address 1404 Jackson St. City Hywd State Fla Zip 33020

WORK DESCRIPTION ~~REPLACE EXIST. ROOF~~ ALTERATIONS EXT. & INTER 10R

USE/OCCUPANCY S.F. SQ. FT. 880 Value of Proposed Work:$ 49,000.-

CONTRACTOR'S NAME OWNER PHONE # 3053352459 Fax # _____

CONTRACTOR'S ADDRESS SAME CITY _____ STATE _____ ZIP _____

CONTRACTOR'S CERTIFICATION OR REGISTRATION NUMBER: _____ EMAIL ADDRESS _____

ARCHITECT/ENGINEER'S NAME R. ISHMAN PHONE # 954 929 9695 FAX # _____

ARCHITECT/ENGINEER'S ADDRESS 2117 HWD. BLVD CITY _____ STATE FL ZIP 33020

FEE SIMPLE TITLE HOLDER NAME _____

Fee Simple Title Holder Address _____ City _____ State _____ Zip _____

BONDING COMPANY NAME _____

Bonding Company Address _____ City _____ State _____ Zip _____

MORTGAGE LENDER'S NAME _____

Mortgage Lender's Address _____ City _____ State _____ Zip _____

Application is hereby made to obtain a permit to do work and installations as indicated. I certify that no work or installation has commenced prior to the issuance of a permit and that all work will be performed to meet the standards of all laws regulating construction in the City of Hollywood, Florida. I understand that a separate permit must be secured for ELECTRICAL WORK, PLUMBING, SIGNS, WELLS, POOLS, FURNACES, BOILERS, HEATERS, TANKS, AIR CONDITIONERS, etc.

OWNER'S AFFIDAVIT: I certify that all the foregoing information is accurate and that all work will be done in compliance with applicable laws regulating construction and zoning.

WARNING TO OWNER: YOUR FAILURE TO RECORD A NOTICE OF COMMENCEMENT MAY RESULT IN YOUR PAYING TWICE FOR IMPROVEMENTS TO YOUR PROPERTY. IF YOU INTEND TO OBATIN FINANCING, CONSULT WITH YOUR LENDER OR AN ATTORNEY BEFORE RECORDING YOUR NOTICE OF COMMENCEMENT.

Signature _____ Date: 01/20/09

Owner or **Agent

Sworn to (or affirmed) and subscribed before me this 21 day of January, 2009

GERALDA VARGAS
Comm# DD0435098
Expires 5/30/2009
Bonded Thru (800)432-4254

Signature _____

NOTARY as to Owner/Agent

___ Personally Known, ✓ Identification Provided: FL/DL

Signature _____ Date: _____

Prime Contractor

Sworn to (or affirmed) and subscribed before me this _____ day of _____, 20____

Signature _____

NOTARY as to Contractor

___ Personally Known, ____ I.D. Provided: _____

**** Individuals who sign as the owner's agent must first obtain the owner's authorization to sign on their behalf.**

Application Approved by: _____ Permit Officer **Effective Code: 20__ Florida Building Code**

CITY OF HOLLYWOOD, FLORIDA
PERMIT APPLICATION

MASTER PROCESS # _____

MASTER PERMIT # B09-100360

Permit Type (Check one): ☐ STRUC, ☐ FIRE, ☑ ELEC, ☐ MECH, ☐ PLUMB, ☐ PAVING, ☐ WTR/SWR, ☐ DRAINAGE

APPLICATION DATE 5/21/09 TAX FOLIO No. 514215026660

LEGAL DESCRIPTION: I-21 B, LOT 17 & LOT 18 E 1/2 BLK 99

JOB NAME KONDOLF, MATHIAS Residence. PHONE # _____

JOB ADDRESS 1409 JACKSON STREET HOLLYWOOD, BROWARD COUNTY, FL. ZIP _____

OWNER NAME _____

Owners Address _____ City _____ State _____ Zip _____

WORK DESCRIPTION TV Low voltage cabling.

USE/OCCUPANCY Residential SQ. FT. 1200 Value of Proposed Work:$ 300-

CONTRACTOR'S NAME Q-Electric LLC PHONE # _____ Fax # _____

CONTRACTOR'S ADDRESS 9821 SW 2nd STREET CITY Pembroke Pines STATE FL ZIP 33025

CONTRACTOR'S CERTIFICATION OR REGISTRATION NUMBER: EC13002901 EMAIL ADDRESS Qelectricllc@aol.com

ARCHITECT/ENGINEER'S NAME _____ PHONE # _____ FAX # _____

ARCHITECT/ENGINEER'S ADDRESS _____ CITY _____ STATE _____ ZIP _____

FEE SIMPLE TITLE HOLDER NAME _____

Fee Simple Title Holder Address _____ City _____ State _____ Zip _____

BONDING COMPANY NAME _____

Bonding Company Address _____ City _____ State _____ Zip _____

MORTGAGE LENDER'S NAME _____

Mortgage Lender's Address _____ City _____ State _____ Zip _____

Application is hereby made to obtain a permit to do work and installations as indicated. I certify that no work or installation has commenced prior to the issuance of a permit and that all work will be performed to meet the standards of all laws regulating construction in the City of Hollywood, Florida. I understand that a separate permit must be secured for ELECTRICAL WORK, PLUMBING, SIGNS, WELLS, POOLS, FURNACES, BOILERS, HEATERS, TANKS, AIR CONDITIONERS, etc.

OWNER'S AFFIDAVIT: I certify that all the foregoing information is accurate and that all work will be done in compliance with applicable laws regulating construction and zoning.

WARNING TO OWNER: YOUR FAILURE TO RECORD A NOTICE OF COMMENCEMENT MAY RESULT IN YOUR PAYING TWICE FOR IMPROVEMENTS TO YOUR PROPERTY. IF YOU INTEND TO OBATIN FINANCING, CONSULT WITH YOUR LENDER OR AN ATTORNEY BEFORE RECORDING YOUR NOTICE OF COMMENCEMENT.

Signature _____ Date: _____
Owner or **Agent

Sworn to (or affirmed) and subscribed before me this _____ day of _____, 20 ____.

Signature _____
NOTARY as to Owner/Agent

___ Personally Known, ____ Identification Provided: _____

Signature [signature] Date: 5/21/09.
Prime Contractor

Sworn to (or affirmed) and subscribed before me this 21 day of May 20 09.

Signature [signature]
NOTARY as to Contractor

___ Personally Known, ✓ I.D. Provided: FL DL
Q 626-256-63-298-0

**** Individuals who sign as the owner's agent must first obtain the owner's authorization to sign on their behalf.**

Application Approved by: _____ **Permit Officer** **Effective Code: 20__ Florida Building Code**

SCANNED

CITY OF HOLLYWOOD, FLORIDA
PERMIT APPLICATION

MASTER PROCESS # ~~B09-DD1946~~

MASTER PERMIT # B09-100 3606

Permit Type (Check one): ☐ STRUC, ☐ FIRE, ☐ ELEC, ☐ MECH, ☐ PLUMB, ☐ PAVING, ☐ WTR/SWR, ☐ DRAINAGE

APPLICATION DATE May. 14.2009 TAX FOLIO NO. 5142 1502 6660

LEGAL DESCRIPTION: Hollywood 1-22 B Lot 17 & 18 E 1/2 Blk 89

JOB NAME KONDOLF, MATHIAS PHONE # 9545433191

JOB ADDRESS 1404 Jackson ST HOLLYWOOD, BROWARD COUNTY, FL. ZIP 33020

OWNER NAME KONDOLF MATHIAS

Owners Address 1404 Jackson ST. City Hollywood State FL Zip 33020

WORK DESCRIPTION Tile new roof

USE/OCCUPANCY Residential SQ. FT. 1000 Value of Proposed Work: $ 4,000

CONTRACTOR'S NAME Ed Hobel Roofing PHONE # 9542029242 Fax # 954-202-9299

CONTRACTOR'S ADDRESS 1484 NE 53 Ct. CITY Ft. Ld. STATE FL ZIP 333

CONTRACTOR'S CERTIFICATION OR REGISTRATION NUMBER CCC029553 EMAIL ADDRESS

ARCHITECT/ENGINEER'S NAME N/A PHONE # FAX #

ARCHITECT/ENGINEER'S ADDRESS CITY STATE ZIP

FEE SIMPLE TITLE HOLDER NAME N/A

Fee Simple Title Holder Address City State Zip

BONDING COMPANY NAME N/A

Bonding Company Address City State Zip

MORTGAGE LENDER'S NAME N/A

Mortgage Lender's Address City State Zip

Application is hereby made to obtain a permit to do work and installations as indicated. I certify that no work or installation has commenced prior to the issuance of a permit and that all work will be performed to meet the standards of all laws regulating construction in the City of Hollywood, Florida. I understand that a separate permit must be secured for ELECTRICAL WORK, PLUMBING, SIGNS, WELLS, POOLS, FURNACES, BOILERS, HEATERS, TANKS, AIR CONDITIONERS, etc.

OWNER'S AFFIDAVIT: I certify that all the foregoing information is accurate and that all work will be done in compliance with applicable laws regulating construction and zoning.

WARNING TO OWNER: YOUR FAILURE TO RECORD A NOTICE OF COMMENCEMENT MAY RESULT IN YOUR PAYING TWICE FOR IMPROVEMENTS TO YOUR PROPERTY. IF YOU INTEND TO OBATIN FINANCING, CONSULT WITH YOUR LENDER OR AN ATTORNEY BEFORE RECORDING YOUR NOTICE OF COMMENCEMENT.

Signature Nathias Kondolf Date May 14 2009
Owner or **Agent

Sworn to (or affirmed) and subscribed before me this 14 day of May 20 09

Signature _____ NOTARY as to Owner/Agent

___ Personally Known ____ Identification Provided

Kathrine Jacke-Ortiz COMMISSION # DD712383 EXPIRES: SEP. 09, 2011 WWW.AARONNOTARY.com

Signature Ed Hobel Date 5/14/09
Prime Contractor

Sworn to (or affirmed) and subscribed before me this 14 day of MAY 20 09

Signature _____ NOTARY as to Contractor

Personally Known ____ I.D. Provided

Kathrine Jacke-Ortiz COMMISSION # DD712753 EXPIRES: SEP. 09, 2011 WWW.AARONNOTARY.com

**** Individuals who sign as the owner's agent must first obtain the owner's authorization to sign on their behalf.**

Application Approved by: GAU **Permit Officer**

Effective Code: 2007 Florida Building Code

CITY OF HOLLYWOOD, FLORIDA
PERMIT APPLICATION

MASTER PROCESS # _____

MASTER PERMIT # B09100360

Permit Type (Check one): ☐ STRUC, ☐ FIRE, ☑ ELEC, ☐ MECH, ☐ PLUMB, ☐ PAVING, ☐ WTR/SWR, ☐ DRAINAGE

APPLICATION DATE 5/8/09 TAX FOLIO NO. _____

LEGAL DESCRIPTION: _____

JOB NAME _____ PHONE # _____

JOB ADDRESS 1404 JACKSON STREET HOLLYWOOD, BROWARD COUNTY, FL. ZIP _____

OWNER NAME _____

Owners Address _____ City _____ State _____ Zip _____

WORK DESCRIPTION Electrical remodeling

USE/OCCUPANCY _____ SQ. FT. _____ Value of Proposed Work:$ 4,500.00

CONTRACTOR'S NAME Q-Electric LLC PHONE # 954-682-0549 Fax # 954-435-8062

CONTRACTOR'S ADDRESS 9821 SW 2nd Street CITY Pembroke Pines STATE FL ZIP 33025

CONTRACTOR'S CERTIFICATION OR REGISTRATION NUMBER: EC-13002801 EMAIL ADDRESS qelectricllc@aol.com

ARCHITECT/ENGINEER'S NAME _____ PHONE # _____ FAX # _____

ARCHITECT/ENGINEER'S ADDRESS _____ CITY _____ STATE _____ ZIP _____

FEE SIMPLE TITLE HOLDER NAME _____

Fee Simple Title Holder Address _____ City _____ State _____ Zip _____

BONDING COMPANY NAME _____

Bonding Company Address _____ City _____ State _____ Zip _____

MORTGAGE LENDER'S NAME _____

Mortgage Lender's Address _____ City _____ State _____ Zip _____

Application is hereby made to obtain a permit to do work and installations as indicated. I certify that no work or installation has commenced prior to the issuance of a permit and that all work will be performed to meet the standards of all laws regulating construction in the City of Hollywood, Florida. I understand that a separate permit must be secured for ELECTRICAL WORK, PLUMBING, SIGNS, WELLS, POOLS, FURNACES, BOILERS, HEATERS, TANKS, AIR CONDITIONERS, etc.

OWNER'S AFFIDAVIT: I certify that all the foregoing information is accurate and that all work will be done in compliance with applicable laws regulating construction and zoning.

WARNING TO OWNER: YOUR FAILURE TO RECORD A NOTICE OF COMMENCEMENT MAY RESULT IN YOUR PAYING TWICE FOR IMPROVEMENTS TO YOUR PROPERTY. IF YOU INTEND TO OBATIN FINANCING, CONSULT WITH YOUR LENDER OR AN ATTORNEY BEFORE RECORDING YOUR NOTICE OF COMMENCEMENT.

Signature _____ Date: _____
Owner or **Agent

Sworn to (or affirmed) and subscribed before me this _____ day of _____, 20 ____.

Signature _____
NOTARY as to Owner/Agent

___ Personally Known. ___ Identification Provided: _____

Signature X [signature] Date: X 5/11/09
Prime Contractor

Sworn to (or affirmed) and subscribed before me this 11th day of May, 20 09.

Signature [signature]
NOTARY as to Contractor

___ Personally Known. ___ I.D. Provided: FC/DC

Notary Public - State of Florida
My Commission Expires Aug 27, 2009
Commission # DD462230
Bonded by National Notary Assn.

**** Individuals who sign as the owner's agent must first obtain the owner's authorization to sign on their behalf.**

Application Approved by: ED **Permit Officer** **Effective Code: 20__ Florida Building Code**

SCANNED

Broward County Board of Rules and Appeals
One North University Drive, 3500-B
Fort Lauderdale, Florida 33324

Effective July 11, 2008
Telephone: 954.765.4500
Facsimile: 954.765.4504

FORM FOR "SPECIAL BUILDING INSPECTOR"
SECTION 109.10 – BROWARD COUNTY ADMINISTRATIVE CODE AND THE 2004 FLORIDA BUILDING CODE

NOTICE TO PROPERTY OWNER:

You are hereby directed in accordance with Section 109.10 of the Broward County Administrative Code and the Florida Building Code to retain a Special Structural Inspector (A Florida Registered Architect or Licensed Engineer) to perform the following mandatory or discretionary inspections, as outlined in Sections 109.10, 1822, 2122.4, R4407.5.4, 223.11.1, 1927.12.1, R4405.9.12.1, 1927.12.2, R4405.9.12.2, R4408.5.2 & R4408.10.11 of the Florida Building Code and submit progress reports, inspections reports, and a Certificate of Compliance to the Building Official as per Sections 109.10.4 and 109.10.5 of the Florida Building Code.

Note: The Building Official determines which discretionary inspections are to be delegated.

APPROVED
MAR 25 2009
STRUCTURAL

DATE Jan. 26, 2009 IDENTIFICATION CONTROL OR BUILDING PERMIT # _____

PROJECT NAME: ROOF REPLACEMENT

JOB ADDRESS 1404 JACKSON ST. Hollywood FL. ZIP 33020

LEGAL DESCRIPTION: _____ FOLIO # _____

A. MANDATORY INSPECTIONS TYPE BY CODE:

1) Precast Concrete Units – Section 1927.12.1, R4405.9.12.1, 109.10.2.1 ..... Yes ☐ No ☐
2) Precast Concrete Units – Section 1927.12.2, R4405.9.12.2, 109.10.2.1 ..... Yes ☐ No ☐
3) Reinforced Unit Masonry – Section 2122.4, R4407.5.4, 109.10.2.2 (per ACI 530.1-05-Level B Quality Assurance)*
*unless noted otherwise on plan ..... Yes ☐ No ☐
4) Connections – Section 2218.2, 109.10.2.3 ..... Yes ☐ No ☐
5) Metal Systems Building – Section 2223.11.1, 109.10.2.4 ..... Yes ☐ No ☐

B. DISCRETIONARY INSPECTION TYPE BY BUILDING OFFICIAL:

1) Building Structures or part thereof of Unusual Size, Height, Design or Method of Construction and Critical Structural Connections – Section 109.10.1.1 ..... Yes ☐ No ☐
2) Windows, Glass Doors and Curtain Walls on buildings over two (2) stories – Section 109.10.1.1 ..... Yes ☐ No ☐
3) Pile Driving Only – Sections 1822, R4404.13, 109.10.3 ..... Yes ☐ No ☐
4) Precast Concrete Units – Section 1822, R4404.13, 109.10.3 ..... Yes ☐ No ☐
5) Reinforced Unit masonry – Sections 2122.4, R4407.5.4, 109.10.3 ..... Yes ☐ No ☐
6) Other ROOF TRUSS PLACEMENT ..... Yes ☒ No ☐

C. MANDATORY DOCUMENTATION

1) Inspection schedule stating the specific inspection that will be made and at what phase of construction must be submitted with this application.
2) Progress Report/Inspection reports during construction in accordance with Section 109.10.4.
3) Certificate of Compliance must be submitted prior to the scheduling of the final building inspection, Section 109.10.5.

ACKNOWLEDGMENT

Owner's Signature: Mathias Kondolf
Printed Name: Mathias Kondolf

Permit Holder's Signature: Mathias Kondolf
Printed Name: Mathias Kondolf
License # (if applicable) OWNER

SPECIAL BUILDING INSPECTOR:

☒ Registered Architect and/or ☐ Licensed Engineer

Signature of Special Building Inspector, Embossed Seal AND Date: 1.26.09

Printed Name of Special Building Inspector: ROBERT ISHMAN
Address of Special Building Inspector: 2117 Hollywood Blvd. Hollywood FL 33020
State of Florida Registration # AR12684 Fax # 954 929 9597 Telephone # 954 929 9695

Date: 1/26/09

Building Official (or designated representative)

BE ADVISED THIS DOES NOT PRECLUDE YOU FROM OTHER MANDATORY INSPECTIONS IN THE CODE

G:\RAI\SHARED\Forms\2004 FBC Special Bldg Insp Form.doc

SCANNED
JAN 13 2011
BUILDING DIV

Signature # _____ Title # _____

NOTICE OF COMMENCEMENT

The undersigned hereby gives notice that improvement will be made to certain real property and in accordance with Chapter 713, Florida Statutes, the following information is provided in this Notice of Commencement:

1. Legal Description of Property: Lot ___ Block ___ Unit # ___ Bldg # ___ Lengthy legal attached
   Street Address if available: 1404 JACKSON ST. HWD FL.
2. General description of improvement: NEW ROOF STRUCTURE
3. a. Owner name and address: M. KONDOLF
   b. Interest in property: FEE SIMPLE
   c. Name and address of fee simple Interbolder (if other than Owner):
4. a. Contractor name and address: JOE HART BUILDER INC
   b. Contractor's phone number: 954 812 7357
5. a. Surety name and address:
   b. Surety's phone number:
   c. Amount of bond:
6. a. Lender name and address:
   b. Lender's phone number:
7. a. Persons within the State of Florida designated by Owner upon whom notices or other documents may be served as provided by Section 713.13(1)(a)7., Florida Statutes:
   Name: M. KONDOLF
   Address: 1404 JACKSON ST HWD FLA
   b. Phone number: 305 333 2459
8. a. In addition to himself or herself, the Owner designates JOE HARYIGAN to receive a copy of Lienor's Notice per Section 713.13(1)(b), Florida
   b. Phone number of person or entity designated by owner: 954-812-7357
9. Expiration date of notice of commencement: _____ (the expiration date is 1 year from the date of recording unless a different date is specified)

WARNING TO OWNER: ANY PAYMENTS MADE BY THE OWNER AFTER THE EXPIRATION OF THE NOTICE OF COMMENCEMENT ARE CONSIDERED IMPROPER PAYMENTS UNDER CHAPTER 713, PART I, SECTION 713.13, FLORIDA STATUTES, AND CAN RESULT IN YOUR PAYING TWICE FOR IMPROVEMENTS TO YOUR PROPERTY. A NOTICE OF COMMENCEMENT MUST BE RECORDED AND POSTED ON THE JOB SITE BEFORE THE FIRST INSPECTION. IF YOU INTEND TO OBTAIN FINANCING, CONSULT WITH YOUR LENDER OR AN ATTORNEY BEFORE COMMENCING WORK OR RECORDING YOUR NOTICE OF COMMENCEMENT.

Signature(s) of Owner(s) or Owner(s)' Authorized Officer/Director/Partner/Manager

By: Mathias Kondolf
Print Name: Mathias Kondolf
Title/Office: Owner

By: _____
Print Name: _____
Title/Office: _____

STATE OF FLORIDA
COUNTY OF BROWARD

The foregoing instrument was acknowledged before me this 16 day of JANUARY 2009

By: MATHIAS KONDOLF

☐ Individually, or ☐ as _____ for _____

☒ Personally known, or ☐ produced the following type of identification:

Signature of Notary Public: Robert G. Ishman
Print Name: ROBERT G. ISHMAN
(SEAL)

ROBERT [redacted]MAN
MY COM[redacted] # DD66[redacted]
EXPIRES April 24, 201[redacted]
HOTEL 396-0155
The Notary Service

VERIFICATION PURSUANT TO SECTION 92.525, FLORIDA STATUTES

Under penalties of perjury, I declare that I have read the foregoing and that the facts stated in it are true, to the best of my knowledge and belief.

Signature(s) of Owner(s) or Owner(s)' Authorized Officer/Director/Partner/Manager who signed above

By: Mathias Kondolf

By: _____

SCANNED JAN 13 2009 BUILDING DIV

COUNTY COMMISSIONERS CREATED OCT 1ST 1915 BROWARD COUNTY FLORIDA

I hereby certify this document to be a true correct and complete copy of the record filed in my office. Dated this 20 day of Jan 2009

By _____ Deputy Clerk

CFN # 108728502, OR BK 46372 Page 45, Page 1 of 1, Recorded 07/13/2009 at 01:58 PM, Broward Co[illegible] Commission, Deputy Clerk 2015

Permit # B09-102196 Folio # 514215026660

NOTICE OF COMMENCEMENT

The undersigned hereby gives notice that improvement will be made to certain real property and in accordance with Chapter 713, Florida Statutes, the following information is provided in this Notice of Commencement:

1. Legal Description of Property: Lot 17 & 18 Block 89 Unit # ___ Bldg # ___ ☐ Legal(s) attached
   Subdivision / Condominium: Hollywood 1-21B
   Street Address if available:
2. General description of improvement: Reroof
3. a. Owner name and address: KONDOLF, MATHIAS
   b. Interest in property:
   c. Name and address of fee simple titleholder (if other than Owner): 1964 Jackson St. Hollywood FL 33020
4. a. Contractor name and address: Ed Hobel Roofing - $836 Refund 5 Dixie Hwy 33060
   b. Contractor's phone number: 954-922-1662
5. a. Surety name and address: N/A
   b. Surety's phone number:
   c. Amount of bond: $
6. a. Lender name and address: N/A
   b. Lender's phone number:
7. a. Persons within the State of Florida designated by Owner upon whom notices or other documents may be served as provided by Section 713.13(1)(a)7., Florida Statutes:
   Name: N/A
   Address:
   b. Phone number:
8. a. In addition to himself or herself, the Owner designates N/A to receive a copy of Lienor's Notice per Section 713.13(1)(b), Florida
   b. Phone number of person or entity designated by owner:
9. Expiration date of notice of commencement: (the expiration date is 1 year from the date of recording unless a different date is specified)

WARNING TO OWNER: ANY PAYMENTS MADE BY THE OWNER AFTER THE EXPIRATION OF THE NOTICE OF COMMENCEMENT ARE CONSIDERED IMPROPER PAYMENTS UNDER CHAPTER 713, PART I, SECTION 713.13, FLORIDA STATUTES, AND CAN RESULT IN YOUR PAYING TWICE FOR IMPROVEMENTS TO YOUR PROPERTY. A NOTICE OF COMMENCEMENT MUST BE RECORDED AND POSTED ON THE JOB SITE BEFORE THE FIRST INSPECTION. IF YOU INTEND TO OBTAIN FINANCING, CONSULT WITH YOUR LENDER OR AN ATTORNEY BEFORE COMMENCING WORK OR RECORDING YOUR NOTICE OF COMMENCEMENT.

Signature(s) of Owner(s) or Owner's Authorized Officer/Director/Partner/Manager

By: [signature] By:
Print Name: MATHIAS KONDOLF Print Name:
Title/Office: Title/Office:

STATE OF FLORIDA
COUNTY OF BROWARD

The foregoing instrument was acknowledged before me this 13 day of July 2009
By:
☐ Individually, or ☐ as for
☐ Personally known, or ☐ produced the following type of identification:

Signature of Notary Public: [signature]
Print Name:
(SEAL)

VERA BOWIE
Notary Public - State of Florida
My Comm. Expires May 26, 2013
Commission # DD 889385

VERIFICATION PURSUANT TO SECTION 92.525, FLORIDA STATUTES
Under penalties of perjury, I declare that I have read the foregoing and that the facts stated in it are true, to the best of my knowledge and belief.

Signature(s) of Owner(s) or Owner's Authorized Officer/Director/Partner/Manager who signed above:

By: [signature] Mathias Kondolf By:

COUNTY COMMISSIONERS CREATED OCT 1st 1915 BROWARD COUNTY, FLORIDA

I hereby certify this document to be a true, correct and complete copy of the record filed in my office. Dated this 13 day of July 09
County Administrator
By: [signature]
Deputy Clerk

SCANNED JUL 13 2009 BUILDING DIV

BROWARD COUNTY FLORIDA

Broward County
ENVIRONMENTAL PROTECTION DEPARTMENT (EPD)
Air Quality Division

STATEMENT OF RESPONSIBILITIES REGARDING ASBESTOS

IF YOU ARE PLANNING TO DEMOLISH OR RENOVATE ANY EXISTING STRUCTURE, YOU MAY BE SUBJECT TO FEDERAL AND COUNTY RULES RELATING TO THE HANDLING OF ASBESTOS CONTAINING MATERIAL. PLEASE FILL OUT THIS FORM TO DETERMINE IF THE ASBESTOS RULES APPLY TO YOU. SEE REVERSE SIDE FOR ADDITIONAL INFORMATION.

I. PROJECT INFORMATION:

Facility Owner: Randolf Mathis Phone: 954 757 4247

Mailing Address: 1201 Jackson St City: Hollywood Zip: 33019

Project Address: Same City: _____ Zip: _____

Contractor Performing Work: Pat Hood Phone: _____

Estimated Start Date: 5-6-08 Estimated Finish Date: 6-6-08

Building Department Jurisdiction: _____

Project Description: Roof Tile

☒ **Single-family residential home (not for commercial purpose) – If you check this box, skip sections II and III. Review the back* of this form and then sign and date this form at the bottom.**

II. PLEASE MARK THE APPROPRIATE BOX(ES) IF APPLICABLE:

1. FACILITY: (Check One)

- ☐ Commercial, industrial, or public building
- ☐ One residential building of more than four dwelling units
- ☐ Any residential property being demolished for commercial purpose or by government order
- ☐ School/College/University
- ☐ Two or more residential structures at the same site
- ☐ Unsafe structure
- ☐ Emergency

2. ACITIVITY: (Check all that apply)

Demolition: ☐ Total ☐ Partial (Wrecking/dismantling any load-supporting structural member)

Renovations: ☐ **Built-up roofing removal (5580 sq. ft. or greater)** ☐ Exterior alteration ☐ Interior alteration

III. IF ANY BOX IS MARKED UNDER FACILITY AND ACTIVITY THEN THE FOLLOWING ITEMS ARE REQUIRED:

1. An original ***Notice of Asbestos Renovation or Demolition**** DEP form 62-257.900(1) must be filled out and submitted at least ten (10) working-days before start of project, for:
   - all demolitions
   - all renovations involving at least 160 sq. ft. or 260 linear ft. or 35 cubic ft. of regulated asbestos containing material
2. The ***Notice of Asbestos Renovation or Demolition**** form **must** be accompanied by an asbestos survey report to indicate the presence or absence of asbestos containing material. **The asbestos survey report must be done in accordance with Broward County Code Chapter 27, Section 180.**

I have received information regarding the use of a Florida licensed asbestos professional (See reverse side) and understand that I may be subject to the ten (10) working-day advanced notification requirement under the Federal Law regarding demolitions or renovations **(See reverse side).**

Owner (Print): Randolf Mathis

-or-

Authorized Agent (Print): _____ Title: _____

Signature: _____ Date: 5-1-08

SCANNED 5/13/08 BUILDING DIV

*Notice of Asbestos Renovation or Demolition form is available at: www.broward.org/air

DISCLOSURE STATEMENT

State law requires construction to be done by licensed contractors.

You have applied for a permit under an exemption to that law. The exemption allows you, as the owner of your property, to act as your own contractor with certain restrictions even though you do not have a license. You must provide direct, on-site supervision of the construction yourself. You may build or improve a one-family or two-family residence or a farm outbuilding. You may also build or improve a commercial building, provided your costs do not exceed $25,000. The building or residence must be for your own use or occupancy. It may not be built or substantially improved for sale or lease. If you sale or lease a building you have built or substantially improved yourself within 1 year after the construction is complete, the law will presume that you built or substantially improved it for sale or lease, which is a violation of this exemption. You may not hire an unlicensed person to act as your contractor or to supervise people working on your building. It is your responsibility to make sure that people employed by you have licenses required by state law and by county or municipal licensing ordinances. You may not delegate the responsibility for supervising work to a licensed contractor who is not licensed to perform the work being done. Any person working on your building who is not licensed must work under your direct supervision and must be employed by you, which means that you must deduct F.I.C.A. and withholding tax and provide workers' compensation for that employee, all as prescribed by law. Your construction must comply with all applicable laws, ordinances, building codes, and zoning regulations.

Reference Florida Statue 489.103(7)

Owner Signature Date



Note: Properties held in corporate ownership are not included within this exemption and must obtain permits through licensed contractors.

17-101 (02/06)

ADDENDUM

YOU ARE BEING PROVIDED THIS NOTICE PURSUANT TO SECTION 713.015 FLORIDA STATUTES.

ACCORDING TO FLORIDA'S CONSTRUCTION LIEN LAW (SECTIONS 713.001-713.37, FLORIDA STATUTES), THOSE WHO WORK ON YOUR PROPERTY OR PROVIDE MATERIALS AND ARE NOT PAID IN FULL HAVE A RIGHT TO ENFORCE THEIR CLAIM FOR PAYMENT AGAINST YOUR PROPERTY. THIS CLAIM IS KNOWN AS A CONSTRUCTION LIEN.

IF YOUR CONTRACTOR OR A SUB-CONTRACTOR FAILS TO PAY SUBCONTRACTORS, SUB-SUB-CONTRACTORS, OR MATERIAL SUPPLIERS OR NEGLECTS TO MAKE OTHER LEGALLY REQUIRED PAYMENTS, THE PEOPLE WHO ARE OWED MONEY MAY LOOK TO YOUR PROPERTY FOR PAYMENT, EVEN IF YOU HAVE PAID YOUR CONTRACTOR IN FULL.

IF YOU FAIL TO PAY YOUR CONTRACTOR, YOUR CONTRACTOR MAY ALSO HAVE A LIEN ON YOUR PROPERTY. THIS MEANS IF A LIEN IS FILED YOUR PROPERTY COULD BE SOLD AGAINST YOUR WILL TO PAY FOR LABOR, MATERIALS, OR OTHER SERVICES THAT YOUR CONTRACTOR OR A SUBCONTRACTOR MAY HAVE FAILED TO PAY. FLORIDA'S CONSTRUCTION LIEN LAW IS COMPLEX AND IT IS RECOMMENDED THAT WHENVER A SPECIFIC PROBLEM ARISES, YOU CONSULT AN ATTORNEY.

Victoria Conde

Owner

Date: May 24/ 2009



3 PAGES

MECAWind Version 2.0.2.5 per ASCE 7-02

Developed by MECA Enterprises, Inc. Copyright 2009 www.mecaenterprises.com

Date	: 1/23/2009	Project No.	: K9006
Company Name	: G.D. KLIEGER, INC.	Designed By	: G.D.K
Address	: 1909 HARRISON ST., STE 204	Description	: ROOF REPLACEMENT - 1404 JACKSON
City	: HOLLYWOOD, FL 33020	Customer Name	: R. ISHMAN ARCH.
State	: P: 954.923.2111 F: 954.923.49	Proj Location	: HOLLYWOOD, FL

File Location: X:\Cadd-Files\Ishman-1404 jackson\Ishman-1404 jackson Wind.wnd

User Input Data:

Basic Wind Speed(V)	=	140.00 mph	Structure Type	=	Building
Structural Category	=	II	Exposure Category	=	C
Natural Frequency	=	N/A	Flexible Structure	=	No
Importance Factor	=	1.00	Kd Directional Factor	=	1.00
Alpha	=	9.50	Zg	=	900.00 ft
At	=	0.11	Bt	=	1.00
Am	=	0.15	Bm	=	0.65
Cc	=	0.20	l	=	500.00 ft
Epsilon	=	0.20	Zmin	=	15.00 ft
Slope of Roof	=	4 : 12	Slope of Roof(Theta)	=	18.40 Deg
Ht: Mean Roof Ht	=	20.50 ft	Type of Roof	=	Ripped
RHt: Ridge Ht	=	23.00 ft	Eht: Eave Height	=	18.00 ft
OH: Roof Overhang at Eave	=	2.00 ft	Roof Area	=	868.00 ft^2
Bldg Length Along Ridge	=	30.00 ft	Bldg Width Across Ridge	=	30.00 ft

Main Wind Force Resisting System(MWFRS)

Figure 6-5 Internal Pressure Coefficients for Buildings, GCpi

Enclosed Bldg +GCpi = 0.18 Enclosed Bldg -GCpi = -0.18



Figure 6-6 External Pressure Coefficients
Cp - Loads on Main Wind-Force Resisting Systems(Method 2)
MWFRS-Wall Pressures Perpendicular to Ridge

Wall	Cp	+GCpi(psf)	-GCpi(psf)
Leeward Walls	-0.50	-27.52	-11.14
Side Walls	-0.70	-35.25	-18.88

Top Elev ft	Bot Elev ft	Kz	Kzt	qz psf	----Windward Wall---- +GCpi	-GCpi	Total +/-GCpi	Shear Kip	Moment K-ft
23.00	13.00	0.93	1.00	46.60	23.50	39.88	51.02	4.59	6.89
20.00	10.00	0.90	1.00	45.25	22.58	38.96	50.10	19.62	127.97
10.00	.00	0.85	1.00	42.59	20.78	37.15	48.30	34.11	396.65

Note: 1) Total = Leeward GCPi + Windward GCPi
2) Shear and Moment are sum of forces (Leeward+Windard) acting at 'Bot Elev'

Roof Location	Cp	+GCpi(psf)	-GCpi(psf)
Windward - Min Cp	-0.61	-31.77	-15.40
Windward - Max Cp	-0.10	-12.05	4.32
Leeward Perp to Ridge	-0.58	-30.61	-14.24
Overhang Top (Windward)	-0.61	-23.59	-23.59
Overhang Top (Leeward)	-0.58	-22.43	-22.43
Overhang (Windward only)	0.80	30.10	30.10



MWFRS-Wall Pressures Parallel to Ridge

Wall	Cp	+GCpi (psf)	-GCpi (psf)
Leeward Walls	-0.50	-27.52	-11.14
Side Walls	-0.70	-35.25	-18.88

Top Elev ft	Bot Elev ft	Kz	Kzt	qz psf	----Windward Wall---- +GCpi	-GCpi	Total +/-GCpi	Shear Kip	Moment K-ft
23.00	13.00	0.93	1.00	46.60	23.50	39.88	51.02	4.59	6.89
20.00	10.00	0.90	1.00	45.25	22.58	38.96	50.10	19.62	127.97
10.00	.00	0.85	1.00	42.59	20.78	37.15	48.30	34.11	396.65

Note: 1) Total = Leeward GCPi + Windward GCPi
2) Shear and Moment are sum of forces (Leeward+Windard) acting at 'Bot Elev'

Roof - Dist from Windward Edge	Cp	+GCpi (psf)	-GCpi (psf)
0.0 ft to 10.3 ft	-0.96	-45.30	-28.92
10.3 ft to 20.5 ft	-0.83	-40.15	-23.78
20.5 ft to 30.0 ft	-0.57	-30.36	-13.98

Low Rise Bldg Provisions per Fig. 6-10: MWFRS Transverse Direction

Building Surface	GCpf	+GCpi	-GCpi	qh psf	Min P psf	Max P psf
1	0.52	0.18	-0.18	45.49	15.47	31.80
2	-0.69	0.18	-0.18	45.49	-39.58	-23.20
3	-0.47	0.18	-0.18	45.49	-29.57	-13.19
4	-0.42	0.18	-0.18	45.49	-27.29	-10.92
5	-0.45	0.18	-0.18	45.49	-28.66	-12.28
6	-0.45	0.18	-0.18	45.49	-28.66	-12.28
1E	0.78	0.18	-0.18	45.49	27.29	43.67
2E	-1.07	0.18	-0.18	45.49	-56.86	-40.49
3E	-0.67	0.18	-0.18	45.49	-38.67	-22.29
4E	-0.62	0.18	-0.18	45.49	-36.39	-20.02
1T	*	*	*	*	3.87	7.96
2T	*	*	*	*	-9.89	-5.80
3T	*	*	*	*	-7.39	-3.30
4T	*	*	*	*	-6.82	-2.73

AVE UPLIFT = 34.6 psf
Wall -5psf DL
NET: 30psf ↑

Low Rise Bldg Provisions per Fig. 6-10: MWFRS Longitudinal Direction

Building Surface	GCpf	+GCpi	-GCpi	qh psf	Min P psf	Max P psf
1	0.4	0.18	-0.18	45.49	10.01	26.38
2	-0.69	0.18	-0.18	45.49	-39.58	-23.20
3	-0.37	0.18	-0.18	45.49	-25.02	-8.64
4	-0.29	0.18	-0.18	45.49	-21.38	-5.00
5	-0.45	0.18	-0.18	45.49	-28.66	-12.28
6	-0.45	0.18	-0.18	45.49	-28.66	-12.28
1E	0.61	0.18	-0.18	45.49	19.56	35.94
2E	-1.07	0.18	-0.18	45.49	-56.86	-40.49
3E	-0.53	0.18	-0.18	45.49	-32.30	-15.92
4E	-0.43	0.18	-0.18	45.49	-27.75	-11.37
1T	*	*	*	*	2.50	6.60
2T	*	*	*	*	-9.89	-5.80
3T	*	*	*	*	-6.25	-2.16
4T	*	*	*	*	-5.35	-1.25

Wind Pressure on Components and Cladding

Width of Pressure Coefficient Zone "a" = 3 ft

Description	Width	Span	Area	Zone	Max	Min	Max P	Min P

	ft	ft	ft^2		GCp	GCp	psf	psf
TRUSS (1)	2.00	10.00	33.33	1	0.395	-0.848	26.175	-46.749
TRUSS (2)	2.00	10.00	33.33	2	0.395	-1.439	26.175	-73.626
TRUSS (3)	2.00	10.00	33.33	3	0.395	-1.439	26.175	-73.626
OH (2)	3.00	2.00	6.00	2H	0.500	-2.200	22.744	-100.076
OH (3)	3.00	2.00	6.00	3H	0.500	-3.700	22.744	-168.309
ROOFING (1)	3.00	3.00	9.00	1	0.500	-0.900	30.932	-49.128
ROOFING (2)	3.00	3.00	9.00	2	0.500	-1.700	30.932	-85.519
ROOFING (3)	3.00	3.00	9.00	3	0.500	-1.700	30.932	-85.519
WALL (4)	2.00	9.00	27.00	4	0.924	-1.024	50.212	-54.760
WALL (5)	2.00	9.00	27.00	5	0.924	-1.248	50.212	-64.942
GLASS D/W (4)	3.00	3.00	9.00	4	1.000	-1.100	53.677	-58.226
GLASS D/W (5)	3.00	3.00	9.00	5	1.000	-1.400	53.677	-71.872
SOLID DOOR (5)	3.00	7.00	21.00	4	0.943	-1.043	51.088	-55.637
SOLID DOOR (5)	3.00	7.00	21.00	5	0.943	-1.286	51.088	-66.695

-6psf
=67psf

Kd = 1.00

1 PAGE

MECAWind Version 2.0.2.5 ASCE 7-02

Developed by MECA Enterprises, Inc. Copyright 2009 www.mecaenterprises.com

Date	: 1/23/2009	Project No.	: K9006
Company Name	: G.D. KLIEGER, INC.	Designed By	: G.D.K
Address	: 1909 HARRISON ST., STE 204	Description	: ROOF REPLACEMENT - 1404 JACKSO
City	: HOLLYWOOD, FL 33020	Customer Name	: R. ISHMAN ARCH.
State	: P: 954.923.2111 F: 954.923.49	Proj Location	: HOLLYWOOD, FL

File Location: X:\Cadd-Files\Ishman-1404 jackson\Ishman-1404 jackson Wind.wnd

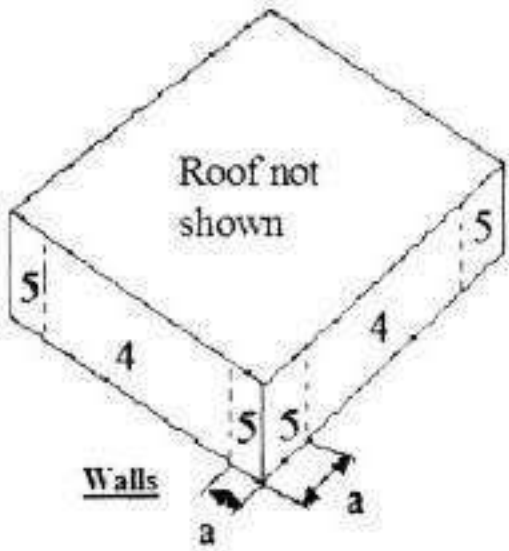

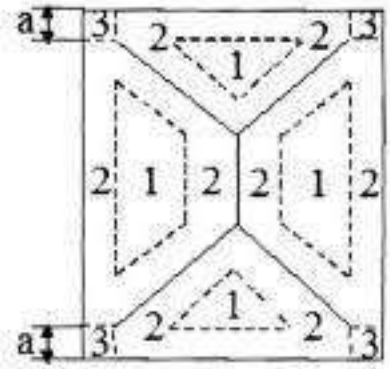

Hip Roof $7 < \theta <= 27$

Wind Pressure on Components and Cladding

Width of Pressure Coefficient Zone "a" = 3 ft

Description	Width ft	Span ft	Area ft^2	Zone	Max GCp	Min GCp	Max P psf	Min P psf
TRUSS (1)	2.00	10.00	33.33	1	0.395	-0.848	22.249	-39.757
TRUSS (2)	2.00	10.00	33.33	2	0.395	-1.439	22.249	-62.583
TRUSS (3)	2.00	10.00	33.33	3	0.395	-1.439	22.249	-62.583
OH (2)	3.00	2.00	6.00	2H	0.500	-2.200	19.333	-85.064
OH (3)	3.00	2.00	6.00	3H	0.500	-3.700	19.333	-143.063
ROOFING (1)	3.00	3.00	9.00	1	0.500	-0.900	26.293	-41.758
ROOFING (2)	3.00	3.00	9.00	2	0.500	-1.700	26.293	-72.601
ROOFING (3)	3.00	3.00	9.00	3	0.500	-1.700	26.293	-72.691
WALL (4)	2.00	9.00	27.00	4	0.924	-1.024	42.680	-46.546
WALL (5)	2.00	9.00	27.00	5	0.924	-1.248	42.680	-55.201
GLASS D/W (4)	3.00	3.00	9.00	4	1.000	-1.100	45.625	-49.492
GLASS D/W (5)	3.00	3.00	9.00	5	1.000	-1.400	45.625	-61.092
SOLID DOOR (5)	3.00	7.00	21.00	4	0.943	-1.043	43.425	-47.292
SOLID DOOR (5)	3.00	7.00	21.00	5	0.943	-1.286	43.425	-56.691

Kd = 0.85

Khcc:Comp. & Clad. Table 6-3 Case 1 = 0.91

Qhcc:.00256*V^2*I*Khcc*Kht*Kd = 38.67 psf

SCANNED JAN 13 2011 BUILDING DIV

G.D. Klieger, Inc. - Consulting Structural Engineers
1909 Harrison St., Ste 204, Hollywood, FL 33020
P: 954-923-2111 F: 954-923-4949
Gershon D. Klieger, PE FL. PE#36109

K9006

TRUSS TO WALL CONNECTION (FOR COMBINED UPLIFT + HORIZONTAL REACTIONS:

PROJECT: ROOF REPLACEMENT
1404 JACKSON ST., HOLLYWOOD, FL 01/23/2009

	TYP 8.0' Roof Truss (Lbs)	TYP 33.0' Roof GT (Lbs)
"MAIN-FRAME" NET WIND REACTIONS		
A. ROOF/FLOOR TRUSS:		
UPLIFT REACTION =	240	5,950
HORIZONTAL =	0	0
B. WALL:		
UPLIFT REACTION =	0	0
HORIZONTAL =	290	0
"COMPONENTS-CLADDING" - NET WIND REACTIONS		
C. ROOF/FLOOR TRUSS:		
UPLIFT REACTION =	550	9,900
HORIZONTAL =	0	0
D. WALL:		
UPLIFT REACTION =	0	0
HORIZONTAL =	500	0
GRAVITY (DOWNWARD) LOAD:		
GRAVITY REACTION =	0	0
E. CONNECTION TO WALL DATA:		
Connection Number (See Schedule):	1 + 2	3
Uplift Capacity Ucap =	1,155	11,150
Horizontal Capacity F2cap =	610	0
Gravity Capacity Gcap =	0	0
F. CAPACITY CHECK:		
F.1. ***Based on "Compo.-Cladd." Combination***		
UPLIFT (Truss + Wall) =	**O.K.**	**O.K.**
HORIZ. (Truss + Wall) =	**O.K.**	**O.K.**
F.2. ***Based on "Main-Frame" Combination***		
UPLIFT Ucalc/Ucap =	0.21	0.53
HORIZ. Hcalc/Hcap =	0.48	0.00
Sum U + H =	0.68	0.53
Is SUM < 1.00 ??	**O.K.**	**O.K.**
GRAV Gcalc/Gcap=	0.00	0.00

G.D. Klieger, Inc. - Consulting Structural Engineers
1909 Harrison St., Ste 204, Hollywood, FL 33020
P: 954-923-2111 F: 954-923-4949
Gershon D. Klieger, PE FL. PE#36109 K9006

TRUSS TO WALL CONNECTION (FOR COMBINED UPLIFT + HORIZONTAL REACTIONS:

PROJECT: ROOF REPLACEMENT
1404 JACKSON ST., HOLLYWOOD, FL 01/23/2009

					CAPACITY PROVIDED	MAX C&C	CALC. MFWR	54 Edition USP CAT. PAGE #:
1	"USP" ***UPLIFT***	**RT20T**	(7)-16d NAILS TO TRUSS (4) 3/16" Diam. TAPCONS TO CONC>	Uplift=	1,225	550	240	85
2	"USP" ***LATERAL***	**JA3**	(4)-10d x 1-1/2" NAILS EA. LEG	Lateral= (F1)	610	500	240	72
3	"USP"	**USC4**	(8)-16d NAILS - WOOD ""GT" (4)-3/4" WEDGE BOLTS-CONC. (5" EMBEDDED)	Uplift=	11,150	9,900	5,950	163
4	"SIMPSON"	**VTC2** @48" O.C. MAX.	(4)-10d NAILS - TRUSS (5)-10dx 1-1/2 NAILS - VALLEY TRUSS	Uplift=	405	300	190	145 SIMPSON (2006)

****** AT ALL PIGGY-BACK TRUSS CONN'S.***

SEE PLAN AND SECTION DETAILS FOR ALL OTHER CONNECTORS NOT SPECIFIED HEREIN.

GD KLIEGER INC
1909 HARRISON ST., STE 204
HOLLYWOOD, FL 33020
P: 954.923.2111
Gershon Klieger, PE #36109

Title : 1404 JACKSON ST. Job # K9006
Dsgnr: Gershon Klieger PE #36109
Project Desc.:
Project Notes :

Printed: 3 JAN 2009, 11:23AM
File: K:\Documents\ENERCALC Data Files\acumpled.ec6
ENERCALC, INC. 1983-2006, Ver: 6.0.20, Lic: KW-06005211

Steel Column

Lic. # : KW-06005211 License Owner : G.D. KLIEGER INC

Description : NEW ADDED 3" PIPE COLUMN (x4 LOCATIONS) TO SUPPORT NEW GT REACTION

General Information

Code Ref : 2006 IBC, AISC Manual 13th Edition

Steel Section Name :	HSS 3X0.250
Analysis Method :	2006 IBC & ASCE 7-05
Steel Stress Grade	
Fy : Steel Yield	36.0 ksi
E : Elastic Bending Modulus	29,000.0 ksi
Load Combination :	Allowable Stress

Overall Column Height 9.0 ft
Top & Bottom Fixity Top & Bottom Pinned

Brace condition for deflection (buckling) along columns :
X-X (width) axis : Fully braced against buckling along X-X Axis
Y-Y (depth) axis : Fully braced against buckling along Y-Y Axis

Applied Loads

Service loads entered. Load Factors will be applied for calculations.

Column self weight included : 66.1453 lbs * Dead Load Factor
AXIAL LOADS . . .
Axial Load at 9.0 ft, D = 7.0, L = 8.0 k

DESIGN SUMMARY

Bending & Shear Check Results

PASS Max. Axial+Bending Stress Ratio = 0.34429 : 1
Load Combination +D+L+H
Location of max.above base 0.0 ft
At maximum location values are . . .
Pu : Axial 15.0662 k
Pn / Omega : Allowable 43.7605 k
Mu-x : Applied 0.0 k-ft
Mn-x / Omega : Allowable 3.2156 k-ft
Mu-y : Applied 0.0 k-ft
Mn-y / Omega : Allowable 3.2156 k-ft

PASS Maximum Shear Stress Ratio = 0.0 : 1
Load Combination
Location of max.above base 0.0 ft
At maximum location values are . . .
Vu : Applied 0.0 k
Vn / Omega : Allowable 0.0 k

Maximum SERVICE Load Reactions . .

Top along X-X	0.0 k
Bottom along X-X	0.0 k
Top along Y-Y	0.0 k
Bottom along Y-Y	0.0 k

Maximum SERVICE Load Deflections . . .

Along Y-Y 0.0 in at 0.0 ft above base
for load combination :

Along X-X 0.0 in at 0.0 ft above base
for load combination :

SCANNED JAN 13 2011 BUILDING DIV.

G.D. KLIEGER, INC.
1909 Harrison Street, Suite 204
Hollywood, Florida 33020
P: (954) 923-2111 F: (954) 923-4949

JOB 1404 JACKSON ST. K9006
SHEET NO. ____ OF ____
CALCULATED BY CDK. DATE 1.23.09.
CHECKED BY ____ DATE ____
SCALE ____

LOAD ON UNDERPINNING HELICAL PILE

GRAVITY: ROOF AREA = $\frac{33'}{2} \times \frac{32'}{2} = 265\ FT^2$

LL = 30 PSF
DL: 25 PSF
55 PSF x 265 = 14.6 KIPS. (DL+LL)

UPLIFT: ROOF AREA = 265 FT^2

CALC. WIND UPLIFT: (MAIN FORCE) = ~ PSF
UPLIFT = 36 x 265 = (9.55) KIPS ↑.

DL:
ROOF = 8 PSF x 265 FT^2 = 2.1 K
10' WALL x 4' = 60 x 10 x 4 = 2.4 K
(4.5 K)

(REQ'D CAPACITY) NET UPLIFT ON PILE = $\frac{W - 0.6\,DL}{9.55 - 4.5 \times 0.6} = 6.9$ KIPS.

SPECIFY PILE: GRAVITY = 8 TON
CAPACITY UPLIFT = 4.5 TON

SCANNED JAN 13 2010 BUILDING DIV

There is no plumbing involved in the remodeling permit # B09100360 at 1404 Jackson St. Hwd.

Joe Hartigan

JOE HARTIGAN

2-9-09

CGC 150 9640

APPROVED

FEB 11 2009

CITY OF HOLLYWOOD, FLA.
PLUMBING

SCANNED
BUILDING DIV

NEW TILE USED.
THNX

MIAMI-DADE

BUILDING CODE COMPLIANCE OFFICE (BCCO)
PRODUCT CONTROL DIVISION

MIAMI-DADE COUNTY, FLORIDA
METRO-DADE FLAGLER BUILDING
140 WEST FLAGLER STREET, SUITE 1603
MIAMI, FLORIDA 33130-1563
(305) 375-2901 FAX (305) 375-2908

NOTICE OF ACCEPTANCE (NOA)

APPROVED
APR 9 2010
CITY OF HOLLYWOOD, FLA.
STRUCTURAL

U.S. Tile
10650 NW 123 St Road
Medley, FL. 33178

SCOPE:
This NOA is being issued under the applicable rules and regulations governing the use of construction materials. The documentation submitted has been reviewed by the BCCO and accepted by the Building Code and Product Review Committee to be used in Miami Dade County and other areas where allowed by the Authority Having Jurisdiction (AHJ).

This NOA shall not be valid after the expiration date stated below. The Miami-Dade County Product Control Division (In Miami Dade County) and/or the AHJ (in areas other than Miami Dade County) reserve the right to have this product or material tested for quality assurance purposes. If this product or material fails to perform in the accepted manner, the manufacturer will incur the expense of such testing and the AHJ may immediately revoke, modify, or suspend the use of such product or material within their jurisdiction. BORA reserves the right to revoke this acceptance, if it is determined by Miami-Dade County Product Control Division that this product or material fails to meet the requirements of the applicable building code.

This product is approved as described herein, and has been designed to comply with the Florida Building Code, including the High Velocity Hurricane Zone of the Florida Building Code.

DESCRIPTION: Real 'S' Clay Tile

LABELING: Each unit shall bear a permanent label with the manufacturer's name or logo, city, state and following statement: "Miami-Dade County Product Control Approved", unless otherwise noted herein.

RENEWAL of this NOA shall be considered after a renewal application has been filed and there has been no change in the applicable building code negatively affecting the performance of this product.

TERMINATION of this NOA will occur after the expiration date or if there has been a revision or change in the materials, use, and/or manufacture of the product or process. Misuse of this NOA as an endorsement of any product, for sales, advertising or any other purposes shall automatically terminate this NOA. Failure to comply with any section of this NOA shall be cause for termination and removal of NOA.

ADVERTISEMENT: The NOA number preceded by the words Miami-Dade County, Florida, and followed by the expiration date may be displayed in advertising literature. If any portion of the NOA is displayed, then it shall be done in its entirety.

INSPECTION: A copy of this entire NOA shall be provided to the user by the manufacturer or its distributors and shall be available for inspection at the job site at the request of the Building Official.

This revises NOA# 05-1019.02 and consists of pages 1 through 9.
The submitted documentation was reviewed by Alex Tigera.

MIAMI-DADE COUNTY APPROVED

SCANNED JAN 13 2011

NOA No.: 06-1213.04
Expiration Date: 04/13/11
Approval Date: 09/18/08

ROOFING ASSEMBLY APPROVAL

Category:	Roofing
Sub-Category:	07320 Roofing Tiles
Material:	Clay
Deck Type:	Wood

1. SCOPE

This approves a new roofing system using "Real 'S' Clay Tile" as manufactured by U.S. Tile and described in Section 2 of this Notice of Acceptance. For locations where the pressure requirements, as determined by applicable Building Code does not exceed the design pressure values obtained by calculations in compliance with RAS 127 using the values listed in section 4 herein. The attachment calculations shall be done as a moment based system.

2. PRODUCT DESCRIPTION

Manufactured by Applicant	Dimensions	Test Specifications	Product Description
Real 'S' Tile	L = 18.25" W = 12.5"	ASTM C1167	High profile clay roof tile. For direct deck or battened nail-on applications.
Trim Pieces	l = varies w = varies varying thickness	ASTM C1167	Accessory trim, clay roof pieces for use at hips, rakes, ridges and valley terminations. Manufactured for each tile profile.

2.1 SUBMITTED EVIDENCE:

Test Agency	Test Identifier	Test Name/Report	Date
PRI Construction Materials Technology	UST-005-02-01	TAS 101	Mar. 2008
IBA Consultants, Inc.	4318-15	ASTM C 1167	Aug. 2007
IBA Consultants, Inc.	4318-30	TAS 101	June 2008
Redland Technologies	7161-03 Appendix III	Static Uplift Testing PA 102 & 102(A)	Dec. 1991
Redland Technologies	Letter Dated Aug. 1, 1994	Wind Tunnel Testing PA 108 (Nail-On)	Aug. 1994
Redland Technologies	P09647-01	Wind Tunnel Testing PA 108 (Mortar Set)	Aug. 1994
Redland Technologies	P0402	Withdrawal Resistance Testing of screw vs. smooth shank nails	Sept. 1993
The Center for Applied Engineering, Inc.	94-083	Static Uplift Testing PA 101 (Adhesive Set)	April 1994

The Center for Applied Engineering, Inc.	94-084	Static Uplift Testing PA 101 (Mortar Set)	May 1994
The Center for Applied Engineering, Inc.	25-7094-(3, 6 & 9)	Static Uplift Testing PA 102	Oct. 1994
The Center for Applied Engineering, Inc.	25-7120-(1 & 2)	Static Uplift Testing PA 102	Nov. 1994
The Center for Applied Engineering, Inc.	25-7183-(3 & 4)	Static Uplift Testing PA 102	Feb. 1995
The Center for Applied Engineering, Inc.	25-7214-(3, 4, &7)	Static Uplift Testing PA 102	March, 1995
The Center for Applied Engineering, Inc.	25-7804-4	Static Uplift Testing PA 102	Sep. 1996
Celotex Corporation Testing Services	520111-3	Static Uplift Testing PA 101	Dec. 1998
Celotex Corporation Testing Services	520191-2-1	Static Uplift Testing PA 101	March 1999

3. LIMITATIONS

3.1 Fire classification is not part of this acceptance.

3.2 For mortar or adhesive set tile applications, a static field uplift test shall be performed in accordance with TAS 106.

3.3 Applicant shall retain the services of a Miami-Dade County Certified Laboratory to perform quarterly test in accordance with TAS 112, appendix 'A'. Such testing shall be submitted to the Building Code Compliance Office for review.

3.4 Minimum underlayments shall be in compliance with the applicable Roofing Applications Standards listed section 4.1 herein.

3.5 30/90 hot mopped underlayment applications may be installed perpendicular to the roof slope unless stated otherwise by the underlayment material manufacturers published literature.

3.6 This acceptance is for wood deck applications. Minimum deck requirements shall be in compliance with applicable building code.

4. INSTALLATION

4.1 Real "S" Clay Tile and its components shall be installed in strict compliance with Roofing Application Standard RAS 118, RAS 119 and RAS 120.

4.2 Real "S" Clay Tile may be installed with various starter tile configurations in accordance with RAS 118, 119, 120 and/or the US Tile Faux starter tile system as detailed herein.

4.2.1 The US Tile Faux starter tile system uses the US Tile Mission Clay Barrel tile with a current NOA as the starter course as described below which is then proceed by the Real S tile for the remainder of the roof.

4.2.1.1 The US Tile Faux starter system can be installed with starter barrel pan and cap tiles set in a full bed of adhesive and/or mortar. **See Detail B.**

4.2.1.2 One or more additional booster tiles made from the US Tile Mission Clay Barrel may be installed to achieve the desired aesthetics. The booster pieces shall have a minimum length of three inch and shall be installed in a full bed of adhesive and/or mortar or mechanically fastened with any approved #12 pan head insulation screw of sufficient length to penetrate 3/16 of an inch through the sheeting. **See Detail C.**

4.3 Data For Attachment Calculations

Table 1: Average Weight (W) and Dimensions (l x w)

Tile Profile	Weight-W (lbf)	Length-l (ft)	Width-w (ft)
Real 'S' Clay Tile	8.3	1.54	1.02

Table 2: Aerodynamic Multipliers - λ (ft^2)

Tile Profile	λ (ft^2) Direct Deck Application
Real 'S' Clay Tile	0.310

Table 3: Restoring Moments due to Gravity - M_g (ft-lbf)

Tile Profile	2":12"	3":12"	4":12"	5":12"	6":12"	Greater than 7":12"
Real 'S' Clay Tile	Direct Deck	Direct Deck	Direct Deck	Direct Deck	Direct Deck	Direct Deck
	5.71	5.63	5.51	5.34	5.12	4.83

Table 4: Attachment Resistance Expressed as a Moment - M_f (ft-lbf) for Nail-On Systems			
Tile Profile	**Fastener Type**	**Direct Deck (min 15/32" plywood)**	**Direct Deck (min. 19/32" plywood)**
Real 'S' Clay Tile	2-10d Ring Shank Nails	28.6	41.2
	1-10d Smooth or Screw Shank Nail	5.1	6.8
	2-10d Smooth or Screw Shank Nails	6.9	9.2
	1 #8 Screw	20.7	20.7
	2 #8 Screw	43.2	43.2
	1-10d Smooth or Screw Shank Nail (Field Clip)	23.1	23.1
	1-10d Smooth or Screw Shank Nail (Eave Clip)	29.3	29.3
	2-10d Smooth or Screw Shank Nails (Field Clip)	27.6	27.6
	2-10d Smooth or Screw Shank Nails (Eave Clip)	38.1	38.1
	2-10d Ring Shank Nails[1]	33.1	48.1

1. Installation with a 3" tile headlap and fasterners are located a min. of 2½" from head of tile.

Table 5: Attachment Resistance Expressed as a Moment M_f (ft-lbf) for Two Patty Adhesive Set Systems		
Tile Profile	**Tile Application**	**Minimum Attachment Resistance**
Real 'S' Clay Tile	Polyfoam PolyPro™[1] - Average weight per patty 10 grams.	47.9
	TileBond[1] – Average weight per patty 8 grams.	36.5

1 See manufactures component approval for installation requirements.

Table 5A: Attachment Resistance Expressed as a Moment - M_f (ft-lbf) for Single Patty Adhesive Set Systems		
Tile Profile	**Tile Application**	**Minimum Attachment Resistance**
Real 'S' Clay Tile	Polyfoam PolyPro™, average patty weight 63 grams	62.10
	Polyfoam PolyPro™, average patty weight 24 grams	38.70
	Polyfoam PolyPro™, average patty weight 58.7 grams	51.28

Table 5B: Attachment Resistance Expressed as a Moment - M_f (ft-lbf) for Mortar Set Systems		
Tile Profile	**Tile Application**	**Attachment Resistance**
Real 'S' Clay Tile	Mortar Set[5]	24.5

5 Tile-Tile Roof Tile Mortar.

SCANNED

5. LABELING

5.1 All tiles shall bear the imprint or identifiable marking of the manufacturer's name or logo as detailed below, or following statement: "Miami-Dade County Product Control Approved".

TRINIDAD UST

LABEL FOR REAL 'S' CLAY TILE
(LOCATED ON THE UNDERSIDE OF TILE)

6. BUILDING PERMIT REQUIREMENTS

6.1 Application for building permit shall be accompanied by copies of the following:

6.1.1 This Notice of Acceptance.

6.1.2 Any other documents required by the Building Official or applicable building code in order to properly evaluate the installation of this system.

PROFILE DRAWING
DETAIL A

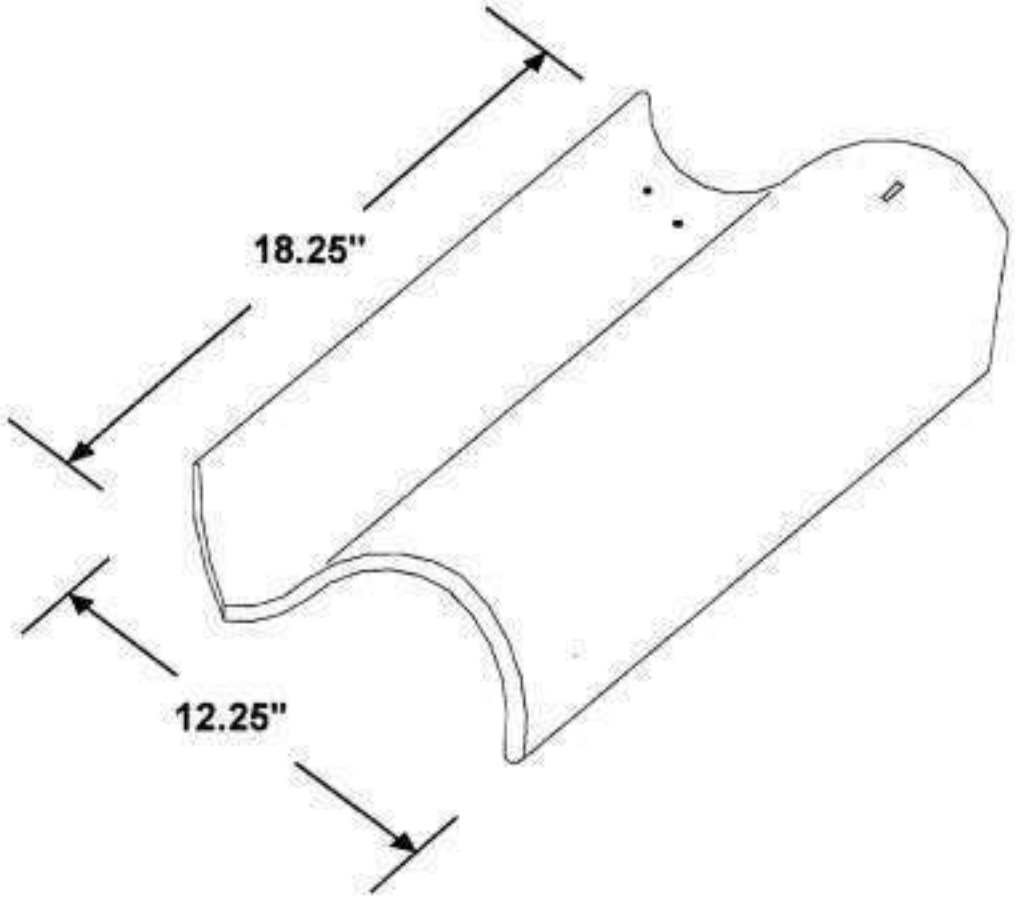

REAL 'S' CLAY TILE

MIAMI-DADE COUNTY APPROVED

SCANNED

DETAIL B

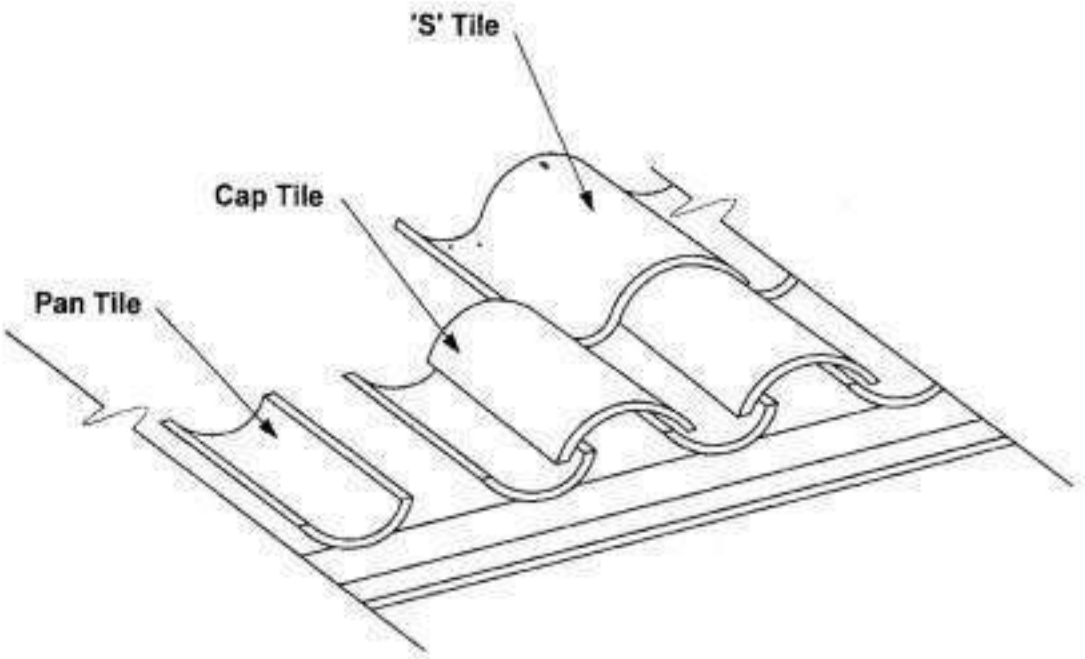

FAUX STARTER SYSTEM WITH BARREL PAN AND CAP TILE

DETAIL C

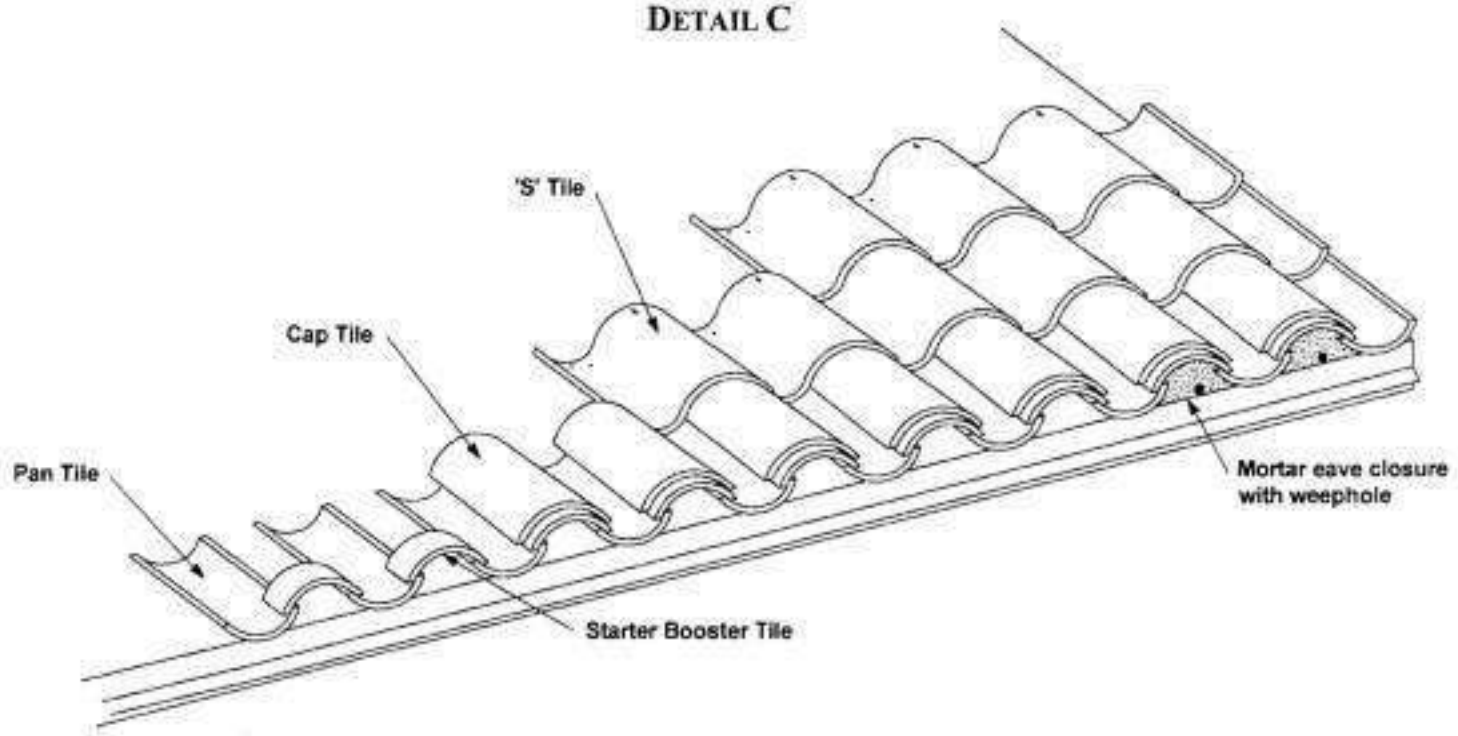

FAUX STARTER SYSTEM WITH BOOSTER TILE(S) AND BARREL PAN AND CAP TILE

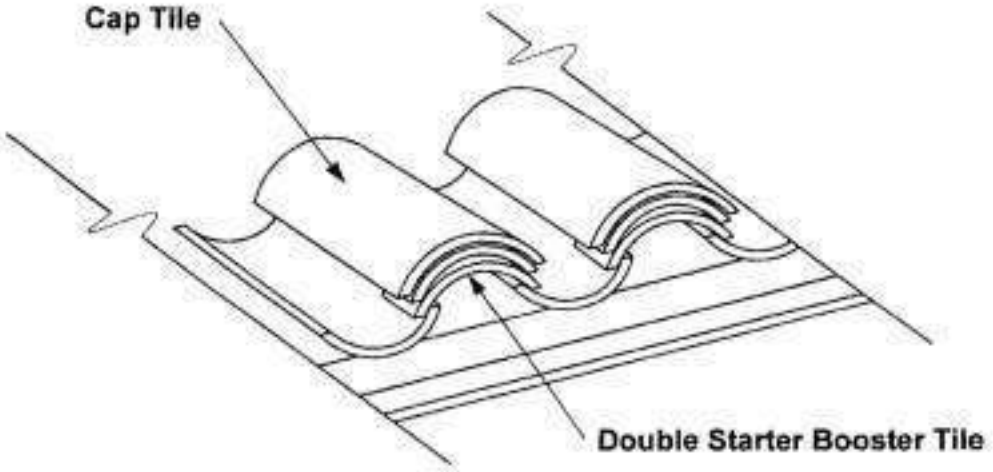

MULTIPLE BOOSTER TILE STARTER DETAIL

END OF THIS ACCEPTANCE

FLORIDA ENGINEERING & TESTING, INC.

Phone: (866) 781-6889 • Fax: (866) 784-8550
www.floridaengineeringandtesting.com
250 S.W. 13th Avenue
Pompano Beach, FL 33069

March 24, 2010

Job Order No.: 10-871HJ
Permit No.: B09-102851

Ed Hobel Roofing
2121 N.W. 45th Avenue
Coconut Creek, Florida 33066

APPROVED
APR 9 2010
CITY OF HOLLYWOOD, FLA.
STRUCTURAL

RE: TAS-106 TILE UPLIFT TESTS
Proposed Roof
1404 Jackson Street
Hollywood, Florida

Dear Sir or Madam:

In accordance with your authorization, Florida Engineering & Testing Inc., has performed Tile Uplift Testing in compliance with Testing Application Standards **TAS-106** and the Florida Building Code High Velocity Hurricane Zone on March 23, 2010, at the above referenced project.

The purpose of our inspection was to determine the uplift capacity of the roof tiles for the residence at the above referenced project. The subject roof consisted of Concrete S Shaped Tile Foam Set. The pitch of the subject roof is 4/12.

Our field engineer's representative visited the site and conducted sixty-four (64) uplift tests on the roof tiles. All tests were performed according to the Florida Building Code High Velocity Hurricane Zone and protocol **TAS-106** using an Intercomp scale model CS200. The following is a summary of results:

Field Test Results

Test Number	Test Location	Field Uplift Pull Test	Test Result
1 - 15 Corner	See Attached Diagram	35 ± 5 pounds	Passed
16 - 42 Perimeter	See Attached Diagram	35 ± 5 pounds	Passed
43 - 56 Field	See Attached Diagram	35 ± 5 pounds	Passed
57 - 64 Ridge & Hip	See Attached Diagram	35 ± 5 pounds	Passed

SCANNED
Quality QA Assurance

All test results were found to be in compliance with **TAS-106** and the Florida Building Code (see attached field sketch).

The test results are limited to the tested areas. If other roof areas exhibit different conditions, it should be brought to our attention for remedial work. This uplift test is not a final roof inspection. A final roof inspection must be conducted by the building official for approval.

The test results presented reflect the condition of the roof system at the time of the test. These results are time and sample dependent since roof conditions are continuously changing due to exposure to the elements.

Florida Engineering & Testing, Inc. (FE&T) is an independent third party providing unbiased testing information and results. FE&T is not affiliated with our client nor do we have any financial interest in the project or determination of the test results.

As mutual protection to clients, the public and ourselves, all reports are submitted as the confidential property of clients, and authorization for publication of statements, conclusions or extracts from or regarding our reports is reserved pending our written approval.

Florida Engineering & Testing, Inc., appreciates the opportunity to be of service to you at this phase of your project. If you have any questions or comments, please give us a call. We would be pleased to help in any way we can. It has been a pleasure working with you and look forward to doing so again in the near future.

Sincerely,

Reza Javidan 3/24/10

Reza Javidan, P.E.
Florida Engineering & Testing, Inc.
Florida Reg. No. 60223
Certificate of Authorization No. 6923

SCANNED
BUILDING DIV

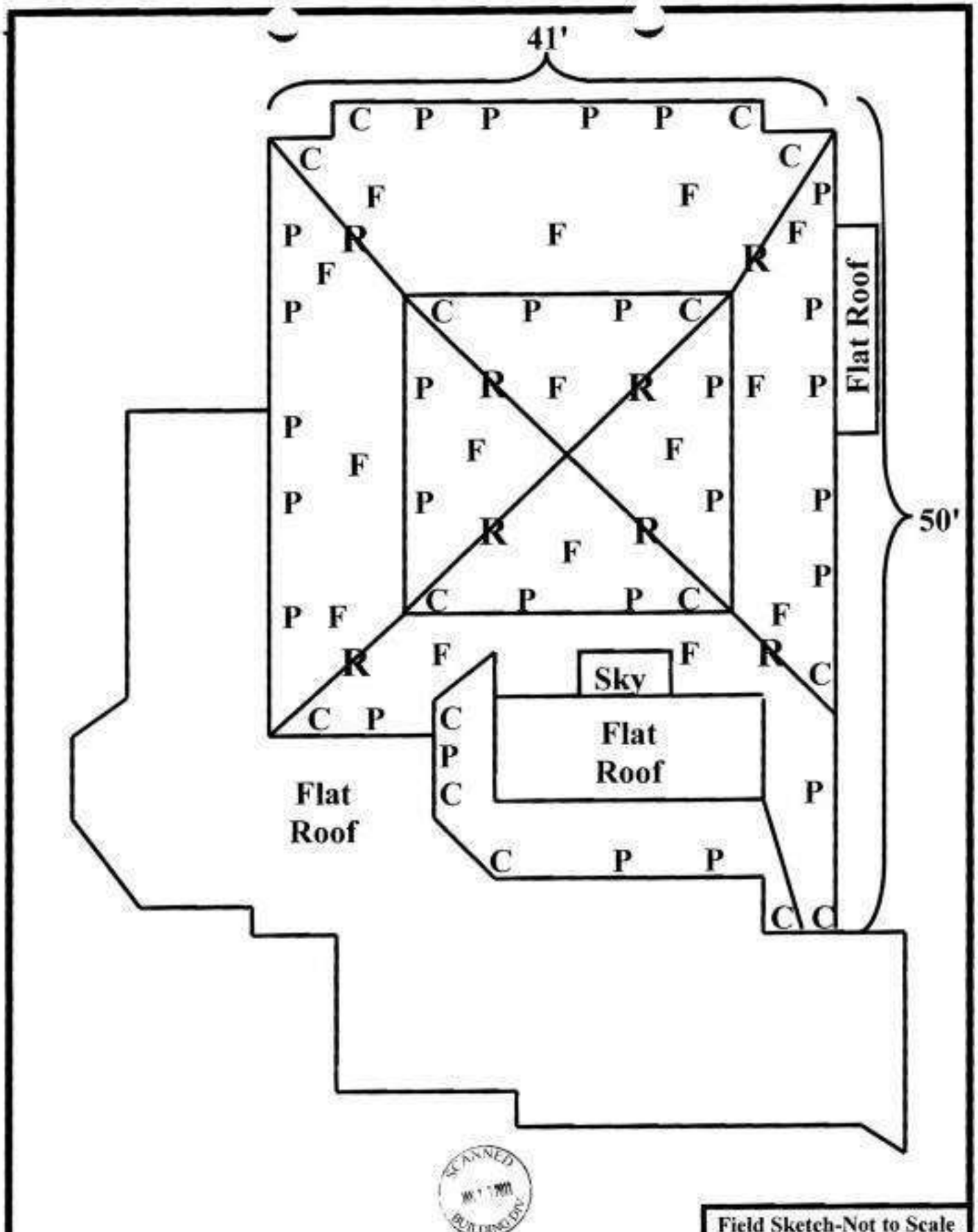

SCANNED
BUILDING DEV

a=0.1W=0.1 x 41=4.1'
a=0.4H=0.4 x 30=12'
Perimeter Dimensions=4'6"

Field Sketch-Not to Scale
Approximate Dimensions
1404 Jackson Street
Hollywood, Florida

SECTION 1525
HIGH-VELOCITY HURRICANE ZONES UNIFORM PERMIT APPLICATION

Florida Building Code Edition 2004
High-Velocity Hurricane Zone Uniform Permit Application Form.

INSTRUCTION PAGE

COMPLETE THE NECESSARY SECTIONS OF THE UNIFORM ROOFING PERMIT APPLICATION FORM AND ATTACH THE REQUIRED DOCUMENTS AS NOTED BELOW:

Roof System	Required Sections of the Permit Application Form	Attachments Required See List Below
Low Slope Application	A,B,C	1,2,3,4,5,6,7
Prescriptive BUR-RAS 150	A,B,C	4,5,6,7
Asphaltic Shingles	A,B,D	1,2,4,5,6,7
Concrete or Clay Tile	A,B,D,E	1,2,3,4,5,6,7
Metal Roofs	A,B,D	1,2,3,4,5,6,7
Wood Shingles and Shakes	A,B,D	1,2,4,5,6,7
Other	As Applicable	1,2,3,4,5,6,7

ATTACHMENTS REQUIRED:

1. Fire Directory Listing Page
2. From Product Approval:
   - Front Page
   - Specific System Description
   - Specific System Limitations
   - General Limitations
   - Applicable Detail Drawings
3. Design Calculations per Chapter 16, or if Applicable, RAS 127 or RAS 128
4. Other Component of Product Approval
5. Municipal Permit Application
6. Owners Notification for Roofing Considerations (Reroofing Only)
7. Any Required Roof Testing/Calculation Documentation

RECEIVED
JUL 14 2009
HOLLYWOOD, FLA.
BUILDING

SCANNED

Florida Building Code Edition 2004

High-Velocity Hurricane Zone Uniform Permit Application Form.

Section A (General Information)

Master Permit No. **Process No.**

Contractor's Name

Job Address

ROOF CATEGORY

☐ Low Slope ☐ Mechanically Fastened Tile ☐ Mortar/Adhesive Set Tile

☐ Asphaltic Shingles ☐ Metal Panel/Shingles ☐ Wood Shingles/Shakes

☐ Prescriptive BUR-RAS 150

APPROVED JUN 5 2009 OFFICE OF PLANNING

ROOF TYPE

☑ New Roof ☐ Reroofing ☐ Recovering ☐ Repair ☐ Maintenance

ROOF SYSTEM INFORMATION

Low Slope Roof Area (SF)	Steep Sloped Roof Area (SF)	Total (SF)
N/A	1,000	1,000

Section B (Roof Plan)

Sketch Roof Plan: Illustrate all levels and sections, roof drains, scuppers, overflow scuppers and overflow drains. Include dimensions of sections and levels, clearly identify dimensions of elevated pressure zones and location of parapets.

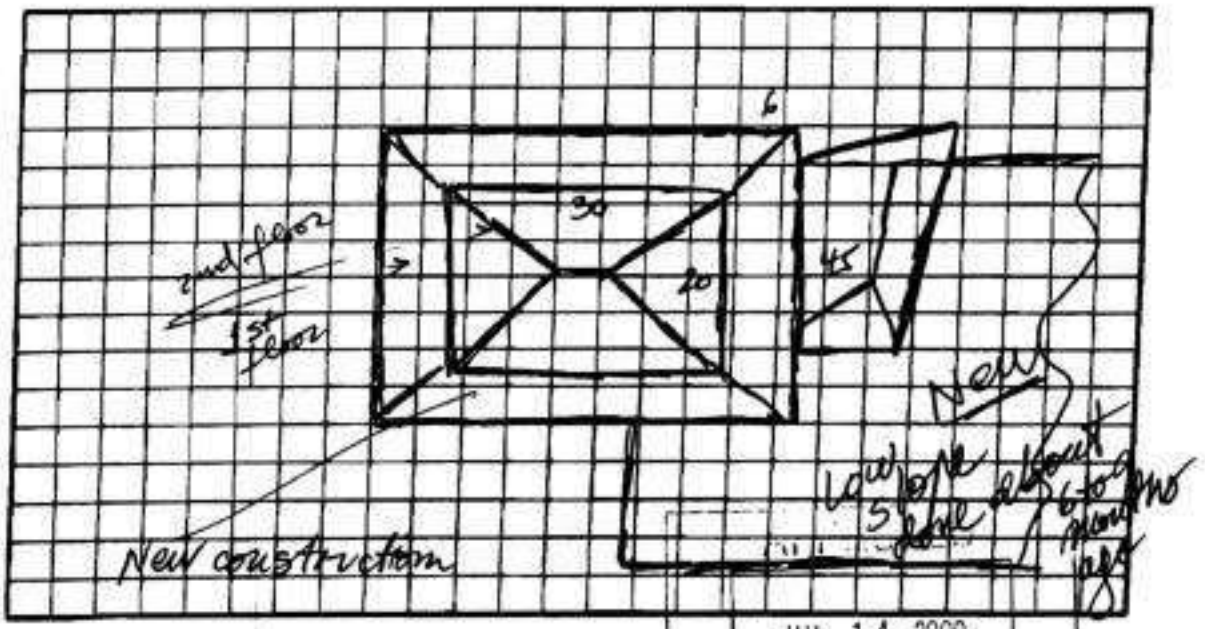

JUL 14 2009

CITY OF HOLLYWOOD, FLA. STRUCTURAL

SCANNED BUILDING

Florida Building Code Edition 2004

High-Velocity Hurricane Zone Uniform Permit Application Form.

Section C (Low Slope Application)

Fill in specific roof assembly components and identify manufacturer (If a component is not used, identify as "NA")

System Manufacturer: _____

Product Approval No.: _____

Design Wind Pressures, From RAS 128 or Calculations:

Pmax1: _____ **Pmax2:** _____ **Pmax3:** _____

Max. Design Pressure, from the specific Product Approval system: _____

Deck:

Type: _____

Gauge/Thickness: _____

Slope: _____

Anchor/Base Sheet & No. of Ply(s): _____

Anchor/Base Sheet Fastener/Bonding Material:

_____

Insulation Base Layer: _____

Base Insulation Size and Thickness: _____

Base Insulation Fastener/Bonding Material:

_____

Top Insulation Layer: _____

Top Insulation Size and Thickness: _____

Top Insulation Fastener/Bonding Material:

_____

Base Sheet(s) & No. of Ply(s): _____

Base Sheet Fastener/Bonding Material:

_____

Ply Sheet(s) & No. of Ply(s): _____

Ply Sheet Fastener/Bonding Material:

_____

Top Ply: _____

Top Ply Fastener/Bonding Material:

Surfacing: N/A

Fastener Spacing for Anchor/Base Sheet Attachment:

Field: ____" oc ● Lap, # Rows ____ ● ____" oc

Perimeter: ____" oc ● Lap, # Rows ____ ● ____" oc

Corner: ____" oc ● Lap, # Rows ____ ● ____" oc

Number of Fasteners Per Insulation Board:

Field _____ **Perimeter** _____ **Corner** _____

Illustrate Components Noted and Details as Applicable:

Woodblocking, Gutter, Edge Termination, Stripping, Flashing, Continuous Cleat, Cant Strip, Base Flashing, Counter-Flashing, Coping, Etc.

Indicate: Mean Roof Height, Parapet Height, Height of Base Flashing, Component Material, Material Thickness, Fastener Type, Fastener Spacing or Submit

N/A

▲

FT.

Parapet Height

FT.

Mean Roof Height

▼

SCANNED

Florida Building Code Edition 2004

High-Velocity Hurricane Zone Uniform Permit Application Form.

Section D (Steep Sloped Roof System)

Roof System Manufacturer: Monier Lifetile, LLC.

Notice of Acceptance Number: 07-1023.06

Minimum Design Wind Pressures, If Applicable (From RAS 127 or Calculations): P1: -52 P2: -87.3 P3: -131.4

Maximum Design Pressure (From the Product Approval Specific System):

Steep Sloped Roof System Description

Deck Type: Plywood CDX 5/8 inch thick - new

Type Underlayment: 30 ASTM - Nailed tin caps & ring shank nails 2 rows - 12 o.c - laps 6 o.c

Roof Slope: 4 : 12

Insulation: N/A

Fire Barrier: N/A

Ridge Ventilation? N/A

Fastener Type & Spacing: 11 GA. - 2 RWS - 12" o.c Laps 6" - 6" o.c

Adhesive Type: Polyfoam

Type Cap Sheet: Fast 90 - Tarco -

Mean Roof Height: 16'-

Roof Covering: Monier Tile - Espana

Type & Size Drip Edge: 3x3 26 GA Galv nailed 4" o.c w/ 1 1/4 ring shank nails

APPROVED

JUL 14 2009

CITY OF HOLLYWOOD, FLA. STRUCTURAL

SCANNED

Florida Building Code Edition 2004

High Velocity Hurricane Zone Uniform Permit Application Form

Section E (Tile Calculations)

For Moment based tile systems, choose either Method 1 or 2. Compare the values for M_r with the values from M_f. If the M_f values are greater than or equal to the M_r values for each area of the roof, then the tile attachment method is acceptable.

Method 1 "Moment Based Tile Calculations Per RAS 127"

(P_1: 52 Xλ ____ = 87.3) - Mg: 131.4 = M_{r1} ____ NOA M_f ____

(P_2: ____ Xλ ____ = ____) - Mg: ____ = M_{r2} ____ NOA M_f ____

(P_3: ____ Xλ ____ = ____) - Mg: ____ = M_{r3} ____ NOA M_f ____

Method 2 "Simplified Tile Calculation Per Table Below"

Required Moment of Resistance (M_r) From Table Below : 32.2 Product Approval M_f 38.7

M_r Required Moment Resistance*					
Mean Roof Height → / Roof Slope ↓	15'	20'	25'	30'	40'
2:12	34.4	36.5	38.2	39.7	42.2
3:12	32.2	34.4	36.0	37.4	39.8
4:12	~~30.4~~	32.2	33.8	35.1	37.3
5:12	28.4	30.1	31.6	32.8	34.9
6:12	26.4	28.0	29.4	30.5	32.4
7:12	24.4	25.9	27.1	28.2	30.0

*Must be used in conjunction with a list of Moment Based Tile Systems endorsed by the Broward County Board of Rules and Appeals.

For Uplift Based Tile Systems use Method 3. Compare the values for F' with the values for F_r. If the F' values are greater than or equal to the F_r values for each area of the roof, then the tile attachment method is acceptable.

Method 3 "Uplift Based Tile Calculations Per RAS 127"

(P_1: ____ x l: ____ = ____ x w:= ____) - W: ____ x cos θ: ____ = Fr_1: ____ Product Approval F' ____

(P_2: ____ x l: ____ = ____ x w:= ____) - W: ____ x cos θ: ____ = Fr_2: ____ Product Approval F' ____

(P_3: ____ x l: ____ = ____ x w:= ____) - W: ____ x cos θ: ____ = Fr_3: ____ Product Approval F' ____

Where to Obtain Information		
Description	**Symbol**	**Where To Find**
Design Pressure	P_1 or P_2 or P_3	RAS 127 Table 1 or by an engineering analysis prepared by PE based on ASCE 7
Mean Roof Height	H	Job Site
Roof Slope	θ	Job Site
Aerodynamic Multiplier	λ	Product Approval
Restoring Moment due to Gravity	M_g	Product Approval
Attachment Resistance	M_f	Product Approval
Required Moment Resistance	M_r	Calculated
Minimum Attachment Resistance	F'	Product Approval
Required Uplift Resistance	F_r	Calculated
Average Tile Weight	W	Product Approval
Tile Dimensions	l=length w=width	Product Approval
All calculations must be submitted to the Building Official at the time of permit application.		

APPROVED JUL 14 2009 ... FLA.

SCANNED JUN 13 2011

HIGH VELOCITY HURRICANE ZONES
REQUIRED OWNERS NOTIFICATION FOR ROOFING CONSIDERATIONS

1524.1 Scope. As it pertains to this section, it is the responsibility of the roofing contractor to provide the owner with the required roofing permit, and to explain to the owner the content of this section The provisions of Chapter 15 of the *Florida Building Code, Building* govern the minimum requirements and standards of the industry for roofing system installations. Additionally, the following items should be addressed as part of the agreement between the owner and the contractor. The owner's initial in the designated space indicates that the item has been explained.

1. **Aesthetics-Workmanship:** The workmanship provisions of Chapter 15 (High Velocity Hurricane Zone) are for the purpose of providing that the roofing system meets the wind resistance and water intrusion performance standards. Aesthetics (appearance) are not a consideration with respect to workmanship provisions. Aesthetic issues such as color or architectural appearance, that are not part of a zoning code, should be addressed as part of the agreement between the owner and the contractor.
2. **Renailing Wood Decks:** When replacing roofing, the existing wood roof deck may have to be renailed in accordance with the current provisions of Chapter 16 (High Velocity Hurricane Zones) of the. (The roof deck is usually concealed prior to removing the existing roof system).
3. **Common Roofs:** Common roofs are those which have no visible delineation between neighboring units (i.e., townhouses, condominiums, etc.). In buildings with common roofs, the roofing contractor and/or owner should notify the occupants of adjacent units of roofing work to be performed.
4. **Exposed ceilings:** Exposed, open beam ceilings are where the underside of the roof decking can be viewed from below. The owner may wish to maintain the architectural appearance; therefore, roofing nail penetrations of the underside of the decking may not be acceptable. The provides the option of maintaining this appearance.
5. **Ponding Water:** The current roof system and/or deck of the building may not drain well and may cause water to pond (accumulate) in low-lying areas of the roof Ponding can be an indication of structural distress and

may require the review of a professional structural engineer. Ponding may shorten the life expectancy and performance of the new roofing system. Ponding conditions may not be evident until the original roofing system is removed. Ponding conditions should be corrected.

6. **Overflow Scuppers (wall outlets):** It is required that rainwater flow off so that the roof is not overloaded from a buildup of water. Perimeter/edge walls or other roof extensions may block this discharge if overflow scuppers (wall outlets) are not provided. It may be necessary to install overflow scuppers in accordance with the requirements of:
7. **Ventilation:** Most roof structures should have some ability to vent natural airflow through the interior of the structural assembly (the building itself). The existing amount of attic ventilation shall not be reduced. It may be beneficial to consider additional venting which can result in extending the service life of the roof.

Mathias Kaudolf — May 12, 2009

Owner's/Agent's Signature Date Contractor's Signature

APPROVED
JUL 14 2009
CITY OF WILLIAMSTON, FLA.

MIAMI-DADE

BUILDING CODE COMPLIANCE OFFICE (BCCO)
PRODUCT CONTROL DIVISION

MIAMI-DADE COUNTY, FLORIDA
METRO-DADE FLAGLER BUILDING
140 WEST FLAGLER STREET, SUITE 1603
MIAMI, FLORIDA 33130-1563
(305) 375-2901 FAX (305) 375-2908

NOTICE OF ACCEPTANCE (NOA)

Monier Lifetile, LLC
200 Story Road
Lake Wales, FL 33898

SCOPE:
This NOA is being issued under the applicable rules and regulations governing the use of construction materials. The documentation submitted has been reviewed by Miami-Dade County Product Control Division and accepted by the Board of Rules and Appeals (BORA) to be used in Miami Dade County and other areas where allowed by the Authority Having Jurisdiction (AHJ).

This NOA shall not be valid after the expiration date stated below. The Miami-Dade County Product Control Division (In Miami Dade County) and/or the AHJ (in areas other than Miami Dade County) reserve the right to have this product or material tested for quality assurance purposes. If this product or material fails to perform in the accepted manner, the manufacturer will incur the expense of such testing and the AHJ may immediately revoke, modify, or suspend the use of such product or material within their jurisdiction. BORA reserves the right to revoke this acceptance, if it is determined by Miami-Dade County Product Control Division that this product or material fails to meet the requirements of the applicable building code.

This product is approved as described herein, and has been designed to comply with the Florida Building Code including the High Velocity Hurricane Zone of the Florida Building Code.

DESCRIPTION: Espana Concrete Roof Tile

LABELING: Each unit shall bear a permanent label with the manufacturer's name or logo, city, state and following statement: "Miami-Dade County Product Control Approved", unless otherwise noted herein.

RENEWAL of this NOA shall be considered after a renewal application has been filed and there has been no change in the applicable building code negatively affecting the performance of this product.

TERMINATION of this NOA will occur after the expiration date or if there has been a revision or change in the materials, use, and/or manufacture of the product or process. Misuse of this NOA as an endorsement of any product, for sales, advertising or any other purposes shall automatically terminate this NOA. Failure to comply with any section of this NOA shall be cause for termination and removal of NOA.

ADVERTISEMENT: The NOA number preceded by the words Miami-Dade County, Florida, and followed by the expiration date may be displayed in advertising literature. If any portion of the NOA is displayed, then it shall be done in its entirety.

INSPECTION: A copy of this entire NOA shall be provided to the user by the manufacturer or its distributors and shall be available for inspection at the job site at the request of the Building Official.

This renews NOA 02-1205.04 and consists of pages 1 through 6.
The submitted documentation was reviewed by Alex Tigera.

APPROVED
JUL 14 2009
CITY OF HOLLYWOOD, FL
STRUCTURAL

NOA No.: 07-1023.06
Expiration Date: 12/16/12
Approval Date: 12/20/07

SCANNED

ROOFING ASSEMBLY APPROVAL

Category: Roofing

Sub-Category: High Profile Roofing Tiles
Material: Concrete

1. SCOPE

This renews a system using **Monier Lifetile Espana Concrete Roof Tile**, as manufactured **Monier Lifetile LLC** in **Lake Wales, FL**. and described in Section 2 of this Notice of Acceptance. For locations where the pressure requirements, as determined by applicable Building Code does not exceed the design pressure values obtained by calculations in compliance with RAS 127 using the values listed in section 4 herein. The attachment calculations shall be done as a moment based system.

2. PRODUCT DESCRIPTION

Manufactured by Applicant	Dimensions	Test Specifications	Product Description
Monier Lifetile LLC Espana Tile	L = 17" W = 12 3/8" ½" thick	TAS 112	High profile, interlocking, one-piece, 'S' shaped, high-pressure extruded concrete roof tile equipped with two nail holes. For direct deck or battened nail-on, mortar set or adhesive set applications.
Trim Pieces	l = varies w = varies varying thickness	TAS 112	Accessory trim, concrete roof pieces for use at hips, rakes, ridges and valley terminations. Manufactured for each tile profile.□

2.1 SUBMITTED EVIDENCE:

Test Agency	Test Identifier	Test Name/Report	Date
Redland Technologies	7161-03 Appendix III	Static Uplift Testing PA 102 & PA 102(A)	Dec. 1991
Redland Technologies	7161-03 Appendix II	Wind Tunnel Testing PA 108(Nail-On)	Dec. 1991
Redland Technologies	P0402	Withdrawal Resistance Testing of screw vs. smooth shank nails	Sept. 1993
Redland Technologies	Letter Dated Aug. 1, 1994	Wind Tunnel Testing PA 108 (Nail-On)	Aug. 1994
Redland Technologies	P0631-01	Wind Tunnel Testing PA 108 (Mortar Set)	July 1994
The Center for Applied Engineering, Inc.	25-7688-3 25-7688-10	Static Uplift Testing PA 101 (Adhesive Set) PA 101 (Mortar Set)	June 1996 July 1996

Test Agency	Test Identifier	Test Name/Report	Date
The Center for Applied Engineering, Inc.	25-7688-5	Static Uplift Testing PA 102 (3" Headlap, Nails, Direct Deck, New Construction)□	June 1996
Celotex Corporation	520111-3	Static Uplift Testing	Dec. 1998
Testing Services	520191-2-1	PA 101	March 1999
Walker Engineering, Inc.	Calculations	Aerodynamic Multiplier	October 2007
Walker Engineering, Inc.	Calculations	Restoring Moment	August 2007
Walker Engineering, Inc.	Calculations	Two Patty Adhesive Set System	April 1999
Walker Engineering, Inc.	Evaluation Calculations	25-7183	March 1995
Walker Engineering, Inc.	Evaluation Calculations	25-7094	February 1996
Walker Engineering, Inc.	Evaluation Calculations	25-7496	April 1996
Walker Engineering, Inc.	Evaluation Calculations	25-7584 25-7804b-8 25-7804-4 & 5 25-7848-6	December 1996
Nutting Engineering	TAS-112	13343.1-134	June 2007

3. LIMITATIONS

3.1 Fire classification is not part of this acceptance.

3.2 For mortar or adhesive set tile applications, a static field uplift test shall be performed in accordance with RAS 106.

3.3 Applicant shall retain the services of a Miami-Dade County Certified Laboratory to perform quarterly test in accordance with TAS 112, appendix 'A'. Such testing shall be submitted to the Building Code Compliance Office for review.

3.4 Minimum underlayment shall be in compliance with the applicable Roofing Applications Standards listed section 4.1 herein.

3.5 30/90 hot mopped underlayment applications may be installed perpendicular to the roof slope unless stated otherwise by the underlayment material manufacturers published literature.

3.6 This acceptance is for wood deck applications. Minimum deck requirements shall be in compliance with applicable building code.

4. INSTALLATION

4.1 Monier Lifetile Espana Concrete Roof Tile and its components shall be installed in strict compliance with Roofing Application Standard RAS 118, RAS 119, and RAS 120.

4.2 Data For Attachment Calculations

Table 1: Average Weight (W) and Dimensions (l x w)

Tile Profile	Weight-W (lbf)	Length-l (ft)	Width-w (ft)
Monier Lifetile Espana Tile	10.4	1.42	1.04

Table 2: Aerodynamic Multipliers - λ (ft^3)

Tile Profile	λ (ft^3) Batten Application	λ (ft^3) Direct Deck Application
Monier Lifetile Espana Tile	0.274	0.297

Table 3: Restoring Moments due to Gravity - M_g (ft-lbf)

Tile Profile	2":12"		3":12"		4":12"		5":12"		6":12"		7":12" or greater	
Monier Lifetile	Battens	Direct Deck	Battens	Direct Deck	Battens	Direct Deck	Battens	Direct Deck	Battens	Direct Deck	Battens	Direct Deck
Capri Tile	5.93	6.50	5.87	6.44	5.79	6.35	5.67	6.22	5.33	6.07	5.38	5.90

Table 4: Attachment Resistance Expressed as a Moment - M_r (ft-lbf) for Nail-On Systems

Tile Profile	Fastener Type	Direct Deck (min 15/32" plywood)	Direct Deck (min. 19/32" plywood)	Battens
Monier Lifetile Espana Tile	2-10d Ring Shank Nails	28.6	41.2	19.4
	1-10d Smooth or Screw Shank Nail	5.1	6.8	2.8
	2-10d Smooth or Screw Shank Nails	6.9	9.2	7.3
	1 .#8 Screw	20.7	20.7	18.1
	2 .#8 Screws	43.2	43.2	29.8
	1-10d Smooth or Screw Shank Nail (Field Clip)	23.1	23.1	19.0
	1-10d Smooth or Screw Shank Nail (Eave Clip)	29.3	29.3	24.0
	2-10d Smooth or Screw Shank Nails (Field Clip)	27.6	27.6	38.6
	2-10d Smooth or Screw Shank Nails (Eave Clip)	38.1	38.1	41.8

Table 6: Attachment Resistance Expressed as a Moment M_f (ft-lbf) for Two Patty Adhesive Set Systems		
Tile Profile	**Tile Application**	**Minimum Attachment Resistance**
Monier Lifetile Espana Tile	Adhesive	29.3[2]
1 See manufactures component approval for installation requirements.		
2 Flexible Products Company TileBond Average weight per patty 10.7 grams. Polyfoam Product, Inc. Average weight per patty 8 grams.		

Table 7: Attachment Resistance Expressed as a Moment - M_f (ft-lbf) for Single Patty Adhesive Set Systems		
Tile Profile	**Tile Application**	**Minimum Attachment Resistance**
Monier Lifetile Espana Tile	Polyfoam PolyPro™	66.5[3]
	Polyfoam PolyPro™	38.7[4]
3 Large paddy placement of 63grams of PolyPro™.		
4 Medium paddy placement of 24grams of PolyPro™.		

Table 8: Attachment Resistance Expressed as a Moment - M_f (ft-lbf) for Mortar Set Systems		
Tile Profile	**Tile Application**	**Attachment Resistance**
Monier Lifetile Espana Tile	Mortar Set[5]	24.5
5 Tile-Tite Roof Tile Mortar.		

5. LABELING

All tiles shall bear the imprint or identifiable marking of the manufacturer's name or logo, or following statement: "Miami-Dade County Product Control Approved".



MONIERLIFETILE LLC, ESPANA CONCRETE TILE IDENTIFICATION MARK
(LAKE WALES, FL PLANT)
LOCATED UNDERNEATH TILE

6. BUILDING PERMIT REQUIREMENTS

6.1 Application for building permit shall be accompanied by copies of the following:

6.1.1 This Notice of Acceptance.

6.1.2 Any other documents required by the Building Official or applicable building code in order to properly evaluate the installation of this system.

PROFILE DRAWINGS

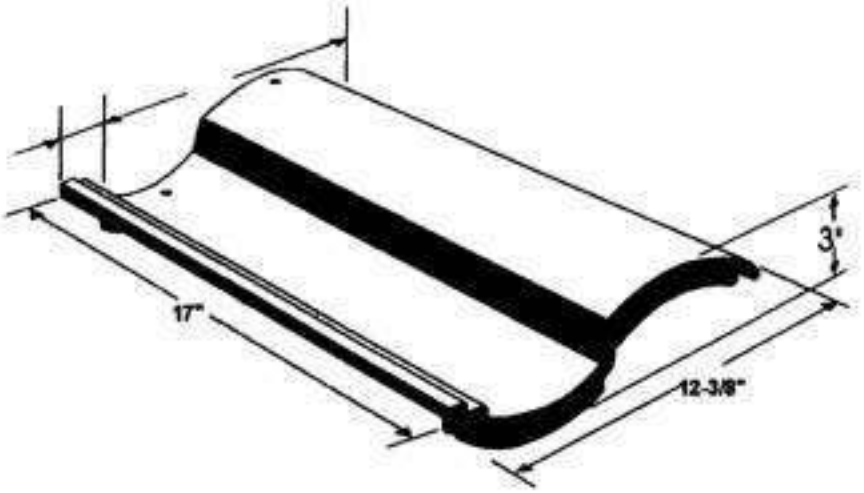

MONIER LIFETILE ESPANA CONCRETE ROOF TILE

END OF THIS ACCEPTANCE

MIAMI-DADE

BUILDING CODE COMPLIANCE OFFICE (BCCO)
PRODUCT CONTROL DIVISION

MIAMI-DADE COUNTY, FLORIDA
METRO-DADE FLAGLER BUILDING
140 WEST FLAGLER STREET, SUITE 1603
MIAMI, FLORIDA 33130-1563
(305) 375-2901 FAX (305) 375-2908

NOTICE OF ACCEPTANCE (NOA)

Polyfoam Products, Inc.
11715 Boudreaux Road
Tomball, TX 77375

SCOPE:
This NOA is being issued under the applicable rules and regulations governing the use of construction materials. The documentation submitted has been reviewed by the BCCO and accepted by the Building Code and Product Review Committee to be used in Miami Dade County and other areas where allowed by the Authority Having Jurisdiction (AHJ).

This NOA shall not be valid after the expiration date stated below. The BCCO (In Miami Dade County) and/or the AHJ (in areas other than Miami Dade County) reserve the right to have this product or material tested for quality assurance purposes. If this product or material fails to perform in the accepted manner, the manufacturer will incur the expense of such testing and the AHJ may immediately revoke, modify, or suspend the use of such product or material within their jurisdiction. BCCO reserves the right to revoke this acceptance, if it is determined by BCCO that this product or material fails to meet the requirements of the applicable building code.

This product is approved as described herein, and has been designed to comply with the High Velocity Hurricane Zone of the Florida Building Code.

DESCRIPTION: Polypro® AH160

RENEWAL of this NOA shall be considered after a renewal application has been filed and there has been no change in the applicable building code negatively affecting the performance of this product.

TERMINATION of this NOA will occur after the expiration date or if there has been a revision or change in the materials, use, and/or manufacture of the product or process. Misuse of this NOA as an endorsement of any product, for sales, advertising or any other purposes shall automatically terminate this NOA. Failure to comply with any section of this NOA shall be cause for termination and removal of NOA.

ADVERTISEMENT: The NOA number preceded by the words Miami-Dade County, Florida, and followed by the expiration date may be displayed in advertising literature. If any portion of the NOA is displayed, then it shall be done in its entirety.

INSPECTION: A copy of this entire NOA shall be provided to the user by the manufacturer or its distributors and shall be available for inspection at the job site at the request of the Building Official.

This NOA renews NOA No.01-0521.02 and consists of pages 1 through 7
The submitted documentation was reviewed by Jorge L. Acebo.

APPROVED
JUL 14 2009
CITY OF HOLLYWOOD, FLA.
STRUCTURAL

NOA No.: 06-0201.02
Expiration Date: 05/10/11
Approval Date: 04/13/06

ROOFING ASSEMBLY APPROVAL:

Category:	Roofing
Sub Category:	Roof tile adhesive
Materials:	Polyurethane

SCOPE:

This approves **Polypro® AH160** as manufactured by **Polyfoam Products, Inc.** as described in Section 2 of this Notice of Acceptance. For the locations where the design pressure requirements, as determined by applicable building code, does not exceed the design pressure values obtained by calculations in compliance with Roofing Application Standard RAS 127, for use with approved flat, low, and high profile roof tiles system using Polypro® AH 160. Where the attachment calculations are done as a moment based system for single patty placement, and as an uplift based system for double patty systems

PRODUCTS MANUFACTURED BY APPLICANT:

Product	Dimensions	Test Specifications	Product Description
Polypro® AH160	N/A	TAS 101	Two component polyurethane foam adhesive
Foampro® RTF1000	N/A		Dispensing Equipment
ProPack® 30 & 100	N/A		Dispensing Equipment

PRODUCTS MANUFACTURED BY OTHERS:

Any Miami-Dade County Product Control Accepted Roof Tile Assembly having a current NOA which list moment resistance values with the use of Polypro AH160 roof tile adhesive.

PHYSICAL PROPERTIES:

Property	Test	Results
Density	ASTM D 1622	1.6 lbs./ft.^{3}
Compressive Strength	ASTM D 1621	18 PSI Parallel to rise 12 PSI Perpendicular to rise
Tensile Strength	ASTM D 1623	28 PSI Parallel to rise
Water Absorption	ASTM D 2127	0.08 Lbs./Ft^2
Moisture Vapor Transmission	ASTM E 96	3.1 Perm / Inch
Dimensional Stability	ASTM D 2126	+0.07% Volume Change @ -40° F., 2 weeks +6.0% Volume Change @158°F., 100% Humidity, 2 weeks
Closed Cell Content	ASTM D 2856	86%

Note: The physical properties listed above are presented as typical average values as determined by accepted ASTM test methods and are subject to normal manufacturing variation.

EVIDENCE SUBMITTED:

Test Agency	Test Identifier	Test Name/Report	Date
Center for Applied Engineering	#94-060	TAS 101	04/08/94
	257818-1PA	TAS 101	12/16/96
	25-7438-3	SSTD 11-93	10/25/95
	25-7438-4		
	25-7438-7	SSTD 11-93	11/02/95
	25-7492	SSTD 11-93	12/12/95
Miles Laboratories Polymers Division	NB-589-631	ASTM D 1623	02/01/94
Ramtech Laboratories, Inc.	9637-92	ASTM E 108	04/30/93
Southwest Research Institute	01-6743-011	ASTM E 108	11/16/94
	01-6739-062b[1]	ASTM E 84	01/16/95
Trinity Engineering	7050.02.96-1	TAS 114	03/14/96
Celotex Corp. Testing Services	528454-2-1	TAS 101	10/23/98
	528454-9-1		
	528454-10-1		
	520109-1	TAS 101	12/28/98
	520109-2		
	520109-3		
	520109-6		
	520109-7		
	520191-1	TAS 101	03/02/99
	520109-2-1		

LIMITATIONS:

1. Fire classification is not part of this acceptance. Refer to the Prepared Roof Tile Assembly for fire rating.
2. Polypro® AH160 shall solely be used with flat, low, & high tile profiles.
3. Minimum underlayment shall be in compliance with the Roofing Application Standard RAS 120.
4. Roof Tile manufactures acquiring acceptance for the use of Polypro® AH160 roof tile adhesive with their tile assemblies shall test in accordance with TAS 101.
5. Roof Tile manufactures acquiring acceptance for the use of HANDI-STICK roof tile adhesive with their tile assemblies shall test in accordance with TAS 101 with section 10.4 as modified herein.

$$F' = \left(\frac{F}{2}\right) \frac{W}{MS}$$

INSTALLATION:

1. Polypro® AH160 may be used with any roof tile assembly having a current NOA that lists uplift resistance values with the use of Polypro® AH160.
2. Polypro® AH160 shall be applied in compliance with the Component Application section and the corresponding Placement Details noted herein. The roof tile assembly's adhesive attachment with the use of Polypro® AH160 shall provide sufficient attachment resistance, expressed as an uplift based system, to meet or exceed the uplift resistance determined in compliance with Miami-Dade County Roofing Application Standards RAS 127. The adhesive attachment data is noted in the roof tile assembly NOA
3. Polypro® AH160 roof tile adhesive and its components shall be installed in accordance with Roofing Application Standard RAS 120, and Polyfoam Products, Inc. Polypro® AH160 Operating Instruction and Maintenance Booklet.
4. Installation must be by a Factory Trained 'Qualified Applicator' approved and licensed by Polyfoam Products, Inc. Polyfoam Products Inc. shall supply a list of approved applicators to the authority having jurisdiction.
5. Calibration of the Foampro® dispensing equipment is required before application of any adhesive. The mix ratio between the "A" component and the "B" component shall be maintained between 1.0-1.15 (A): 1.0 (B). The dispense timer shall be set to deliver 0.0175 to 0.15 pounds per tile as determined at calibration. No other settings shall be approved.
6. Polypro® AH160 shall be applied with Foampro RTF1000 or ProPack® 30 & 100 dispensing equipment only.
7. Polypro® AH160 shall not be exposed permanently to sunlight.
8. Tiles must be adhered in freshly applied adhesive. Tile must be set within 2 to 3 minutes after Polypro® AH160 has been dispensed.
9. Polypro® AH160 placement and minimum patty weight shall be in accordance with the 'Placement Details' herein. Each generic tile profile requires the specific placement noted herein.

Table 1: Adhesive Placement For Each Generic Tile Profile

Tile Profile	Placement Detail	Single Paddy Weight Min. (grams)	Two Paddy Weight per paddy Min. (grams)
Flat, Low, High Profiles	#1	35	N/A
High Profile (2 Piece Barrel)	#1	17/side on cap and 34/pan	N/A
Flat, Low, High Profiles	#2	24	N/A
Flat, Low, High Profiles	#3		8

LABELING:

All Polypro® AH160 containers shall comply with the Standard Conditions listed herein.

BUILDING PERMIT REQUIREMENTS:

As required by the Building Official or applicable building code in order to properly evaluate the installation of this system.

ADHESIVE PLACEMENT DETAIL 1
SINGLE PATTY

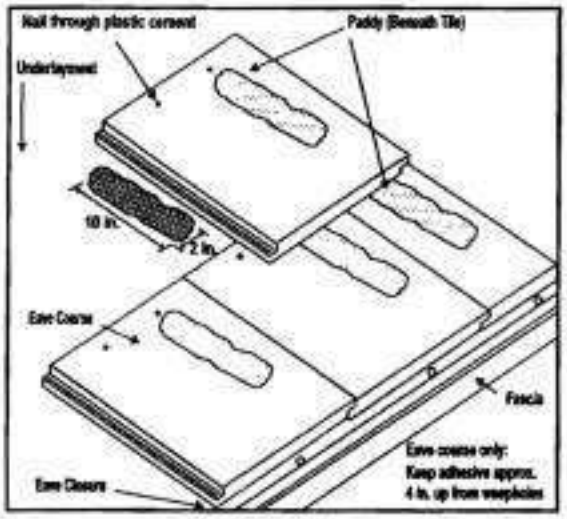

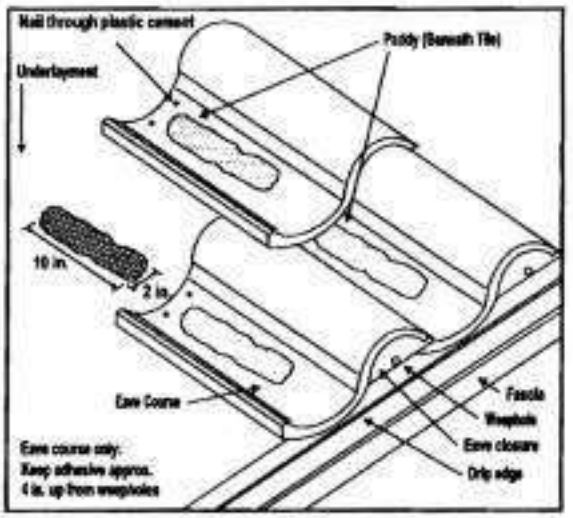

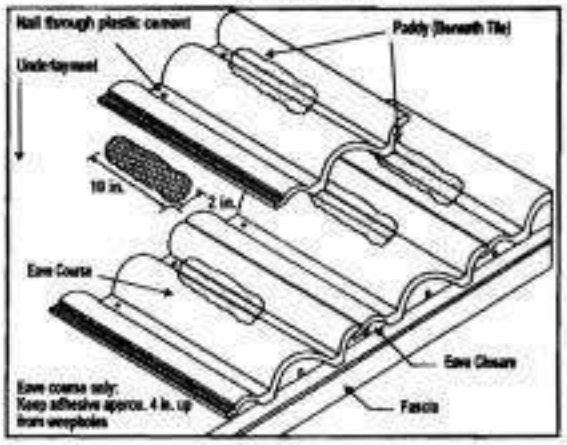

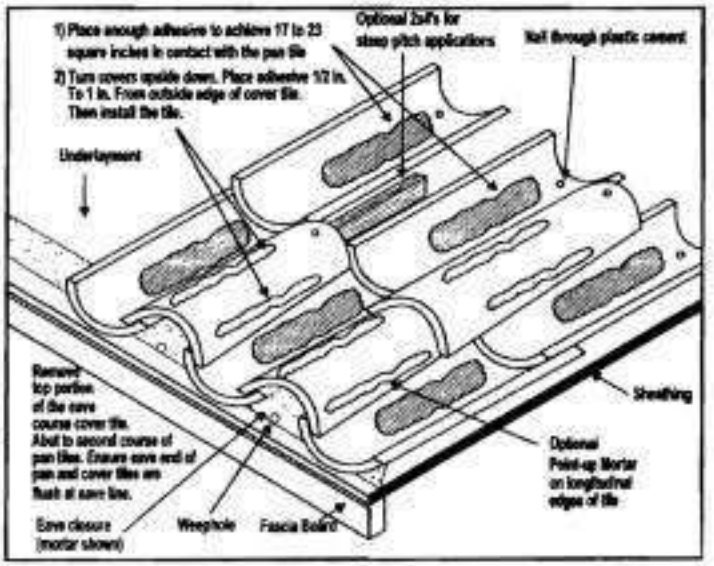

ADHESIVE PLACEMENT DETAIL 2
SINGLE PATTY

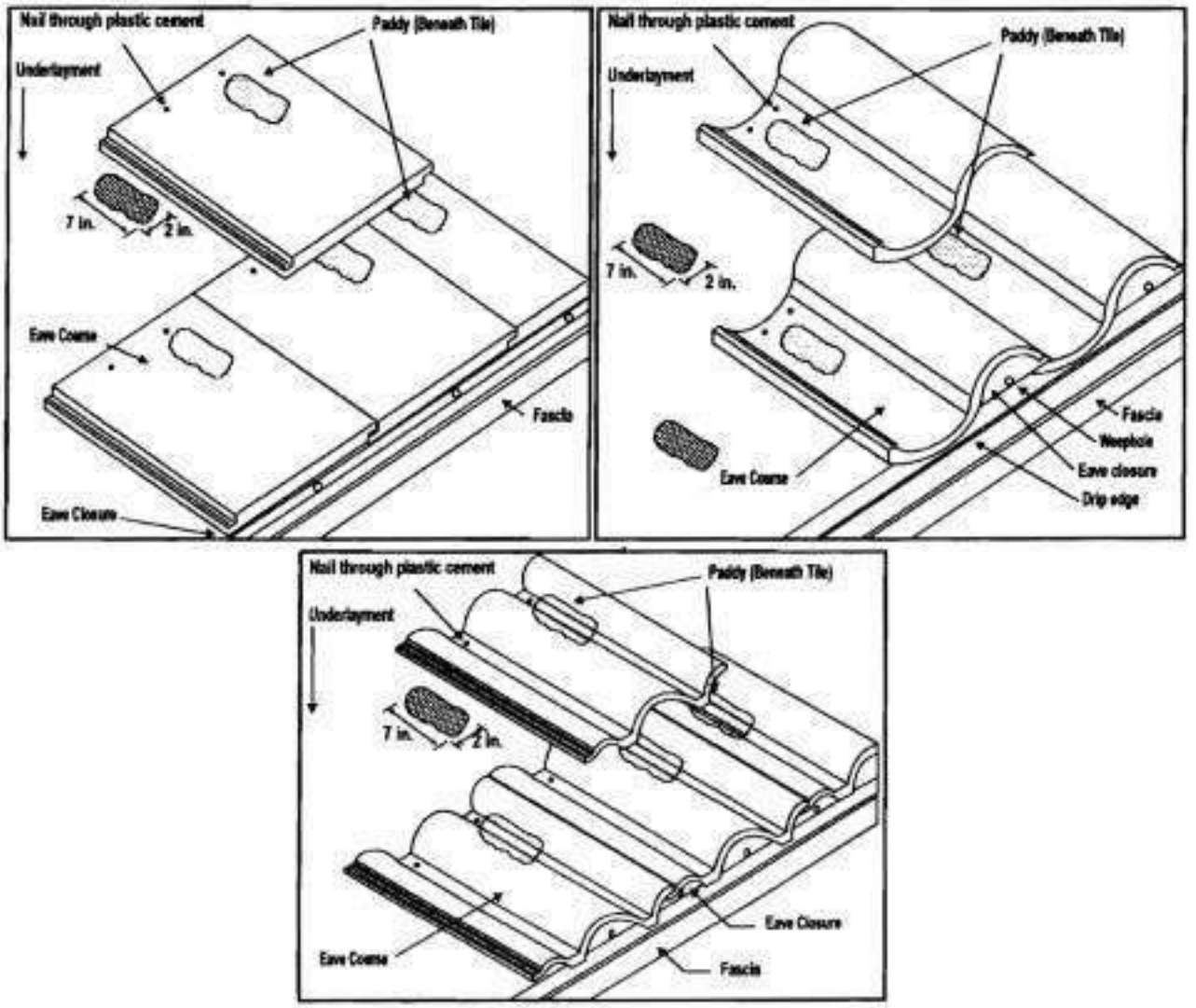

ADHESIVE PLACEMENT DETAIL 3
DOUBLE PATTY

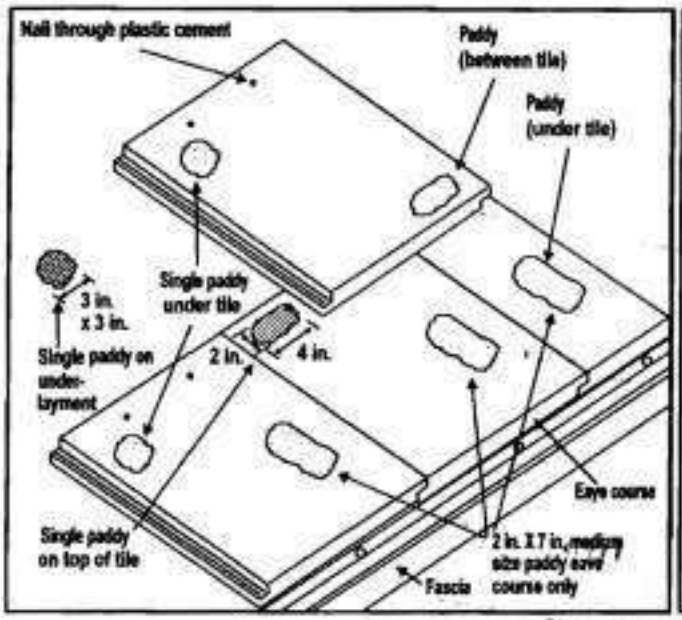

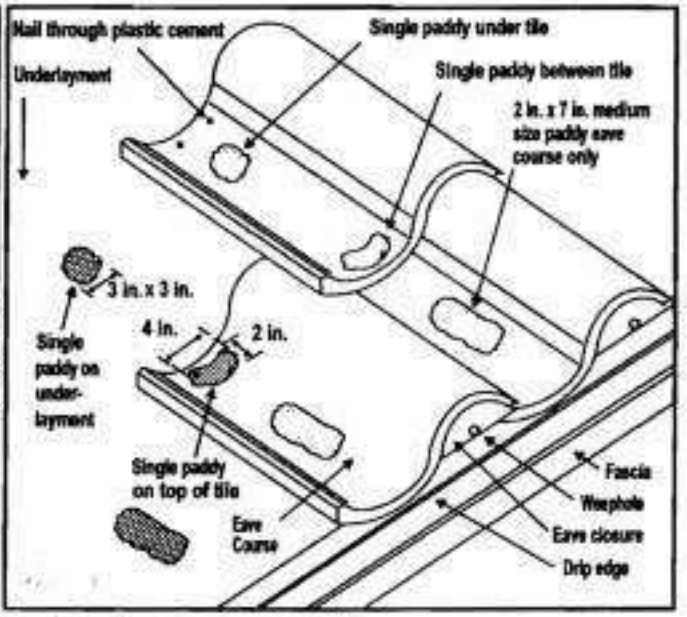

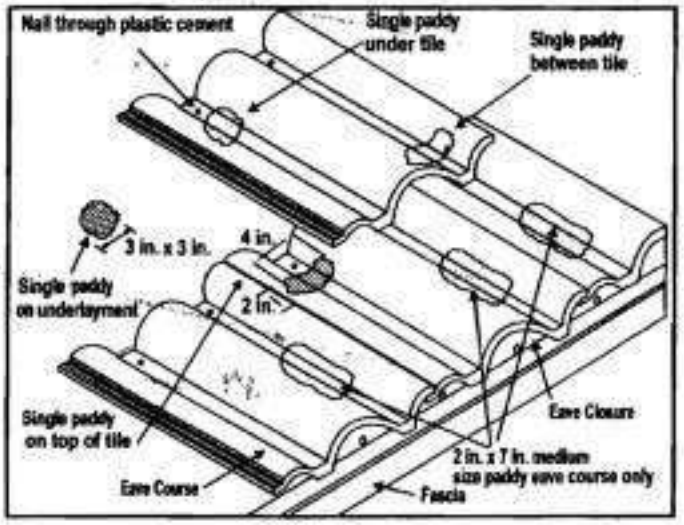

END OF THIS ACCEPTANCE

MIAMI-DADE

BUILDING CODE COMPLIANCE OFFICE (BCCO)
PRODUCT CONTROL DIVISION

MIAMI-DADE COUNTY, FLORIDA
METRO-DADE FLAGLER BUILDING
140 WEST FLAGLER STREET, SUITE 1603
MIAMI, FLORIDA 33130-1563
(305) 375-2901 FAX (305) 375-2908

NOTICE OF ACCEPTANCE (NOA)

Tarco
One Information Way, Suite 225
Little Rock, AR 72202

SCOPE

This NOA is being issued under the applicable rules and regulations governing the use of construction materials. The documentation submitted has been reviewed by Miami-Dade County Product Control Division and accepted by the Board of Rules and Appeals (BORA) to be used in Miami Dade County and other areas where allowed by the Authority Having Jurisdiction (AHJ).

This NOA shall not be valid after the expiration date stated below. The Miami-Dade County Product Control Division (In Miami Dade County) and/or the AHJ (in areas other than Miami Dade County) reserve the right to have this product or material tested for quality assurance purposes. If this product or material fails to perform in the accepted manner, the manufacturer will incur the expense of such testing and the AHJ may immediately revoke, modify, or suspend the use of such product or material within their jurisdiction. BORA reserves the right to revoke this acceptance, if it is determined by Miami-Dade County Product Control Division that this product or material fails to meet the requirements of the applicable building code.

This product is approved as described herein, and has been designed to comply with the Florida Building Code, including the High Velocity Hurricane Zone of the Florida Building Code.

DESCRIPTION: Fast90

LABELING: Each unit shall bear a permanent label with the manufacturer's name or logo, city, state and following statement: "Miami-Dade County Product Control Approved", unless otherwise noted herein.

RENEWAL of this NOA shall be considered after a renewal application has been filed and there has been no change in the applicable building code negatively affecting the performance of this product.

TERMINATION of this NOA will occur after the expiration date or if there has been a revision or change in the materials, use, and/or manufacture of the product or process. Misuse of this NOA as an endorsement of any product, for sales, advertising or any other purposes shall automatically terminate this NOA. Failure to comply with any section of this NOA shall be cause for termination and removal of NOA.

ADVERTISEMENT: The NOA number preceded by the words Miami-Dade County, Florida, and followed by the expiration date may be displayed in advertising literature. If any portion of the NOA is displayed, then it shall be done in its entirety.

INSPECTION: A copy of this entire NOA shall be provided to the user by the manufacturer or its distributors and shall be available for inspection at the job site at the request of the Building Official.

This new NOA consists of pages 1 through 5.
The submitted documentation was reviewed by Jorge Acebo.

APPROVED
JUL 14 2009
CITY OF HOLLYWOOD, FLA.
STRUCTURAL

NOA No: 06-1101.09
Expiration Date: 01/25/12
Approval Date: 01/25/07

ROOFING COMPONENT APPROVAL

Category:	Roofing
Sub-Category:	Underlayment
Material:	Asphalt/ SBS

SCOPE:

This acceptance is for **Fast90** underlayment as manufactured by Tarco, for use with approved prepared roof assemblies as described in this Notice of Acceptance; designed to comply with the Florida Building Code, including the High Velocity Hurricane Zone of the Florida Building Code.

PRODUCTS DESCRIPTION:

Product	Dimensions	Test Specification	Product Description
Fast90	3' x 36' rolls	TAS103 ASTM D249 ASTM D6380	Granular surfaced, asphalt-impregnated organic felt reinforced, bituminous sheet material with a self-adhesive bottom layer, for use as an underlayment in sloped roof assemblies. Designed as a roof tile underlayment.

EVIDENCE SUBMITTED:

Test Agency	Test Identifier	Test Name/Report	Date
Atlantic & Carribean Roof Consulting, LLC	ACRC06-013	TAS 103	06/14/06
Trinity | ERD	T3580.10.06-2	TAS 103	10/26/06
	T3580.10.06	TAS 103 ASTM D6380	10/12/06
PRI Asphalt Technologies	TOT-029-02-01	TAS 110 ASTM D249 ASTM D6380	07/05/05
	TOT-030-02-01	TAS 110 ASTM D249 ASTM D6380	07/05/05
	TOT-041-02-01	TAS 110 ASTM D226 Type II	05/24/06

GENERAL LIMITATIONS:

1. Fire classification is not part of this acceptance; refer to a current Approved Roofing Materials Directory for fire ratings of this product.
2. This acceptance is for prepared roofing applications. Minimum deck requirements shall be in compliance with applicable building code.
3. Fast90 shall be applied only when material interface (air, deck, membrane) temperatures are 40° F and rising.
4. Fast90 shall not be installed when any form of moisture such as water, dew, rain, etc. is present on the substrate.

5. Fast90 shall be applied to a smooth, clean and dry surface, with the deck free from irregularities.
6. Fast90 shall not be applied over an existing roof membrane.
7. Ensure roof has positive drainage prior to installation of Fast90.
8. After installation of Fast90, wait a minimum of 24 hours before roof loading of tiles.
9. Care should be taken during the loading procedure to keep foot traffic to a minimum and to avoid dropping of tile directly on the underlayment.
10. All tiles shall be staged (four tiles perpendicular to slope, six tiles on top parallel to slope) as per manufacturer's requirements, not to exceed 10-high, to the standard maximum roof pitch of 5:12 for flat tiles and 6:12 for lugged tiles (See Tile Staging Method below).

    At roof slopes greater than the above limitations, Fast90 shall be installed behind a nominal 1" x 2" horizontal batten.

Tile Staging Method



Front View - Staged Tiles

Side View - Staged Tiles

11. Fast90 shall not be left exposed for longer than 180 days after application.
12. The manufacturer reserves the right to modify product exposure period at any time; not to exceed the preceding maximum time limitations.
13. Refer to prepared roofing system Product Control Notice of Acceptance for listed approval of this product with specific prepared roofing products. Fast90 may be used with any approved roof covering Notice of Acceptance listing Fast90 as a component part of an assembly in the Notice of Acceptance.

    If Fast90 is not listed, a request may be made to the Authority Having Jurisdiction (AHJ) or the Miami-Dade County Product Control Department for approval provided that appropriate documentation is provided to detail compatibility of the products, wind uplift resistance, and fire testing results.
14. All products lised herein shall have a quality assurance audit in accordance with the Florida Building Code and Rule 9B-72 of the Florida Administrative Code.

APPROVED ASSEMBLIES:

System E(1):	Anchor sheet mechanically fastened to deck, membrane adhered.
Deck Type 1:	Wood, Non-Insulated.
Deck Description:	Minimum 19/32" plywood or wood plank.
Anchor/Base Sheet:	One or more plies of ASTM D226 Type II, or ASTM D2626, or EasyLay underlayment, with a minimum 4" wide side lap and a minimum 8" wide end lap, mechanically fastened to deck.
Fastening:	Approved nails and tin caps 6" o.c. within lap and two equally spaced staggered rows 12" o.c. in the field (for Anchor/Base sheet only).
Membrane:	One ply of Fast90 with a minimum 4" wide side lap and a minimum 8" wide end lap, adhered to the base sheet.
Surfacing:	Approved Roof Assemblies.

INSTALLATION REQUIREMENTS:

1. Fast90 shall be installed in strict compliance with applicable Building Codes.
2. Fast90 shall be acceptable for mechanically fastened roof tile and adhered roof tile applications.
3. Re-fasten any loose decking panels, and check for protruding nail heads. Sweep the substrate thoroughly to remove any dust and debris prior to application.
4. For re-roofing applications, all old roofing and other loose materials must be removed. Do not install directly on old roof coverings.
5. Cut the roll into 12' to 16' sections for workability and allow to relax prior to application.

   Place a full width piece of the membrane on the base sheet, parallel to the eave (low) edge of the roof, with the side lap on the up slope side.

   Fold the eave edge up, exposing the release liner.

   Then remove the exposed release liner, taking care not to displace the membrane.

   Working from the center out, 'roll' the membrane onto the deck, taking care to avoid wrinkles or creases.

   Repeat the process for the other half.

   Align the next roll over the preceding sheet so as to form a 4" seam, and then fold back the sheet, exposing the side lap of the first sheet.

   Remove any selvage release film, if present, covering the side lap, prior to application.

   Install capped or tin tagged nails 6" o.c. in the center of the seam area according to applicable Building Code.

   Then install the just placed membrane, per instructions above.

   Walk in the field and seam areas to press the sheet in place, as it is applied.

   Apply subsequent sheets in the same manner, with 4" side laps and 8" end laps over the preceding sheets.

Apply full roll width, a 1/16" thick uniform layer of asphalt plastic cement to the surface of the first course in the 8" end lap area before adhering the next course.

Stagger the end laps a minimum of 36" (3') from the preceding course.

Roll or broom the entire membrane surface so as to have 100% contact with the substrate, giving special attention to the overlap areas.

6. Membrane shall be applied to protrusions, slope changes, valleys, curbs, and other roof top penetrations before any other sections of the roof.
7. When applying the membrane in the valley, start at the low point and work to the high point, rolling the membrane from the center outward in each direction.
8. For ridge applications, center the membrane and roll from the center outward in both directions.
9. Place the membrane over any metal drip edge in accordance with RAS 111.
10. Prime all metal collars, flashing, valleys, liner and drip edge with ASTM D-41 primer.
11. Vertical strapping of the roof with Fast90 is acceptable.
12. Flash vent pipes, stacks, chimneys and penetrations in compliance with Roof Assembly current Product Control Notice of Acceptance and applicable Building Code.
13. All protrusions or drains shall be initially taped with a 6" piece of underlayment. The flashing tape shall be pressed in place and formed around the protrusion to ensure a tight fit. A second layer of Fast90 shall be applied over the underlayment.

LABELING:

All membranes shall bear the imprint or identifiable marking of the manufacturer's name or logo, or a yellow line running the length of the membrane, or the Miami-Dade County logo, or the following statement: "Miami-Dade County Product Control Approved".

BUILDING PERMIT REQUIREMENTS:

Application for building permit shall be accompanied by copies of the following:

1. This Notice of Acceptance.
2. Any other documents required by the Building Official or applicable building code in order to properly evaluate the installation of these materials.

END OF THIS ACCEPTANCE

ONLINE CERTIFICATIONS DIRECTORY

TGJR.R13228
Roofing Systems Components - Material Characteristics

Page Bottom

Roofing Systems Components - Material Characteristics

See General Information for Roofing Systems Components - Material Characteristics

TARCO OF TEXAS INC R13228
2403 TAYLOR VALLEY RD
BELTON, TX 76513 USA

Classified in Accordance with ASTM D6380-03 Class M Type II.

FAST 90

Organic Mineral Surfaced Tile Underlayment

Last Updated on 2006-05-17

Questions? Notice of Disclaimer Page Top

Copyright © 2009 Underwriters Laboratories Inc.®

The appearance of a company's name or product in this database does not in itself assure that products so identified have been manufactured under UL's Follow-Up Service. Only those products bearing the UL Mark should be considered to be Listed and covered under UL's Follow-Up Service. Always look for the Mark on the product.

UL permits the reproduction of the material contained in the Online Certification Directory subject to the following conditions: 1. The Guide Information, Designs and/or Listings (files) must be presented in their entirety and in a non-misleading manner, without any manipulation of the data (or drawings). 2. The statement "Reprinted from the Online Certifications Directory with permission from Underwriters Laboratories Inc." must appear adjacent to the extracted material. In addition, the reprinted material must include a copyright notice in the following format: "Copyright © 2009 Underwriters Laboratories Inc.®"

An independent organization working for a safer world with integrity, precision and knowledge.





Community Affairs

Community Affairs

Product Approval

USER: Public User

FL #	FL4904-R3
Application Type	Revision
Code Version	2007
Application Status	Approved
Comments	
Archived	

Product Manufacturer	Masonite International
Address/Phone/Email	One North Dale Mabry Suite 950 Tampa, FL 33609 (615) 441-4258 sschreiber@masonite.com
Authorized Signature	Steve Schreiber sschreiber@masonite.com
Technical Representative Address/Phone/Email	
Quality Assurance Representative Address/Phone/Email	
Category	Exterior Doors
Subcategory	Swinging Exterior Door Ass
Compliance Method	Certification Mark or Listing
Certification Agency	National Accreditation & Ma
Validated By	National Accreditation & Ma

Approved 6.4.09
for 1401 Jackson St.
Hollywood, FL.

JUN 11 2009

Referenced Standard and Year (of Standard)	**Standard** TAS 201 TAS 202 TAS 203
Equivalence of Product Standards Certified By	
Product Approval Method	Method 1 Option A
Date Submitted	12/23/2008
Date Validated	12/29/2008
Date Pending FBC Approval	01/05/2009
Date Approved	02/03/2009

Summary of Products

FL #	Model, Number or Name	Description
4904.1	Wood-edge Steel Side-Hinged Door Units	6'-8" Opaque I/S
Limits of Use **Approved for use in HVHZ:** Yes **Approved for use outside HVHZ:** Yes **Impact Resistant:** Yes **Design Pressure:** +76.0/-76.0 **Other:** Evaluated for use in locations adhering to the Florida Building Code including the High Velocity Hurricane Zone, and where pressure requirements as determined by ASCE 7, Minimum Design Loads for Buildings and Other Structures, does not exceed the design pressures listed. 3'-0" x 6'-8" max nominal size. When large missile impact resistance is required, hurricane protective system is NOT required. See DWG-MA-FL0128-05 for details.		**Certification Ag** FL4904_R3_C_C/ **Quality Assuran** 12/31/2010 **Installation Inst** FL4904_R3_II_FL Verified By: Natic Institute, Created by Indep **Evaluation Repo** Created by Indep
4904.2	Wood-edge Steel Side-Hinged Door Units	8'-0" Opaque I/S
Limits of Use **Approved for use in HVHZ:** Yes		**Certification Ag** FL4904_R3_C_C/

JUN 11 2009

Approved for use outside HVHZ: Yes **Impact Resistant:** Yes **Design Pressure:** +70.0/-70.0 **Other:** Evaluated for use in locations adhering to the Florida Building Code including the High Velocity Hurricane Zone, and where pressure requirements as determined by ASCE 7, Minimum Design Loads for Buildings and Other Structures, does not exceed the design pressures listed. 3'-0" x 8'-0" max nominal size. When large missile impact resistance is required, hurricane protective system is NOT required. See DWG-MA-FL0129-05 for details.		**Quality Assuran** 12/31/2010 **Installation Inst** FL4904_R3_II_FL Verified By: Natic Institute, Created by Indep **Evaluation Repo** Created by Indep
4904.3	Wood-edge Steel Side-Hinged Door Units	6'-8" Opaque I/S
Limits of Use **Approved for use in HVHZ:** Yes **Approved for use outside HVHZ:** Yes **Impact Resistant:** Yes **Design Pressure:** +55.0/-55.0 **Other:** Evaluated for use in locations adhering to the Florida Building Code including the High Velocity Hurricane Zone, and where pressure requirements as determined by ASCE 7, Minimum Design Loads for Buildings and Other Structures, does not exceed the design pressures listed. 12'-0" x 6'-8" max nominal size. When large missile impact resistance is required, hurricane protective system is NOT required on opaque panels, but is required on glazed panels. See DWG-MA-FL0128-05 for details.		**Certification Age** FL4904_R3_C_CA **Quality Assuran** 12/31/2010 **Installation Inst** FL4904_R3_II_FL Verified By: Natic Institute, Created by Indep **Evaluation Repo** Created by Indep
4904.4	Wood-edge Steel Side-Hinged Door Units	8'-0" Opaque I/S
Limits of Use **Approved for use in HVHZ:** Yes **Approved for use outside HVHZ:** Yes **Impact Resistant:** Yes **Design Pressure:** +45.0/-50.0 **Other:** Evaluated for use in locations adhering to the Florida Building Code including the High Velocity Hurricane Zone, and where pressure requirements as determined by ASCE 7, Minimum Design Loads for Buildings and Other Structures, does not exceed the design pressures listed. 12'-0" x 8'-0" max nominal size. When large missile impact resistance is required, hurricane protective system is NOT required on opaque panels, but is required on glazed panels. See DWG-MA-FL0129-05 for details.		**Certification Age** FL4904_R3_C_CA **Quality Assuran** 12/31/2010 **Installation Inst** FL4904_R3_II_FL Verified By: Natic Institute, Created by Indep **Evaluation Repo** Created by Indep
4904.5	Wood-edge Steel Side-Hinged Door Units	8'-0" Opaque O/S
Limits of Use **Approved for use in HVHZ:** Yes **Approved for use outside HVHZ:** Yes		**Certification Age** FL4904_R3_C_CA **Quality Assuran**

Impact Resistant: Yes **Design Pressure:** +50.0/-45.0 **Other:** Evaluated for use in locations adhering to the Florida Building Code including the High Velocity Hurricane Zone, and where pressure requirements as determined by ASCE 7, Minimum Design Loads for Buildings and Other Structures, does not exceed the design pressures listed. 12'-0" x 8'-0" max nominal size. When large missile impact resistance is required, hurricane protective system is NOT required on opaque panels, but is required on glazed panels. See DWG-MA-FL0129-05 for details.		12/31/2010 **Installation Inst** FL4904_R3_II_FL Verified By: Natic Institute, Created by Indep **Evaluation Repo** Created by Indep
4904.6	Wood-edge Steel Side-Hinged Door Units	6'-8" Glazed I/S a
Limits of Use **Approved for use in HVHZ:** Yes **Approved for use outside HVHZ:** Yes **Impact Resistant:** No **Design Pressure:** +50.5/-50.5 **Other:** Evaluated for use in locations adhering to the Florida Building Code including the High Velocity Hurricane Zone, and where pressure requirements as determined by ASCE 7, Minimum Design Loads for Buildings and Other Structures, does not exceed the design pressures listed. 12'-0" x 6'-8" max nominal size. When large missile impact resistance is required, hurricane protective system is required. See DWG-MA-FL0130-05 for details.		**Certification Age** FL4904_R3_C_CA **Quality Assuran** 12/31/2010 **Installation Inst** FL4904_R3_II_FL Verified By: Natic Institute, Created by Indep **Evaluation Repo** Created by Indep
4904.7	Wood-edge Steel Side-Hinged Door Units	8'-0" Glazed I/S D
Limits of Use **Approved for use in HVHZ:** Yes **Approved for use outside HVHZ:** Yes **Impact Resistant:** No **Design Pressure:** +40.0/-45.0 **Other:** Evaluated for use in locations adhering to the Florida Building Code including the High Velocity Hurricane Zone, and where pressure requirements as determined by ASCE 7, Minimum Design Loads for Buildings and Other Structures, does not exceed the design pressures listed. 12'-0" x 8'-0" max nominal size. When large missile impact resistance is required, hurricane protective system is required. See DWG-MA-FL0131-05 for details.		**Certification Age** FL4904_R3_C_CA **Quality Assuran** 12/31/2010 **Installation Inst** FL4904_R3_II_FL Verified By: Natic Institute, Created by Indep **Evaluation Repo** Created by Indep
4904.8	Wood-edge Steel Side-Hinged Door Units	8'-0" Glazed O/S I
Limits of Use **Approved for use in HVHZ:** Yes **Approved for use outside HVHZ:** Yes **Impact Resistant:** No **Design Pressure:** +45.0/-40.0		**Certification Age** FL4904_R3_C_CA **Quality Assuran** 12/31/2010 **Installation Inst**

Other: Evaluated for use in locations adhering to the Florida Building Code including the High Velocity Hurricane Zone, and where pressure requirements as determined by ASCE 7, Minimum Design Loads for Buildings and Other Structures, does not exceed the design pressures listed. 12'-0" x 8'-0" max nominal size. When large missile impact resistance is required, hurricane protective system is required. See DWG-MA-FL0131-05 for details.	FL4904_R3_II_FL Verified By: Natic Institute, Created by Indep **Evaluation Repo** Created by Indep

Back Next

DCA Administration

Department of Community Affairs
Florida Building Code Online
Codes and Standards
2555 Shumard Oak Boulevard
Tallahassee, Florida 32399-2100
(850) 487-1824, Fax (850) 414-8436

© 2000-2005 The State of Florida. All rights reserved. Copyright

Product Approval Accepts:

Masonite

SIDE-HINGED WOOD-EDGE STEEL DOOR UNIT
6'-8" DOUBLE DOOR WITH / WITHOUT SIDELITES

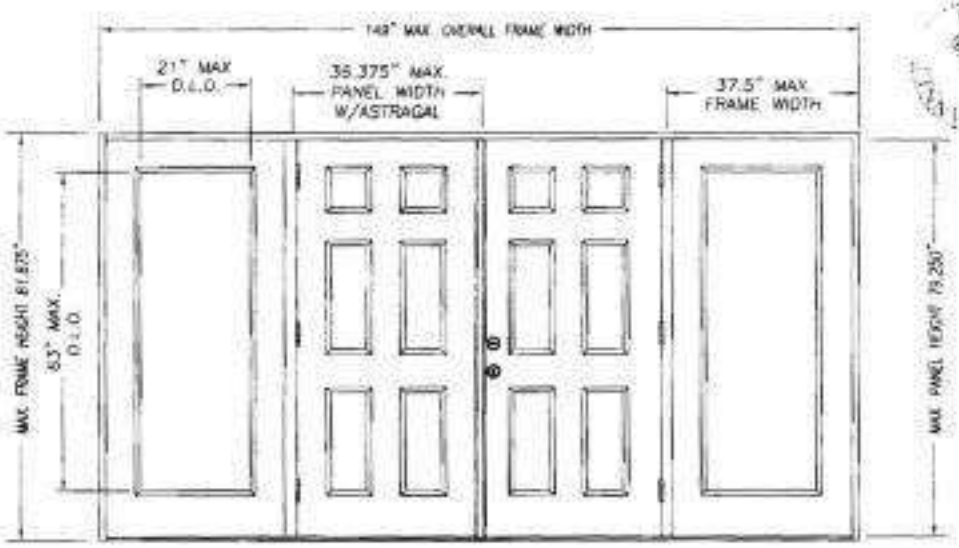

DOUBLE DOOR UNIT W/SIDELITES

GENERAL NOTES

1. EVALUATED FOR USE IN LOCATIONS ADHERING TO THE FLORIDA BUILDING CODE AND WHERE PRESSURE REQUIREMENTS AS DETERMINED BY ASCE 7, MINIMUM DESIGN LOADS FOR BUILDINGS AND OTHER STRUCTURES, DOES NOT EXCEED THE DESIGN PRESSURES LISTED.
2. HURRICANE PROTECTIVE SYSTEM (SHUTTERS) IS NOT REQUIRED ON OPAQUE PANELS, BUT IS REQUIRED ON GLAZED SIDELITES.
3. POLYURETHANE CORE FLAME SPREAD INDEX OF 50 AND SMOKE DEVELOPED INDEX OF 60 PER ASTM E84.
4. PLASTICS TESTING OF LITE FRAME MATERIAL:

TEST DESCRIPTION	DESIGNATION	RESULT
SELF IGNITION TEMP	ASTM D1929	650 °F > 650 °F
RATE OF BURNING	ASTM D635	1.10 IN/MIN
SMOKE DENSITY	ASTM D2843	69.6%
TENSILE STRENGTH*	ASTM D638	-7.48% DIFF

* COMPARATIVE TENSILE STRENGTH AFTER WEATHERING 4500 HOURS XENON ARC METHOD 1

Addendum to MAMI

Certification No.: N100410-R8
Reviewed By: [illegible]
Date Reviewed: 12/15/08

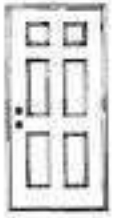

SINGLE DOOR UNIT



DOUBLE DOOR UNIT

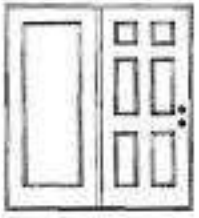

SINGLE DOOR UNIT WITH SIDELITE



SINGLE DOOR UNIT WITH SIDELITE

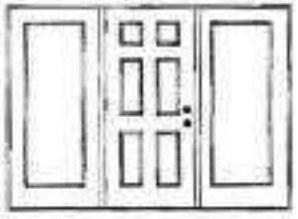

SINGLE DOOR UNIT W/SIDELITES

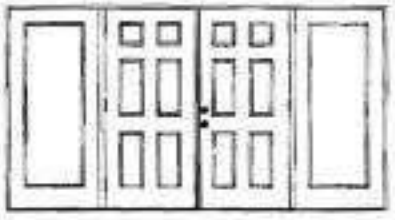

DOUBLE DOOR UNIT W/SIDELITES

TABLE OF CONTENTS

SHEET #	DESCRIPTION
1	TYPICAL ELEVATIONS & GENERAL NOTES
2	ANCHORING LOCATIONS & DETAILS
3	ANCHORING LOCATIONS & DETAILS

CONFIG	MAX WIDTH	DESIGN PRESSURE RATING INSWING	DESIGN PRESSURE RATING OUTSWING	WHERE WATER INFILTRATION PERFORMANCE IS REQUIRED TO BE 15% OF DESIGN PRESSURE INSWING	WHERE WATER INFILTRATION PERFORMANCE IS REQUIRED TO BE 15% OF DESIGN PRESSURE OUTSWING
X	37.5"	+76.0 / -76.0	+76.0 / -76.0	+19.0 / -19.0	+55.0 / -55.0
XX	74"	+55.0 / -55.0	+55.0 / -55.0	+19.0 / -19.0	+55.0 / -55.0
OX or XO	75"	+55.0 / -55.0	+55.0 / -55.0	+19.0 / -19.0	+55.0 / -55.0
OXO	112.5"	+55.0 / -55.0	+55.0 / -55.0	+19.0 / -19.0	+55.0 / -55.0
OXXO	149"	+55.0 / -55.0	+55.0 / -55.0	+19.0 / -19.0	+55.0 / -55.0

MASONITE INTERNATIONAL CORP.
7300 REAMES RD.
CHARLOTTE, NC 28216

PRODUCT: "EXTERNAL DOOR PRODUCT" DOUBLE 6'8" OPAQUE WOOD-EDGE STEEL DOOR

PART OR ASSEMBLY: TYPICAL ELEVATIONS & GENERAL NOTES

REVISIONS

NO	DATE		BY
C	12/15/08	ADDED SPACER	SWS
B	1/2/08	HINGE SCREW LENGTH	SWS

DATE: 7/11/05
SCALE: N.T.S.
DWG. BY: SWS
CHK. BY:
DRAWING NO.: DWG-MA-FL0128-05
SHEET 1 OF 1

JOB. 1404 JACKSON ST
Hollywood, FL.

Approved 6.4.09
[signature]

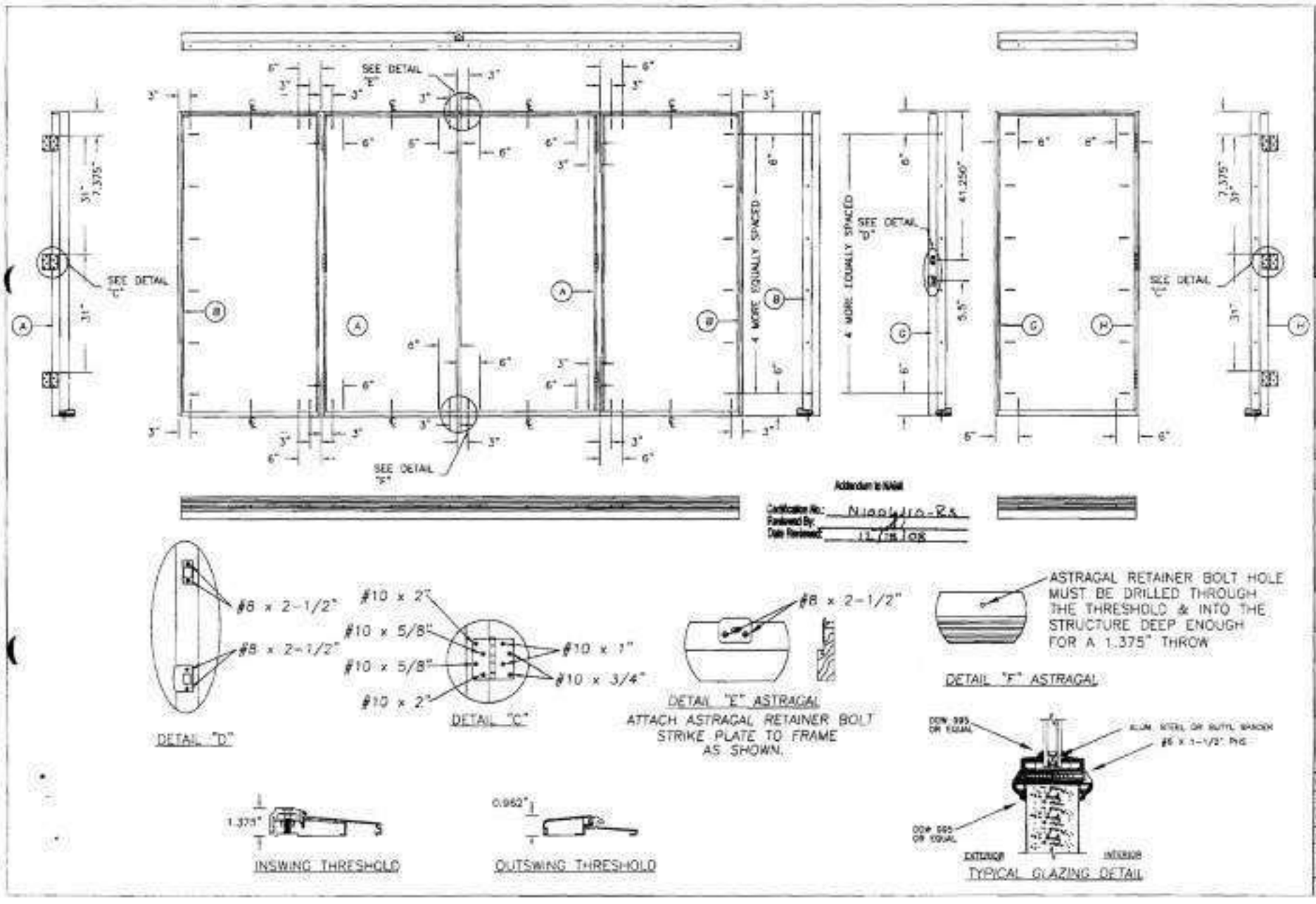

MASONITE INTERNATIONAL CORP.
7300 REAMES RD.
CHARLOTTE, NC 28216

PRODUCT: EXTERIOR DOOR PRODUCT DOUBLE 6'-8" GRADE WOOD-FRAME STEEL DOOR

PART OR ASSEMBLY: ANCHORING LOCATIONS & DETAILS

NO.	DATE	REVISIONS	BY
C	12/15/08	ADDED SPACER	SWS
B	1/2/08	HINGE SCREW LENGTH	SWS

DATE 7/11/05
SCALE N.T.S.
DWG. BY SWS
CHK. BY
DRAWING NO. DWG-MA-FLS128-05
SHEET 2 OF 3

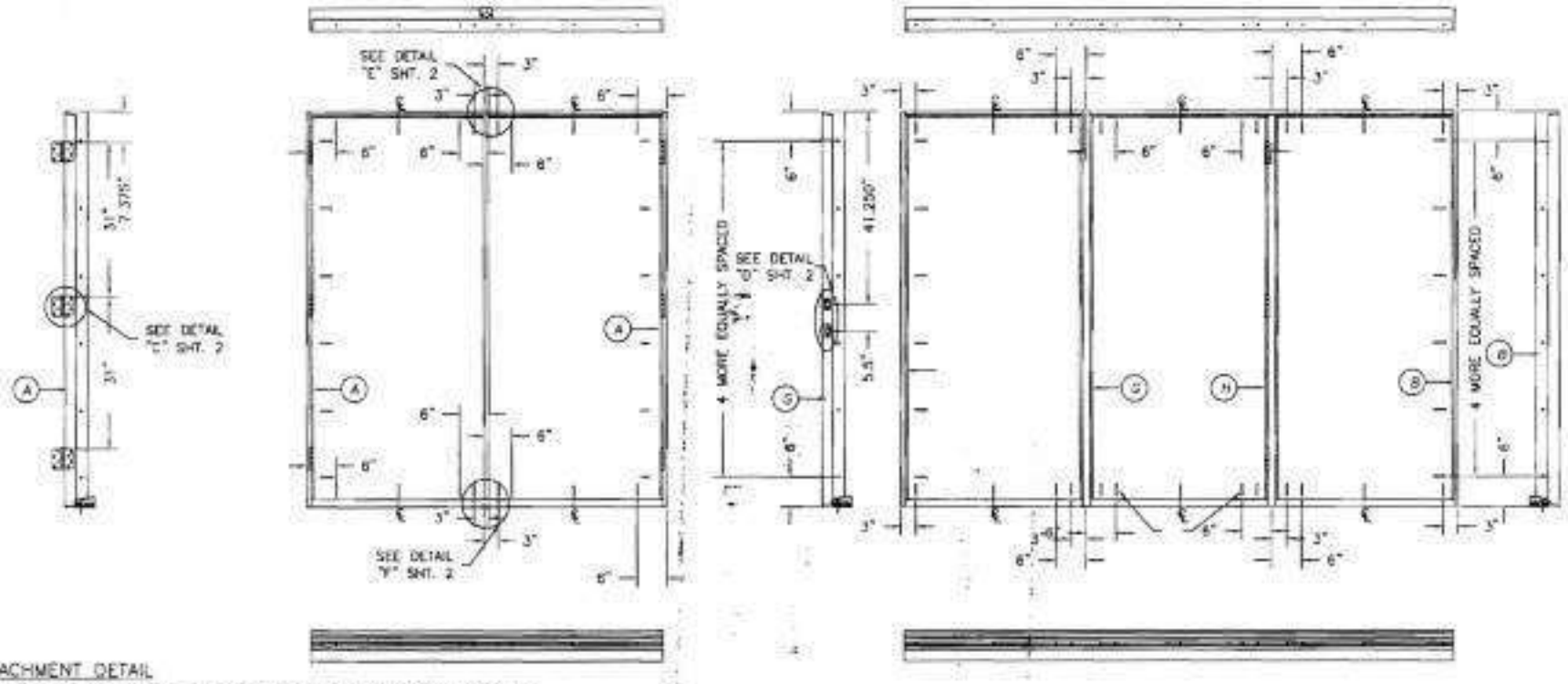

ATTACHMENT DETAIL

1. ANCHOR ANALYSIS FOR LOADING CONDITIONS PREPARED, SIGNED AND SEALED BY HAROLD E. RUPP, PE (FLORIDA #15935) WITH THE LOWEST (LEAST) FASTENER RATING FROM THE DIFFERENT FASTENERS BEING CONSIDERED FOR USE. JAMB, HEAD, AND THRESHOLD FASTENERS ANALYZED FOR THIS UNIT INCLUDE #10 WOOD SCREWS OR 3/16" TAPCONS. A PHYSICAL SHIM MUST BE PLACED IN SHIM SPACE AT EACH ANCHOR LOCATION.
2. THE WOOD SCREW SINGLE SHEAR DESIGN VALUES COME FROM ANSI/AF&PA NDA FOR SOUTHERN PINE LUMBER AND ACHEIVEMENT OF 1-1/2" MINIMUM EMBEDMENT. THE TAPCON MUST ACHIEVE MINIMUM EMBEDMENT OF 1-1/4".
3. WOOD BUCKS BY OTHERS MUST BE ANCHORED PROPERLY TO TRANSFER LOADS TO STRUCTURE.
4. MINIMUM DESIGN VALUE STRENGTH OF ANCHORS 171 LBS.

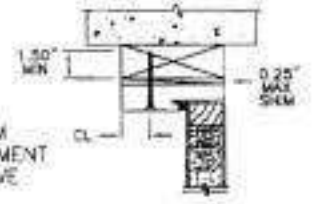

TYPICAL ANCHOR INSTALLATION

HARDWARE SCHEDULE

1.	KWIKSET MAXIMUM SECURITY SERIES GRADE 2 CYLINDRICAL AND DEADLOCK HARDWARE TO BE INSTALLED AT 5-1/2" CENTERLINE.
2.	4" X 4" FULL MORTISE BUTT HINGES

Addendum to NAMI

Certification No.: N1004110-R3
Reviewed By: [illegible]
Date Reviewed: 12/15/08

MASONITE INTERNATIONAL CORP.
7300 REAMES RD.
CHARLOTTE, NC 28216

PRODUCT: "EXTERIOR DOOR PRODUCT" 6' 8" WOOD EDGE STEEL DRAINE DOUBLE DOOR UNIT

PART OR ASSEMBLY: ANCHORING LOCATIONS & DETAILS

NO.	DATE	REVISIONS	BY
C	12/15/08	ADDED SPACER	SWS
B	1/2/08	HINGE SCREW LENGTH	SWS

DATE: 7/11/05
SCALE: N.T.S.
DWG. BY: SWS
CHK. BY:
DRAWING NO.: DWG-MA-FL0128-05
SHEET 3 OF 3

ROBERT G. ISHMAN P.A.
ARCHITECT
2117 HOLLYWOOD BLVD.
HOLLYWOOD, FLORIDA 33020
(954)929-9695
AR12684

DATE: 5/18/09

REPLACED SKYLIGHT
1404 JACKSON ST.
HOLLYWOOD, FL. 33020

ARCHITECTS PROJECT No. - 2901
PERMIT No - 808-100366

SKYLIGHT INSTALLATION SHALL COMPLY WITH N.O.A. REQUIREMENTS

S.S. FASTENERS BY SKYLIGHT MFG.

SLOPE DOWN
2 12 MIN.

SKYLIGHT BY OTHERS "VASCO" (GSHR)

"2x8" TREATED WOOD CURB (4) SIDES

CAULK

ROOF CAP SHEET

CONT. METAL FLASHING ALL SIDES

ROOF ANCHOR SHEET

PLYWOOD ROOF SHEATHING

1x2 WOOD FURRING @ 24" O.C.

½" GYPSUM WALL BOARD

R-5 INSULATION

WOOD ROOF TRUSS / JOIST

ROOF UPLIFT
SLOPED = -46.8 PSF

APPROVED
MAY 27 2009
CITY OF HOLLYWOOD, FLA.
STRUCTURAL

SECTION
SC 1½"=1'-0"

SIMPSON MFG.

① - A-35, (12) 8d x 1½" NAILS
F1/F2 - 450#, 600#.

② - H2.5A, (5) 8d NAIL TO TRUSS
(5) 8d NAIL TO CURB

UPLIFT = 520# PROVIDED
= 93# REQUIRED

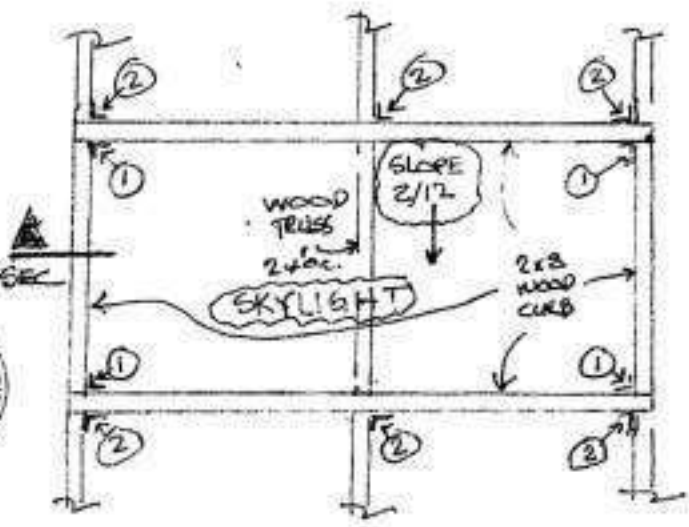

ROOF CURB PLAN SC 3/4"=1'-0"

B09100360

MIAMI-DADE

BUILDING CODE COMPLIANCE OFFICE (BCCO)
PRODUCT CONTROL DIVISION

MIAMI-DADE COUNTY, FLORIDA
METRO-DADE FLAGLER BUILDING
140 WEST FLAGLER STREET, SUITE 1603
MIAMI, FLORIDA 33130-1563
(305) 375-2901 FAX (305) 375-2908

NOTICE OF ACCEPTANCE (NOA)

Wasco Products Inc.
22 Pioneer Ave.
Sanford, ME 04073

SCOPE: This NOA is being issued under the applicable rules and regulations governing the use of construction materials. The documentation submitted has been reviewed by Miami-Dade County Product Control Division and accepted by the Board of Rules and Appeals (BORA) to be used in Miami Dade County and other areas where allowed by the Authority Having Jurisdiction (AHJ).

This NOA shall not be valid after the expiration date stated below. The Miami-Dade County Product Control Division (In Miami Dade County) and/or the AHJ (in areas other than Miami Dade County) reserve the right to have this product or material tested for quality assurance purposes. If this product or material fails to perform in the accepted manner, the manufacturer will incur the expense of such testing and the AHJ may immediately revoke, modify, or suspend the use of such product or material within their jurisdiction. BORA reserves the right to revoke this acceptance, if it is determined by Miami-Dade County Product Control Division that this product or material fails to meet the requirements of the applicable building code.
This product is approved as described herein, and has been designed to comply with the Florida building Code including the High Velocity Hurricane Zone.
DESCRIPTION: Wasco Model GSHR Aluminum and PVC Skylight
APPROVAL DOCUMENT: Drawing Number HR2004 titled "Hurricane Resistant Wasco Sky window Skylights Model GSHR", sheets No 1 through 6 of 6, prepared by Wasco Products, Inc. dated 07/19/04 with last revision on 08/11/05 bearing the Miami-Dade County Product Control Approval stamp with the Notice of Acceptance number and approval date by the Miami-Dade County Product Control Division.
MISSILE IMPACT RATING: Large & Small Missile Impact
LABELING: Each unit shall bear a permanent label with the manufacturer's name or logo, city, state and the following statement: "Miami-Dade County Product Control Approved or MDCPCA", unless otherwise noted herein and the laminate shall be properly marked by the laminators of Saflex PVB, Old castle Glass Group.
RENEWAL of this NOA shall not be considered after a renewal application has been filed and there has been no change in the applicable building code negatively affecting the performance of this product.
TERMINATION of this NOA will occur after the expiration date or if there has been a revision or change in the materials, use, and/or manufacture of the product or process. Misuse of this NOA as an endorsement of any product, for sales, advertising or any other purposes shall automatically terminate this NOA. Failure to comply with any section of this NOA shall be cause for termination and removal of NOA.
ADVERTISEMENT: The NOA number preceded by the words Miami-Dade County, Florida, and followed by the expiration date may be displayed in advertising literature. If any portion of the NOA is displayed, then it shall be done in its entirety.
INSPECTION: A copy of this entire NOA shall be provided to the user by the manufacturer or its distributors and shall be available for inspection at the job site at the request of the Building Official.

This NOA consists of this page, evidence page and approval document mentioned above
The submitted documentation was reviewed by **Candido F. Font, P.E.**

10/20/05

APPROVED
MAY 27 2009
CITY OF HOLLYWOOD, FLA.

NOA No. 04-0728.03
Expiration Date: October 20, 2010
Approval Date: October 20, 2005
Page 1

ROBERT G. ISHMAN P.A.
ARCHITECT
2117 HOLLYWOOD BLVD.
HOLLYWOOD, FLORIDA 33020

Approved 5-1-09

MIAMI-DADE

BUILDING CODE COMPLIANCE OFFICE (BCCO)
PRODUCT CONTROL DIVISION

MIAMI-DADE COUNTY, FLORIDA
METRO-DADE FLAGLER BUILDING
140 WEST FLAGLER STREET, SUITE 1603
MIAMI, FLORIDA 33130-1563
(305) 375-2901 FAX (305) 375-2908

NOTICE OF ACCEPTANCE (NOA)

Wasco Products Inc.
22 Pioneer Ave.
Sanford, ME 04073

SCOPE: This NOA is being issued under the applicable rules and regulations governing the use of construction materials. The documentation submitted has been reviewed by Miami-Dade County Product Control Division and accepted by the Board of Rules and Appeals (BORA) to be used in Miami Dade County and other areas where allowed by the Authority Having Jurisdiction (AHJ).

This NOA shall not be valid after the expiration date stated below. The Miami-Dade County Product Control Division (In Miami Dade County) and/or the AHJ (in areas other than Miami Dade County) reserve the right to have this product or material tested for quality assurance purposes. If this product or material fails to perform in the accepted manner, the manufacturer will incur the expense of such testing and the AHJ may immediately revoke, modify, or suspend the use of such product or material within their jurisdiction. BORA reserves the right to revoke this acceptance, if it is determined by Miami-Dade County Product Control Division that this product or material fails to meet the requirements of the applicable building code.
This product is approved as described herein, and has been designed to comply with the Florida building Code including the High Velocity Hurricane Zone.
DESCRIPTION: Wasco Model GSHR Aluminum and PVC Skylight
APPROVAL DOCUMENT: Drawing Number HR2004 titled "Hurricane Resistant Wasco Sky window Skylights Model GSHR", sheets No 1 through 6 of 6, prepared by Wasco Products, Inc. dated 07/19/04 with last revision on 08/11/05 bearing the Miami-Dade County Product Control Approval stamp with the Notice of Acceptance number and approval date by the Miami-Dade County Product Control Division.
MISSILE IMPACT RATING: Large & Small Missile Impact
LABELING: Each unit shall bear a permanent label with the manufacturer's name or logo, city, state and the following statement: "Miami-Dade County Product Control Approved or MDCPCA", unless otherwise noted herein and the laminate shall be properly marked by the laminators of Saflex PVB, Old castle Glass Group.
RENEWAL of this NOA shall not be considered after a renewal application has been filed and there has been no change in the applicable building code negatively affecting the performance of this product.
TERMINATION of this NOA will occur after the expiration date or if there has been a revision or change in the materials, use, and/or manufacture of the product or process. Misuse of this NOA as an endorsement of any product, for sales, advertising or any other purposes shall automatically terminate this NOA. Failure to comply with any section of this NOA shall be cause for termination and removal of NOA.
ADVERTISEMENT: The NOA number preceded by the words Miami-Dade County, Florida, and followed by the expiration date may be displayed in advertising literature. If any portion of the NOA is displayed, then it shall be done in its entirety.
INSPECTION: A copy of this entire NOA shall be provided to the user by the manufacturer or its distributors and shall be available for inspection at the job site at the request of the Building Official.

This NOA consists of this page, evidence page and approval document mentioned above
The submitted documentation was reviewed by **Candido E. Font, P.E.**

10/20/05

NOA No. 04-0728.03
Expiration Date: October 20, 2010
Approval Date: October 20, 2005

Wasco Products, Inc.

NOTICE OF ACCEPTANCE: EVIDENCE PAGE

A. DRAWINGS

1. Drawing prepared by Wasco Products, Inc., titled "Hurricane Resistant Wasco Sky window Skylights Models GSHR", drawing number HR-2004, dated 07/19/04, with last revision "D" dated 08/11/05, sheet 1 through 6 of 6, signed and sealed by L. B. Murray, PE.

B. TEST REPORTS

1. Test report on Large Missile Impact Test, per TAS 202, Cyclic Wind Pressure Test per TAS 203 and Uniform Static Air Pressure Test per TAS 201 on "Series/ Model: GSHR ", prepared by Architectural Testing, report No. 48655.04-122-18, dated 07/20/04, signed and sealed by S. M. Urich , PE.
2. Test report on Large Missile Impact Test, per TAS 202, Cyclic Wind Pressure Test per TAS 203 and Uniform Static Air Pressure Test per TAS 201 on "Series/ Model: EFHR", prepared by Architectural Testing, report No. 48653.04-122-18, dated 07/20/04, signed and sealed by S. M. Urich , PE.

C. CALCULATIONS

1. Anchor calculations, on page 1 of 6 of drawing HR-2004, dated 07/19/04 with last revision C dated 07/14/05 prepared by Wasco Products, Inc signed and sealed by L. B. Murray PE.

D. QUALITY ASSURANCE

1. Building Code Compliance Office.

E. STATEMENTS

1. Letter of No-financial interest issued by Wasco Products, Inc. dated 07/19/04, signed and sealed by W. A. Tillit, Jr. PE.
2. Code compliance letter issued by Tilteco, Inc., on 08/22/00, signed and sealed by W. A. Tillit, Jr. PE.
3. Notice of Acceptance # 05-0819.01 issue to Wasco Products, Inc on 10/13/05 and expiring on 10/13/10.

10/20/05

Candido F. Font, P. E.
Senior Product Control Examiner
NOA No. 04-0728.03
Expiration Date: October 20, 2010
Approval Date: October 20, 2005

GSHR HURRICANE RESISTANT
WASCO SKYWINDOW® SKYLIGHT

MODEL STANDARD SIZES	O.D. OF CURB LENGTH		O.D. OF CURB WIDTH	NAILS REQUIRED	DESIGN AREA (SQ. FT.)	WIND LOAD-PSF	TOTAL LOAD-LBS	LATERAL LOAD PER NAIL - LBS
2222	25 1/2	X	25 1/2	28	4.5	50	225.78	8.06
4622	49 1/2	X	25 1/2	40	8.75	50	438.28	10.98
4630	49 1/2	X	33 1/2	44	11.5	50	575.78	13.09
4646	49 1/2	X	49 1/2	52	17	50	850.78	16.36
2246	25 1/2	X	49 1/2	40	8.75	50	438.28	10.96
3046	33 1/2	X	49 1/2	44	11.5	50	575.78	13.09

American Forest & Paper Association (AF&PA) National Design Specification (per FBC Chapter 35 Section 3502). From Table C12.3-1 allowable lateral load for 8d nails is 85 lb/nail.
Maximum uplift for largest size is = $\frac{50 \text{ psf} \times 50\ 5/8" \times 50\ 5/8"}{144 \text{ sq in / sq ft}}$ = 890 lbs
890 lbs = 17.11 lb/nail<< 85 lb/nail allowable.
52 nails

DESIGN PRESSURES	
LARGE MISSLE IMPACT	WIND +50 P.S.F. −50 P.S.F.

NOTE:
1) ALL ROOFING DETAILS SHALL COMPY WITH CHAPTER 15 OF FLORIDA STATE BUILDING CODE
2) 4" MIN DISTANCE FROM LOWER LIP OF RETAINER TO SURFACE OF ROOF IS SHOWN FOR SHINGLE ROOF OR BUILT UP ROOF WITHOUT INSULATION. IF INSULATION AND/OR TILES ARE REQUIRED, THE THICKNESS OF EACH COMPONENT MUST BE ADDED TO MAINTAIN THE 4" DISTANCE
3) FASTENERS SUPPLIED BY INSTALLER MUST BE CAPABLE OF WITHSTANDING ALL LOADS IMPOSED ON THEM AND BE COMPATIBLE WITH ALUMINUM AND ALL ROOFING MATERIALS.

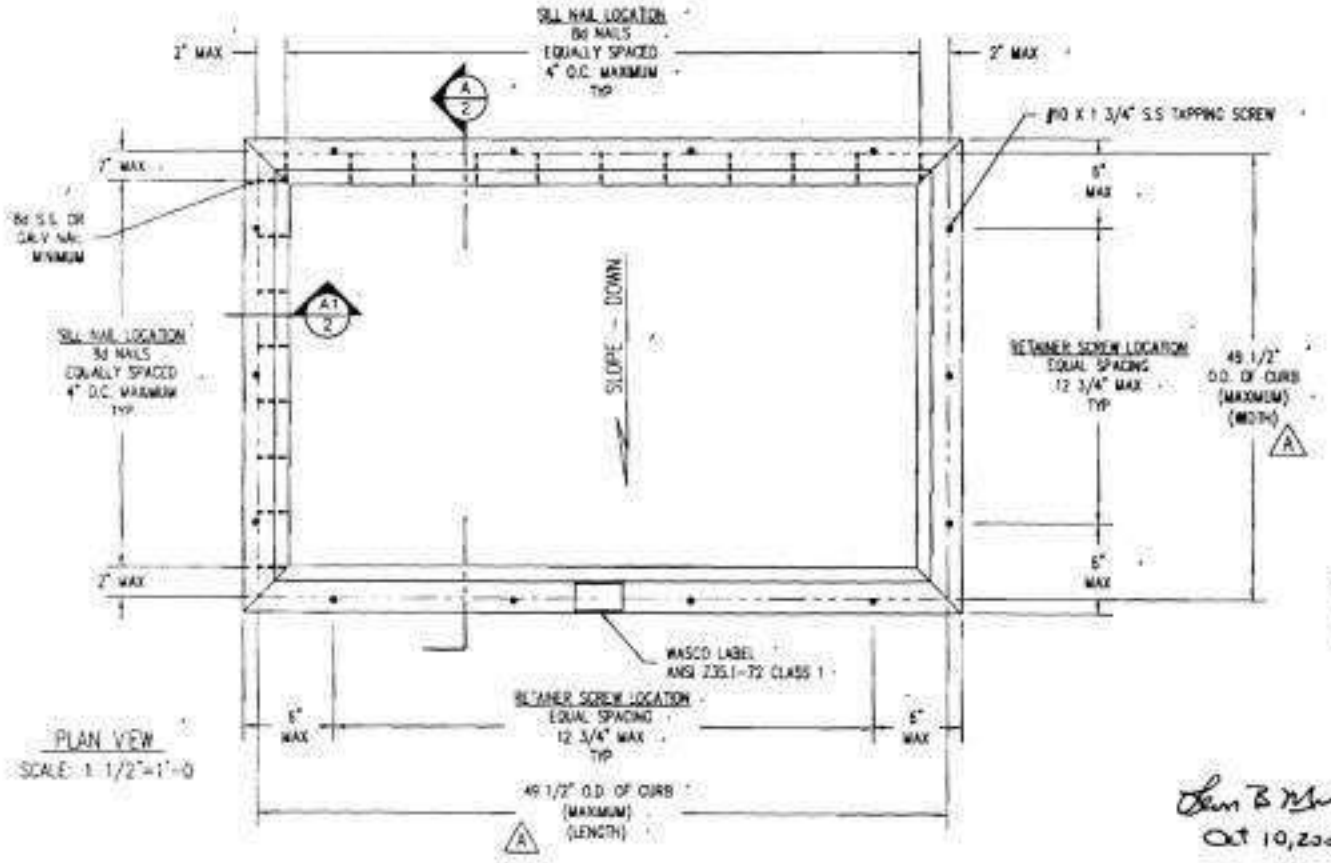

PLAN VIEW
SCALE: 1 1/2"=1'-0

Approved as complying with the Florida Building Code
Date
NOAA 04-0725-03
Miami Dade Product Control
Division
By

REV.	DRAFTER	CHECKER	DATE
E	NOA EXTRUSION	10/08/05	LPP	SSP
D	GENERAL	08/11/05	LPP	SSP
C	GENERAL	07/14/05	LPP	SSP
B	NO CHANGE THIS SHT.	03/11/05	SSP	D
A	ORIGINAL ISSUE	02/04/05	SSP	DS

REV.	DRAFTER	CHECKER	DATE
0	SCRIBNER	ABBOTT	07/19/04

DESCRIPTION: ALUMINUM CLAD PVC CURB MOUNTED FIXED SKYLIGHT

WASCO PRODUCTS, INC.
22 POWER AVE. PO BOX 359 SANFORD, MAINE 04073
(207) 324-8000 FAX (207) 490-1405

PRODUCT NAME: HURRICANE RESISTANT WASCO SKYWINDOW® SKYLIGHTS MODELS GSHR

DOCUMENT: HR-2004 | PAGE: 7 OF 8

ENGINEER: LEON B. MURRAY
DISCIPLINE: STRUCTURAL
REGISTRATION # 57110

Leon B Murray
Oct 10, 2005

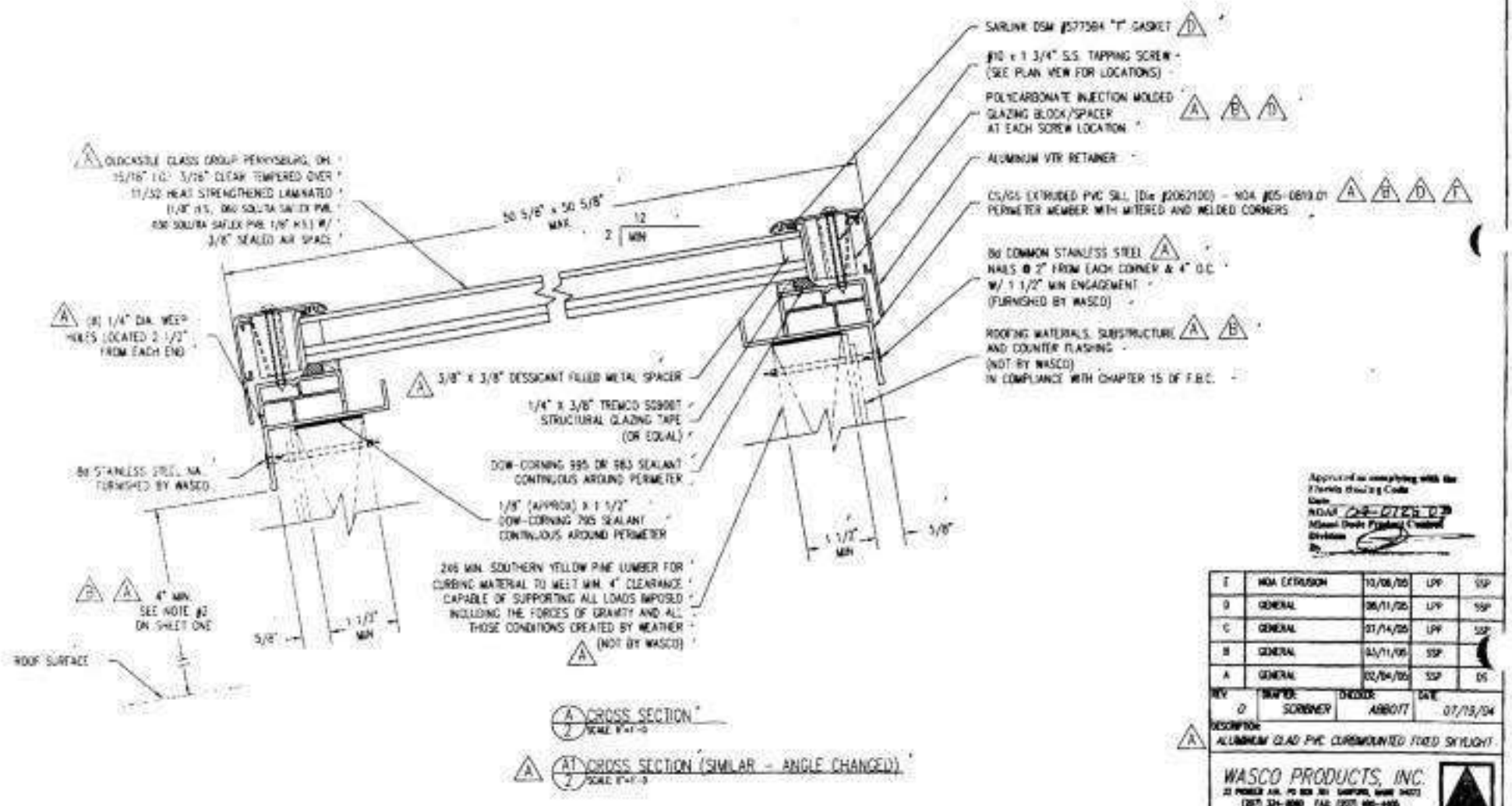

(A/2) CROSS SECTION
SCALE: 6"=1'-0"

(A) (A1/2) CROSS SECTION (SIMILAR - ANGLE CHANGED)
SCALE: 6"=1'-0"

Leon B. Murray
Oct. 10, 2005

Approved as complying with the Florida Building Code
Date
NOA# 04-0726.02
Miami-Dade Product Control
Division
By

REV	DESCRIPTION	DATE		
E	NOA EXTRUSION	10/06/05	LPP	SSP
D	GENERAL	08/11/05	LPP	SSP
C	GENERAL	07/14/05	LPP	SSP
B	GENERAL	05/11/05	SSP	
A	GENERAL	02/04/05	SSP	DS

REV	DRAFTER:	CHECKED:	DATE:
D	SCRIBNER	ABBOTT	07/13/04

(A) DESCRIPTION: ALUMINUM CLAD PVC CURBMOUNTED FIXED SKYLIGHT

WASCO PRODUCTS, INC.
22 POWDER AVE. PO BOX 351 SANFORD, MAINE 04073
(207) 324-8060 FAX (207) 490-4405

PRODUCT NAME: HURRICANE RESISTANT GLASS SKYWINDOW® SKYLIGHTS ACRYLITE GSW

DOCUMENT	PAGE
HR-2004	2 OF 6

DESIGNER: LEON B. MURRAY
DISCIPLINE: STRUCTURAL
REGISTRATION # 57710 (C)

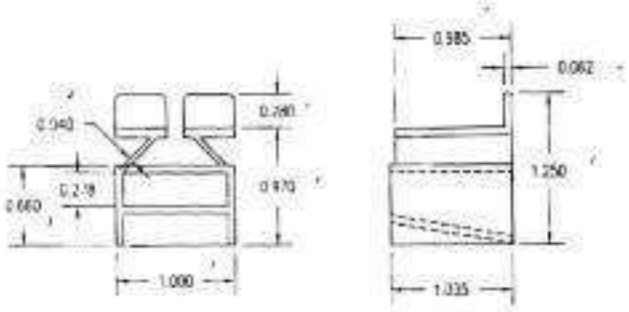

POLYCARBONATE INJECTION MOLDED GLAZING BLOCK (D)

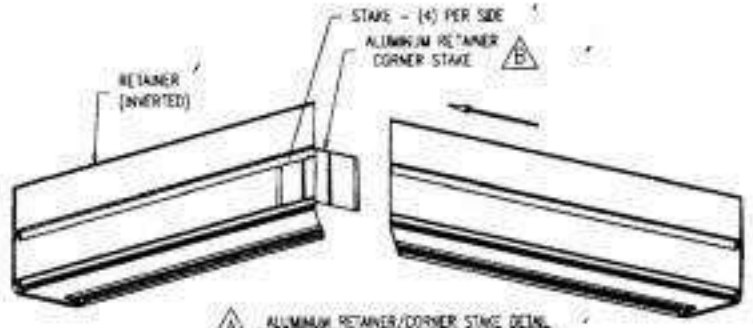

(A) ALUMINUM RETAINER/CORNER STAKE DETAIL
(B) UPSIDE DOWN

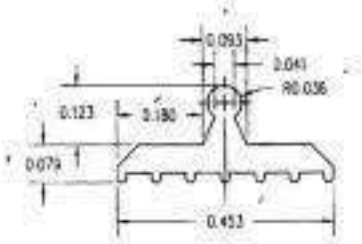

RETAINER GASKET
MATERIAL: SAFLINK DSM #577584 (D)

Approved to complying with the Florida Building Code
Date
PRJ#: 04-0728-03
Miami Dade Product Control
Division
By

E	NOA EXTRUSION	10/06/05	LPP	SSP
D	GENERAL	08/11/05	LPP	SSP
C	GENERAL	07/14/05	LPP	SSP
B	NOTES	03/11/05	SSP	DS
A	GENERAL	02/04/05	SSP	CHECKT

REV	DRAFTER	CHECKER	DATE
0	SCRIBNER	ABBOTT	07/19/04

(A) DESCRIPTION
ALUMINUM CLAD PVC CURBMOUNTED FIXED SKYLIGHT

WASCO PRODUCTS, INC.
33 PIONEER AVE. PO BOX 201 SANFORD, MAINE 04073
(207) 324-8068 FAX (207) 490-4405

PRODUCT NAME:
HURRICANE RESISTANT WASCO SKYWINDOW® SKYLIGHTS MODELS CSW

DOCUMENT	PAGE
HR-2004	3 of 6

ENGINEER:
LEON B. MURRAY
DISCIPLINE: STRUCTURAL
REGISTRATION # 57110 (C)

Leon B Murray
Oct. 10, 2005

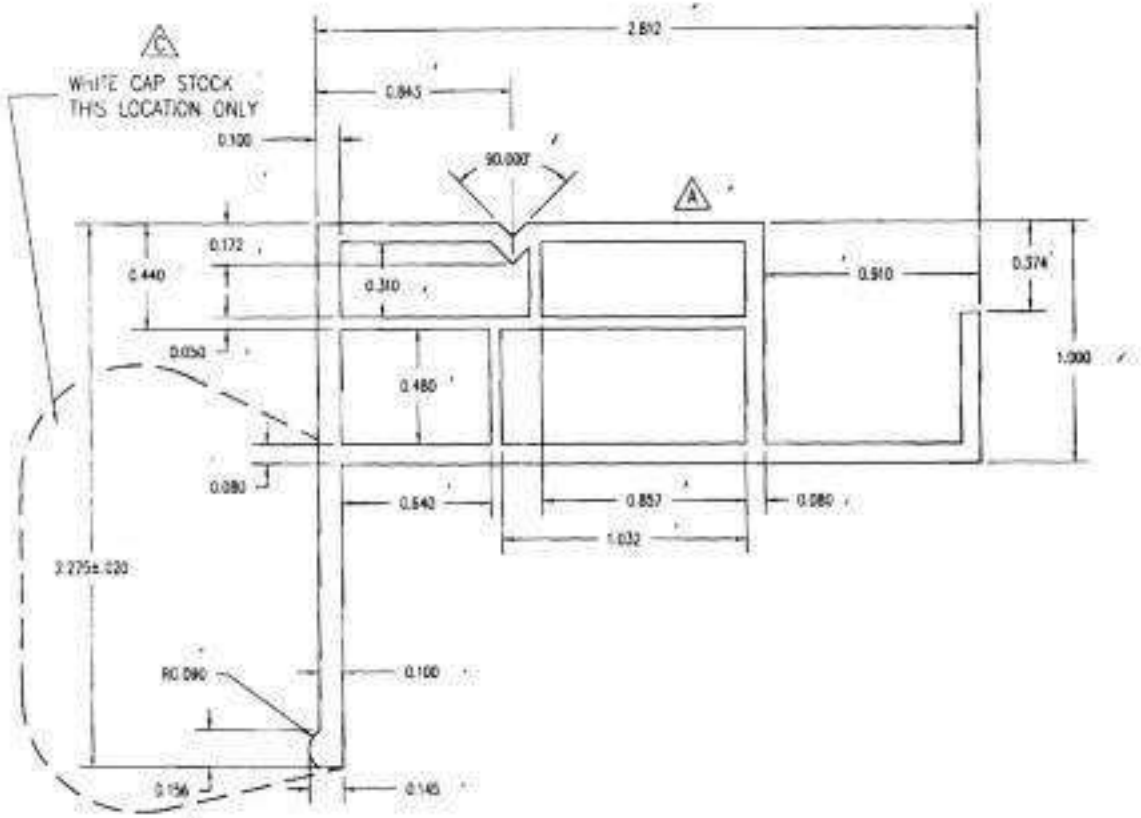

CS/GS EXTRUDED PVC SILL (Die #2062100) - NOA #05-0819.01
SCALE: 2"=1"

AS MANUFACTURED BY:
WASCO PRODUCTS INC.
22 PIONEER AVE.
SANFORD, ME 04073

GENERAL NOTES:
1. RIGID PROFILE
UNSPECIFIED DIMENSIONS: UNLESS OTHERWISE NOTED
EXTERNAL WALLS: 0.080±.008
INTERNAL WALLS: 0.050± .012
RADII: 0.018
DIMENSIONAL TOLERANCES PER ACTUAL STANDARDS UNLESS OTHERWISE NOTED
a. AREA OF CROSS SECTION: 2.154 SQR IN
2. PROFILE WEIGHT
a. TOTAL WEIGHT OF PROFILE INCLUDING RIGID AND CAP STOCK = 299± GRAMS.

MATERIAL NOTES:
1. CS/GS WHITE RIGID PVC EXTERIOR EXTRUSION PROFILE (Die #2062100) AS MANUFACTURED BY:

WASCO PRODUCTS INC.,
22 PIONEER AVE.
SANFORD, ME 04073

NOA # 05-0819.01

NOA 04-0727.03
Miami Dade Product Control
Division
By:

Oct. 10, 2005

E	NOA-EXTRUSION	10/06/05	LPP	SSP
D	GENERAL	08/11/05	LPP	SSP
C	GENERAL	07/14/05	LPP	SSP
B	NOTES	5/11/05	SSP	DS
A	NOTES	02/04/05	SSP	DS

REV:	DRAFTER:	CHECKER:	DATE:
0	SCRIBNER	ABBOTT	07/19/04

DESCRIPTION: ALUMINUM CLAD PVC CURBMOUNTED FIXED SKYLIGHT

WASCO PRODUCTS, INC.
22 PIONEER AVE. PO BOX 20 SANFORD, MAINE 04073
(207) 324-8000 FAX (207) 490-4400

PROJECT NAME: AMERICANE RESIDENT WASCO SKYWINDOW SKYLIGHTS MODELS CSW

DOCUMENT: NR-2004 | PAGE: 4 OF 6

ENGINEER: LEON B. MURRAY
DISCIPLINE: STRUCTURAL
REGISTRATION # 57110

CS/GS EXTRUDED PVC SILL NOA No. 05-0819.01
APPROVAL DATE: OCTOBER 20, 2005
EXPIRATION DATE: OCTOBER 20, 2010

PER AAMA LETTER DATED 07/20/05 TO DADE COUNTY.
PVC PROFILE TEST RESULTS MEET THE CRITERIA APPROVED BY DADE COUNTY.

NOTES:
1. UNLESS OTHERWISE SPECIFIED:
STANDARD ALUM. ASSOC. TOLERANCES APPLY
BREAK SHARP CORNERS R.015 MAX.
UNSPECIFIED RADII = .015

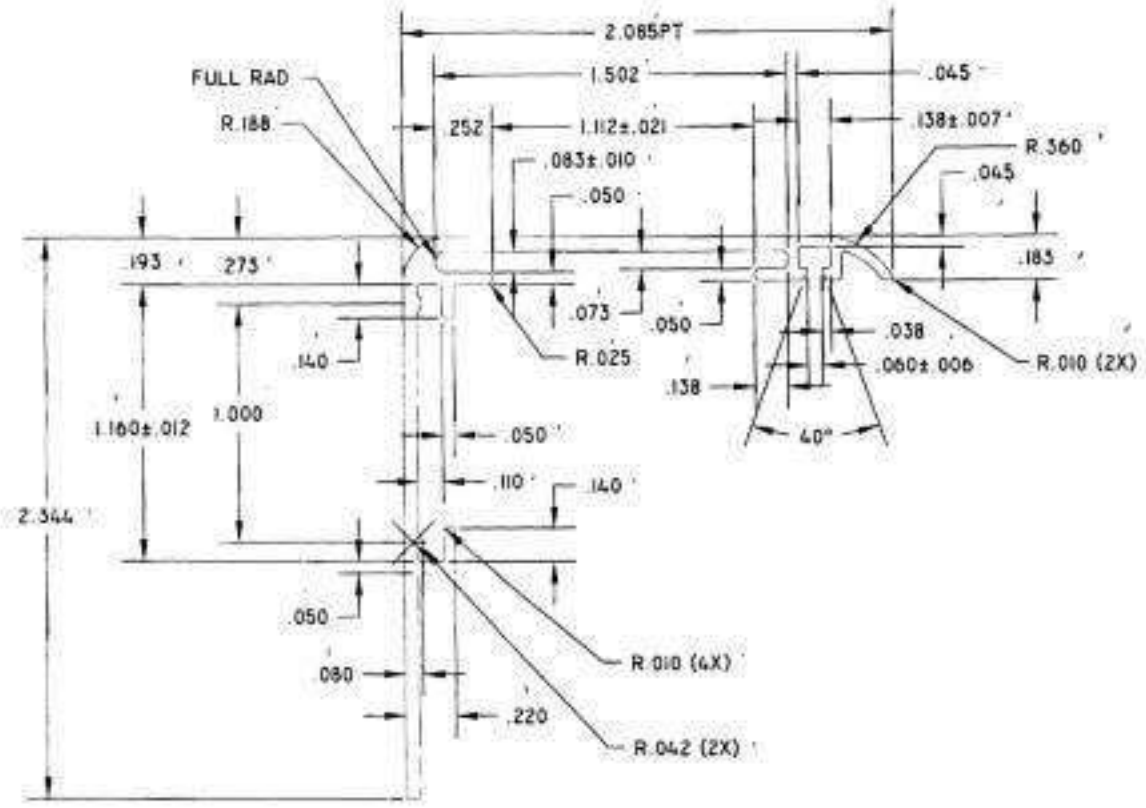

ALUMINUM VTR RETAINER
SCALE: 2"=1"

VITEX EXTRUSIONS		
AREA .317 SQ IN	CUSTOMER WASCO PRODUCTS	
PERIM 10.893 IN	PART NAME VTR RETAINER	DATE 1-17-04
WT./FT. .368 LBS	CUST DWG /REV 2119000	DWN BY NJS
MAT'L 6063-T5	SECTION NO. 900951	SCALE 2X

Oct 10, 2005

E	GENERAL	10/06/05	LPP	SSP
D	GENERAL	08/11/05	LPP	SSP
C	GENERAL	07/14/05	LPP	SSP
B	NO CHANGE THIS SHT.	03/11/05	SSP	SS
A	GENERAL	02/04/05	SSP	CHECK

REV	DRAFTER	CHECKER	DATE
D	SSP		1/24/05

DESCRIPTION
ALUMINUM CLAD PVC CURB MOUNTED FIXED SKYLIGHT

WASCO PRODUCTS, INC.
[illegible]

PRODUCT NAME
HURRICANE RESISTANT WASCO SKYWINDOW SKYLIGHTS MODELS CSW

DOCUMENT	PAGE
HR-2004	5 of 6

ENGINEER
LEON B. MURRAY
DISCIPLINE STRUCTURAL
REGISTRATION # 57110

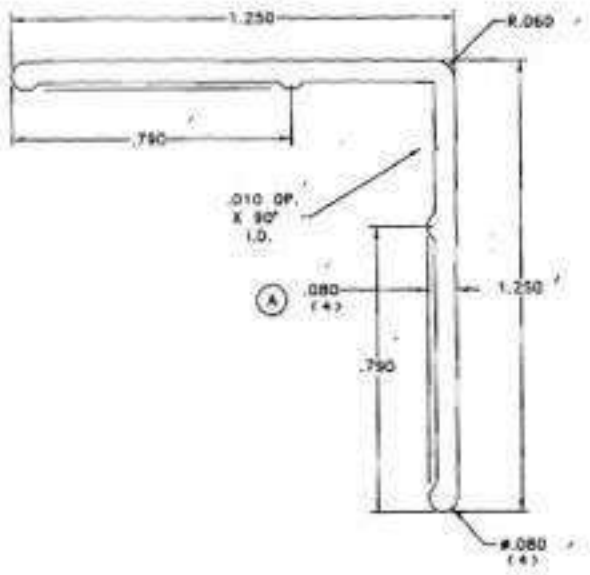

ALUMINUM RETAINER/CORNER STAKE
SCALE: 3"=1"

Approved as complying with the Florida Building Code
Unit
NOAA 04-0727.03
Miami Dade Product Control Division
By

E	MGA EXTRAVISION	10/08/05	LPP	SSP
D	GENERAL	08/11/05	LPP	SSP
C	GENERAL	07/14/05	LPP	SSP
B	NOTES	03/11/05	SSP	DS
A	GENERAL	02/04/05	SSP	DS

REV	DRAFTER	CHECKER	DATE
0	SSP		1/24/05

DESCRIPTION
ALUMINUM CLAD PVC CURB MOUNTED FIXED SKYLIGHT

WASCO PRODUCTS, INC.
15 PIONEER AVE. PO BOX 259 SANFORD, MAINE 04073
(207) 324-4000 FAX (207) 490-4425

PRODUCT NAME
AURORA RESEARCH MASS SKYWINDOW® SKYLIGHT MODELS CSW

DOCUMENT: HR-2004
PAGE: 6 OF 6

ENGINEER
LEON B. MURRAY
DISCIPLINE: STRUCTURAL
REGISTRATION # 57110

Leon B. Murray
Oct 10, 2005

EST. AREA: 149	EST. PERIMETER: 4.997	Alcoa Extruded Construction Products
EST. WT. PER FT: 179	FACTOR: 28	CUSTOMER: WASCO F
STANDARD TOLERANCES FOR EXTRUDED PRODUCTS APPLY UNLESS SPECIFICALLY SHOWN OTHERWISE		CITY: SANFORD STATE: MAINE
REVISIONS	DATE	DESCRIPTION: KEY CIRCUMSCRIBED CIRCLE: 1-2
A ADDED DIM	7/31/2001	SCALE: 3X1 DRAWN BY: M.M. DATE: 12/12/2000 CUSTOMER NO.: 2090905
B ADDED CUST NO	9/28/2001	END USE CODE PRODUCT CLASS SOLID ■ HOLLOW □
ALL CORNERS .015 RADIUS UNLESS SPECIFIED	UNSPECIFIED WALL THICKNESS .060	ALLOY/TEMPER 6063-T5

ROBERT G. ISHMAN P.A.
A R C H I T E C T

TRANSMITTAL MAY 7, 2009

TO; CITY of HOLLYWOOD
ATTN; CHIEF BUILDING OFFICIAL

APPROVED
MAY 14 2009
CITY OF HOLLYWOOD, FLA.
STRUCTURAL

JOB ADDRESS- 1404 JACKSON ST.
HOLLYWOOD , FLORIDA 33020

REF; **SPECIAL INSPECTOR**

PERMIT / PROCESS NUMBER; B09-100-360

I HAVE BEEN RETAINED AS SPECIAL INSPECTOR TO PERFORM ALL DUTIES AS PER INSPECTIONS (INCLUDING BUT NOT LIMITED TO);

"ROOF TRUSS PLACEMENT"
"CONNECTIONS" SEC. 2218.2, 109.11.2.3

INSPECTIONS PERFORMED BY SPECIAL INSPECTORS, HIRED BY THE OWNER, ARE IN ADDITION TO MANDATORY INSPECTION PERFORMED BY THE CITY BUILDING DEPARTMENT.

UPON COMPLETION, I WILL SUBMIT COMPLETED LOG FORM AND SIGNED, SEALED STATEMENT OF COMPLETION.

INSPECTIONS LOG;
PILING INSTALLATION- April 4, 2009
STEEL COLUMN CONNECTIONS- April 12,2009
ROOF TRUSS PLACEMENT – April 16 , 2009 – Approval ----YES
CONNECTIONS FINAL – MAY 7, 2009- Approval----------YES

CERTIFICATE OF COMPLIANCE;

THE WORK DESCRIBED ABOVE HAS BEEN PERSONALLY INSPECTED BY THIS ARCHITECT AND WAS DONE IN ACCORDANCE WITH THE APPROVED STRUCTURAL PLANS AND/OR SPECIFICATIONS.

SIGNATURE _____ Date; MAY 7, 2009

SEAL

FILE- SPECIAL INSPECTOR

LICENSE NO. AR-0012684 / AA-C001769
2117 HOLLYWOOD BLVD., HOLLYWOOD, FLORIDA 33020
TEL (954) 929-9695 FAX (954) 929-9597

ROBERT G. ISHMAN P.A.
ARCHITECT

FILE: B09-100360

TRANSMITTAL Date: MAY 12, 2009

TO; CITY OF HOLLYWOOD- BUILDING DEPT.
REF; BUILDING PERMIT PROCESS No. B09-100360

PROJECT ADDRESS;
1404 JACKSON ST.
HOLLYWOOD, FLORIDA

ITEM; STUCCO LATH SOFFIT PROTECTION OF WOOD

DEAR BUILDING OFFICIAL;
PLEASE ACCEPT THE FOLLOWING FOR PROTECTION OF WOOD FOR STUCCO WIRE LATH.

1- THE WOOD TRUSS AND FRAMING MEMBERS SUPPORTING WIRE LATH FOR STUCCO SHALL RECEIVE A COATING OF 3M RUBBERIZED UNDERCOATING OF WHICH I APPROVE AS AN IMPERVIOUS MOISTURE BARRIER (F.B.C. 2304.4)

APPROVED
MAY 12 2009
CITY OF HOLLYWOOD, FLA.
STRUCTURAL

Sincerely, ROBERT ISHMAN

Date; 5-12-09

Approved x

Robert Ishman- ARCHITECT
Ar12684

LICENSE NO. AR-0012684 / AA-C001769
2117 HOLLYWOOD BLVD., HOLLYWOOD, FLORIDA 33020
TEL (954) 929-9695 / FAX (954) 929-9597

ROBERT G. ISHMAN P.A.
ARCHITECT

TRANSMITTAL APRIL 27, 2009

TO; CITY of HOLLYWOOD
ATTN; CHIEF BUILDING OFFICIAL

JOB ADDRESS- 1404 JACKSON ST.
HOLLYWOOD , FLORIDA 33020

REF; **SPECIAL INSPECTOR**

PERMIT / PROCESS NUMBER; B09-100-360

I HAVE BEEN RETAINED AS SPECIAL INSPECTOR TO PERFORM ALL DUTIES AS PER SEC. 2122.4, SPECIAL INSPECTIONS (INCLUDING BUT NOT LIMITED TO);

"ROOF TRUSS PLACEMENT"

INSPECTIONS PERFORMED BY SPECIAL INSPECTORS, HIRED BY THE OWNER, ARE IN ADDITION TO MANDATORY INSPECTION PERFORMED BY THE CITY BUILDING DEPARTMENT.

UPON COMPLETION, I WILL SUBMIT COMPLETED LOG FORM AND SIGNED, SEALED STATEMENT OF COMPLETION.

INSPECTIONS LOG;

ROOF TRUSS PLACEMENT – April 16 , 2009 – Approval YES

CERTIFICATE OF COMPLIANCE:
THE WORK DESCRIBED ABOVE HAS BEEN PERSONALLY INSPECTED BY THIS ARCHITECT AND WAS DONE IN ACCORDANCE WITH THE APPROVED STRUCTURAL PLANS AND/OR SPECIFICATIONS.

SIGNATURE Robert G. Ishman Date 4/27/09

SEAL

MAY 5 2009

FILE- SPECIAL INSPECTOR

LICENSE NO. AR-0012684 / AA-C001769
2117 HOLLYWOOD BLVD., HOLLYWOOD, FLORIDA 33020
TEL (954) 929 9695 / FAX (954) 929 9597

James Bushouse, P.E. Consulting Engineer

1176 SW 4 Court, Boca Raton, Fl. 33432

Intercounty Foundation, Inc. Helical Pile Log

Project	KONDOLF UNDERPINNING
Project Address	1404 JACKSON STREET
	HOLLYWOOD
	CLIENT: JOE HART BUILDER, INC.

Date Installed	4/6/2009
Client Phone	(954)812-7357
Client Fax	
Client E-mail	

Torque Requirement (ft*lbs)		1125	Kips	9	Helical Type		RS 2875.203	
Depth from the Tip of Helical Pile to Grade	Pile # 3	Pile # 1	Pile # 4	Pile # 2	Pile #	Pile #	Pile #	Pile #
5'	200	250	250	225				
6'	275	325	300	275				
7'	350	400	425	350				
8'	400	425	450	475				
9'	Ref at 8'	Ref at 8'	Ref at 8'	Ref at 8'				

Helix Diameter	10"

Notes

Pile depths measured from existing grade. All piles capped with a C150-0121 underpinning bracket.

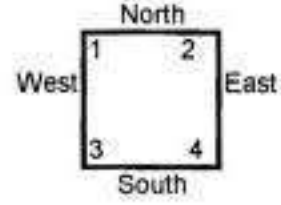

Depth from the Tip of Helical Pile to Grade	Pile #	Pile #	Pile #	Pile #	Pile #	Pile #	Pile #	Pile #

APPROVED

APR 27 2009

CITY OF HOLLYWOOD, FLA.
STRUCTURAL

This is to certify that all Helical piles are installed in accordance with approved plans and specifications and load capacities meet or exceed those specified.

SCANNED
APR 2011
BUILDING DIV

4/10/09

James Bushouse, P.E.
Professional Engineer #20311
State of Florida

Date

FILE: B09-100360

Date:	2-16-2009	
To:	Michael Sharbono Hollywood Building	
From:	Mark Scala, PE Staff, BCBRA	
Project:	Replace an Existing Roof 1404 Jackson St. Hollywood, FL	B09-100360
Architect:	Robert G. Ishman, PA 2117 Hollywood Blvd. Hollywood, FL 33020	Ph 954-929-9695
SEOR:	G. D. Klieger, Inc. 1909 Harrison Street #204 Hollywood, FL 33020-5017	Ph 954-923-2111 Fx 954-923-4949

Structural Review 2-12-2009
Comments:

1. The designer who prepares the structural calculations shall S&S the drawings.
2. Provide rational analysis on how the roof diaphragm gets to the top if the wall which provides the continuous load path to the foundation when the plywood diaphragm roof sheathing is ± 30" above the tie beam.
3. Provide reviewable wood truss connection calculations. The calculations should include a check of the manufacturer's unity equation.
4. Provide wind zone diagram for walls and roof for this unusual wall-roof configuration. Include uplift pressures for roofing material.
5. Confirm a note on S-1 which says h = 20.5'
6. Provide complete steel column calculations including uplift required and base to concrete connection.
7. After the steel column check, check the uplift on the helical piles. Plans and calculations call for a required 8ton gravity and 5ton uplift resistance. The soil report from Florida Testing says the helical piles are good for 5ton gravity and 2ton uplift resistance.
8. Designers please respond to Hollywood Building addressing each comment above.

Staff BCBRA,
A. Mark Scala, PE

2nd Review 3-24-2009

All issues have been satisfied.

AMS



ROBERT G. ISHMAN P.A.
A R C H I T E C T

TRANSMITTAL Date; MARCH 9, 2009

TO; CITY OF HOLLYWOOD- BUILDING DEPT.
REF; BUILDING PROCESS No. B09-100360

PROJECT ADDRESS;
1404 JACKSON ST.
HOLLYWOOD, FLORIDA

ITEM; PLAN REVIEW COMMENTS

THE FOLLOWING ARE ADDRESSING PLAN REVIEW COMMENTS.

PLANNING DEPT;
PROJECT WAS DISCUSSED ON 11-24-08, with Ms. Leander Hamilton
NO Historic Board review required for Roof Structure replacement.
SEE ATTACHED FRONT STREET ELEVATION PHOTO.

STRUCTURAL;
SEE ENGINEERS TRANSMITTAL & REVISED PLANS
SEE REVISED SOIL ENGINEERS REPORT- HELICAL PILES CAPACITY

Sincerely, ROBERT ISHMAN

LICENSE NO. AR-0012684 / AA-C001769
2117 HOLLYWOOD BLVD., HOLLYWOOD, FLORIDA 33020
TEL; (954) 929-9695 / FAX; (954) 929-9597

G.D. Klieger, Inc.
Consulting Structural Engineers
1909 Harrison Street, Suite 204
Hollywood, FL 33020-5017
Phone: (954) 923-2111
Fax: (954) 923-4949
E-mail: gk@gdkeng.com

March 9, 2009

To: Bob Ishman Architect

Re: 1404 Jackson St.
BD Structural Comments (2-16-09)

1. Drawings are Signed/Sealed by Engineer as requested.
2. The lateral Wind Reactions are being transferred by the plywood decking into the wood trusses perpendicular to the tie beam. The calculated reaction at each truss bearing end is Uplift/Downward and "F2" reactions only.
3. The calculations are checking the 'Unity Equations" as requested – see attached marked up calculation.
4. Wind Zones added to the Plans – as required.
5. The "Mean Roof Height = 20.5 ft." is correct, since the structure is about 12" above grade and we calculated the wind heights in reference to the grade elevation.
6. See added Anchor Bolt Calcs for Uplift.
7. Helical Pile capacity was corrected by Soil Testing Co.

Hopefully this provides you with the information requested.

G.D. Klieger, Inc.

3-9-09
Gershon D. Klieger, P.E.
FL PE #36109 (Structural)

MAR 25 2009
STRUCTURAL

SCANNED

G.D. Klieger, Inc. - Consulting Structural Engineers
1909 Harrison St., Ste 204, Hollywood, FL 33020
P: 954-923-2111 F: 954-923-4949
Gershon D. Klieger, PE FL. PE#36109

K9006

TRUSS TO WALL CONNECTION (FOR COMBINED UPLIFT + HORIZONTAL REACTIONS:

PROJECT: ROOF REPLACEMENT
1404 JACKSON ST., HOLLYWOOD, FL 01/23/2009

	TYP 8.0' Roof Truss (Lbs)	TYP 33.0' Roof GT (Lbs)
"MAIN-FRAME" NET WIND REACTIONS		
A. ROOF/FLOOR TRUSS:		
UPLIFT REACTION =	240	5,950
HORIZONTAL =	0	0
B. WALL:		
UPLIFT REACTION =	0	0
HORIZONTAL =	290	0
"COMPONENTS-CLADDING" - NET WIND REACTIONS		
C. ROOF/FLOOR TRUSS:		
UPLIFT REACTION =	550	9,900
HORIZONTAL =	0	0
D. WALL:		
UPLIFT REACTION =	0	0
HORIZONTAL =	500	0
GRAVITY (DOWNWARD) LOAD:		
GRAVITY REACTION =	0	0
E. CONNECTION TO WALL DATA:		
Connection Number (See Schedule)	1 + 2	3
Uplift Capacity Ucap =	1,155	11,150
Horizontal Capacity F2cap =	610	0
Gravity Capacity Gcap =	0	0
F. CAPACITY CHECK:		
F.1. ***Based on "Compo.-Cladd." Combination***		
UPLIFT (Truss + Wall) =	O.K.	O.K.
HORIZ. (Truss + Wall) =	O.K.	O.K.
F.2. ***Based on "Main-Frame" Combination***		
UPLIFT Ucalc/Ucap =	0.21	0.53
HORIZ. Hcalc/Hcap =	0.48	0.00
Sum U + H =	0.68	0.53
Is SUM < 1.00 ??	O.K.	O.K.
GRAV Gcalc/Gcap=	0.00	0.00

UNITY CHECK

UPLIFT $\frac{240}{1155}$ + HORIZ $\frac{290}{610}$ = 0.68

SCANNED

HILTI	Company:	Sheet 1 of 3
	Specifier:	Project:
User application	Address:	Contract No.:
PROFIS Anchor 1.12.0	Phone/Fax: - / -	Responsible:
http://www.us.hilti.com/	E-Mail:	Location/Date: - / 2/25/2009

3 pages

Specifier's comments:

Anchor type and size: → **HIT-RE 500 + HAS SUPER A 193 B7-3/4**
Effective embedment depth: h_{ef} = 4.39 in.
Material: ASTM A 193

Proof: design method: Hilti ASD from Hilti Product Technical Guide
Stand-off installation: e_b = 0.00 in. (no stand-off) ; t = 0.50 in.
Anchor plate: CUSTOM ; f_{ya} = 36000 psi ; l_x x l_y x t = 9.00 x 4.00 x 0.50 in.
Base material: uncracked concrete 3000, f_c' = 3000 psi; h = 12.00 in. , temperature: 32°F
Reinforcement: -

Anchor



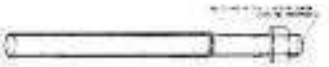

Geometry [in.]

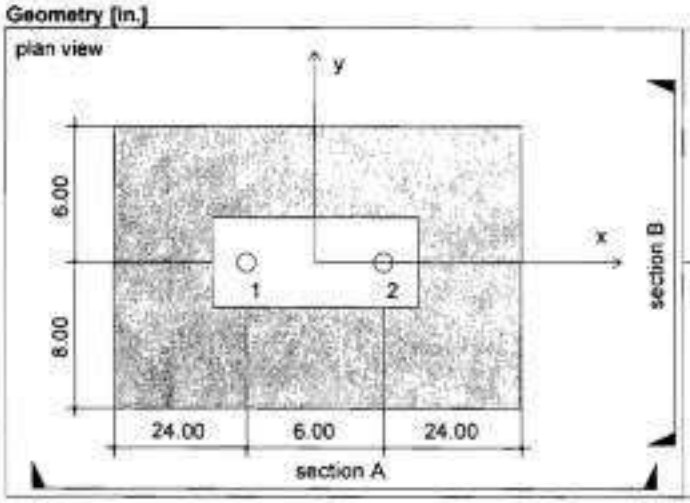

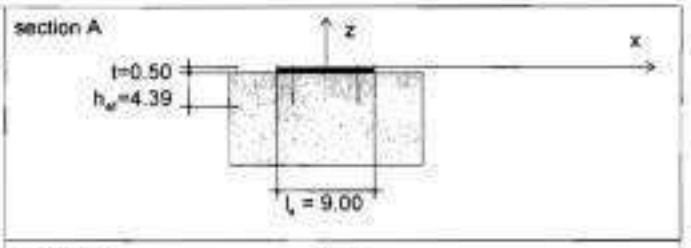

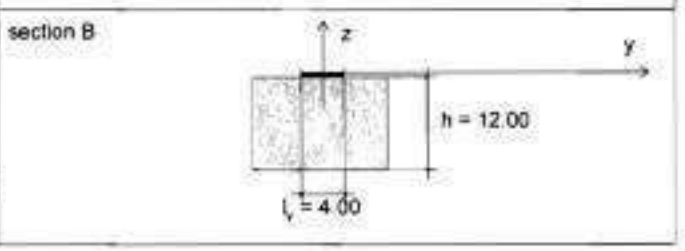

Loading

Governing loads [lb, in.-lb]

N = 9550
M_x = 0

V_y = 0
M_y = 0

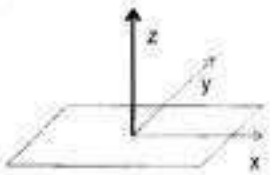

V_z = 0
M_z = 0

Governing loads [lb, in.-lb]

N	9550
V_x	0
V_y	0
M_x	0
M_y	0
M_z	0

Eccentricity (structural section) [in.]
e_x = 0.00 ; e_y = 0.00

Input data and results must be checked for agreement with the existing conditions and for plausibility!

PROFIS Anchor (c) 2003 Hilti AG, FL-9494 Schaan Hilti is a registered Trademark of Hilti AG, Schaan

Load case (governing):

Anchor reactions [lb]
Tension force: (+Tension -Pressure)

Anchor	Tension force	Shear force
1	4775	0
2	4775	0



max. concrete compressive strain [‰]: 0.00
max. concrete compressive stress [psi]: 0
resulting tension force [lb]: 9550
resulting compression force [lb]: 0

Loads on the critical anchor 1

	Design values [lb]		Utilization [%]	
Proof	Load	Strength	β_N / β_V	Status
Tension load	4775	4889	98 / -	OK

Combined tension and shear loads

β_N	β_V	α	Utilization $\beta_{N,V}$ [%]	Status
0.977	0.000	1.667	-	OK

$\beta_N^\alpha + \beta_V^\alpha <= 1$

Details

$f_{A,N}$	$f_{A,V}$	f_{RN}	f_{RV}	$f_{Red,Temp}$
0.960	0.960	0.960	0.613	1.000

all N_c[lb]	all V_c[lb]	all N_s[lb]	all V_s[lb]	all M[in.-lb]	N_{sa}[lb]	V_{sa}[lb]
5303	10874	18225	9390	4084	4889	6397

Fastening meets the design criteria!

Input data and results must be checked for agreement with the existing conditions and for plausibility!

PROFIS Anchor (c) 2003 Hilti AG, FL-9494 Schaan. Hilti is a registered Trademark of Hilti AG, Schaan.

Anchorplate, steel: CUSTOM f_{yk} = 36000 psi

Section type: I-section - S3X5.7 (3.00 x 2.33 x 0.17)
Hole diameter d_f = 0.83 in.
Recommended plate thickness: 0.75 in.

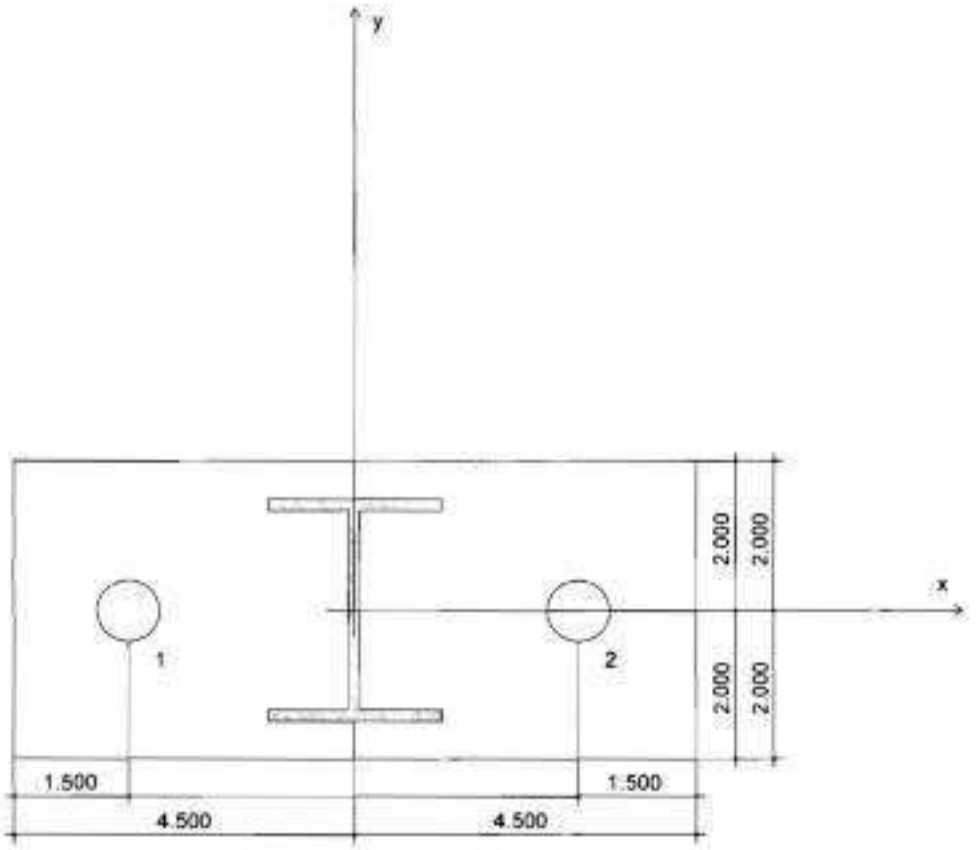

Coordinates Anchor [in.]

Anchor	x	y	Anchor	x	y
1	-3.00	0.00	2	3.00	0.00

Anchorplate [in.]

x	y	x	y
-4.50	2.00	4.50	-2.00
4.50	2.00	-4.50	-2.00

Input data and results must be checked for agreement with the existing conditions and for plausibility!

PROFIS Anchor (c) 2003 Hilti AG, FL-9494 Schaan Hilti is a registered Trademark of Hilti AG, Schaan

TABLE OF CONTENTS

I.) DISCLAIMER

II.) COVER LETTER

- SOIL STRATAS
- WATER LEVELS
- FOUNDATION RECOMMENDATIONS

III.) STANDARD (DYNAMIC CONE) PENETRATION LOG(S)

IV.) FIELD SKETCH

V.) MAP OF SUBJECT SITE

VI.) GENERAL NOTES

- KEY CLASSIFICATIONS & SYMBOLS

VII.) LIMITATIONS OF LIABILITY

DISCLAIMER

Our report findings are based on present onsite soil conditions encountered. **It is imperative that you read our reports in their entirety and follow all recommendations as listed.** Failure to follow our recommendations, may result in delays and additional costs due to permitting agencies (Building Department, etc.) withholding a Certificate of Occupancy for your proposed structure(s).

All recommendations shall be followed in order to receive a final certification, which may include but not be limited to density testing per lift of fill material, demucking verifications, piling inspections. In addition, these reports are for foundation analysis only and shall not be used for excavating, backfilling, or pricing estimates.

Please schedule us at least 24 hours in advance for all tests and inspections. If you choose to use another engineering firm for further testing and inspections, it is your responsibility to ensure that they provide you with the proper certification in writing, as outlined in our report.

FLORIDA ENGINEERING & TESTING, INC.

Phone: (866) 781-6889 • Fax: (866) 784-8550
www.floridaengineeringandtesting.com
250 S.W. 13th Avenue
Pompano Beach, FL 33069

January 13, 2009

Job Order No.: 09-252HJ

Joe Hart Builders
1500 S.W. 131st Way
Pembroke Pines, Florida 33027



RE: SUBSOIL INVESTIGATION
Proposed Roof Over Existing Residence
Kondolf Residence
1404 Jackson Street
Hollywood, Florida

Dear Sir or Madam;

Pursuant to your request, Florida Engineering & Testing, Inc., has completed a subsoil investigation on January 9, 2009, at the above referenced site. The purpose of our investigation was to verify subsoil conditions relative to foundation preparation and design.

A total of one (1) **SPT** boring(s) were performed according to **ASTM D-1586** down to a depth of thirty feet (30') below the existing ground surface (see attached field sketch for locations). The following is a general condition for the subject site:

Depth From	To	Soil Descriptions
0'0" -	4'0"	Brown Sand
4'0" -	8'0"	Dark Brown Sand with Slight Traces of Organics
8'0" -	30'0"	Limerock

Groundwater table elevation was measured immediately at the completion of the boring(s) and was found at five feet seven inches (5'7") below ground surface. Fluctuation in water levels should be anticipated due to surface runoff, tidal influences, seasonal variations, varying ground elevation, construction dewatering and pumping activities in the area. Site contractor must familiarize themselves with site conditions in the event groundwater controls and dewatering is needed. The contractor shall make sure that groundwater levels on adjacent properties are not affected by the contractors dewatering activities. Specialty groundwater contractors shall be consulted for all work below the groundwater level.

Quality QA Assurance

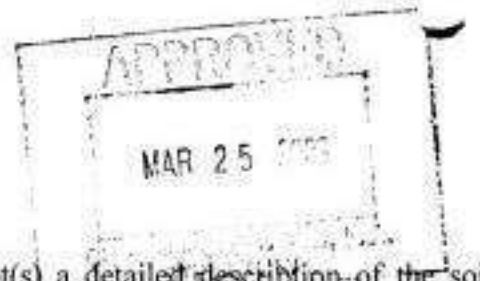



The boring log(s) attached present(s) a detailed description of the soils encountered at the test location(s). The soil stratification shown on the boring log(s) is based on the examination of the recovered soil samples and interpretation of the driller's field log(s). It indicates only the approximate boundaries between soil types. The actual transitions between adjacent soil types may be gradual.

Based on our understanding of the proposed structure and the information obtained from our field-boring log(s); it is evident that deep foundation systems are needed to support the proposed structure without detrimental settlement to the structure.

Deep foundation systems shall consist of one of the following alternatives:

Alternative Pile Foundation	Approximate Pile Depth	Size	Pile Capacity in Tons Compression	Pile Capacity in Tons Tension	Allowable Lateral Capacity in Tons
Pin Piles	To Refusal	3 Inches	5 Tons	2 Tons	N/A
Type A or B Helical Piles	20' - 25' BGL or Refusal	3 Inches	8 Tons	5 Tons	N/A
Auger Cast Piles	20' - 25' BGL	12 Inches	25 Tons	7 Tons	1 Ton
Auger Cast Piles	20' - 25' BGL	14 Inches	35 Tons	10 Tons	2 Tons
Precast Concrete Piles	20' - 25' BGL	10" X 10"	17 Tons	5 Tons	1 Ton
Precast Concrete Piles	20' - 25' BGL	12" X 12"	25 Tons	7 Tons	1 Ton
Precast Concrete Piles	20' - 25' BGL	14" X 14"	35 Tons	10 Tons	2 Tons

BGL - Below Ground Length

Estimated Lateral Load for a Pile Top Deflection of ¼ inch. The proposed pile length is based on the existing ground elevation at the time of drilling. Pile length may vary depending on proposed grade beam elevation and soil profile. The minimum center to center of piles or adjacent foundations shall be not less than twice the average diameter for round piles or 1 ¾ times the diagonal dimensions of rectangular piles, but in no case less than thirty (30) inches.

In the case of the pin, helical piles, or precast piles, a minimum of four (4) piles shall be driven to determine production pile length. Helical piles shall consist of Atlas, Change Ingal, or equivalent manufacturer. Helical pile final bearing capacity is determined in the field based on final achieved torque as per proprietary manufacturer specifications and shall be placed under the supervision of our geotechnical engineer to verify achieved bearing capacities.

All piles shall be designed by a professional engineer and shall be placed under supervision of our Geotechnical Engineer to verify compliance with our recommendations. A licensed pile contractor shall be consulted to determine actual pile depth and capacity. All work shall be in accordance with local building code and (if required) coastal zone construction requirements. All work shall be conducted by an experienced Florida Licensed Specialty Piling Contractor. The grout used in the pile installation shall develop a minimum compressive strength of 4,000 PSI at 28 days.

In case of existing structures in the vicinity of the pile driving operation, care shall be taken not to create excessive vibration. Vibration levels shall be monitored to verify compliance with county regulations. Steps must be taken to prevent excessive vibrations. In the event excessive vibrations are experienced during construction, alternative driving methods shall be implemented (i.e.: predrilling, jetting, hydraulic push, etc.)

The slab for the building area shall be designed as a structural slab spanning between supports and designed by a Florida Registered Structural Engineer and placed under the supervision of a Geotechnical Engineer to verify compliance with our recommendations.

If applicable, provisions shall be made by the architect, engineer of record and contractor to address differential settlements when tying in new to existing structures. If applicable, the seawall structure should be inspected to verify the structural integrity and prevent undermining due to the piling installation or excavation operations. Care should be taken to avoid damaging seawall tiebacks.

Regardless of the thoroughness of a Geotechnical exploration there is always a possibility that conditions may be different from those of the test location(s); therefore Florida Engineering & Testing, Inc., does not guarantee any subsoil condition surrounding the bore test hole(s). For a more accurate portrayal of subsurface conditions, the site contractor should perform tests pits. The discovery of any site or subsurface conditions during construction which deviate from the information obtained from our subsoil investigation is always likely and should be reported to us immediately for our evaluation. In accepting this report the client understands that all data from this soil boring report is intended for foundation analysis only and is not to be used for excavating, backfilling, or pricing estimates. The site contractor must familiarize themselves with the job site conditions prior to bidding.

As mutual protection to clients, the public, and ourselves, all reports are submitted as the confidential property of clients, and authorization for publication of statements, conclusions, or extracts from or regarding our reports is reserved pending our written approval. All work must be conducted under the supervision of our Geotechnical engineer. All work shall be conducted in compliance with the Florida Building Code FBC and OSHA workers protection rules and all applicable Federal, State, County and City rules and Regulations.

Florida Engineering & Testing, Inc., appreciates the opportunity to be of service to you at this phase of your project. If you have any questions or comments, please give us a call. We would be pleased to help any way we can. It has been a pleasure working with you and look forward to doing so in the near future.



Sincerely,

Keith LeBlanc, P.E. 3/5/09
Florida Engineering & Testing, Inc.
Florida Reg. No. 59394
• Certificate of Authorization No. 6923

SPT Test Boring Report

Client: Joe Hart Builders **Hole No:** B-1

Project: Proposed Roof Over Existing Residence **Date:** 1/9/09

Address: 1404 Jackson Street Hollywood, Florida

Location: See Attached Field Sketch

Depth (Ft)	Soil Descriptions	Hammer Blows	N	Penetration "N" Value (10 20 30 40)
	0' - 4' Brown Sand	4 4 5 3	9	
		2 2 4 2	6	
	4' - 8' Dark Brown Sand with Slight Traces of Organics	1 1 2 1	3	
		1 2 1 1	3	
	8' - 30' Limerock	16 24 32 41	56	
10		-- -- -- -- -- --	A	
		50' For 1" -- --	A	
		-- -- -- -- -- --	A	
		10 11 17 10	28	
20		-- -- -- -- -- --	A	
		6 5 7 6	12	
		-- -- -- -- -- --	A	
30		10 7 11 10	18	

Water Level: 5'7" **Below Land Surface**

As a mutual protection to clients, the public and ourselves, all reports are submitted as the confidential property of clients, and authorization for publication of statements, conclusions or extracts from or regarding our reports is reserved pending our written approval.

*A = Auger

Keith LeBlanc, P.E. 5/5/09
Florida Engineering & Testing, Inc.
Florida Reg. No. 59394
Certificate of Authorization No. 6923

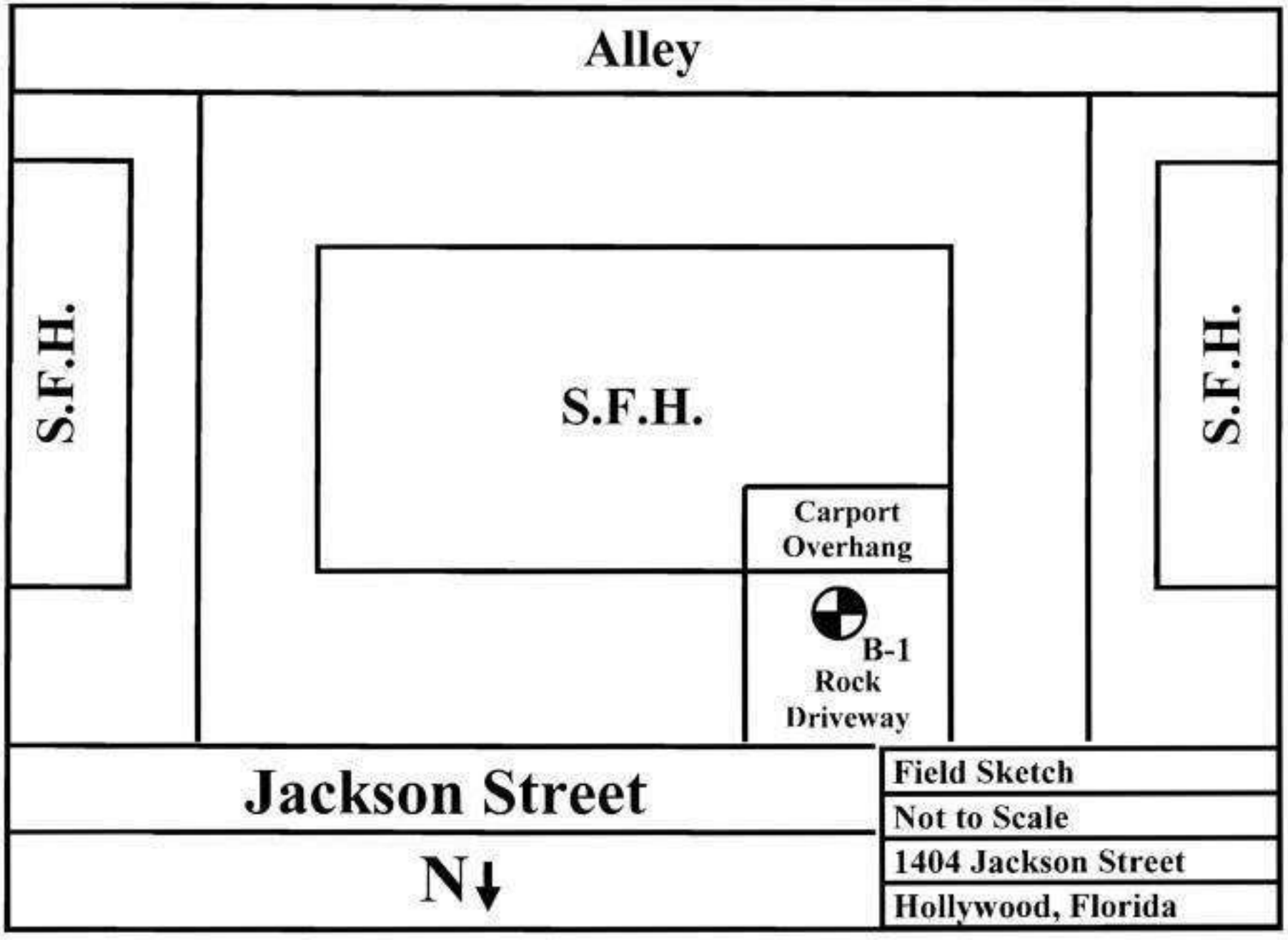
Alley
S.F.H.
S.F.H.
S.F.H.
Carport
Overhang
B-1
Rock
Driveway
Jackson Street
N
Field Sketch
Not to Scale
1404 Jackson Street
Hollywood, Florida

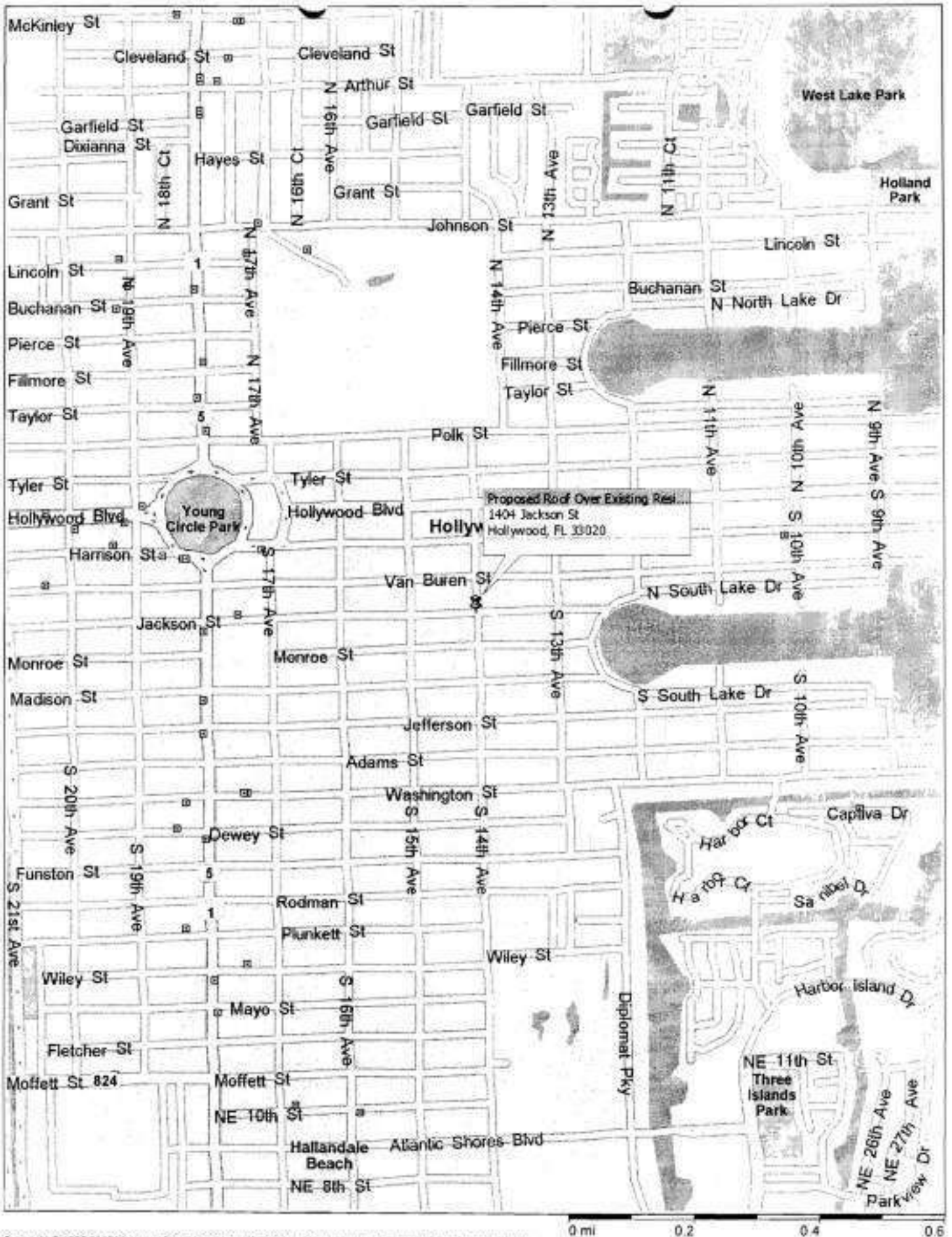

Copyright © 1988-2005 Microsoft Corp. and/or its suppliers. All rights reserved. http://www.microsoft.com/streets/
© 2004 NAVTEQ. All rights reserved. This data includes information taken with permission from Canadian authorities © Her Majesty the Queen in Right of Canada. © Copyright 2004 by TeleAtlas North America, Inc. All rights reserved.



GENERAL NOTES

- Soil boring(s) on unmarked vacant property or existing structure(s) to be demolished should be considered preliminary with further boring(s) to be performed after building pad(s) are staked out.
- As a mutual protection to clients, the public and ourselves, all reports are submitted as the confidential property of clients, and authorization for publication of statements, conclusions or extracts from or regarding our reports is reserved pending our written approval.
- It is not our field inspector's responsibility to supervise, schedule, or stop any phase of the project. His/her responsibility is limited by the duties stated in the contract.
- It is the client's responsibility to provide adequate safety for the site and personnel.

KEY CLASSIFICATIONS & SYMBOLS

Correlation of Penetration Resistance with Relative Density and Consistency

	Dynamic Cone Penetrometer (Penetrometer Resistance)	Standard Penetration (Hammer Blows)	Relative Density
Sands	0 - 10	0 - 3	Very Loose
	10 - 25	3 - 8	Loose
	25 - 45	8 - 15	Firm
	45 - 75	15 - 25	Very Firm
	75 - 120	25 - 40	Dense
	> 120	> 40	Very Dense
Silts & Clay	0 - 6	0 - 2	Very Soft
	6 - 15	2 - 5	Soft
	15 - 30	5 - 10	Firm
	30 - 45	10 - 15	Stiff
	45 - 90	15 - 30	Very Stiff
	90 - 150	30 - 50	Hard

Particle Size

Boulder	> 12in
Cobble	3 - 12in
Gravel	4.76mm - 3in
Sand	0.074mm - 4.76mm
Silt	0.005mm - 0.074mm
Clay	< 0.005mm

Modifiers

0 - 5%	Slightly Silty/Clayey
5 - 30%	Silty/Clayey
30 - 50%	Very Silty/Clayey
0 - 2%	Very Slight Trace
2 - 5%	Slight Trace
5 - 10%	Trace
10 - 15%	Little
15 - 30%	Some
> 30%	With

Rock Hardness Description

Soft	Rock core crumbles when handled.
Medium	Can break core with your hands.
Moderately Hard	Thin edges of rock core can be broken with fingers.
Hard	Thin edges of rock core cannot be broken with fingers.
Very Hard	Rock core rings when struck with a hammer.

LIMITATIONS OF LIABILITY



WARRANTY

We warrant that the services performed by Florida Engineering and Testing, Inc., are conducted in a manner consistent with the level of skill and care ordinarily exercised by members of the profession currently practicing under similar conditions. No other warranties, expressed or implied, are made. While the services of Florida Engineering & Testing, Inc., are an integral and valuable part of the design and construction process, we do not warrant, guarantee, or insure the quality or completeness of services or satisfactory performance provided by other members of the construction process and/or the construction plans and specifications which we have not prepared, nor the ultimate performance of building site materials.

As mutual protection to clients, the public and ourselves, all reports are submitted as the confidential property of clients, and authorization for publication of statements, conclusions or extracts from or regarding our reports is reserved pending our written approval.

SUBSURFACE EXPLORATION

Subsurface exploration is normally accomplished by test borings. The soil boring log includes sampling information, description of the materials recovered, approximate depths of boundaries between soil and rock strata and groundwater data. The log represents conditions specifically at the location and time the boring was made. The boundaries between different soil strata are indicated at specific depths; however, these depths are in fact approximate and dependent upon the frequency of sampling. The transitions between soil stratum are often gradual. Water level readings are made at the time the boring was performed and can change with time, precipitation, canal levels, local well drawdown, and other factors.

Regardless of the thoroughness of a Geotechnical exploration there is always a possibility that conditions may be different from those of the test locations; therefore Florida Engineering & Testing, Inc., does not guarantee any subsoil condition surrounding the bore test holes. For a more accurate portrayal of subsurface conditions, the site contractor should perform tests pits. If different conditions are encountered, Florida Engineering & Testing, Inc., shall be notified to review the findings and make any recommendations as needed.

LABORATORY AND FIELD TESTS

Tests are performed in accordance with specific ASTM Standards unless otherwise indicated. All criteria included in a given ASTM Standard are not always required and performed. Each test report indicates the measurements and determinations actually made.

ANALYSIS AND RECOMMENDATIONS

The Geotechnical report is prepared primarily to aid in the design of site work and structural foundations. Although the information in the report is expected to be sufficient for these purposes, it is not intended to determine the cost of construction or to stand alone as construction specifications. In accepting this report the client understands that all data from the soil boring is intended for foundation analysis only and is not to be used for excavating, backfilling or pricing estimates. The site contractor must familiarize themselves with the job site conditions.

Report recommendations are based primarily on data from test borings made at the locations shown on the test boring reports. Soil variations may exist between borings and may not become evident until construction. If variations are then noted, Florida Engineering & Testing, Inc., should be contacted so that field conditions can be examined and recommendations revised if necessary.

The Geotechnical report states our understanding as to the location, dimensions, and structural features proposed of the site. Any significant changes in the nature, design, or location of the site improvements must be communicated to Florida Engineering & Testing, Inc,, so that the Geotechnical analysis, conclusions, and recommendations can be appropriately adjusted.

CONSTRUCTION OBSERVATIONS

Construction observation and testing is an important element of Geotechnical services. The Geotechnical Engineer's Field Representative (Field Rep.) is the "owner's representative" observing the work of the contractor, performing tests, and reporting data from such tests and observations. The Geotechnical Engineer's Field Representative does not direct the contractor's construction means, methods, operations, or personnel. The Field Rep. does not interfere with the relationship between the owner and the contractor, and except as an observer, does not become a substitute owner on site. The Field Rep. is only collecting data for our Engineer to review.

The Field Rep. is responsible for his/her safety only, but has no responsibility for the safety of other personnel and/or the general public at the site. If the Field Rep. does not feel that the site is offering a safe environment for him/her, the Field Rep. will stop his/her observation/ testing until he/she deems the site is safe. The Field Rep. is an important member of a team whose responsibility is to observe the test and work being done and report to the owner whether that work is being carried out in general conformance with the plans and specifications.

MIAMI-DADE COUNTY

BUILDING CODE COMPLIANCE OFFICE (BCCO)
PRODUCT CONTROL DIVISION

MIAMI-DADE COUNTY, FLORIDA
METRO-DADE FLAGLER BUILDING
140 WEST FLAGLER STREET, SUITE 1603
MIAMI, FLORIDA 33130-1563
(305) 375-2901 FAX (305) 375-2908
www.buildingcodeonline.com

RECEIVED
MAR 25 2009
STRUCTURAL

NOTICE OF ACCEPTANCE (NOA)

Jeld - Wen
3250 Lakeport Blvd.
Klamath Falls, OR 97601

SCOPE:

This NOA is being issued under the applicable rules and regulations governing the use of construction materials. The documentation submitted has been reviewed by Miami-Dade County Product Control Division and accepted by the Board of Rules and Appeals (BORA) to be used in Miami Dade County and other areas where allowed by the Authority Having Jurisdiction (AHJ).

This NOA shall not be valid after the expiration date stated below. The Miami-Dade County Product Control Division (In Miami Dade County) and/or the AHJ (in areas other than Miami Dade County) reserve the right to have this product or material tested for quality assurance purposes. If this product or material fails to perform in the accepted manner, the manufacturer will incur the expense of such testing and the AHJ may immediately revoke, modify, or suspend the use of such product or material within their jurisdiction. BORA reserves the right to revoke this acceptance, if it is determined by Miami-Dade County Product Control Division that this product or material fails to meet the requirements of the applicable building code.

This product is approved as described herein, and has been designed to comply with the Florida Building Code, including the High Velocity Hurricane Zone.

DESCRIPTION: Series "6-8" Outswing" Glazed Steel Door – L.M.I.

APPROVAL DOCUMENT: Drawing No. **JW0509-03-01**, titled "Impact Glazed Steel Door Outswing 6'-8" Lip Lite", sheets 1 through 6, of 6 prepared by Jeld-Wen, Inc., dated 09/06/05 with revision **"B"** 04/08/06, signed and sealed by James J. Dobrowski, P. E., bearing the Miami-Dade County Product Control Approval stamp with the Notice of Acceptance number and approval date by the Miami-Dade County Product Control Division.

MISSILE IMPACT RATING: Large and Small Missile Impact

LABELING: Each unit shall bear a permanent label with the manufacturer's name or logo, city, state and following statement: "Miami-Dade County Product Control Approved", unless otherwise noted herein.

RENEWAL of this NOA shall be considered after a renewal application has been filed and there has been no change in the applicable building code negatively affecting the performance of this product.

TERMINATION of this NOA will occur after the expiration date or if there has been a revision or change in the materials, use, and/or manufacture of the product or process. Misuse of this NOA as an endorsement of any product, for sales, advertising or any other purposes shall automatically terminate this NOA. Failure to comply with any section of this NOA shall be cause for termination and removal of NOA.

ADVERTISEMENT: The NOA number preceded by the words Miami-Dade County, Florida, and followed by the expiration date may be displayed in advertising literature. If any portion of the NOA is displayed, then it shall be done in its entirety.

INSPECTION: A copy of this entire NOA shall be provided to the user by the manufacturer or its distributors and shall be available for inspection at the job site at the request of the Building Official.

This NOA consists of this page 1 and evidences page E-1 and E-2, as well as approval document mentioned above.

The submitted documentation was reviewed by **Jaime D. Gascon, P.E.**

Approved 1/22/09

PRODUCT CONTROL ACCEPTED

J. Gascon 5/5/06

ROBERT G. ISHMAN P.A.
ARCHITECT
2117 HOLLYWOOD BLVD.
HOLLYWOOD, FLORIDA 33020

NOA No 05-1215.01
Expiration Date: May 25, 2011
Approval Date: May 25, 2006

Jeld-Wen, Inc.

NOTICE OF ACCEPTANCE: EVIDENCE SUBMITTED

A. DRAWINGS

1. Manufacturer's parts and sections drawings.
2. Drawing No **"JW0509-03-01"**, titled "Impact Glazed Steel Door Outswing 6'-8" Lip Lite", sheets 1 through 6 of 6, prepared by Jeld-Wen , Inc., dated 09/06/05 with revision "**B**" on 04/08/06, signed and sealed by James J. Dobrowski , P. E.

B. TESTS

1. Test reports on 1) Air Infiltration Test, per FBC, TAS 202-94
   2) Uniform Static Air Pressure Test, Loading per FBC, TAS 202-94
   3) Water Resistant Test, per FBC, TAS 202-94
   4) Large Missile Impact Test per FBC, TAS 201-94
   5) Cyclic Wind Pressure Loading per FBC, TAS 203-94
   6) Forced Entry Test, per FBC 2411 3.2.1, TAS 202-94

   Along with marked-up drawings and installation diagram of outswing steel door, prepared by National Certified Testing Laboratories, Test Report No. **NCTL 210-3195-1** dated 9/28/05, signed and sealed by Gerard John Ferrara, P.E.

C. CALCULATIONS:

1. Anchor Calculations and structural; analysis, prepared by Jeld-Wen, Inc., dated 11/04/05, singed and sealed James J. Dobrowski , P. E.
   Complies with ASTM E 1300-98

D. QUALITY ASSURANCE

1. Miami Dade Building Code Compliance Office (BCCO).

E. MATERIAL CERTIFICATIONS

1. Notice of Acceptance No. **03-0827.08** issued to Solutia Inc. for "Clear or Colored Interlayer" dated 03/04/04, expiring on 03/04/09.
2. Test report No.**J99006660-001**, dated 04/08/99, for "Surface Burning Characteristics of Building Materials" per ASTM E84-97A for the Dylite Expandable Polystyrene, issued by Intertek Testing Service NA Inc.
3. Test report No.**J99006660-001**, dated 04/08/99, for "Test Method for Ignition Properties of Plastics, Procedure B, Short Method" per ASTM D1929-91 for the Dylite Expandable Polystyrene, issued by Intertek Testing Service NA Inc.
4. Test report No.**ATI-61782.01-106-31**, dated 01/14/06, for "Standard Test Methods for Tension Testing of Metallic Materials" per ASTM E8-01 for Steel Door Skin, issued by Architectural Testing, Inc.
5. Notice of Acceptance No. **03-0428.02** issued to ODL Inc. for "ODL/Western Reflection Series Aluminum Glazed Lite Kit Assembly-Impact" dated 07/28/05, expiring on 07/28/10.

Jaime D. Gascon, P.E.
Chief, Product Control Office
NOA No 05-1215.01
Expiration Date: May 25, 2011
Approval Date: May 25, 2006

Jeld-Wen, Inc.

NOTICE OF ACCEPTANCE: EVIDENCE SUBMITTED

F. STATEMENTS

1. Statement Letter of conformance and letter of "No financial interest" issued Jeld-Wen, dated 11/02/05, signed and sealed by Steve Saffell.
2. Statement Letter of conformance and letter of "No financial interest" issued by David Evans and Associates, Inc., dated 11/04/05, signed and sealed by James Dobrowski, P.E.

G. OTHER

1. Letter form the consultant, dated 03/24/06, stating that the product is in compliance with the Florida Building Code (FBC).

Jaime D. Gascon, P.E.
Chief, Product Control Office
NOA No 05-1215.01
Expiration Date: May 25, 2011
Approval Date: May 25, 2006

JELD-WEN® Steel

WOOD EDGE IMPACT GLAZED INSULATED STEEL DOOR
6-8 OUTSWING SINGLE OR DOUBLE DOOR UNIT
UTILIZING COMPONENTS FROM ODL® INC. AND
ENDURA PRODUCTS INC.

GENERAL NOTES

1. THIS PRODUCT IS DESIGNED TO MEET THE FLORIDA BUILDING CODE INCLUDING "HVHZ".
2. WOOD BUCKS BY OTHERS, MUST BE ANCHORED PROPERLY TO TRANSFER LOADS TO THE STRUCTURE.
3. PRODUCT ANCHORS SHALL BE AS LISTED AND SPACED AS SHOWN ON DETAILS. ANCHOR EMBEDMENT TO BASE MATERIAL SHALL BE BEYOND WALL DRESSING ON STUCCO.
4. DESIGNED PRESSURE RATING SEE TABLE I, PAGE 1.
5. THIS PRODUCT MEETS THE WATER REQUIREMENTS FOR HIGH VELOCITY HURRICANE ZONE (HVHZ).
6. PRODUCT DOES NOT REQUIRE SHUTTERS.

RESIDENTIAL INSULATED STEEL DOOR (Common to all frame conditions)

DOOR LEAF CONSTRUCTION

Face sheets: 24 GA (0.021" min) thickness. Galvanized steel A-525 commercial quality AKDO per ASTM 620 with average minimum yield strength Fy(ave)=30627 psi.

Core Design: Expanded polystyrene with 1.0 to 1.25 lbs density, by Jeld-Wen Inc.

Panel Construction: The active and inactive panels are constructed from 24 GA (0.021" min) galvanized steel. The face sheets at top and bottom are bent 90° over the top and bottom rails. The top rail measures 1.0" high x 1.688" wide. The steel bottom rail measures 1.21" high x 1.688" wide. The sides of the face sheets are roll formed into the latch and hinge sides which measure 1.00" high x 1.688" wide. The interior cavity is filled with expanded polystyrene. The face sheets are glued to the expanded polystyrene. The panels are cut out for the two-piece ODL Aluminum lite frame. Units are glazed with tempered and laminated impact 1" IG. On double door applications the inactive door is fitted with an extruded aluminum astragal of 6063-T5 alloy, manufactured by Endura.

Frame Construction: The frames are constructed of fingerjointed pine jambs measuring 4-9/16" x 1-1/4". The head jambs are mortised and butt joined to the side jambs, and attached with three (3) 16GA 7/16" crown x 2" long staples on each side. The threshold is attached to the side jambs with three (3) 16GA 7/16" crown x 2" long staples on each side. The units use an inswing adjustable threshold.

Glazing: ODL insulated lite is 1" overall thickness, consisting of one (1) pane of 0.125" tempered glass, 0.5" air space, two (2) panes of 0.125" annealed with .090" PVB interlayer by Solutia. All lites are sandwiched glazed into the panels.

TABLE OF CONTENTS

SHEET #	DESCRIPTION
1	TYPICAL ELEVATIONS
2	VERTICAL CROSS SECTION & BILL OF MATERIAL
3	HORIZONTAL CROSS SECTIONS
4	ANCHORING LOCATIONS
5	MISCELLANEOUS DETAILS
6	UNIT COMPONENTS

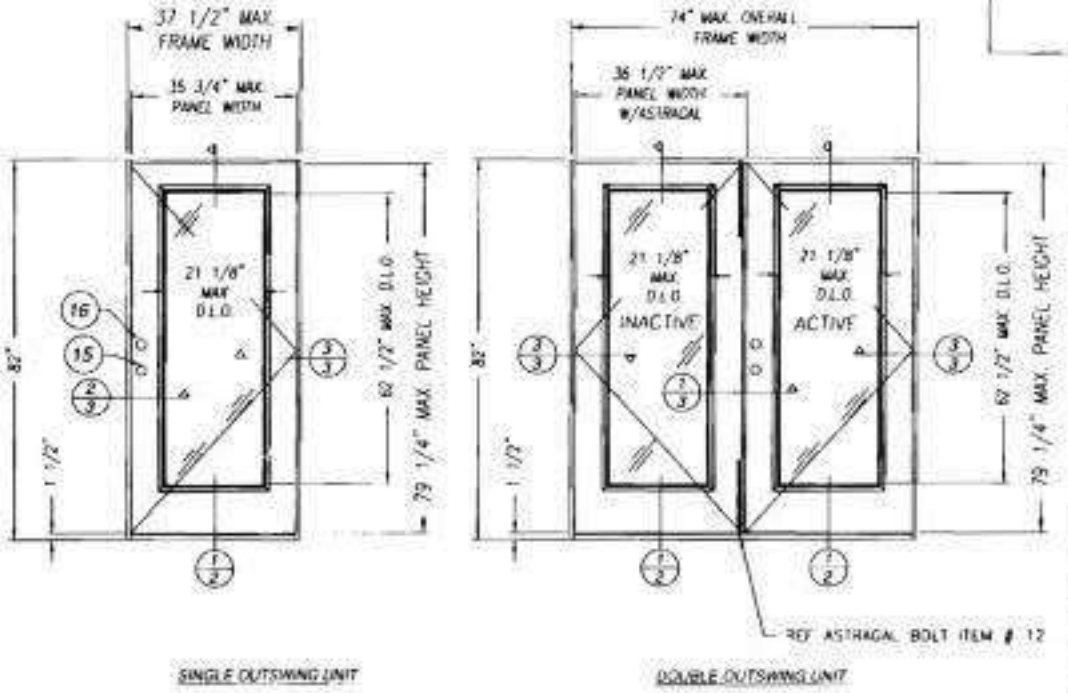

SINGLE OUTSWING UNIT

DOUBLE OUTSWING UNIT

ALL DOOR MODELS ARE VIEWED FROM THE INTERIOR SIDE

TABLE I	DESIGN PRESSURE RATING	
		APPROVED FOR USE WHERE PROTECTION FOR WATER INFILTRATION IS REQUIRED
POSITIVE		+80.0 PSF
NEGATIVE		-80.0 PSF

Approved as complying with the Florida Building Code
Date 05/25/06
NOAA 05-[illegible]
Miami Dade Product Control

Jane Dobrowski
4-18-06

JELD-WEN, INC.
31725 HIGHWAY 97 N.
CHILOQUIN, OR 97624
PH. 1-800-535-3936

PRODUCT: IMPACT GLAZED STEEL DOOR OUTSWING 6'-8" LIP LITE

PART OR ASSEMBLY: TYPICAL ELEVATIONS

NO	DATE	REVISIONS	BY
B	04-06-06	GENERAL REVISIONS	CREW
A	12-17-04	GENERAL REVISIONS	

DATE: 9-06-05
SCALE: NTS
DWG. BY: JPM
CHK. BY:
DRAWING NO.: JW0509 01 01
SHEET 1 OF 6

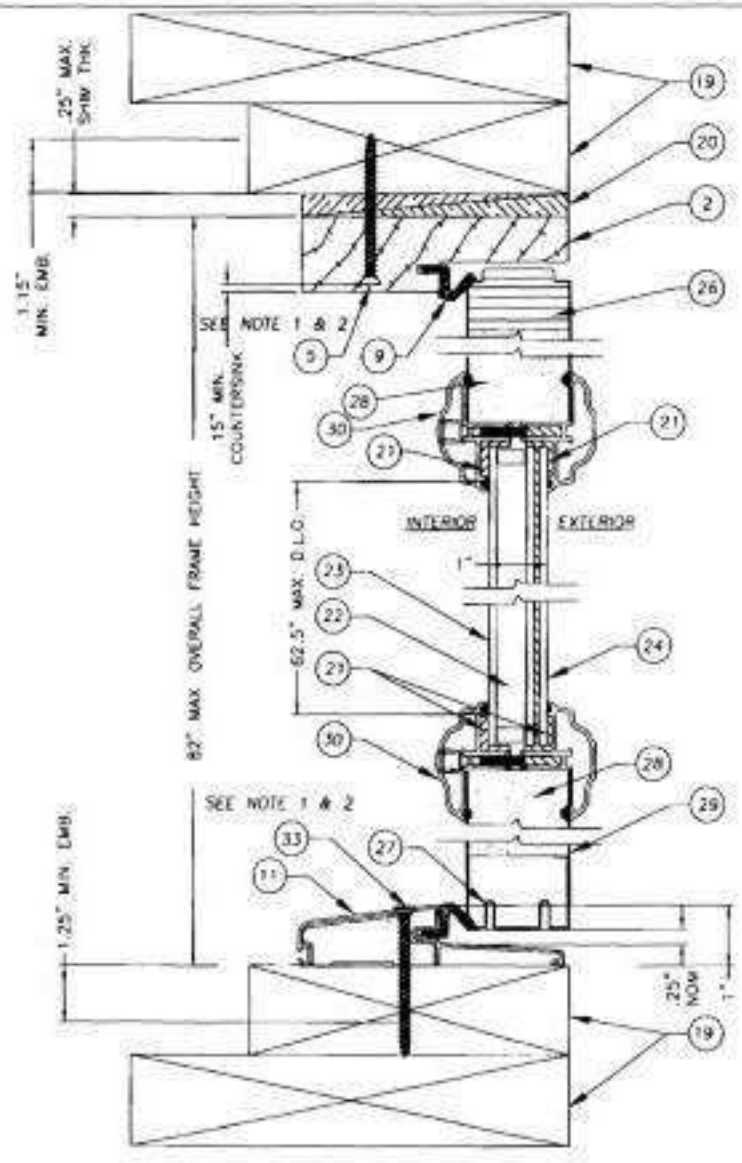

1/2 VERTICAL CROSS-SECTION (ENDURA # F0B4566 SILL)

Item	DESCRIPTION	Material
1	SIDE JAMB (1 1/4"x 4 9/16" FINGERJOINTED PINE)	PINE
2	HEAD JAMB (1 1/4"x 4 9/16" FINGERJOINTED PINE)	PINE
3	4" x 4" BUTT HINGE 12GA. (.089" MIN)	STEEL
4	#9 x 5/8" PHILLIPS FLATHEAD WOOD SCREW	STEEL
5	#8 x 2 1/2" PHILLIPS FLATHEAD WOOD SCREW	STEEL
6	#10 X 1 1/2" PHILLIPS FLATHEAD WOOD SCREW	STEEL
7	#8 x 3" PHILLIPS FLATHEAD WOOD SCREW	STEEL
8	#8X1" PHILLIPS PAN HEAD WOOD SCREW	STEEL
9	COMPRESSION WEATHERSTRIP (Q-LON QDS-650)	
11	OUTSWING BUMP THRESHOLD (ENDURA)	ALUMINUM
12	ASTRAGAL THROW BOLT, STEEL ROD, 5/16 x 18"	STEEL
13	ASTRAGAL BOLT STRIKE PLATE LOCATED ON HEAD JAMB	STEEL
14	16 Ga. 7/16" CROWN x 2" LONG STAPLES	STEEL
15	KWIKSET TITAN SERIES LOCK SERIES 400	
16	KWIKSET TITAN SERIES DEADBOLT SERIES 780	
17	ENDURA ULTIMATE HURRICANE ASTRAGAL	ALUMINUM
18	ASTRAGAL BOLT STRIKE PLATE ON BOTTOM SILL	STEEL
19	2x WOOD BUCK	WOOD
20	SHIMS FOR 1/4" MAX THICKNESS	WOOD
21	DOW 995 SILICONE SEALANT	SILICONE
22	1" IMPACT IG ASSEMBLY NOA #03-0428-02	GLASS
23	1/8" TEMPERED GLASS	GLASS
24	3/8" LAMINATED ANNEALED GLASS	GLASS
25	LOCK BLOCK (WOOD X 12" LG)	WOOD
26	TOP RAIL (FINGERJOINTED PINE)	PINE
27	BOTTOM RAIL (25GA MIN GALVANIZED STEEL)	STEEL
28	EXPANDED POLYSTYRENE (1.0 TO 1.25lbs DENSITY BY JELD-WEN)	FOAM
29	STEEL DOOR PANEL SKIN MATERIAL (24GA GALVANIZED) A-525 COMMERCIAL QUALITY 0.021" MIN. THICK)	STEEL GALVANIZED
30	ODL LITE FRAME (ALUM 6063 T5)	ALUMINUM
31	HINGE SIDE STILE (FINGER JOINTED LVL)	PINE
32	LATCH SIDE STILE (FINGER JOINTED LVL)	LVL
33	#8 x 2" PHILLIPS FLATHEAD WOOD SCREW	STEEL

NOTES:
1. FOR ANCHOR SPACING SEE SHEET 4 OF 6
2. 2x BUCK TO SUBSTRATE FASTENING MAY UTILIZE OPTIONAL 3/16" ELCO TAPCON (NOA #02-0503.07)

James Dolinski
4-18-06

JELD-WEN, INC
31725 HIGHWAY 97 N.
CHILOQUIN, OR. 97624
PH. 1-800-535-3936

PRODUCT: IMPACT GLAZED STEEL DOOR OUTSWING 6'-8" LIP LITE

PART OR ASSEMBLY: VERTICAL CROSS SECTION BILL OF MATERIALS

NO	DATE	REVISIONS	BY
B	04-08-06	GENERAL REVISIONS	DREW
A	12-16-04	GENERAL REVISIONS	

DATE 9-06-05
SCALE NTS
DWG. BY JPR
CHK. BY
DRAWING NO. JW0509-03-02
SHEET 2 OF 6

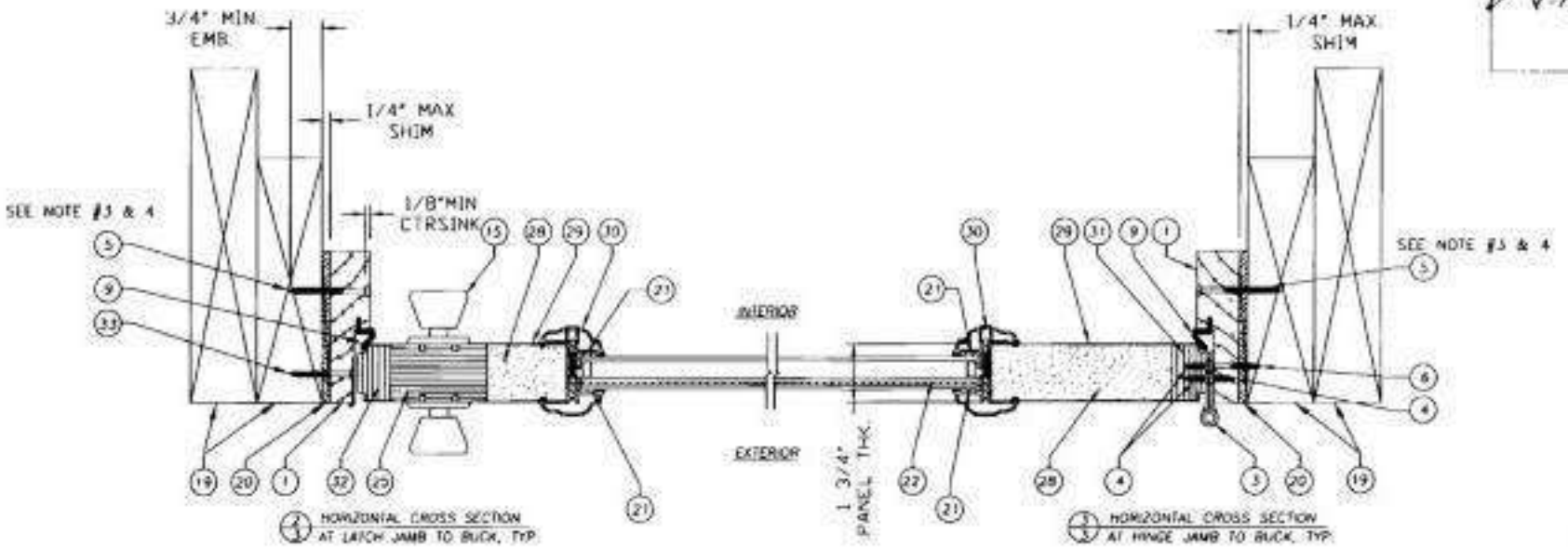

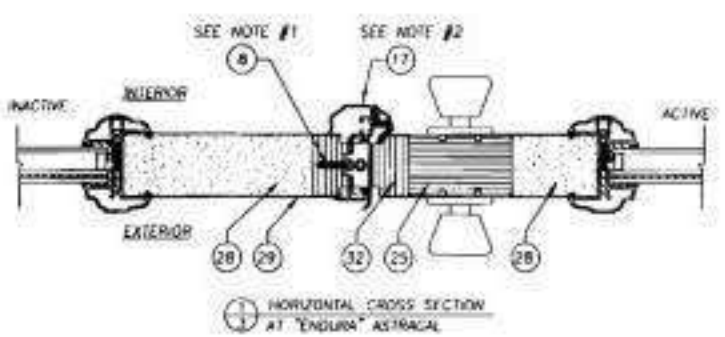

NOTES:
1. ASTAGAL FASTENER SPACING DETAIL F, PAGE #5. (TOTAL OF 14 SCREWS)
2. LATCH AND DEADBOLT STRIKE PLATES MOUNT TO ASTRAGAL WITH ADJUSTABLE NUT PLATES. BOTH PLATES REQUIRE #8 X 3" PHILLIPS FLATE HEAD WOOD SCREWS.
3. FOR ANCHOR SPACING SEE SHEET 4 OF 6
4. 2x BUCK TO SUBSTRATE FASTENING MAY UTILIZE OPTIONAL 3/16" ELCO TAPCON (NOA #02-0503.07)

Jane Dotrowski
4-18-06

JELD-WEN, INC.
31725 HIGHWAY 97 N
CHILOQUIN, OR 97624
PH. 1-800-535-3936

PRODUCT: IMPACT GLAZED STEEL DOOR OUTSWING 6'-8" LIP LITE

PART OR ASSEMBLY: HORIZONTAL CROSS SECTIONS

NO	DATE	REVISIONS	DREW
B	04-08-06	GENERAL REVISIONS	

Approved as complying with the Florida Building Code
Date 05.12.06
NOAA 05-1245.01
Miami Dade Testing Center
Designed By: [signature]

DATE 9-06-05
SCALE NTS
DWG BY JPR
CHK BY
DRAWING NO. JW0509 03-03
SHEET 2 OF 6

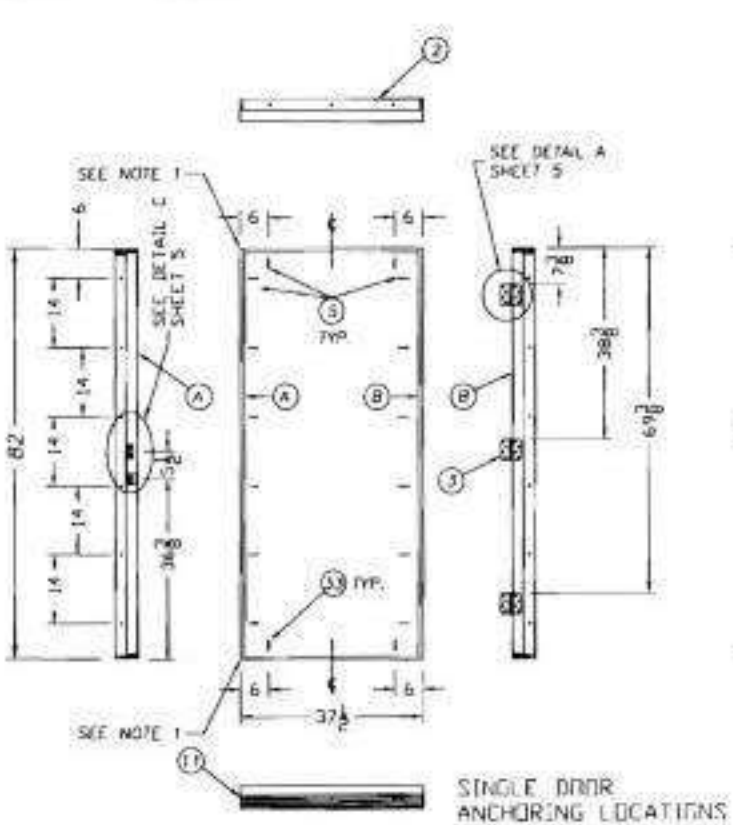

SINGLE DOOR
ANCHORING LOCATIONS

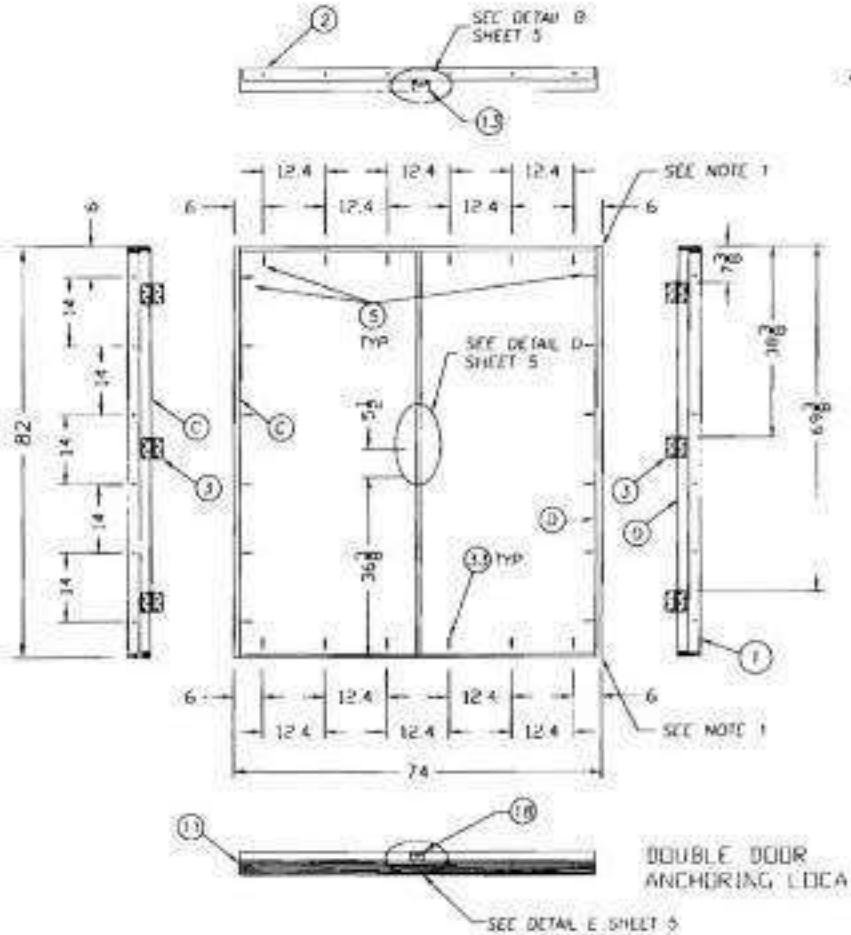

DOUBLE DOOR
ANCHORING LOCATIONS

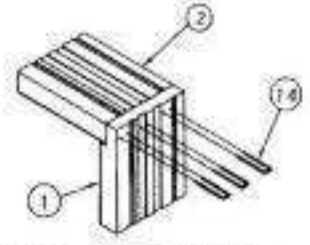

TYPICAL JOINING OF SIDE
JAMB TO HEAD JAMB OR SILL

NOTES:

1. HEAD JAMBS & SILLS ARE JOINED TO THE SIDE JAMBS USING (3) 16 Ga. 7/16" CROWN x 2" LONG STAPLES.

Approved as complying with the Florida Building Code
Date 05/25/06
NOAA 05-105-01
Miami-Dade Product Control

JELD-WEN, INC.
31725 HIGHWAY 97 N.
CHILOQUIN, OR 97624
PH. 1-800-535-3935

PRODUCT: IMPACT GLAZED STEEL DOOR OUTSWING 6' 8" LIP LITE

PART OR ASSEMBLY: ANCHORING LOCATIONS

NO	DATE	REVISIONS	BY
B	04-08-05	GENERAL REVISIONS	DREW
A	12-16-04	H.M.VA. REVISIONS	

DATE 9-06-05
SCALE NTS
DWG BY JPM
CHK BY
DRAWING NO JW0509-03-04
SHEET 4 OF 6

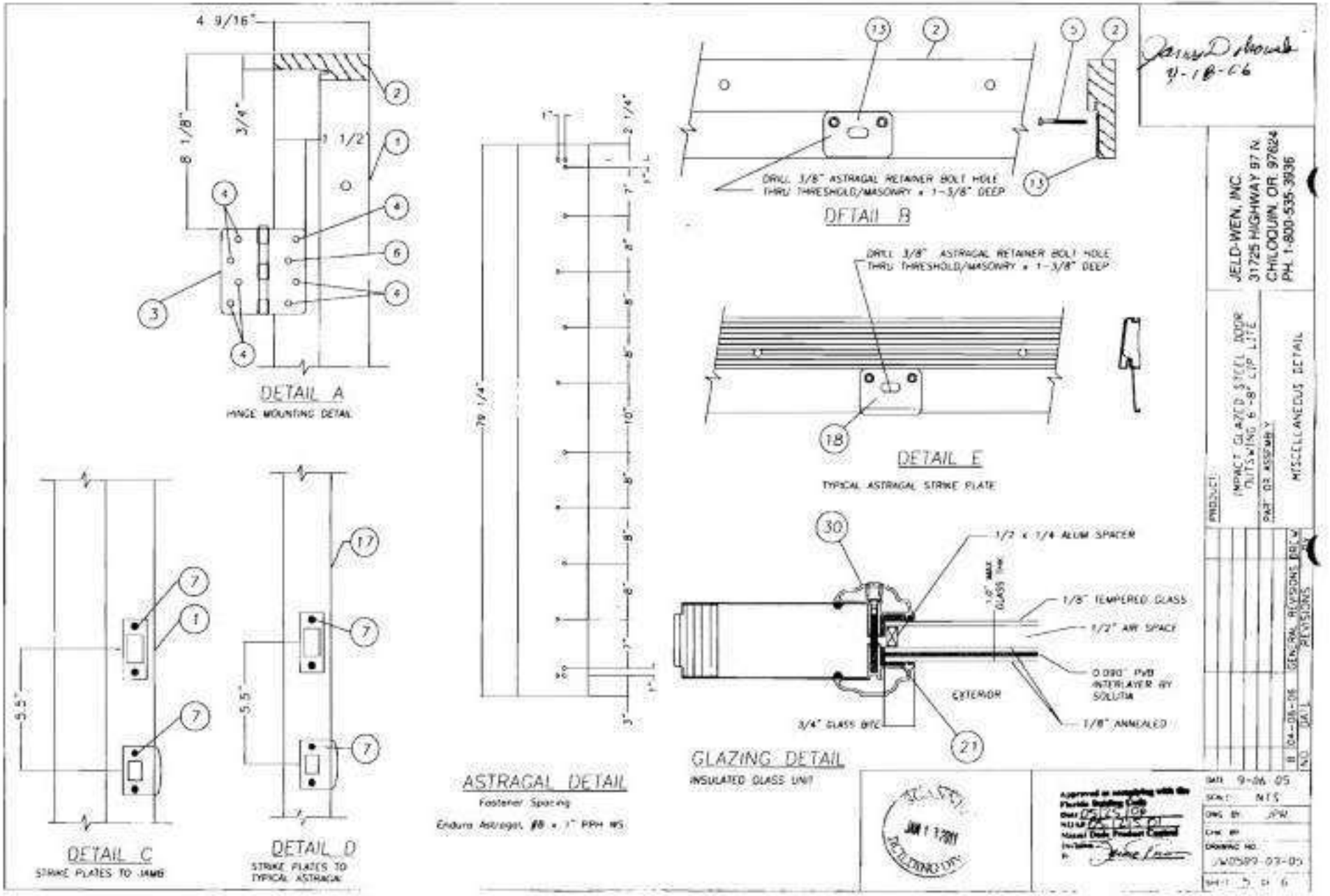

4 9/16"
8 1/8"
3/4"
1 1/2"
DETAIL A
HINGE MOUNTING DETAIL
79 1/4"
2 1/4"
ASTRAGAL DETAIL
Fastener Spacing
Endura Astragal, #8 x 1" PPH WS
DRILL 3/8" ASTRAGAL RETAINER BOLT HOLE THRU THRESHOLD/MASONRY x 1-3/8" DEEP
DETAIL B
DRILL 3/8" ASTRAGAL RETAINER BOLT HOLE THRU THRESHOLD/MASONRY x 1-3/8" DEEP
DETAIL E
TYPICAL ASTRAGAL STRIKE PLATE
1/2 x 1/4 ALUM SPACER
1/8" TEMPERED GLASS
1/2" AIR SPACE
0.090" PVB INTERLAYER BY SOLUTIA
1/8" ANNEALED
EXTERIOR
3/4" GLASS BITE
GLAZING DETAIL
INSULATED GLASS UNIT
5.5"
DETAIL C
STRIKE PLATES TO JAMB
DETAIL D
STRIKE PLATES TO TYPICAL ASTRAGAL
JELD-WEN, INC.
31725 HIGHWAY 97 N.
CHILOQUIN, OR. 97624
PH. 1-800-535-3936
PRODUCT:
IMPACT GLAZED STEEL DOOR OUTSWING 6'-8" LTP LITE
PART OR ASSEMBLY
MISCELLANEOUS DETAIL
GENERAL REVISIONS DRAW
REVISIONS
NO. DATE
B 04-06-06
DATE 9-06-05
SCALE NTS
DWG BY JPW
CHK BY
DRAWING NO. JW0589-03-05
SHEET 5 OF 6
JAN 1 7 2011
BUILDING DIV

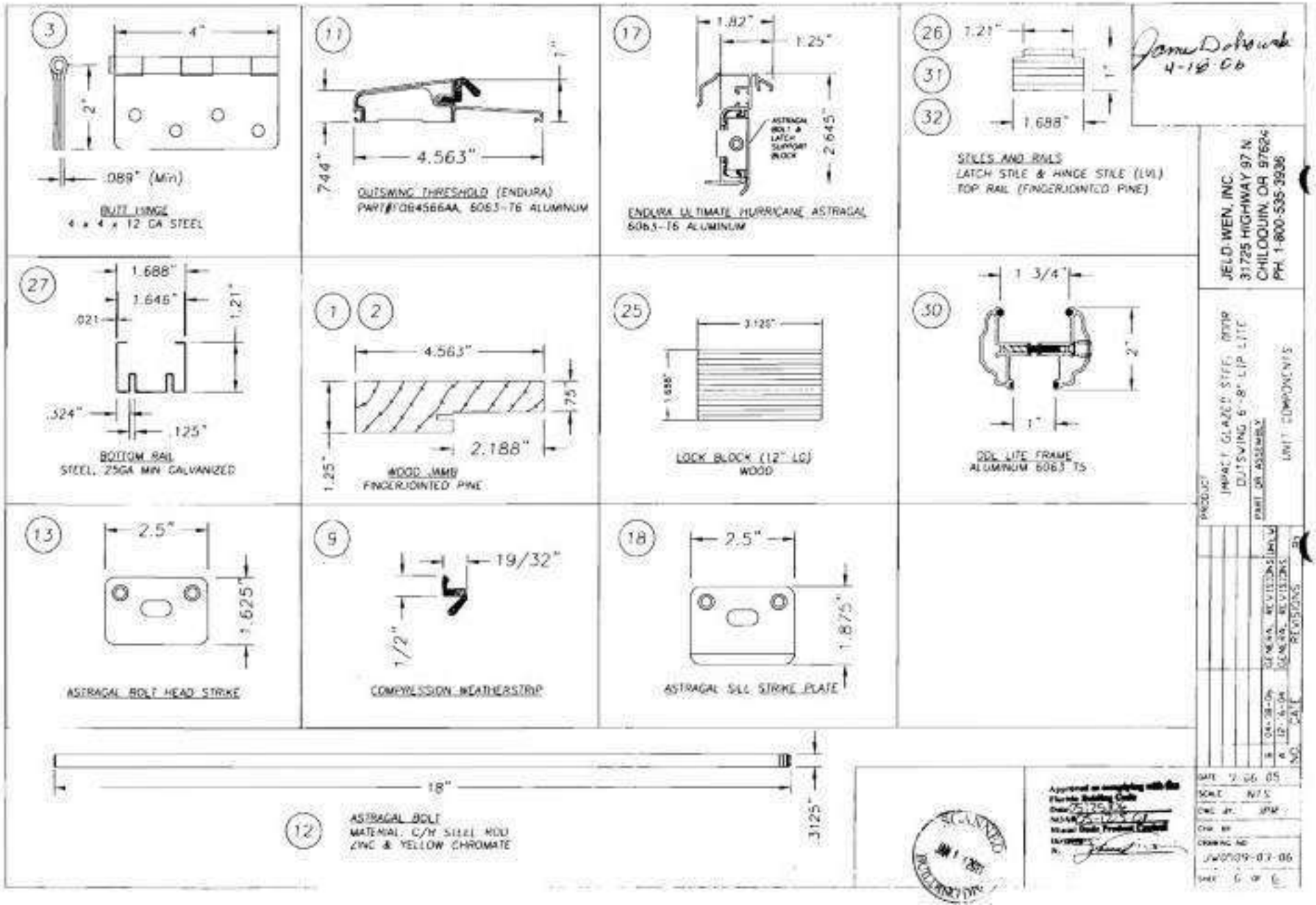

3
4"
2"
.089" (Min)
BUTT HINGE
4 x 4 x 12 GA STEEL
11
1"
4.563"
.744"
OUTSWING THRESHOLD (ENDURA)
PART#F084566AA, 6063-T6 ALUMINUM
17
1.82"
1.25"
ASTRAGAL BOLT & LATCH SUPPORT BLOCK
2.645"
ENDURA ULTIMATE HURRICANE ASTRAGAL
6063-T6 ALUMINUM
26
31
32
1.21"
1"
1.688"
STILES AND RAILS
LATCH STILE & HINGE STILE (LVL)
TOP RAIL (FINGERJOINTED PINE)
27
1.688"
1.646"
.021
1.21"
.324"
.125"
BOTTOM RAIL
STEEL, 25GA MIN GALVANIZED
1
2
4.563"
.75"
2.188"
1.25"
WOOD JAMB
FINGERJOINTED PINE
25
3.125"
1.688"
LOCK BLOCK (12" LG)
WOOD
30
1 3/4"
2"
1"
DDL LITE FRAME
ALUMINUM 6063 T5
13
2.5"
1.625"
ASTRAGAL BOLT HEAD STRIKE
9
19/32"
1/2"
COMPRESSION WEATHERSTRIP
18
2.5"
1.875"
ASTRAGAL SILL STRIKE PLATE
18"
3125"
12
ASTRAGAL BOLT
MATERIAL: C/R STEEL ROD
ZINC & YELLOW CHROMATE
JELD-WEN, INC.
31725 HIGHWAY 97 N.
CHILOQUIN, OR 97624
PH. 1-800-535-3936
PRODUCT
IMPACT GLAZED STEEL DOOR
OUTSWING 6'-8" LIP LITE
PART OR ASSEMBLY
UNIT COMPONENTS
NO. DATE REVISIONS
DATE 2-06-05
SCALE N/TS
CHK. BY JPM
DRAWING NO. JW0509-03-06
SHEET 6 OF 6

MIAMI-DADE COUNTY

MIAMI-DADE COUNTY, FLORIDA
METRO-DADE FLAGLER BUILDING
140 WEST FLAGLER STREET, SUITE 1603
MIAMI, FLORIDA 33130-1563
(305) 375-2901 FAX (305) 375-2908
www.buildingcodeonline.com

BUILDING CODE COMPLIANCE OFFICE (BCCO)
PRODUCT CONTROL DIVISION

APPROVED
MAR 25 2009

NOTICE OF ACCEPTANCE (NOA)

Jeld-Wen
355 Carter Court
Venice, FL 34285

SCOPE:

This NOA is being issued under the applicable rules and regulations governing the use of construction materials. The documentation submitted has been reviewed by Miami-Dade County Product Control Division and accepted by the Board of Rules and Appeals (BORA) to be used in Miami Dade County and other areas where allowed by the Authority Having Jurisdiction (AHJ).

This NOA shall not be valid after the expiration date stated below. The Miami-Dade County Product Control Division (In Miami Dade County) and/or the AHJ (in areas other than Miami Dade County) reserve the right to have this product or material tested for quality assurance purposes. If this product or material fails to perform in the accepted manner, the manufacturer will incur the expense of such testing and the AHJ may immediately revoke, modify, or suspend the use of such product or material within their jurisdiction. BORA reserves the right to revoke this acceptance, if it is determined by Miami-Dade County Product Control Division that this product or material fails to meet the requirements of the applicable building code.

This product is approved as described herein, and has been designed to comply with the Florida Building Code, including the High Velocity Hurricane Zone.

DESCRIPTION: Series "6500 Premium Atlantic" Aluminum Horizontal Slider Window

APPROVAL DOCUMENT: Drawing No. **JELD0021**, titled "6500 HS Window Large Missile Impact Elevations and General Notes", sheets 1 through 7 of 7, prepared by PTC, LLC, dated 04/24/06 with revision "1" on 04/12/06, signed and sealed by L. Roberto Lomas, P.E., bearing the Miami-Dade County Product Control Approval stamp with the Notice of Acceptance number and approval date by the Miami-Dade County Product Control Division.

MISSILE IMPACT RATING: Large and Small Missile Impact

LABELING: Each unit shall bear a permanent label with the manufacturer's name or logo, city, state and following statement: "Miami-Dade County Product Control Approved", unless otherwise noted herein.

RENEWAL of this NOA shall be considered after a renewal application has been filed and there has been no change in the applicable building code negatively affecting the performance of this product.

TERMINATION of this NOA will occur after the expiration date or if there has been a revision or change in the materials, use, and/or manufacture of the product or process. Misuse of this NOA as an endorsement of any product, for sales, advertising or any other purposes shall automatically terminate this NOA. Failure to comply with any section of this NOA shall be cause for termination and removal of NOA.

ADVERTISEMENT: The NOA number preceded by the words Miami-Dade County, Florida, and followed by the expiration date may be displayed in advertising literature. If any portion of the NOA is displayed, then it shall be done in its entirety.

INSPECTION: A copy of this entire NOA shall be provided to the user by the manufacturer or its distributors and shall be available for inspection at the job site at the request of the Building Official.

This NOA consists of this page 1 and evidence page E-1, as well as approval document mentioned above.

The submitted documentation was reviewed by **Jaime D. Gascon, P.E.**

Approved 11/22/09

J. Gascon
8/7/06

ROBERT G. ISHMAN P.A.
ARCHITECT
2117 HOLLYWOOD BLVD.
HOLLYWOOD, FLORIDA 33020

NOA No 06-0504.01
Expiration Date: August 10, 2011
Approval Date: August 10, 2006
Page 1

Jeld-Wen

NOTICE OF ACCEPTANCE: EVIDENCE SUBMITTED

A. DRAWINGS

1. Manufacturer's die drawings and sections.
2. Drawing No **JELD0021**, titled "6500 HS Window Large Missile Impact Elevations and General Notes" Sheets 1 through 7 of 7, prepared by PTC, LLC, dated 04/24/06 with revision **"1"** , on 04/12/06, signed and sealed by L. Roberto Lomas, P.E.

B. TESTS

1. Test reports on 1) Test reports on 1) Air Infiltration Test, per FBC, TAS 202-94
   2) Uniform Static Air Pressure Test, Loading per FBC, TAS 202-94
   3) Water Resistance Test, per FBC, TAS 202-94
   4) Large Missile Impact Test per FBC, TAS 201-94
   5) Cyclic Wind Pressure Loading per FBC, TAS 203-94
   6) Forced Entry Test per FBC TAS 202-94 and ASTM F588-97

   along with marked-up drawings and installation diagram of an aluminum horizontal sliding window, prepared by National Certified Testing Laboratories, Test Report No. **NCTL-210-3208-1**, dated 10/31/05, signed and sealed by Gerard J. Ferrara, P.E.

C. CALCULATIONS

1. Anchor Calculations and structural analysis, complying with FBC-2004, prepared by PTC, LLC, dated 03/29/06, signed and sealed by Luis R. Lomas, P.E.
   Complies with ASTM E 1300-02

D. QUALITY ASSURANCE

1. Miami Dade Building Code Compliance Office (BCCO).

E. MATERIAL CERTIFICATIONS

1. Notice of Acceptance No. **02-0828.15**, issued to E.I. DuPont DeNemours for their "Sentry Glass ® Plus", approved on 01/17/02 and expiring on 01/14/07.
2. Notice of Acceptance No. 01-1204.01, issued to Spectus Systems-A Mikron Company "White PVC Rigid", expiring on 12/26/06.

F. STATEMENTS

1. Statement letters of Compliance and "no financial interest", both dated 04/24/06, signed and sealed by Luis R. Lomas, P.E.

G. OTHER

1. Letter from the consultant, dated 05/31/06, stating that the product is in compliance with the Florida Building Code (FBC).

Jaime D. Gascon, P.E.
Chief, Product Control Division
NOA No 06-0504.01
Expiration Date: August 10, 2011
Approval Date: August 10, 2006

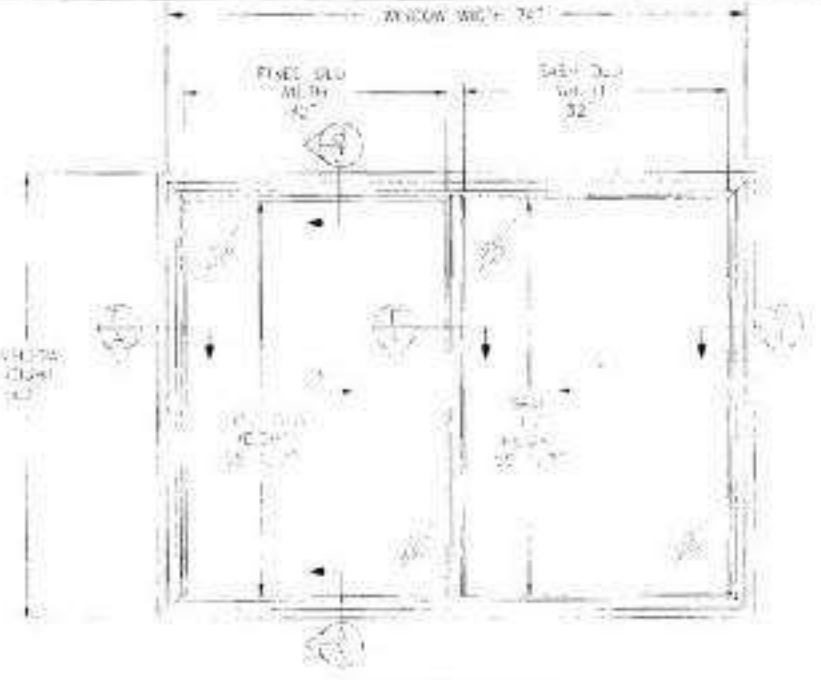

SINGLE POCKET SLIDER RIFFING

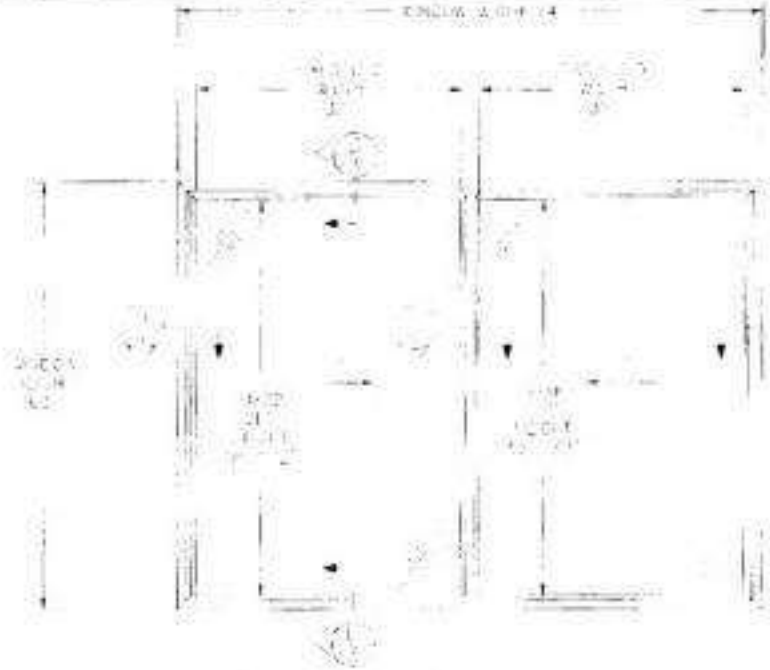

SINGLE POCKET SLIDER FLOWER

TABLE OF CONTENTS

SHEET	SHEET DESCRIPTION
1	ELEVATION & DEPTH NOTES
2	ANCHORING DETAILS
3	VERTICAL SECTIONS
A & B	HORIZONTAL SECTIONS
[illegible]	[illegible] & GLAZING DETAILS
[illegible]	SYNTHETIC COMPONENTS

GENERAL NOTES:

1) THE PRODUCT OF THIS HEREIN IS DESIGNED AND MANUFACTURED IN COMPLEX WITH THE 2004 FLORIDA BUILDING CODE.
2) WOOD BLOCK OR STUD FRAMING TO BE DESIGNED AND ANCHORED TO PROPERLY TRANSFER ALL LOADS TO STRUCTURE. BLOCK OR FRAMING IS RESPONSIBILITY OF THE ARCHITECT OR BUILDING.
3) PRODUCTS ARE APPROVED FOR USE WHERE LARGE MISSILE IMPACT RESISTANCE IS REQUIRED. IMPACT PROTECTION SYSTEM IS NOT REQUIRED.
4) SEE DESIGN PRESSURE RATINGS SHEET 1.

Approved as complying with the Florida Building Code
Date 06/10/06
NOAA
Miami Dade Product Control
Division
By

PTC

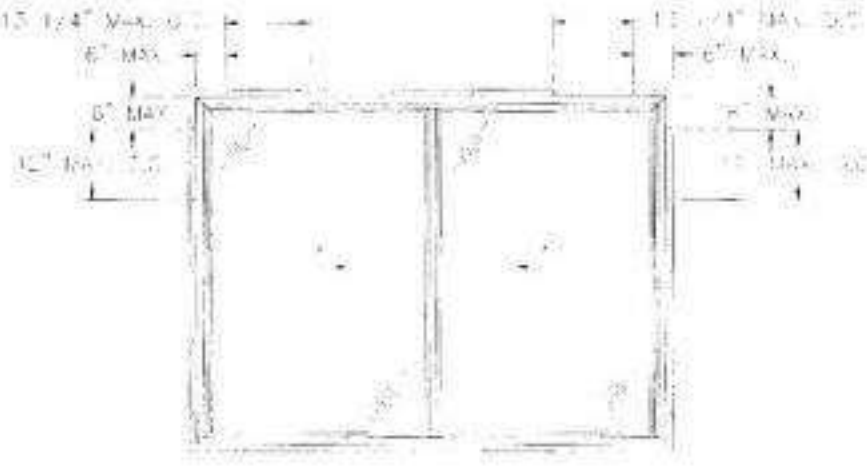

SINGLE HOOKER SHEET
[illegible] FRAMING INSTALLATION [illegible]

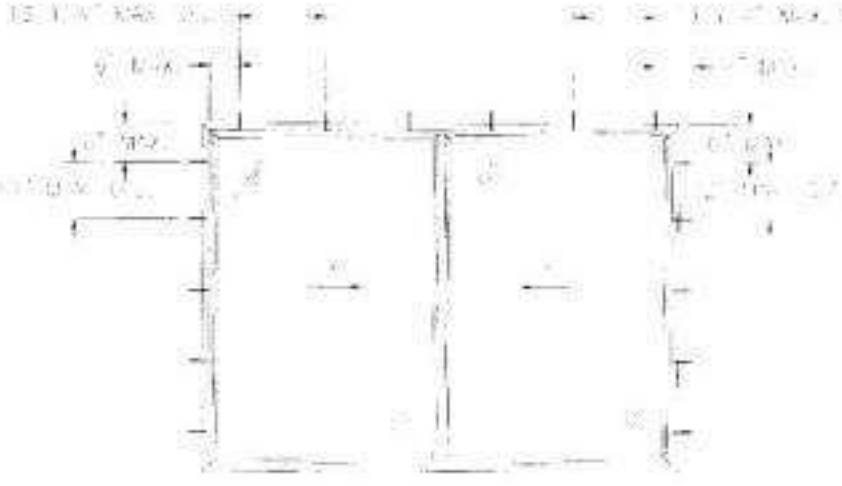

[illegible]

NOTES:

1. [illegible] EACH SET OF [illegible] ANCHORS. MINIMUM ALLOWABLE [illegible] TO BE [illegible] SPACE OF 1/16" [illegible]
2. FOR WOOD FRAMING INSTALLATION USE [illegible] SUPPLIED [illegible] SUFFICIENT [illegible] INTO FRAMING.
3. FOR MASONRY INSTALLATION USE [illegible] CONCRETE [illegible] SUFFICIENT [illegible] MINIMUM OF [illegible] EMBEDMENT INTO MASONRY AND [illegible] MINIMUM [illegible]
4. [illegible] MAXIMUM [illegible] ANCHORS [illegible] FROM EACH END [illegible] MAXIMUM THEREAFTER.
5. [illegible] DESIGNATING X AND O STAND FOR THE FOLLOWING:
   X = OPERATING PANEL
   O = FIXED PANEL

Approved in compliance with the Florida Building Code
Date 08/10/06
NOAA [illegible]
Miami Dade Product Control
Division
By [illegible]

SYM	REVISION	DATE	BY

[illegible]

PTC

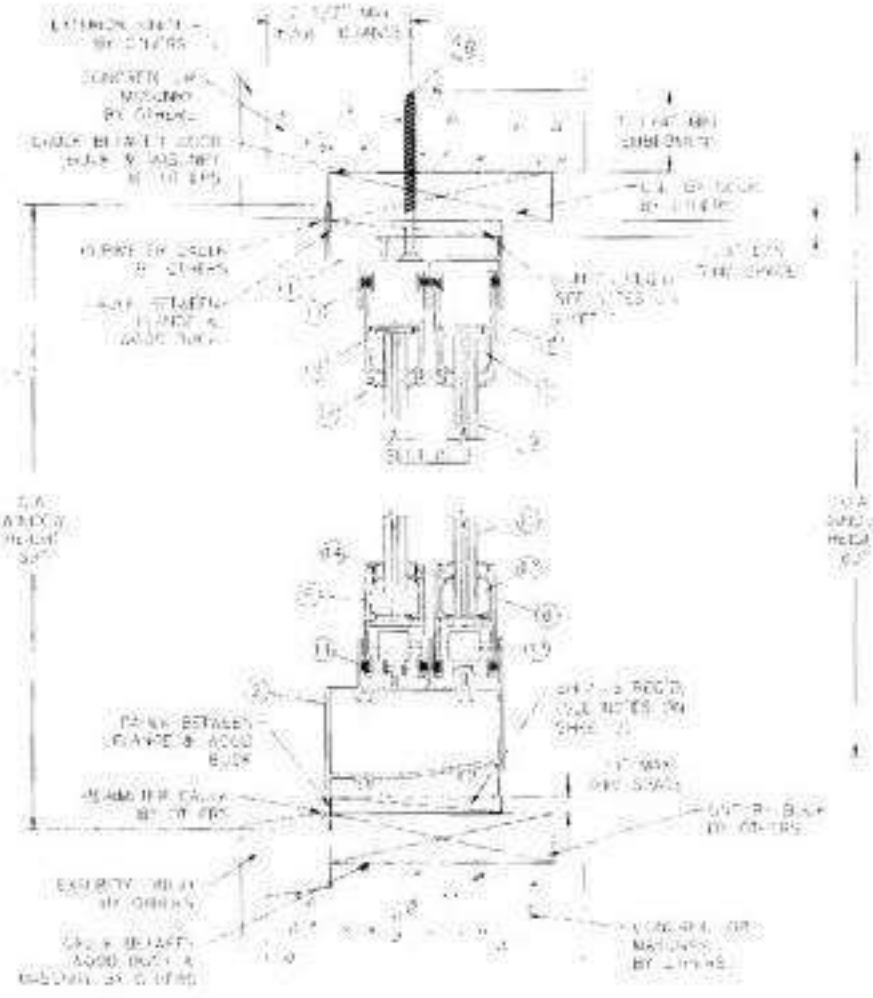

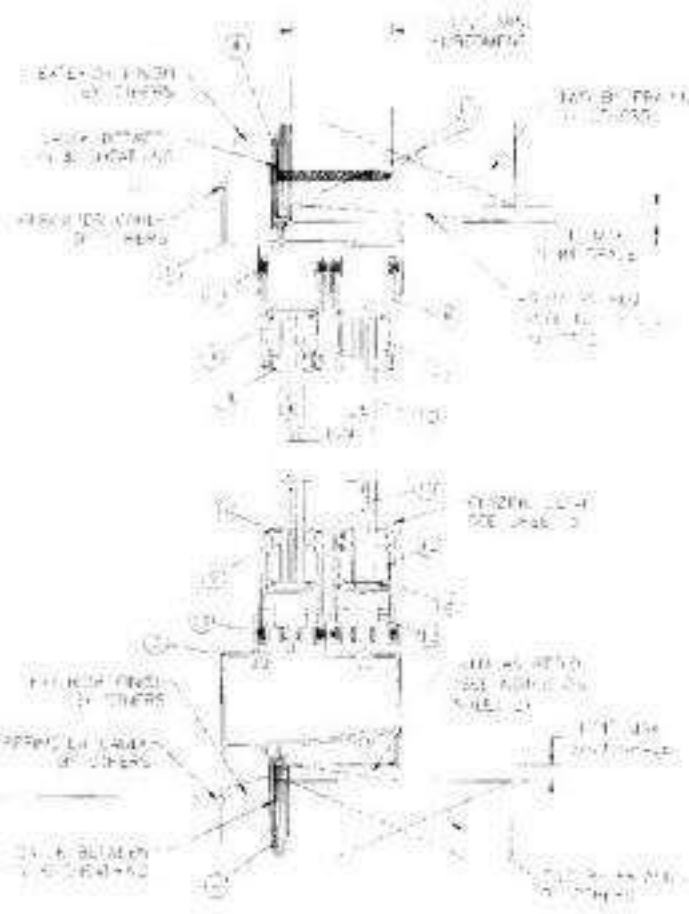







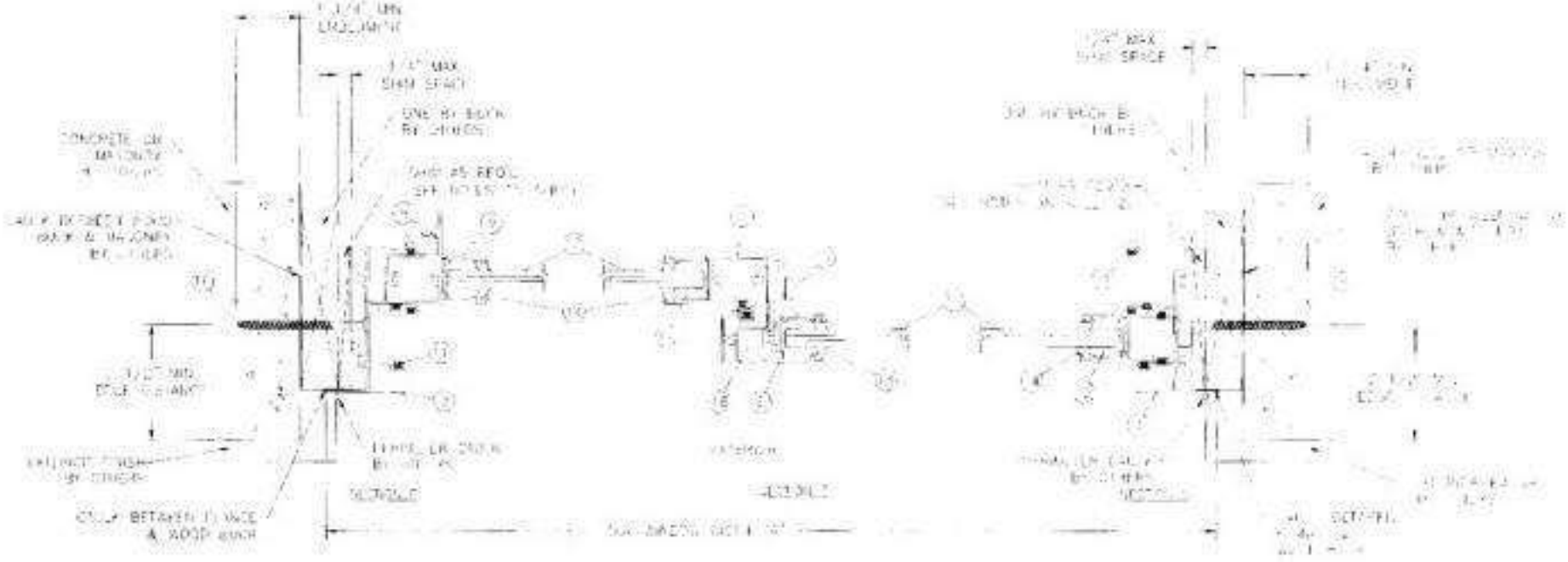

Approved as complying with the Florida Building Code
Date 08/10/06
NOAA
Mined Rock Product Control
Division
By

PTC

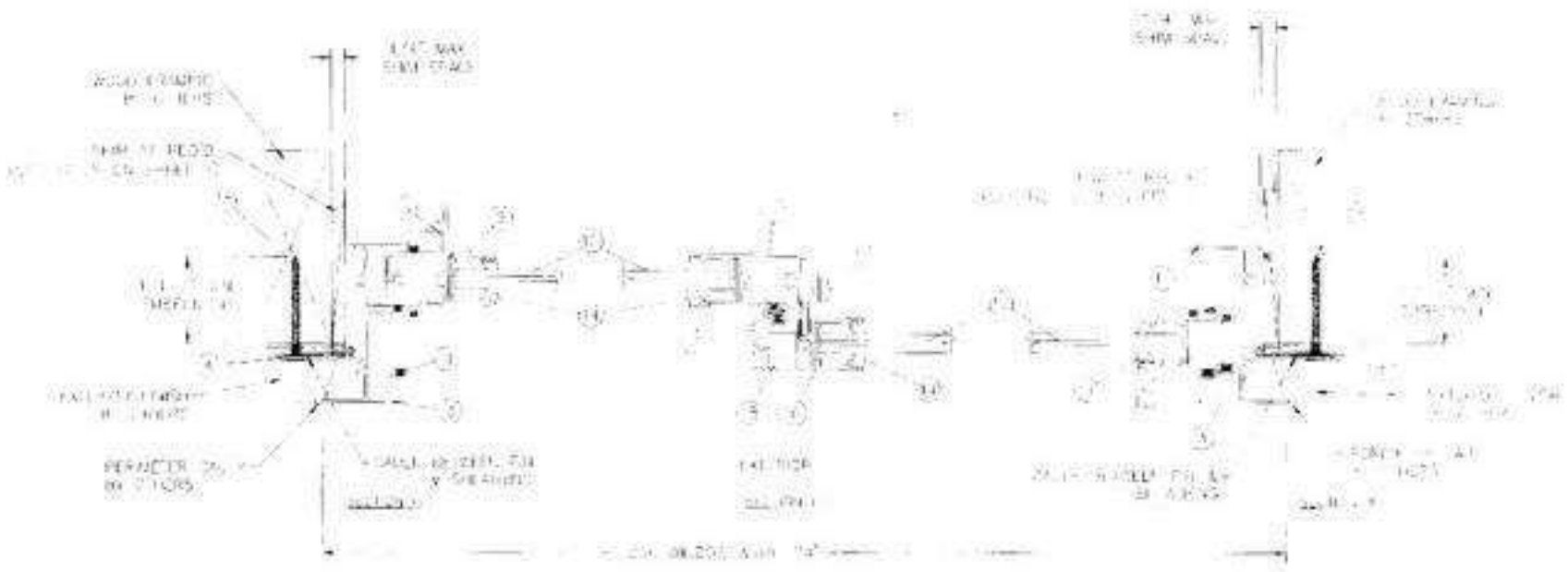

Approved as complying with the Florida Building Code
Date 08/10/05
NOAA Dis-Approval
Miami-Dade Product Control
Division
By

PTC

BILL OF MATERIAL

NO.	PART NO.	DESCRIPTION	ALLOY	SUPPLIER
1	11343	FRAME HEAD	6063-T6	INDALEX
2	11395	FRAME SILL	6063-T6	INDALEX
3	11395	FRAME JAMB	6063-T6	INDALEX
4	45222	APPLIED FIN	6063-T6	INDALEX
5	60V56	TOP SASH VENT	6063-T6	INDALEX
6	60V71	TOP SASH CLOCK IMPACT RAIL	6063-T6	INDALEX
7	60V60	BTM SASH CLOCK IMPACT RAIL	6063-T6	INDALEX
8	60V55	SASH JAMB SILL IMPACT RAIL	6063-T6	INDALEX
9	[illegible]	GLAZING BEAD		
10		0.210" DIA. LAMINATED GLASS, 0.125" ANNEALED EXTERIOR, 0.030" SENTRY [illegible] ANNEALED [illegible]		
11		0.187" [illegible]		
12		[illegible]		
13	[illegible]	[illegible] ASSEMBLY		
14		[illegible]		
15		#12 [illegible]		
16		1.4" DIA. [illegible] ANCHOR		
17		LOCK ASSEMBLY		
18		REINFORCEMENT [illegible] .625"	STEEL	

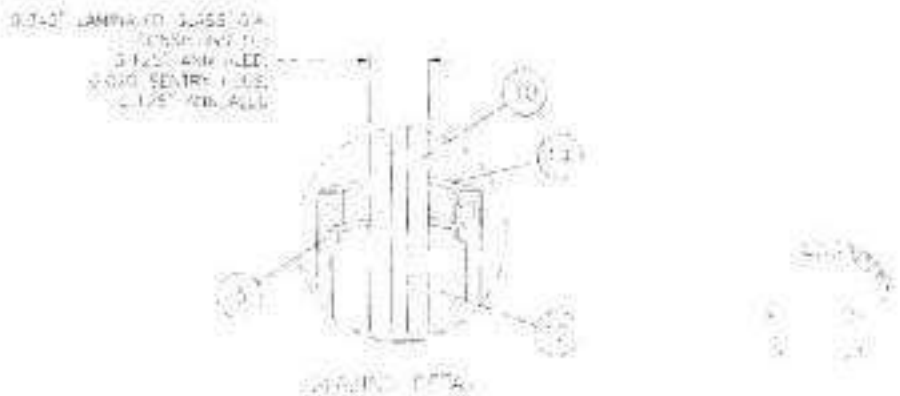

SPRING DETAIL

Approved as complying with the Florida Building Code
Date [illegible]
Notice [illegible]
Miami-Dade Product Control
Division
By [illegible]

Roberto [illegible]
[illegible]
[illegible]
6/26/06

PTC

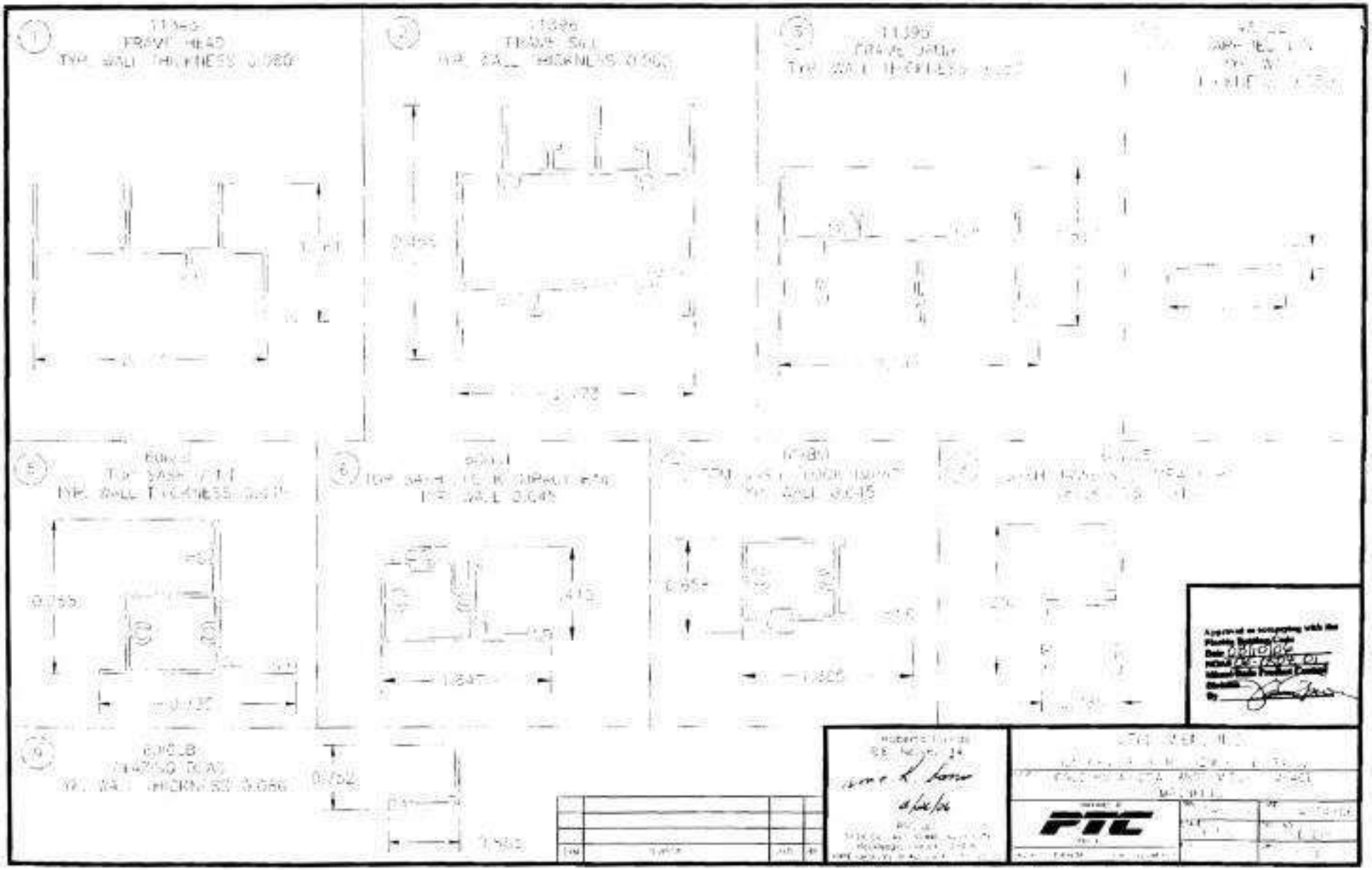

U.S. DEPARTMENT OF HOMELAND SECURITY
Federal Emergency Management Agency
National Flood Insurance Program

ELEVATION CERTIFICATE

OMB No. 1660-0008
Expires February 28, 2009

Important: Read the instructions on pages 1-8.

SECTION A - PROPERTY INFORMATION

For Insurance Company Use:

A1. Building Owner's Name MATHIAS KONDOLF

Policy Number

A2. Building Street Address (including Apt., Unit, Suite, and/or Bldg. No.) or P.O. Route and Box No.
1404 JACKSON ST

Company NAIC Number

City HOLLYWOOD State FL ZIP Code 33020

A3. Property Description (Lot and Block Numbers, Tax Parcel Number, Legal Description, etc.)
LOT 17 AND EAST 1/2 OF LOT 18, BLOCK 89 OF HOLLYWOOD, PLAT BOOK 1, PG 21, B.C.R., APN #: 51-42-15-02-6660

A4. Building Use (e.g., Residential, Non-Residential, Addition, Accessory, etc.) RESIDENTIAL

A5. Latitude/Longitude: Lat. 26°00'32.4" Long. 80°08'06.6" Horizontal Datum: ☐ NAD 1927 ☒ NAD 1983

A6. Attach at least 2 photographs of the building if the Certificate is being used to obtain flood insurance.

A7. Building Diagram Number 1

A8. For a building with a crawl space or enclosure(s), provide
- a) Square footage of crawl space or enclosure(s) 0 sq ft
- b) No. of permanent flood openings in the crawl space or enclosure(s) walls within 1.0 foot above adjacent grade 0
- c) Total net area of flood openings in A8.b 0 sq in

A9. For a building with an attached garage, provide:
- a) Square footage of attached garage 0 sq ft
- b) No. of permanent flood openings in the attached garage walls within 1.0 foot above adjacent grade 0
- c) Total net area of flood openings in A9.b 0 sq in

SECTION B - FLOOD INSURANCE RATE MAP (FIRM) INFORMATION

B1. NFIP Community Name & Community Number	B2. County Name	B3. State
HOLLYWOOD 125113	BROWARD	FL

B4. Map/Panel Number	B5. Suffix	B6. FIRM Index Date	B7. FIRM Panel Effective/Revised Date	B8. Flood Zone(s)	B9. Base Flood Elevation(s) (Zone AO, use base flood depth)
12011C0317	G	10/2/97	7/21/95	AE	8'

B10. Indicate the source of the Base Flood Elevation (BFE) data or base flood depth entered in Item B9.
☐ FIS Profile ☒ FIRM ☐ Community Determined ☐ Other (Describe) ____

B11. Indicate elevation datum used for BFE in Item B9: ☒ NGVD 1929 ☐ NAVD 1988 ☐ Other (Describe) ____

B12. Is the building located in a Coastal Barrier Resources System (CBRS) area or Otherwise Protected Area (OPA)? ☐ Yes ☒ No
Designation Date ____ ☐ CBRS ☐ OPA

SECTION C - BUILDING ELEVATION INFORMATION (SURVEY REQUIRED)

C1. Building elevations are based on: ☐ Construction Drawings* ☐ Building Under Construction* ☒ Finished Construction
*A new Elevation Certificate will be required when construction of the building is complete.

C2. Elevations – Zones A1-A30, AE, AH, A (with BFE), VE, V1-V30, V (with BFE), AR, AR/A, AR/AE, AR/A1-A30, AR/AH, AR/AO. Complete Items C2.a-g below according to the building diagram specified in Item A7.

Benchmark Utilized COUNTY Vertical Datum NGVD

Conversion/Comments ____

			Check the measurement used.
a)	Top of bottom floor (including basement, crawl space, or enclosure floor)	5.09	☒ feet ☐ meters (Puerto Rico only)
b)	Top of the next higher floor	N/A	☐ feet ☐ meters (Puerto Rico only)
c)	Bottom of the lowest horizontal structural member (V Zones only)	N/A	☐ feet ☐ meters (Puerto Rico only)
d)	Attached garage (top of slab)	N/A	☒ feet ☐ meters (Puerto Rico only)
e)	Lowest elevation of machinery or equipment servicing the building (Describe type of equipment in Comments)	10.09	☒ feet ☐ meters (Puerto Rico only)
f)	Lowest adjacent (finished) grade (LAG)	4.7	☒ feet ☐ meters (Puerto Rico only)
g)	Highest adjacent (finished) grade (HAG)	4.9	☒ feet ☐ meters (Puerto Rico only)

SECTION D - SURVEYOR, ENGINEER, OR ARCHITECT CERTIFICATION

This certification is to be signed and sealed by a land surveyor, engineer, or architect authorized by law to certify elevation information. *I certify that the information on this Certificate represents my best efforts to interpret the data available. I understand that any false statement may be punishable by fine or imprisonment under 18 U.S. Code, Section 1001.*

☒ Check here if comments are provided on back of form.

lic #3869

Certifier's Name ROBERT L THOMPSON License Number 3869

Title PROFESSIONAL LAND SURVEYOR Company Name ACCURATE LAND SURVEYORS

Address 1150 E ATLANTIC BLVD City POMPANO BEACH State FL ZIP Code 33060

Signature Date 10/29/08 Telephone 954-782-1441

10-29-08

IMPORTANT: In these spaces, copy the corresponding information from Section A.	For Insurance Company Use:
Building Street Address (including Apt., Unit, Suite, and/or Bldg. No.) or P.O. Route and Box No. 1404 JACKSON ST	Policy Number
City HOLLYWOOD State FL ZIP Code 33020	Company NAIC Number

SECTION D - SURVEYOR, ENGINEER, OR ARCHITECT CERTIFICATION (CONTINUED)

Copy both sides of this Elevation Certificate for (1) community official, (2) insurance agent/company, and (3) building owner.

Comments JOB NO. 01-427BC; ELECTRIC METER 10.09'NGVD

Signature ROBERT L. THOMPSON Date 10/29/08

☐ Check here if attachments

SECTION E - BUILDING ELEVATION INFORMATION (SURVEY NOT REQUIRED) FOR ZONE AO AND ZONE A (WITHOUT BFE)

For Zones AO and A (without BFE), complete Items E1-E5. If the Certificate is intended to support a LOMA or LOMR-F request, complete Sections A, B, and C. For Items E1-E4, use natural grade, if available. Check the measurement used. In Puerto Rico only, enter meters.

E1. Provide elevation information for the following and check the appropriate boxes to show whether the elevation is above or below the highest adjacent grade (HAG) and the lowest adjacent grade (LAG).
a) Top of bottom floor (including basement, crawl space, or enclosure) is _____.____ ☐ feet ☐ meters ☐ above or ☐ below the HAG.
b) Top of bottom floor (including basement, crawl space, or enclosure) is _____.____ ☐ feet ☐ meters ☐ above or ☐ below the LAG.

E2. For Building Diagrams 6-8 with permanent flood openings provided in Section A Items 8 and/or 9 (see page 8 of Instructions), the next higher floor (elevation C2.b in the diagrams) of the building is _____.____ ☐ feet ☐ meters ☐ above or ☐ below the HAG.

E3. Attached garage (top of slab) is _____.____ ☐ feet ☐ meters ☐ above or ☐ below the HAG.

E4. Top of platform of machinery and/or equipment servicing the building is _____.____ ☐ feet ☐ meters ☐ above or ☐ below the HAG.

E5. Zone AO only: If no flood depth number is available, is the top of the bottom floor elevated in accordance with the community's floodplain management ordinance? ☐ Yes ☐ No ☐ Unknown. The local official must certify this information in Section G.

SECTION F - PROPERTY OWNER (OR OWNER'S REPRESENTATIVE) CERTIFICATION

The property owner or owner's authorized representative who completes Sections A, B, and E for Zone A (without a FEMA-issued or community-issued BFE) or Zone AO must sign here. *The statements in Sections A, B, and E are correct to the best of my knowledge.*

Property Owner's or Owner's Authorized Representative's Name
ROBERT L. THOMPSON LICENSE NO. 3869

Address 1150 E ATLANTIC BLVD City POMPANO BEACH State FL ZIP Code 33060

Signature Date Telephone 954-782-1441

Comments

☐ Check here if attachments

SECTION G - COMMUNITY INFORMATION (OPTIONAL)

The local official who is authorized by law or ordinance to administer the community's floodplain management ordinance can complete Sections A, B, C (or E), and G of this Elevation Certificate. Complete the applicable item(s) and sign below. Check the measurement used in Items G8. and G9.

G1. ☒ The information in Section C was taken from other documentation that has been signed and sealed by a licensed surveyor, engineer, or architect who is authorized by law to certify elevation information. (Indicate the source and date of the elevation data in the Comments area below.)

G2. ☐ A community official completed Section E for a building located in Zone A (without a FEMA-issued or community-issued BFE) or Zone AO.

G3. ☐ The following information (Items G4.-G9.) is provided for community floodplain management purposes.

G4. Permit Number	G5. Date Permit Issued	G6. Date Certificate Of Compliance/Occupancy Issued

G7. This permit has been issued for: ☐ New Construction ☐ Substantial Improvement

G8. Elevation of as-built lowest floor (including basement) of the building: _____.____ ☐ feet ☐ meters (PR) Datum _____

G9. BFE or (in Zone AO) depth of flooding at the building site: _____.____ ☐ feet ☐ meters (PR) Datum _____

Local Official's Name Title

Community Name Telephone

Signature Date

Comments

☒ Check here if attachments

FLORIDA ENERGY EFFICIENCY CODE FOR BUILDING CONSTRUCTION

FORM 600C-04R — Residential Limited Applications Prescriptive Method C — SOUTH 7 8 9

Small Additions, Renovations & Building Systems

Compliance with Method C of Sub-Chapter 6 of the Florida Energy Efficiency Code may be demonstrated by the use of Form 600C-04 for additions of 500 square feet or less, site-installed components of manufactured homes, and renovations to single- and multiple-family residences. Alternative methods are provided for additions by use of Form 600B-04 or 600A-04.

PROJECT NAME: AND ADDRESS:	ROOF REPLACE 1404 SACKS DR HOLLYWOOD FL.	BUILDER:	
		PERMITTING OFFICE: HOLLYWOOD	CLIMATE ZONE: 7 ☐ 8 ☒ 9 ☐
OWNER: KONDOLF		PERMIT NO.:	JURISDICTION NO.: 1 5 2 1 0 0

SMALL ADDITIONS TO EXISTING RESIDENCES (600 square feet or less of conditioned area). Prescriptive requirements in Tables 6C-1, 6C-2, and 6C-3 apply only to the components of the addition, not to the existing building. Space heating, cooling, and water heating equipment efficiency levels must be met only when equipment is installed specifically to serve the addition or is being installed in conjunction with the addition construction. Components separating unconditioned spaces from conditioned spaces must meet the prescribed minimum insulation levels. RENOVATIONS (Residential buildings undergoing renovations costing more than 30% of the assessed value of the building). Prescriptive requirements in Tables 6C-1 and 6C-2 apply only to the components and equipment being renovated or replaced. MANUFACTURED HOMES AND BUILDINGS. Only site-installed components and features are covered by this form. BUILDING SYSTEMS Comply when complete new system is installed.

	Please Print	CK
1. Renovation, Addition, New System or Manufactured Home	1. RENOVATION	
2. Single-family detached or Multiple-family attached	2. SFD	
3. If Multiple-family–No. of units covered by this submission	3.	
4. Conditioned floor area (sq. ft.)	4. NA	
5. Predominant eave overhang (ft.)	5. 2	
6. Glass type and area: GLASS REMOVED = 113 SF; GLASS INSTALLED = 113 SF; NO NEW GLASS	Single Pane / Double Pane	
a. Clear glass	6a. ____ sq. ft. ____ sq. ft.	
b. Tint, film or solar screen	6b. ____ sq. ft. ____ sq. ft.	
7. Percentage of glass to floor area	7. 0 %	
8. Floor type and insulation: N/A		
a. Slab-on-grade (R-value)	8a. R = ____ ____ lin. ft.	
b. Wood, raised (R-value)	8b. R = ____ ____ sq. ft.	
c. Wood, common (R-value)	8c. R = ____ ____ sq. ft.	
d. Concrete, raised (R-value)	8d. R = ____ ____ sq. ft.	
e. Concrete, common (R-value)	8e. R = ____ ____ sq. ft.	
9. Wall type and insulation:		
a. Exterior: 1. Masonry (insulation R-value)	9a-1 R = 5 118 sq. ft.	
2. Wood frame (insulation R-value)	9a-2 R = 11 256 sq. ft.	
b. Adjacent: 1. Masonry (insulation R-value)	9b-1 R = ____ ____ sq. ft.	
2. Wood frame (insulation R-value)	9b-2 R = ____ ____ sq. ft.	
c. Marriage Walls of Multiple Units* (Yes/No)	9c. ____ ____	
10. Ceiling type and insulation:		
a. Under attic (insulation R-value)	10a. R = 30 758 sq. ft.	
b. Single assembly (insulation R-value)	10b. R = ____ ____ sq. ft.	
11. Cooling system* (Types: central, room unit, package terminal A.C., gas, existing, none)	11. Type: NA SEER/EER: ____	
12. Heating system* (Types: heat pump, elec. strip, natural gas, LP-gas, gas h.p., room or PTAC, existing, none)	12. Type: NA HSPF/COP/AFUE: ____	
13. Air distribution system*		
a. Backflow damper or single package systems* (Yes/No)	13a. NA	
b. Ducts on marriage walls adequately sealed* (Yes/No)	13b. ____	
14. Hot water system: (Types: elec., natural gas, other, existing, none)	14. Type: NA EF: ____	

* Pertains to manufactured homes with site-installed components.

MAR 25 2009

I hereby certify that the plans and specifications covered by the calculation are in compliance with the Florida Energy Code.

PREPARED BY: [signature] DATE: 1.14.09

I hereby certify that this building is in compliance with the Florida Energy Code.

OWNER AGENT: [signature] DATE: 1.14.09

Review of plans and specifications covered by this calculation indicates compliance with the Florida Energy Code. Before construction is completed, this building will be inspected for compliance in accordance with Section 553.908, F.S.

BUILDING OFFICIAL: ____

DATE: ____

CUSTOM TRUSS
2501 South Andrews Avenue
Fort Lauderdale, FL 33316
954-786-1800

Project Information:
Name: ADD
Address: 1404 JACKSON STREET
City, State, Zip: HOLLYWOOD, FL

GENERAL TRUSS ENGINEERING CRITERIA & DESIGN LOADS:

Building Code & Chapter: FBC2004
Computer Program Used: VIEW by Alpine
Gravity: 55 psf Roof Total Load
Gravity: N/A psf Floor Total Load
Wind: 140 mph from ASCE7-02 code (e.g. ASCE 7) Exp C

This package includes a Truss Index Sheet and 27 individual truss design drawings, together with the attached index of the Truss System design drawings. I hereby certify that this serves as a cover sheet in accordance with Chapter 61G15-31.003 of the Florida Board of Professional Regulations.

APR 04 20

Note: Furthermore, the responsibility of the undersigned is solely limited to the design of the truss components shown. The suitability and use of these trusses for any building is the responsibility of the building designer.

Delegated Engineer: MORRIS A. SHASHOUA, P.E.
MAURICE A. SHASHOUA, P.E., INC.
FL Reg Nos: EB5251 & 19554
1908 NW 112 AVENUE, CORAL SPRINGS, FL., 33071
TEL: 954-753-1988

APPROVED
APR 13 2009
CITY OF HOLLYWOOD, FLA.
STRUCTURAL

No.	Truss ID	Date
1	AG1	04/02/09
2	AG2	04/02/09
3	AG3	04/02/09
4	EJ10	04/02/09
5	EJ6	04/02/09
6	EJ7	04/02/09
7	HJ10A	04/02/09
8	HJ10	04/02/09
9	J9A	04/02/09
10	J9	04/02/09
11	HJ7	04/02/09
12	J7A	04/02/09
13	J7	04/02/09
14	J5X	04/02/09
15	J5A	04/02/09
16	J5	04/02/09
17	J3	04/02/09
18	J3A	04/02/09
19	J1	04/02/09
20	U1	04/02/09
21	UG1	04/02/09
22	UEJ9	04/02/09
23	UHJ9	04/02/09
24	UJ7	04/02/09
25	UJ5	04/02/09

No.	Truss ID	Date
26	UJ3	04/02/09
27	UJ1	04/02/09

ROBERT G. ISHMAN P.A.
ARCHITECT
2117 HOLLYWOOD BLVD.
HOLLYWOOD, FLORIDA 33020
Lic.# AR-0012684 / AA-C001769
Tel.# (954) 929-9695 / Fax # (954) 929-9597
RGIPA@MINDSPRING.COM

PRELIMINARY
REVISIONS
APPROVED YES
SIGNATURE-x
Date: 4809

Job: (20090173) -JOE HART BUILDER INC. -ADDTION / AG1

THIS DWG. PREPARED BY THE ALPINE JOB DESIGNER PROGRAM FROM TRUSS MFR'S LAYOUT

Top chord 2x8 SP 2400f-2.0E :T1 2x6 SP #2 Dense:
Bot chord 2x8 SP 2400f-2.0E
Webs 2x4 SP #3
:W1, W6, W7, W28 2x8 SP 2400f-2.0E: :W2, W27 2x6 SP SS Dense:
:W3, W26 2x6 SP #2 Dense: :W5 2x4 SP SS: :W8 2x4 SP #2:
:Lt Level Return 2x4 SP #3:Rt Level Return 2x4 SP #3:

SPECIAL LOADS
------(LUMBER DUR.FAC.=1.33 / PLATE DUR.FAC.=1.33)

TC - From	92 PLF	at	-2.00	to	92 PLF	at 4.31
TC - From	92 PLF	at	4.31	to	92 PLF	at 5.65
TC - From	592 PLF	at	5.65	to	592 PLF	at 21.98
TC - From	92 PLF	at	21.98	to	92 PLF	at 23.31
TC - From	92 PLF	at	23.31	to	92 PLF	at 30.23
BC - From	20 PLF	at	0.00	to	20 PLF	at 0.06
BC - From	20 PLF	at	0.06	to	20 PLF	at 27.56
BC - From	20 PLF	at	27.56	to	20 PLF	at 28.23
PLB- From	4 PLF	at	-1.95	to	4 PLF	at -0.16
PLB- From	4 PLF	at	28.39	to	4 PLF	at 30.18

TC - 494 LB Conc. Load at 4.36
TC - 270 LB Conc. Load at 23.25
BC - 162 LB Conc. Load at 9.34
BC - 6657 LB Conc. Load at 5.77, 21.85
BC - 323 LB Conc. Load at 6.37, 8.37, 10.37, 12.37, 13.81, 15.25, 17.25, 19.25, 21.25
BC - 386 LB Conc. Load at 23.31

(**) 4 plate(s) require special positioning. Refer to scaled plate plot details for special positioning requirements.

Wind reactions based on MWFRS pressures.

End verticals not exposed to wind pressure.

Calculated vertical deflection is 0.35" due to live load and 0.64" due to total load at X = 12-6-10.

Calculated vertical deflection is 0.35" due to live load at X = 12-6-10 and 0.64" due to total load at X = 12-6-10. L/240 live and L/180 total load.

2 Complete Trusses Required

Nailing Schedule: [10d_Boxer_Gun_(0.128"x3",_min.)_nails]
Top Chord: 1 Row @ 5.00" o.c.
Bot Chord: 2 Rows @ 5.50" o.c. (Each Row)
Webs : 1 Row @ 4" o.c.
Use equal spacing between rows and stagger nails in each row to avoid splitting.

(I) - plates so marked were sized using a Fabrication Tolerance of .0X and a Rotational Tolerance of 0 degrees.

140 mph wind, 15.00 Ft mean hgt, ASCE 7-02, CLOSED bldg, Located anywhere in roof, CAT II, EXP C, wind TC DL=5.0 psf, wind BC DL=5.0 psf, Iw=1.00 GCpi+/-=0.18

(R) Continuous lateral bracing equally spaced on member.

Deflection meets L/240 live and L/180 total

All wind load cases on this truss have a 1.33 duration factor.

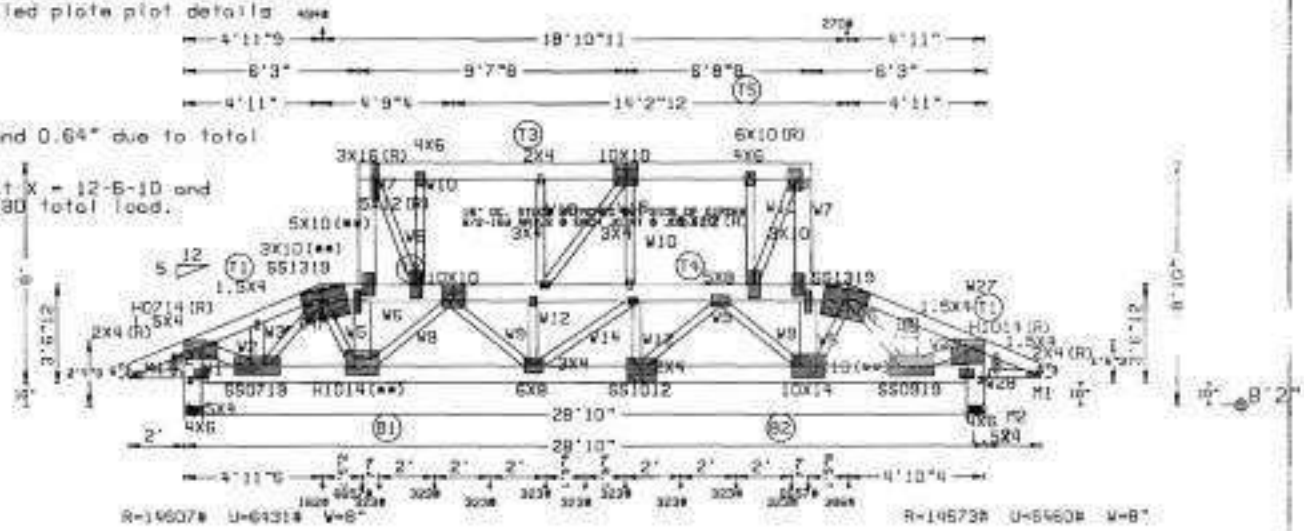

APPROVED
APR 13 2009
CITY OF HOLLYWOOD, FLA.
STRUCTURAL

TAG = T1
PLT. TYP.-WAVE

DESIGN CRIT=FBC2007/RMI02/TPI-2002 FT/RT=20F (DF)/10(0)

QTY= 1 PLIES= 2 TOTAL= 2

REV. 8.07.00.1218. SEQ = 203553 SCALE =0.1470

Custom Designed Trusses
777 S.W. 12th Avenue
Pompano Beach, FL 33069
Phone 954-785-9900
Fax 954-785-9904

WARNING TRUSSES REQUIRE EXTREME CARE IN FABRICATING, HANDLING, SHIPPING, INSTALLING AND BRACING. REFER TO BCSI 1-03 (BUILDING COMPONENT SAFETY INFORMATION), PUBLISHED BY TPI (TRUSS PLATE INSTITUTE, 583 D'ONOFRIO DR., SUITE 200, MADISON, WI. 53719) AND WTCA (WOOD TRUSS COUNCIL OF AMERICA, 6300 ENTERPRISE LN, MADISON, WI 53719) FOR SAFETY PRACTICES PRIOR TO PERFORMING THESE FUNCTIONS. UNLESS OTHERWISE INDICATED, TOP CHORD SHALL HAVE PROPERLY ATTACHED STRUCTURAL PANELS AND BOTTOM CHORD SHALL HAVE A PROPERLY ATTACHED RIGID CEILING. **IMPORTANT** FURNISH COPY OF THIS DESIGN TO INSTALLATION CONTRACTOR. ALPINE ENGINEERED PRODUCTS, INC., SHALL NOT BE RESPONSIBLE FOR ANY DEVIATION FROM THIS DESIGN; ANY FAILURE TO BUILD THE TRUSS IN CONFORMANCE WITH TPI, DSR FABRICATING, HANDLING, SHIPPING, INSTALLING & BRACING OF TRUSSES. DESIGN CONFORMS WITH APPLICABLE PROVISIONS OF NDS (NATIONAL DESIGN SPEC. BY AF&PA) AND TPI. ALPINE CONNECTOR PLATES ARE MADE OF 20/18/16GA (W,H/S/K) ASTM A653 GRADE 40/SQ (W,H/H,S) GALV. STEEL. APPLY PLATES TO EACH FACE OF TRUSS AND, UNLESS OTHERWISE LOCATED ON THIS DESIGN, POSITION PER DRAWINGS 160A-Z. ANY INSPECTION OF PLATES FOLLOWED BY (I) SHALL BE PER ANNEX A3 OF TPI 1-2002 SEC. 3. A SEAL ON THIS DRAWING INDICATES ACCEPTANCE OF PROFESSIONAL ENGINEERING RESPONSIBILITY SOLELY FOR THE TRUSS COMPONENT DESIGN SHOWN. THE SUITABILITY AND USE OF THIS COMPONENT FOR ANY BUILDING IS THE RESPONSIBILITY OF THE BUILDING DESIGNER, PER ANSI/TPI 1 SEC. 2.

Morris A. Shoaboua, P.E.
MAURICE A. SHABOUA, P.E., INC
1909 NW 112 AVE.
CORAL SPRINGS, FL. 33071
(954) 753-1969
LICENSE Nos.E05251 & 18554

TC LL	30.0psf	REF	
TC DL	15.0psf	DATE	04-02-2009
BC DL	10.0psf	DRWG	
BC LL	0.0psf		JR
TOT.LD.	55.0psf	O/A LEN.	281000
DUR.FAC.	1.33	JOB #	20090173
SPACING	24.0"	TYPE	HIPS

Job:(20090173) -JOE HART BUILDER INC. -ADDTION / AG2

THIS DWG. PREPARED BY THE ALPINE JOB DESIGNER PROGRAM FROM TRUSS MFR'S LAYOUT

Top chord 2x8 SP 2400F-2.0E :T1 2x6 SP #2 Dense:
Bot chord 2x8 SP 2400F-2.0E
Webs 2x4 SP #3
:W1, W7, W8, W34 2x8 SP 2400F-2.0E: :W2, W33 2x6 SP SS Dense:
:W3, W4, W31, W32 2x6 SP #2 Dense: :W6 2x4 SP SS: :W9 2x4 SP #2:
:Lt Level Return 2x4 SP #3:;Rt Level Return 2x4 SP #3:

2 Complete Trusses Required

SPECIAL LOADS
------LUMBER DUR.FAC.=1.33 / PLATE DUR.FAC.=1.33)

TC - From	92 PLF at	-2.00 to	92 PLF at	4.31
TC - From	92 PLF at	4.31 to	92 PLF at	5.65
TC - From	582 PLF at	5.65 to	582 PLF at	21.98
TC - From	92 PLF at	21.98 to	92 PLF at	23.31
TC - From	92 PLF at	23.31 to	92 PLF at	30.23
BC - From	20 PLF at	0.00 to	20 PLF at	0.06
BC - From	20 PLF at	0.06 to	20 PLF at	27.56
BC - From	20 PLF at	27.56 to	20 PLF at	28.23
PLB- From	4 PLF at	-1.95 to	4 PLF at	-0.16
PLB- From	4 PLF at	28.39 to	4 PLF at	30.18

PLB- 6682 LB Conc. Load at (5.77,9.04), (21.85,9.04)
PLB- 1345 LB Conc. Load at (7.27,9.04)
PLB- 395 LB Conc. Load at (9.29,9.04), (11.29,9.04), (13.29,9.04)
(14.33,9.04), (16.33,9.04), (18.33,9.04)
PLB- 1328 LB Conc. Load at (20.36,9.04)

(I) - plates so marked were sized using a Fabrication Tolerance of 0% and a Rotational Tolerance of 0 degrees.

Wind reactions based on MWFRS pressures.

End verticals not exposed to wind pressure.

Deflection meets L/240 live and L/180 total load.

** The maximum concentrated load is 6682# **

All wind load cases on this truss have a 1.33 duration factor.

Nailing Schedule: [10d_Box_or_Gun_(0.128"x3",_min.)_nails]
Top Chord: 1 Row @ 5.50" o.c.
Bot Chord: 2 Rows @ 5.00" o.c. (Each Row)
Webs : 1 Row @ 4" o.c.
Use equal spacing between rows and stagger nails in each row to avoid splitting.

140 mph wind, 15.00 ft mean hgt, ASCE 7-02, CLOSED [illegible], located on roof, CAT II, EXP C, wind TC DL=5.0 psf, wind BC DL=5.0 psf, Iw=1.00 GCpi(+/-)=0.18

Calculated vertical deflection is 0.37" due to live load and 0.66" due to total load at X = 12-6-10.

Calculated vertical deflection is 0.37" due to live load at X = 12-6-10 and 0.66" due to total load at X = 12-6-10. L/240 live and L/180 total load.

APPROVED
APR 13 2009
CITY OF HOLLYWOOD, FLA.
STRUCTURAL

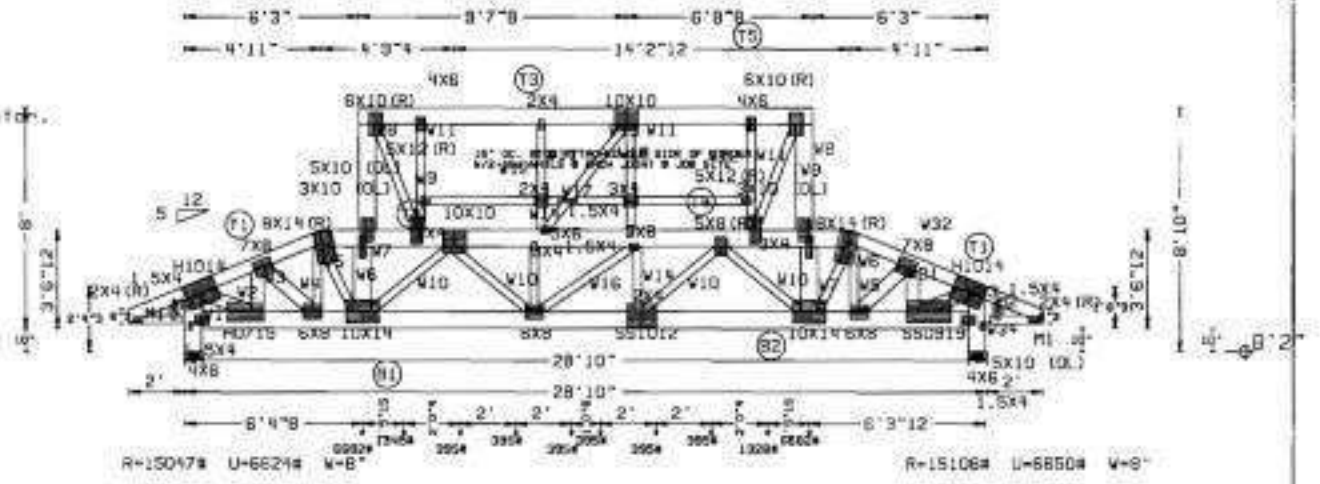

TAG = T3
PLT. TYP. -WAVE

DESIGN CRIT-FBC2004RMWFRS/TPI-2002 FL/RTI-20070501/10100

QTY= 1 PLIES= 2 TOTAL= 2

REV. 8.07.00.1218 SCALE -0.147D

SEQ = 203557

Custom Designed Truss Co.
777 S.W. 12th Avenue
Pompano Beach, FL 33069
Phone: 954-786-8800
Fax: 954-786-8804

WARNING TRUSSES REQUIRE EXTREME CARE IN FABRICATING, HANDLING, SHIPPING, INSTALLING AND BRACING. REFER TO BCSI 1-03 (BUILDING COMPONENT SAFETY INFORMATION), PUBLISHED BY TPI (TRUSS PLATE INSTITUTE, 583 D'ONOFRIO DR.; SUITE 200; MADISON, WI 53719) AND WTCA (WOOD TRUSS COUNCIL OF AMERICA, 6300 ENTERPRISE LN, MADISON, WI 53719) FOR SAFETY PRACTICES PRIOR TO PERFORMING THESE FUNCTIONS. UNLESS OTHERWISE INDICATED, TOP CHORD SHALL HAVE PROPERLY ATTACHED STRUCTURAL PANELS AND BOTTOM CHORD SHALL HAVE A PROPERLY ATTACHED RIGID CEILING.
IMPORTANT FURNISH COPY OF THIS DESIGN TO INSTALLATION CONTRACTOR. ALPINE ENGINEERED PRODUCTS, INC., SHALL NOT BE RESPONSIBLE FOR ANY DEVIATION FROM THIS DESIGN; ANY FAILURE TO BUILD THE TRUSS IN CONFORMANCE WITH TPI 1: DX FABRICATING, HANDLING, SHIPPING, INSTALLING & BRACING OF TRUSSES. DESIGN CONFORMS WITH APPLICABLE PROVISIONS OF NDS (NATIONAL DESIGN SPEC. BY AF&PA) AND TPI. ALPINE CONNECTOR PLATES ARE MADE OF 20/18/16GA (W,H/S/K) ASTM A653 GRADE 40/40 (W,K/H,S) GALV. STEEL. APPLY PLATES TO EACH FACE OF TRUSS AND, UNLESS OTHERWISE LOCATED ON THIS DESIGN, POSITION PER DRAWING 160A-Z. ANY INSPECTION OF PLATES FOLLOWED BY (I) SHALL BE PER ANNEX A3 OF TPI 1-2002 SEC. 3. A SEAL ON THIS DRAWING INDICATES ACCEPTANCE OF PROFESSIONAL ENGINEERING RESPONSIBILITY SOLELY FOR THE TRUSS COMPONENT DESIGN SHOWN. THE SUITABILITY AND USE OF THIS COMPONENT FOR ANY BUILDING IS THE RESPONSIBILITY OF THE BUILDING DESIGNER, PER ANSI/TPI 1 SEC. 2.

Marcia A. Shamhoun, P.E.
MARCIA A. SHAMHOUN, P.E., INC
1938 NW 112 AVE.
CORAL SPRINGS, FL. 33071
(954) 753-1388
LICENSE Nos.43525; & 19554

TC LL	30.0psf	REF	
TC DL	15.0psf	DATE	04-08-2009
BC DL	10.0psf	DRWG	
BC LL	0.0psf		JA
TOT.LD.	55.0psf	O/A LEN.	28'10"0
DUR.FAC.	1.33	JOB #:	20090173
SPACING	24.0"	TYPE	HIPS

Job: (20090173) -JOE HART BUILDER INC. -ADDTION / PG3

THIS DWG. PREPARED BY THE ALPINE JOB DESIGNER PROGRAM FROM TRUSS MFR'S LAYOUT

Top chord 2x8 SP 2400F-2.0E
Bot chord 2x6 SP #2 Dense
Webs 2x4 SP #3 :W1 2x8 SP 2400F-2.0E:
:W7 2x6 SP #2 Dense:

SPECIAL LOADS
------(LUMBER DUR.FAC.=1.33 / PLATE DUR.FAC.=1.33)
TC - From 90 PLF at 0.00 to 90 PLF at 15.75
BC - From 20 PLF at 0.00 to 20 PLF at 15.75
TC - 780 LB Conc. Load at 1.81, 3.81, 11.94, 13.67
TC - 1650 LB Conc. Load at 5.81, 9.94
TC - 1200 LB Conc. Load at 7.81, 7.94
PLT- 238 LB Conc. Load at (1.97,13.08), (4.01,13.08), (6.01,13.08) (8.00,13.08), (10.00,13.08), (11.99,13.08), (14.04,13.08) BC - 160 LB Conc. Load at 2.00, 4.08, 6.00, 8.24, 10.00 12.00, 14.00

140 mph wind, 15.06 ft mean hgt, ASCE 7-02, CLOSED bldg, Located anywhere in roof, CAT II, EXP C, wind TC DL=5.0 psf, wind BC DL=5.0 psf. Iw=1.00 GCpi(+/-)=0.18

Component and cladding wind pressures considered for uplift reactions.

End verticals not exposed to wind pressure.

Bottom chord checked for 10.00 psf non-concurrent live load.

Deflection meets L/240 live and L/180 total load.

Calculated vertical deflection is 0.05" due to live load at X = 7-10-7, and 0.09" due to total load at X = 7-10-7. L/240 live and L/180 total load.

All wind load cases on this truss have a 1.33 duration factor.

2 Complete Trusses Required

Nailing Schedule: (10d Box or Gun (0.128"x3", min.) nails)
Top Chord: 2 Rows @ 4.50" o.c. (Each Row)
Bot Chord: 1 Row @12.00" o.c.
Webs : 1 Row @ 4" o.c.
Use equal spacing between rows and stagger nails in each row to avoid splitting.

Calculated vertical deflection is 0.05" due to live load and 0.09" due to total load at X = 7-10-7.

Truss must be installed as shown with top chord up.
The TC of this truss shall be braced with attached spans at 24" OC in lieu of structural sheathing.

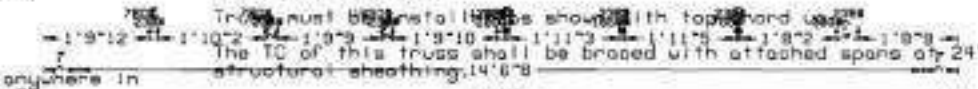

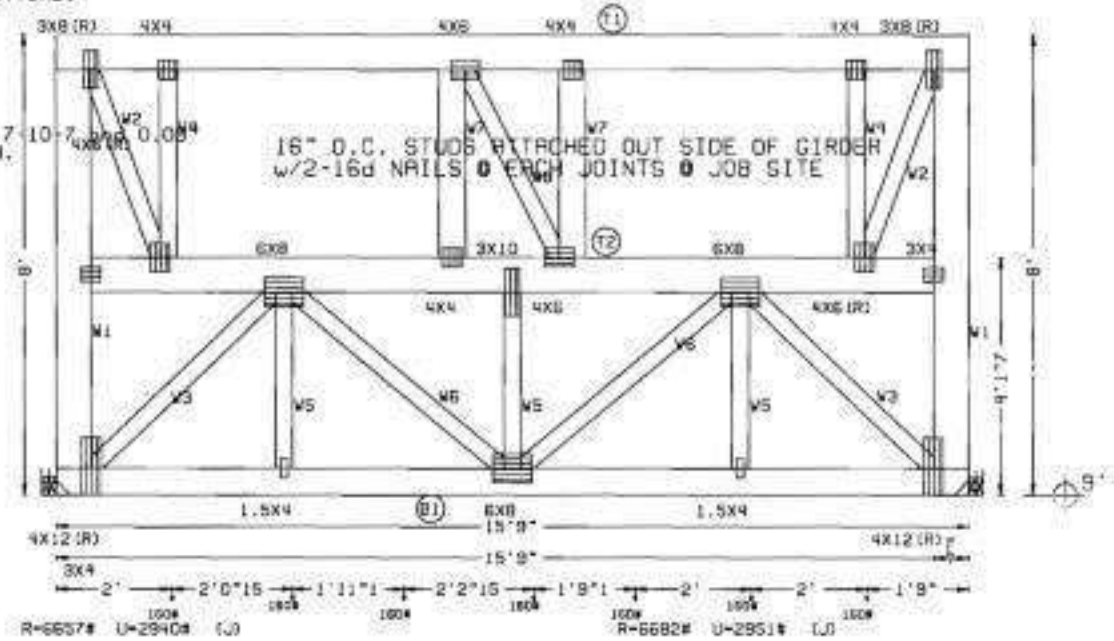

APPROVED
APR 13 2009
CITY OF HOLLYWOOD, FLA.
STRUCTURAL

TAG - T37
PLT. TYP.-MAVE

DESIGN CRIT=FBC2004/TPI-2002 FT/RT=20(0)/10(0)

QTY= 2 PLIES= 2 TOTAL= 4

REV. 8.0/.00.1218. SEQ = 205
SCALE -0.3...

Gordon Designed Truss Co.
777 S.W. 12th Avenue
Pompano Beach Fl. 33069
Phone: 954-786-8503
Fax: 954-786-8504

WARNING TRUSSES REQUIRE EXTREME CARE IN FABRICATING, HANDLING, SHIPPING, INSTALLING AND BRACING. REFER TO BCSI 1-03 (BUILDING COMPONENT SAFETY INFORMATION), PUBLISHED BY TPI (TRUSS PLATE INSTITUTE, 583 D'ONOFRIO DR., SUITE 200, MADISON, WI. 53719) AND WTCA (WOOD TRUSS COUNCIL OF AMERICA, 6300 ENTERPRISE LN, MADISON, WI 53719) FOR SAFETY PRACTICES PRIOR TO PERFORMING THESE FUNCTIONS. UNLESS OTHERWISE INDICATED, TOP CHORD SHALL HAVE PROPERLY ATTACHED STRUCTURAL PANELS AND BOTTOM CHORD SHALL HAVE A PROPERLY ATTACHED RIGID CEILING. **IMPORTANT** FURNISH COPY OF THIS DESIGN TO INSTALLATION CONTRACTOR. ALPINE ENGINEERED PRODUCTS, INC., SHALL NOT BE RESPONSIBLE FOR ANY DEVIATION FROM THIS DESIGN; ANY FAILURE TO BUILD THE TRUSS IN CONFORMANCE WITH TPI; OR FABRICATING, HANDLING, SHIPPING, INSTALLING & BRACING OF TRUSSES. DESIGN CONFORMS WITH APPLICABLE PROVISIONS OF NDS (NATIONAL DESIGN SPEC. BY AF&PA) AND TPI. ALPINE CONNECTOR PLATES ARE MADE OF 20/18/16GA (W,H/S/M) ASTM A653 GRADE 40/60 (W,H/M,S) GALV. STEEL. APPLY PLATES TO EACH FACE OF TRUSS AND, UNLESS OTHERWISE LOCATED ON THIS DESIGN, POSITION PER DRAWINGS 16DA-Z. ANY INSPECTION OF PLATES FOLLOWED BY (1) SHALL BE PER ANSI/TPI 1-2002 SEC. 3. A SEAL ON THIS DRAWING INDICATES ACCEPTANCE OF PROFESSIONAL ENGINEERING RESPONSIBILITY SOLELY FOR THE TRUSS COMPONENT DESIGN SHOWN. THE SUITABILITY AND USE OF THIS COMPONENT FOR ANY BUILDING IS THE RESPONSIBILITY OF THE BUILDING DESIGNER, PER ANSI/TPI 1 SEC. 2.

Darrin R. Stephens, P.E.
PHILIP R. MARSHALL, P.E., INC
1000 NW 112 AVE.
CORAL SPRINGS, FL. 33071
(954) 753-1888
LICENSE Nos.E30251 & 19554

TC LL	30.0psf	REF	
TC DL	15.0psf	DATE	04-06-2009
BC DL	10.0psf	DRWG	
BC LL	0.0psf		JR
TOT.LD.	55.0psf	O/A LEN.	150800
DUR.FAC.	1.33	JOB #:	20090173
SPACING	24.0"	TYPE	GABL

Job:(20090173) -JOE HART BUILDER INC. -ADDTION / EJ10

THIS DWG. PREPARED BY THE ALPINE JOB DESIGNER PROGRAM FROM TRUSS MFR'S LAYOUT

Top chord 2x4 SP #2
Bot chord 2x4 SP #2
Webs 2x6 SP #2 Dense :W2 2x4 SP #3:

Left end vertical not exposed to wind pressure.

Calculated horizontal deflection is 0.30" due to live load and 0.08" due to dead load.

Calculated vertical deflection is 0.10" due to live load and 0.19" due to total load at X = 4-8-4.

All wind load cases on this truss have a 1.33 duration factor.

140 mph wind, 15.00 ft mean hgt, ASCE 7-02, CLOSED bldg, Located anywhere in roof, CAT II, EXP C, wind TC DL=5.0 psf, wind BC DL=5.0 psf. Iw=1.00 GCpi(+/-)=0.18

Component and cladding wind pressures considered for uplift reacti

Roof overhang/cantilever supports 2.00 psf soffit load.

Bottom chord checked for 10.00 psf non-concurrent live load.

Deflection meets L/240 live and L/180 total lo

Calculated vertical deflection is -0.18" due to live load at X = 1-9-6 and -0.23" due to total load at X = 1-9-6, L/240 live and L/180 total lo

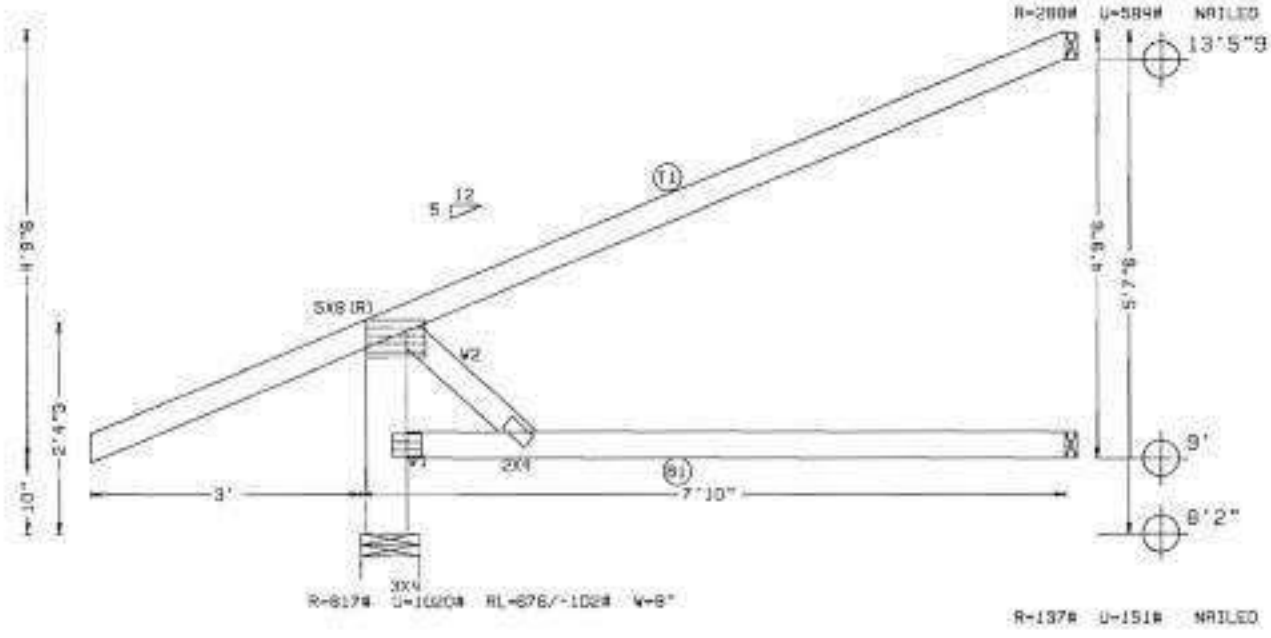

APPROVED
APR 13 2009
CITY OF HOLLYWOOD, FLA.

TAG = T38
PLT. TYP.-WAVE

DESIGN CRIT=FBC2004WAVE/TPI-2002 FT/AT=20/10/0/10000

QTY= 8 TOTAL= 8

REV. 8.07.00.1218.

SEQ = 201566
SCALE =0.4765

Centers Designed Trusses Co.
777 S.W. 12th Avenue
Pompano Beach, FL 33060
Phone: 954-786-8500
Fax: 954-786-8804

WARNING TRUSSES REQUIRE EXTREME CARE IN FABRICATING, HANDLING, SHIPPING, INSTALLING AND BRACING. REFER TO BCSI 1-03 (BUILDING COMPONENT SAFETY INFORMATION), PUBLISHED BY TPI (TRUSS PLATE INSTITUTE, 583 D'ONOFRIO DR., SUITE 200, MADISON, WI. 53718) AND WTCA (WOOD TRUSS COUNCIL OF AMERICA, 6300 ENTERPRISE LN, MADISON, WI 53718) FOR SAFETY PRACTICES PRIOR TO PERFORMING THESE FUNCTIONS. UNLESS OTHERWISE INDICATED, TOP CHORD SHALL HAVE PROPERLY ATTACHED STRUCTURAL PANELS AND BOTTOM CHORD SHALL HAVE A PROPERLY ATTACHED RIGID CEILING.

IMPORTANT FURNISH COPY OF THIS DESIGN TO INSTALLATION CONTRACTOR. ALPINE ENGINEERED PRODUCTS, INC., SHALL NOT BE RESPONSIBLE FOR ANY DEVIATION FROM THIS DESIGN; ANY FAILURE TO BUILD THE TRUSS IN CONFORMANCE WITH TPI; OR FABRICATING, HANDLING, SHIPPING, INSTALLING & BRACING OF TRUSSES. DESIGN CONFORMS WITH APPLICABLE PROVISIONS OF NDS (NATIONAL DESIGN SPEC, BY AF&PA) AND TPI. ALPINE CONNECTOR PLATES ARE MADE OF 20/18/16GA (W,H/S/M) ASTM A653 GRADE 40/60 (W,H/H,S) GALV. STEEL. APPLY PLATES TO EACH FACE OF TRUSS AND, UNLESS OTHERWISE LOCATED ON THIS DESIGN, POSITION PER DRAWINGS 160A-Z. ANY INSPECTION OF PLATES FOLLOWED BY (1) SHALL BE PER ANNEX A3 OF TPI 1-2002 SEC. 3. A SEAL ON THIS DRAWING INDICATES ACCEPTANCE OF PROFESSIONAL ENGINEERING RESPONSIBILITY SOLELY FOR THE TRUSS COMPONENT DESIGN SHOWN. THE SUITABILITY AND USE OF THIS COMPONENT FOR ANY BUILDING IS THE RESPONSIBILITY OF THE BUILDING DESIGNER, PER ANSI/TPI 1 SEC. 2.

Morris R. Shoshoua, P.E.
MAURICE R. SHOSHOUA, P.E., INC
1908 NW 112 AVE.
CORAL SPRINGS, FL. 33071
(954) 753-1988
LICENSE Nos.ER525; & 18054

TC LL	30.0psf	REF	
TC DL	15.0psf	DATE	04-02
BC DL	10.0psf	DRWG	
BC LL	0.0psf		JA
TOT.LD.	55.0psf	O/A LEN.	71000
DUR.FAC.	1.33	JOB #:	20090173
SPACING	24.0"	TYPE	EJACK

Job: (20090173) -JOE HART BUILDER INC. -ADDTION / EJ6

THIS DWG. PREPARED BY THE ALPINE JOB DESIGNER PROGRAM FROM TRUSS MFR'S LAYOUT

Top chord 2x4 SP #2
Bot chord 2x4 SP #2
Webs 2x6 SP #2 Dense :W2 2x4 SP #3:
:Lt Level Return 2x4 SP #3:

Left end vertical not exposed to wind pressure.

Bottom chord checked for 10.00 psf non-concurrent live load.

Deflection meets L/240 live and L/180 total load.

Calculated vertical deflection is -0.10" due to live load at X = 1-9-6 and -0.12" due to total load at X = 1-9-6. L/240 live and L/180 total load.

140 mph wind, 15.00 ft mean hgt, ASCE 7-02, CLOSED [illegible] located anywhere [illegible] roof, CAT II, EXP C, wind TC DL=5.0 psf, wind BC DL=5.0 psf. [illegible]-1.00 GCpi(+/-)=0.18

Component and cladding wind pressures considered for uplift reactions.

(J) hanger connection not found in inventory file for this condition. Provide connection.

Calculated vertical deflection is -0.04" due to live load and -0.07" due to total load at X = 3-9-3.

All wind load cases on this truss have a 1.32 duration factor.

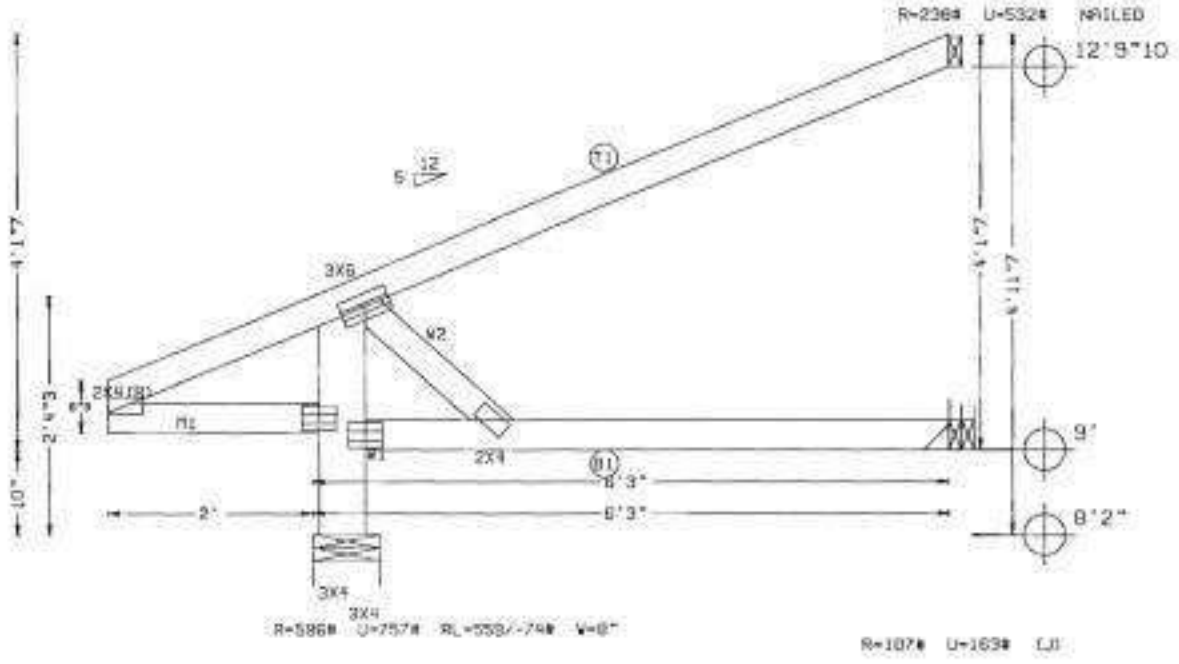

APPROVED
APR 13 2009
CITY OF HOLLYWOOD, FLA.
STRUCTURE

TAG = T36
PLT. TYP.-WAVE

DESIGN CRIT=FBC2004/HVHZ/TPI-2002 FT/RT=20(10)/10.00

QTY= 14 TOTAL= 14

REV. 8.07.00.1218.

SEQ = 202058
SCALE =0.5400

Custom Designed Truss Co.
777 S.W. 12th Avenue
Pompano Beach FL 33069
Phone 954-786-8500
Fax 954-786-8804

WARNING TRUSSES REQUIRE EXTREME CARE IN FABRICATING, HANDLING, SHIPPING, INSTALLING AND BRACING. REFER TO BCSI 1-03 (BUILDING COMPONENT SAFETY INFORMATION), PUBLISHED BY TPI (TRUSS PLATE INSTITUTE, 583 D'ONOFRIO DR., SUITE 200, MADISON, WI 53718) AND WTCA (WOOD TRUSS COUNCIL OF AMERICA, 6300 ENTERPRISE LN, MADISON, WI 53718) FOR SAFETY PRACTICES PRIOR TO PERFORMING THESE FUNCTIONS. UNLESS OTHERWISE INDICATED, TOP CHORD SHALL HAVE PROPERLY ATTACHED STRUCTURAL PANELS AND BOTTOM CHORD SHALL HAVE A PROPERLY ATTACHED RIGID CEILING.
IMPORTANT FURNISH COPY OF THIS DESIGN TO INSTALLATION CONTRACTOR. ALPINE ENGINEERED PRODUCTS, INC., SHALL NOT BE RESPONSIBLE FOR ANY DEVIATION FROM THIS DESIGN; ANY FAILURE TO BUILD THE TRUSS IN CONFORMANCE WITH TPI; OR FABRICATING, HANDLING, SHIPPING, INSTALLING & BRACING OF TRUSSES. DESIGN CONFORMS WITH APPLICABLE PROVISIONS OF NDS (NATIONAL DESIGN SPEC. BY AF&PA) AND TPI. ALPINE CONNECTOR PLATES ARE MADE OF 20/18/16GA (W,H/S/K) ASTM A653 GRADE 40/60 (W,K/H,S) GALV. STEEL. APPLY PLATES TO EACH FACE OF TRUSS AND, UNLESS OTHERWISE LOCATED ON THIS DESIGN, POSITION PER DRAWINGS 160A-Z. ANY INSPECTION OF PLATES FOLLOWED BY (1) SHALL BE PER ANNEX A3 OF TPI 1-2002 SEC. 3. A SEAL ON THIS DRAWING INDICATES ACCEPTANCE OF PROFESSIONAL ENGINEERING RESPONSIBILITY SOLELY FOR THE TRUSS COMPONENT DESIGN SHOWN. THE SUITABILITY AND USE OF THIS COMPONENT FOR ANY BUILDING IS THE RESPONSIBILITY OF THE BUILDING DESIGNER, PER ANSI/TPI 1 SEC. 2.

Morris A. Shoshoua, P.E.
PRINCE A. SHASHOUA, P.E., INC
1909 NW 112 AVE.
CORAL SPRINGS, FL. 33071
(954) 753-1988
LICENSE Nos.285251 & 19554

TC LL	30.0psf	REF	
TC DL	15.0psf	DATE	04-02-2009
BC DL	10.0psf	DRWG	
BC LL	0.0psf		JA
TOT.LD.	55.0psf	O/A LEN.	60300
DUR.FAC.	1.33	JOB #:	20090173
SPACING	24.0"	TYPE	MONO

Job:(20090173) -JOE HART BUILDER INC. -ADDTION / EJ7

THIS DWG. PREPARED BY THE ALPINE JOB DESIGNER PROGRAM FROM TRUSS MFR'S LAYOUT

Top chord 2x6 SP #2 Dense
Bot chord 2x4 SP #2
Webs 2x6 SP #2 Dense :W2 2x4 SP #3:
:Lt Level Return 2x4 SP #2:

Left end vertical not exposed to wind pressure.

Bottom chord checked for 10.00 psf non-concurrent live load.

Deflection meets L/240 live and L/180 total load.

***** BEARING ANALOG MODIFIED! *****

All wind load cases on this truss have a 1.33 duration factor.

** The maximum horizontal reaction is 238# **

140 mph wind, 15.00 ft mean hgt, ASCE 7-02, CLOSED bldg, not located [illegible] ft from roof edge, CAT II, EXP C, wind TC DL=5.0 psf, [illegible] Iw=1.00 GCpi(+/-)=0.18

Component and cladding wind pressures considered for uplift reactions.

Calculated vertical deflection is 0.01" due to live load and 0.01" due to total load at X = 1-9-6.

Calculated vertical deflection is 0.01" due to live load at X = 1-9-6 and 0.01" due to total load at X = 1-9-6. L/240 live and L/180 total load.

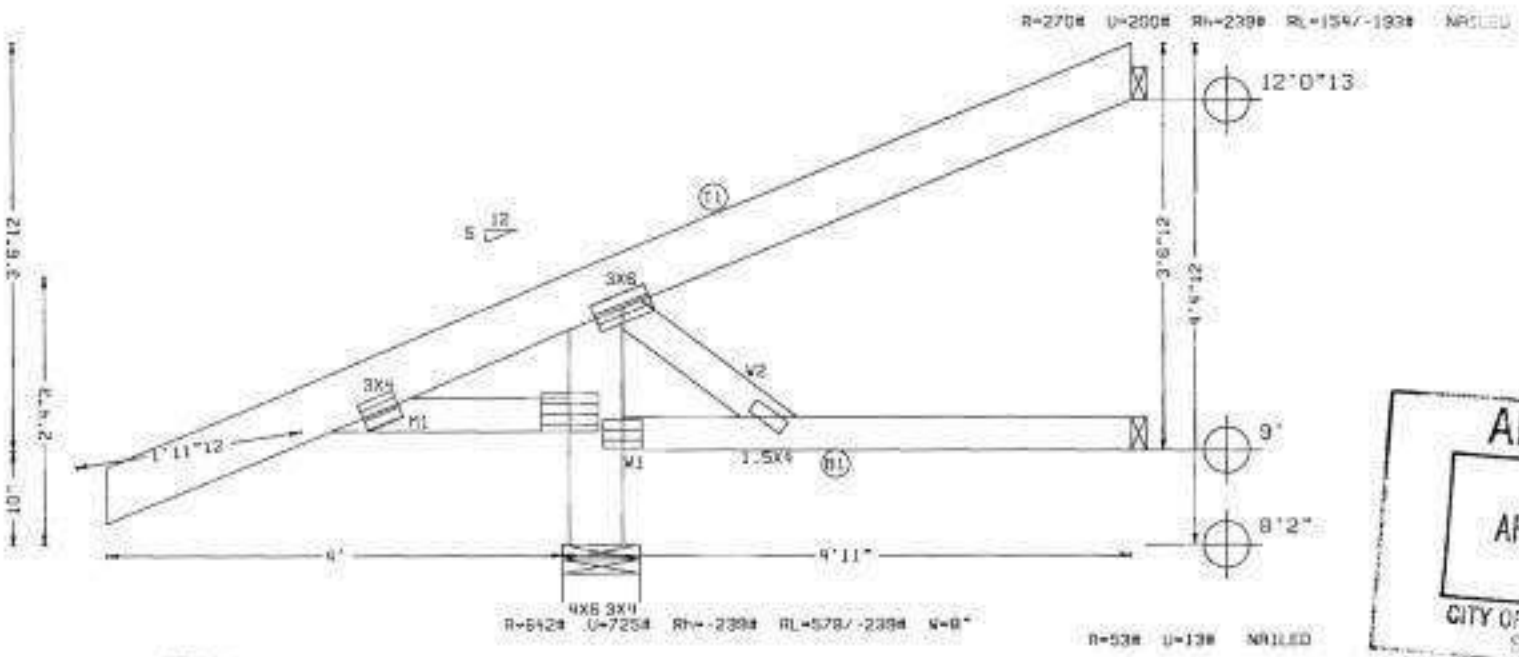

APPROVED
APR 13 2009
CITY OF HOLLYWOOD, FLA.

TAG = T6
PLT. TYP.-WAVE

DESIGN CRIT=FBC2004AWC/TPI-2002 FT/RT=20/10/0/10:03

DTY= 11 TOTAL= 11

REV. 6.07.00.1218.1 SEQ = 203537 SCALE =0.6082

Custom Designed Truss Co.
777 S.W. 12th Avenue
Pompano Beach, FL 33069
Phone 954.786.8800
Fax 954-786-8804

WARNING TRUSSES REQUIRE EXTREME CARE IN FABRICATING, HANDLING, SHIPPING, INSTALLING AND BRACING. REFER TO BCSI 1-03 (BUILDING COMPONENT SAFETY INFORMATION), PUBLISHED BY TPI (TRUSS PLATE INSTITUTE, 583 D'ONOFRIO DR., SUITE 200, MADISON, WI 53719) AND WTCA (WOOD TRUSS COUNCIL OF AMERICA, 6300 ENTERPRISE LN, MADISON, WI 53719) FOR SAFETY PRACTICES PRIOR TO PERFORMING THESE FUNCTIONS. UNLESS OTHERWISE INDICATED, TOP CHORD SHALL HAVE PROPERLY ATTACHED STRUCTURAL PANELS AND BOTTOM CHORD SHALL HAVE A PROPERLY ATTACHED RIGID CEILING.
IMPORTANT FURNISH COPY OF THIS DESIGN TO INSTALLATION CONTRACTOR. ALPINE ENGINEERED PRODUCTS, INC., SHALL NOT BE RESPONSIBLE FOR ANY DEVIATION FROM THIS DESIGN; ANY FAILURE TO BUILD THE TRUSS IN CONFORMANCE WITH TPI; OR FABRICATING, HANDLING, SHIPPING, INSTALLING & BRACING OF TRUSSES. DESIGN CONFORMS WITH APPLICABLE PROVISIONS OF NDS (NATIONAL DESIGN SPEC. BY AF&PA) AND TPI. ALPINE CONNECTOR PLATES ARE MADE OF 20/18/16GA (W,H/S/K) ASTM A653 GRADE 40/60 (W,K/H,S) GALV. STEEL. APPLY PLATES TO EACH FACE OF TRUSS AND, UNLESS OTHERWISE LOCATED ON THIS DESIGN, POSITION PER DRAWINGS 16DR-2. ANY INSPECTION OF PLATES FOLLOWED BY (1) SHALL BE PER ANNEX A3 OF TPI 1-2002 SEC. 3. A SEAL ON THIS DRAWING INDICATES ACCEPTANCE OF PROFESSIONAL ENGINEERING RESPONSIBILITY SOLELY FOR THE TRUSS COMPONENT DESIGN SHOWN. THE SUITABILITY AND USE OF THIS COMPONENT FOR ANY BUILDING IS THE RESPONSIBILITY OF THE BUILDING DESIGNER, PER ANSI/TPI 1 SEC. 2.

Morris A. Shashoua, P.E.
MAURICE A. SHASHOUA, P.E., INC
1906 NW 112 AVE.
CORAL SPRINGS, FL. 33071
(954) 753-1888
LICENSE Nos.E85251 & 13554

TC LL	30.0psf	REF	
TC DL	15.0psf	DATE	04-02-2009
BC DL	10.0psf	DRWG	
BC LL	0.0psf		JA
TOT.LD.	55.0psf	O/A LEN.	41100
DUR.FAC.	1.33	JOB #:	20090173
SPACING	.0"	TYPE	EJAC

Job: (20090173) -JOE HART BUILDER INC. -ADDTION / HJ10A

THIS DWG. PREPARED BY THE ALPINE JOB DESIGNER PROGRAM FROM TRUSS MFR'S LAYOUT

Top chord 2x4 SP SS :T2 2x4 SP #2:
Bot chord 2x4 SP #2
Webs 2x4 SP #3 :W1 2x6 SP #2 Dense:

End verticals not exposed to wind pressure.

Calculated vertical deflection is 0.02" due to live load and 0.06" due to total load at X = 9-2-12.

Calculated vertical deflection is 0.02" due to live load at X = 6-10-4 and 0.03" due to total load at X = 6-10-4. L/240 live and L/180 total load.

Top chord overhangs have been checked only for loads as indicated. Overhangs not checked for man loads or long-term deflection.

140 mph wind, 15.00 ft mean hgt, ASCE 7-02, CLOSED bldg, Located on [illegible] roof, CAT II, EXP C, wind TC DL=5.0 psf, wind BC DL=5.0 psf. Iw=1.00 GCpi(+/-)=0.18

Wind reactions based on MWFRS pressures.

Hipjack supports 7-9-8 setback jacks. Jacks up to 7' have no webs. Longer jacks supported to BC.

Deflection meets L/240 live and L/180 total load.

** WARNING! Overhang deflections excessive ** Truss has vertical deflection on overhang of 0.51" due to live load at X = -4-4-1. Creep increase factor for dead load is 1.00.

All wind load cases on this truss have a 1.33 duration factor.

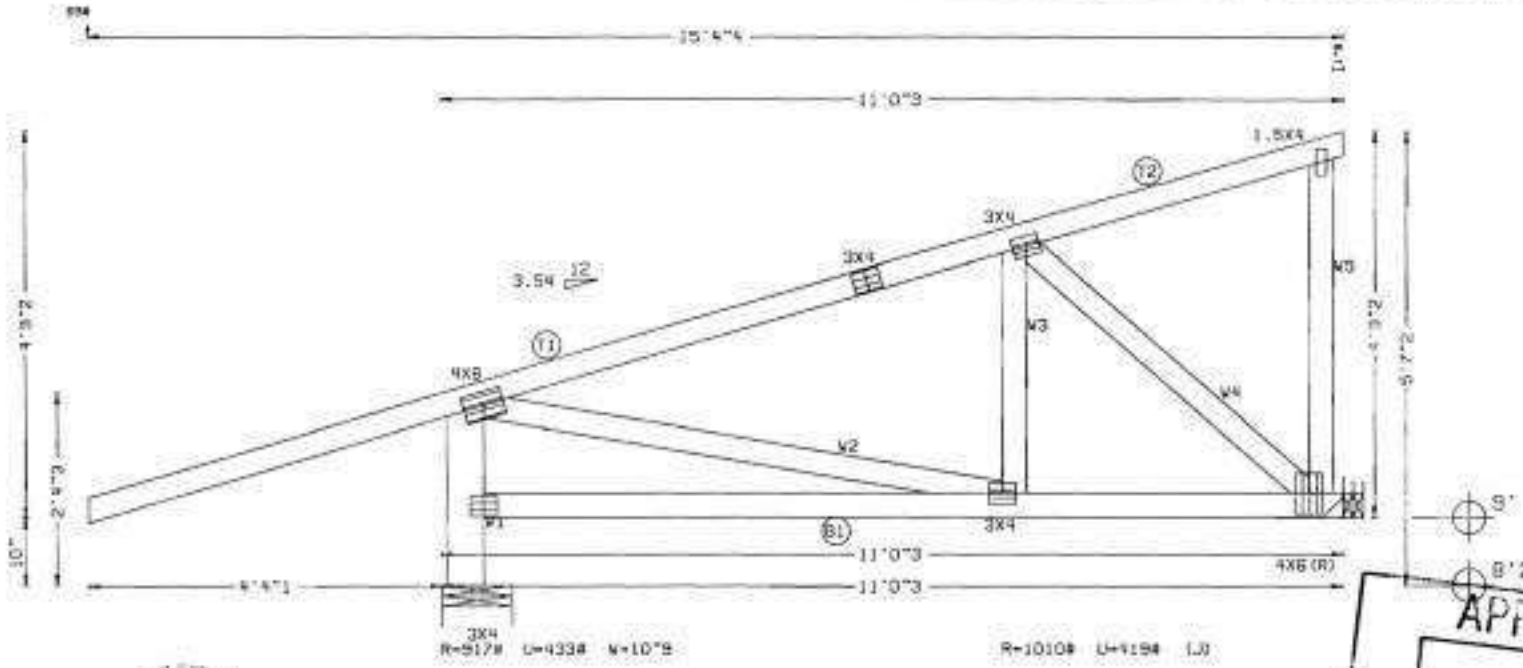

APPROVED
APR 13 2009
CITY OF HOLLYWOOD, FLA.

TAG = T4
PLT. TYP.-WAVE

DESIGN CRIT=FBC2004+WH2/TPI-2002 FT/RT=20%(0%)/10(0)

QTY= 1 TOTAL= 1

REV. 8.07.00.1218.

SEQ = 201965
SCALE =0.4323

Custom Designed Truss Co.
777 S.W. 12th Avenue
Pompano Beach, FL 33069
Phone 954-786-8800
Fax 954-785-8804

WARNING TRUSSES REQUIRE EXTREME CARE IN FABRICATING, HANDLING, SHIPPING, INSTALLING AND BRACING. REFER TO BCSI 1-03 (BUILDING COMPONENT SAFETY INFORMATION), PUBLISHED BY TPI (TRUSS PLATE INSTITUTE, 583 D'ONOFRIO DR., SUITE 200, MADISON, WI. 53719) AND WTCA (WOOD TRUSS COUNCIL OF AMERICA, 6300 ENTERPRISE LN, MADISON, WI 53719) FOR SAFETY PRACTICES PRIOR TO PERFORMING THESE FUNCTIONS. UNLESS OTHERWISE INDICATED, TOP CHORD SHALL HAVE PROPERLY ATTACHED STRUCTURAL PANELS AND BOTTOM CHORD SHALL HAVE A PROPERLY ATTACHED RIGID CEILING.
IMPORTANT FURNISH COPY OF THIS DESIGN TO INSTALLATION CONTRACTOR. ALPINE ENGINEERED PRODUCTS, INC., SHALL NOT BE RESPONSIBLE FOR ANY DEVIATION FROM THIS DESIGN: ANY FAILURE TO BUILD THE TRUSS IN CONFORMANCE WITH TPI1 OR FABRICATING, HANDLING, SHIPPING, INSTALLING & BRACING OF TRUSSES. DESIGN CONFORMS WITH APPLICABLE PROVISIONS OF NDS (NATIONAL DESIGN SPEC. BY AF&PA) AND TPI. ALPINE CONNECTOR PLATES ARE MADE OF 20/18/16GA (W,H/S/K) ASTM A653 GRADE 40/80 (W,K/H,S) ONLY. STEEL. APPLY PLATES TO EACH FACE OF TRUSS AND, UNLESS OTHERWISE LOCATED ON THIS DESIGN, POSITION PER DRAWINGS 16DA-2. ANY INSPECTION OF PLATES FOLLOWED BY (I) SHALL BE PER ANNEX A3 OF TPI 1-2002 SEC. 3. A SEAL ON THIS DRAWING INDICATES ACCEPTANCE OF PROFESSIONAL ENGINEERING RESPONSIBILITY SOLELY FOR THE TRUSS COMPONENT DESIGN SHOWN. THE SUITABILITY AND USE OF THIS COMPONENT FOR ANY BUILDING IS THE RESPONSIBILITY OF THE BUILDING DESIGNER, PER ANSI/TPI 1 SEC. 2.

Morris A. Shashoua, P.E.
MAURICE A. SHASHOUA, P.E., INC
1808 NW 112 AVE.
CORAL SPRINGS, FL. 33071
(954) 753-1988
LICENSE Nos.E85251 & 18654

TC LL	30.0psf	REF	
TC DL	15.0psf	DATE	04-02-2009
BC DL	10.0psf	[illegible]	
BC LL	0.0psf		JA
TOT.LG.	55.0psf	O/A LEN.	110003
DUR.FAC.	1.33	JOB #:	20090173
SPACING	24.0"	TYPE	HIP_JACK

Job:(20090173) -JOE HART BUILDER INC. -ADDTION / HJ10

THIS DWG. PREPARED BY THE ALPINE JOB DESIGNER PROGRAM FROM TRUSS MFR'S LAYOUT

Top chord 2x4 SP #2
Bot chord 2x4 SP #2
Webs 2x4 SP #3 :W1 2x6 SP #2 Dense!
:Lt Level Return 2x4 SP #3:

End verticals not exposed to wind pressure.

Calculated vertical deflection is 0.02" due to live load and 0.06" due to total load at X = 9-2-12.

Calculated vertical deflection is 0.02" due to live load at X = 6-10-4 and 0.04" due to total load at X = 6-10-4, L/240 live and L/180 total load.

140 mph wind, 15.00 ft mean hgt, ASCE 7-02, CLOSED bldg, Located anywhere in roof, CAT II, EXP C, wind TC DL=5.0 psf, wind BC DL=5.0 psf. Iw=1.00 GCpi(+/-)=0.18

Wind reactions based on MWFRS pressures.

Hipjack supports 7-9-8 setback jacks. Jacks up to 7' have [illegible] supported to BC.

Deflection meets L/240 live and L/180 total load.

All wind load cases on this truss have a 1.33 duration factor.

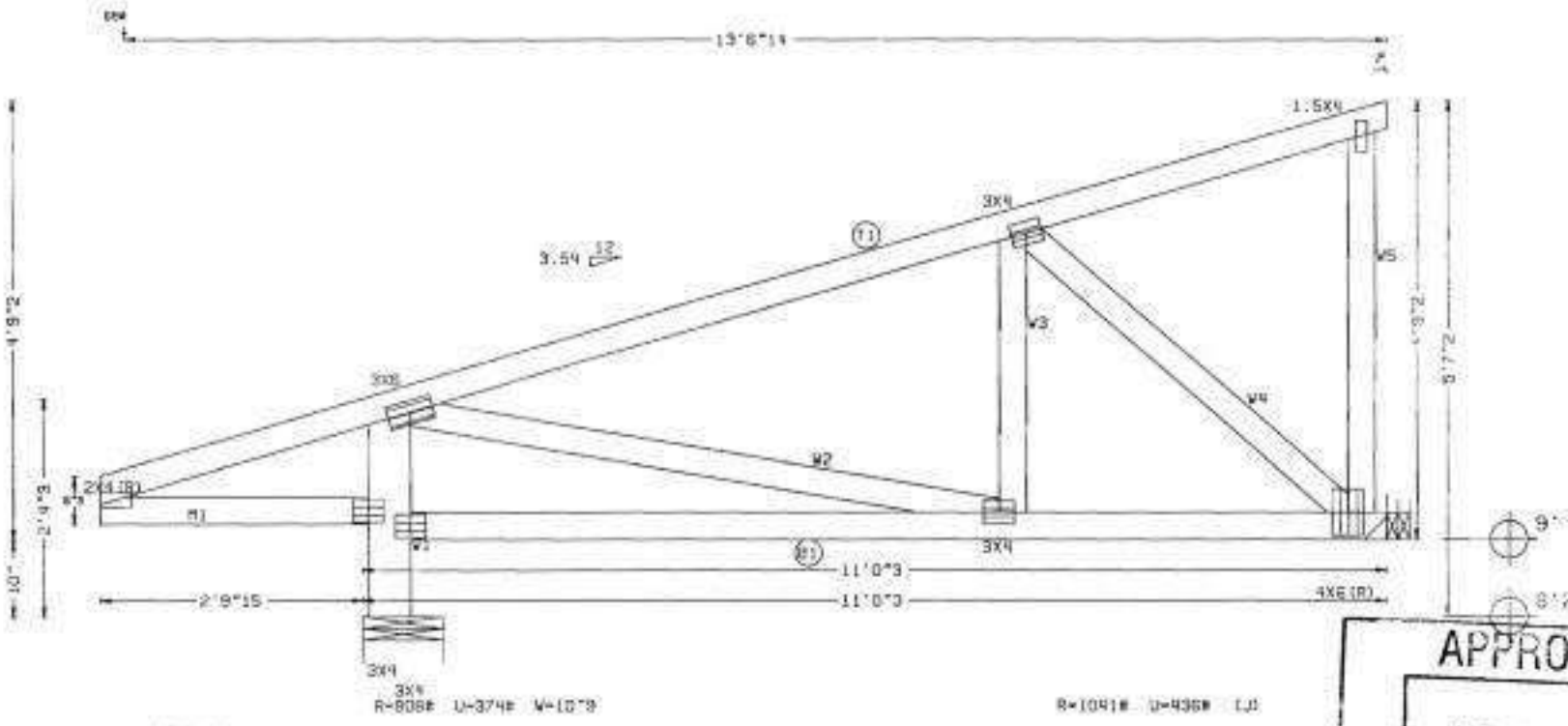

APPROVED
APR 13 2009
CITY OF HOLLYWOOD, FLA.
STRUCTURAL

TAG = T2
PLT. TYP.-WAVE

DESIGN CRIT-FBC2004HVHZ/TPI-2002 FT/RT=20/(0ft)/10(0)

QTY= 1 TOTAL= 1

REV. 8.07.00.1218

SEQ = 202[illegible]

Contam Designed Truss Co.
777 S.W. 12th Avenue
Pompano Beach FL 33060
Phone: 954-786-8800
Fax: 954-786-0804

WARNING TRUSSES REQUIRE EXTREME CARE IN FABRICATING, HANDLING, SHIPPING, INSTALLING AND BRACING. REFER TO BCSI 1-03 (BUILDING COMPONENT SAFETY INFORMATION), PUBLISHED BY TPI (TRUSS PLATE INSTITUTE, 583 O'ONOFRIO DR., SUITE 200, MADISON, WI. 53719) AND WTCA (WOOD TRUSS COUNCIL OF AMERICA, 6300 ENTERPRISE LN, MADISON, WI 53719) FOR SAFETY PRACTICES PRIOR TO PERFORMING THESE FUNCTIONS. UNLESS OTHERWISE INDICATED, TOP CHORD SHALL HAVE PROPERLY ATTACHED STRUCTURAL PANELS AND BOTTOM CHORD SHALL HAVE A PROPERLY ATTACHED RIGID CEILING.
IMPORTANT FURNISH COPY OF THIS DESIGN TO INSTALLATION CONTRACTOR. ALPINE ENGINEERED PRODUCTS, INC. SHALL NOT BE RESPONSIBLE FOR ANY DEVIATION FROM THIS DESIGN; ANY FAILURE TO BUILD THE TRUSS IN CONFORMANCE WITH TPI1 OR FABRICATING, HANDLING, SHIPPING, INSTALLING & BRACING OF TRUSSES. DESIGN CONFORMS WITH APPLICABLE PROVISIONS OF NDS (NATIONAL DESIGN SPEC. BY AF&PA) AND TPI. ALPINE CONNECTOR PLATES ARE MADE OF 20/18/16GA (W,H/S/K) ASTM A653 GRADE 40/60 (W,K/H,S) GALV. STEEL. APPLY PLATES TO EACH FACE OF TRUSS AND, UNLESS OTHERWISE LOCATED ON THIS DESIGN, POSITION PER DRAWINGS 160A-Z. ANY INSPECTION OF PLATES FOLLOWED BY (I) SHALL BE PER ANNEX A3 OF TPI 1-2002 SEC. 3. A SEAL ON THIS DRAWING INDICATES ACCEPTANCE OF PROFESSIONAL ENGINEERING RESPONSIBILITY SOLELY FOR THE TRUSS COMPONENT DESIGN SHOWN. THE SUITABILITY AND USE OF THIS COMPONENT FOR ANY BUILDING IS THE RESPONSIBILITY OF THE BUILDING DESIGNER, PER ANSI/TPI 1 SEC. 2.

Morris A. Shashoua, P.E.
MAURICE A. SHASHOUA, P.E., INC
1908 NW 112 AVE.
CORAL SPRINGS, FL. 33071
(954) 783-1988
LICENSE Nos.E85251 & 18554

TC LL	30.0psf	REF	
TC DL	15.0psf	DATE	04-02-200[illegible]
BC DL	10.0psf	DRWG	
BC LL	0.0psf		JR
TOT.LD.	55.0psf	O/A LEN.	[illegible]
DUR.FAC.	1.33	JOB #:	20090173
SPACING	24.0"	TYPE	HIP_JACK

Job: (20090173) -JOE HART BUILDER INC. -ADDTION / J9A

THIS DWG. PREPARED BY THE ALPINE JOB DESIGNER PROGRAM FROM TRUSS MFR'S LAYOUT

Top chord 2x4 SP #2
Bot chord 2x4 SP #2
Webs 2x6 SP #2 Dense :W2 2x4 SP #3:

Left end vertical not exposed to wind pressure.

Calculated horizontal deflection is 0.22" due to live load and 0.06" due to dead load.

Calculated vertical deflection is -0.06" due to live load and -0.11" due to total load at X = 4-0-3.

All wind load cases on this truss have a 1.33 duration factor.

140 mph wind, 15.00 ft mean hgt, ASCE 7-02, CLOSED bldg, Located anywhere in roof, CAT II, EXP C, wind TC DL=5.0 psf, wind BC DL=5.0 psf, Iw=1.00 GCpi(+/-)=0.18

Component and cladding wind pressures considered for uplift reactions.

Roof overhang/cantilever supports 2.00 psf soffit load.

Bottom chord checked for 10.00 psf non-concurrent live load.

Deflection meets L/240 live and L/180 total load.

Calculated vertical deflection is -0.13" due to live load at X = 1-9-6 -0.17" due to total load at X = 1-9-6. L/240 live and L/180 total load.

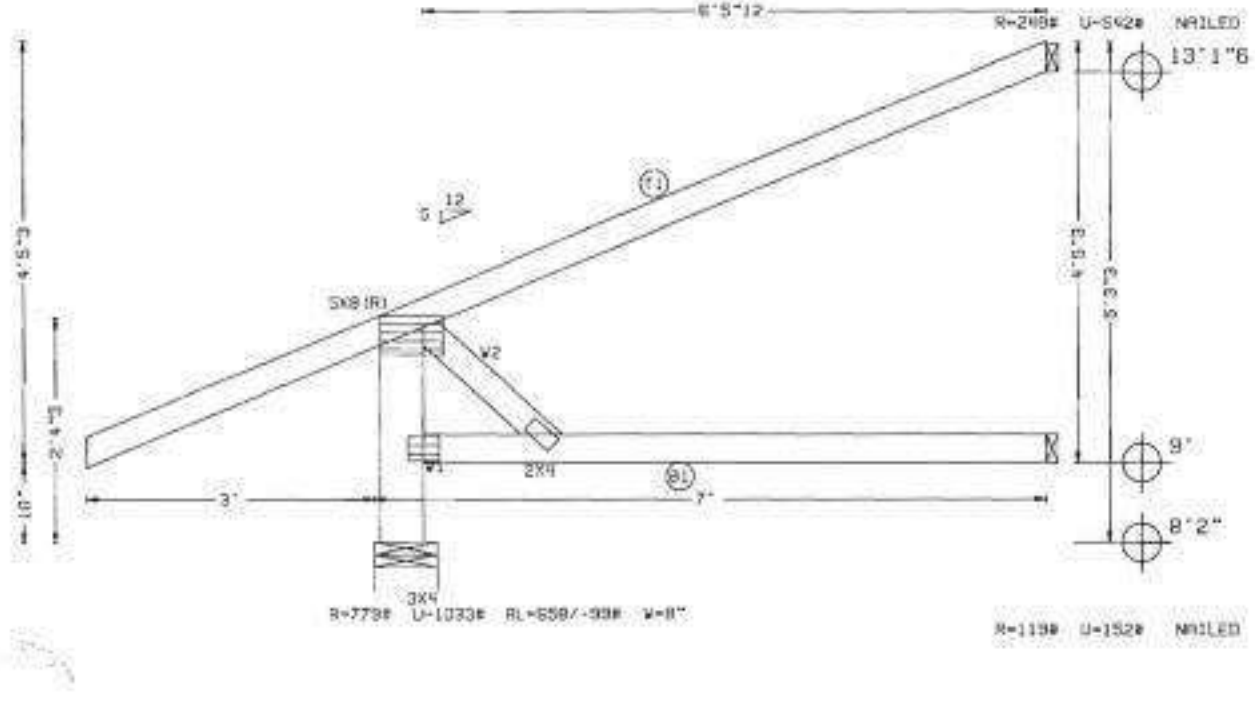

APPROVED
APR 13 2009
CITY OF HOLLYWOOD, FLA.
STRUCTURAL

TAG = T9
PLT. TYP. -WAVE

DESIGN CRIT-FBC2004HVHZ/TPI-2002 FT/RT=20X(0.0)/10(0)

QTY= 2 TOTAL= 2

REV. 8.07.00.1218. SEQ = 201477 SCALE =0.5079

Custom Designed Trans Co.
777 S.W. 12th Avenue
Pompano Beach, FL 33069
Phone 954-786-8800
Fax 954-786-8804

WARNING TRUSSES REQUIRE EXTREME CARE IN FABRICATING, HANDLING, SHIPPING, INSTALLING AND BRACING. REFER TO BCSI 1-03 (BUILDING COMPONENT SAFETY INFORMATION), PUBLISHED BY TPI (TRUSS PLATE INSTITUTE, 583 D'ONOFRIO DR., SUITE 200, MADISON, WI 53718) AND WTCH (WOOD TRUSS COUNCIL OF AMERICA, 6300 ENTERPRISE LN, MADISON, WI 53719) FOR SAFETY PRACTICES PRIOR TO PERFORMING THESE FUNCTIONS. UNLESS OTHERWISE INDICATED, TOP CHORD SHALL HAVE PROPERLY ATTACHED STRUCTURAL PANELS AND BOTTOM CHORD SHALL HAVE A PROPERLY ATTACHED RIGID CEILING.

IMPORTANT FURNISH COPY OF THIS DESIGN TO INSTALLATION CONTRACTOR. ALPINE ENGINEERED PRODUCTS, INC., SHALL NOT BE RESPONSIBLE FOR ANY DEVIATION FROM THIS DESIGN; ANY FAILURE TO BUILD THE TRUSS IN CONFORMANCE WITH TPI; OR FABRICATING, HANDLING, SHIPPING, INSTALLING & BRACING OF TRUSSES. DESIGN CONFORMS WITH APPLICABLE PROVISIONS OF NDS NATIONAL DESIGN SPEC, BY AF&PA AND TPI. ALPINE CONNECTOR PLATES ARE MADE OF 20/18/16GA (W,H/S/K) ASTM A653 GRADE 40/60 (W,K/H,S) GALV. STEEL. APPLY PLATES TO EACH FACE OF TRUSS AND, UNLESS OTHERWISE LOCATED ON THIS DESIGN, POSITION PER DRAWINGS 16DA-2. ANY INSPECTION OF PLATES FOLLOWED BY (I) SHALL BE PER ANNEX A3 OF TPI 1-2002 SEC. 3. A SEAL ON THIS DRAWING INDICATES ACCEPTANCE OF PROFESSIONAL ENGINEERING RESPONSIBILITY SOLELY FOR THE TRUSS COMPONENT DESIGN SHOWN. THE SUITABILITY AND USE OF THIS COMPONENT FOR ANY BUILDING IS THE RESPONSIBILITY OF THE BUILDING DESIGNER, PER ANSI/TPI 1 SEC. 2.

Morris A. Shashoua, P.E.
MAURICE A. SHASHOUA, P.E., INC
1908 NW 112 AVE.
CORAL SPRINGS, FL. 33071
(954) 753-1988
LICENSE Nos.E05251 & 19554

TC LL	30.0psf	REF	
TC DL	15.0psf	DATE	04-02-2009
BC DL	10.0psf	DRWG	
BC LL	0.0psf		JA
TOT.LD.	55.0psf	O/A LEN.	7
DUR.FAC.	1.33	JOB #:	20090173
SPACING	24.0"	TYPE	

Job: (20090173) -JOE HART BUILDER INC. -ADDTION / J9

THIS DWG. PREPARED BY THE ALPINE JOB DESIGNER PROGRAM FROM TRUSS MFR'S LAYOUT

Top chord 2x4 SP #2
Bot chord 2x4 SP #2
Webs 2x6 SP #2 Dense :W2 2x4 SP #3:
:Lt Level Return 2x4 SP #3:

Left end vertical not exposed to wind pressure.

Bottom chord checked for 10.00 psf non-concurrent live load.

Deflection meets L/240 live and L/180 total load.

Calculated vertical deflection is -0.14" due to live load at X = 1-9-6 and -0.17" due to total load at X = 1-9-6. L/240 live and L/180 total load.

All wind load cases on this truss have a 1.33 duration factor.

140 mph wind, 15.00 ft mean hgt, ASCE 7-02, CLOSED bldg, Located anywhere in roof, CAT II, EXP C, wind TC DL=5.0 psf, wind BC DL=5.0 psf, [illegible]=1.00 GCpi(+/-)=0.18

Component and cladding wind pressures considered for uplift reactions.

Calculated horizontal deflection is 0.23" due to live load and 0.06" [illegible] load.

Calculated vertical deflection is 0.06" due to live load and 0.12" due to total load at X = 4-3-3.

** WARNING! Overhang deflections excessive ** Truss has vertical defl[illegible] overhang of 0.21" due to live load and 0.05" due to dead load at X = -1-11-[illegible] Creep increase factor for dead load is 1.00.

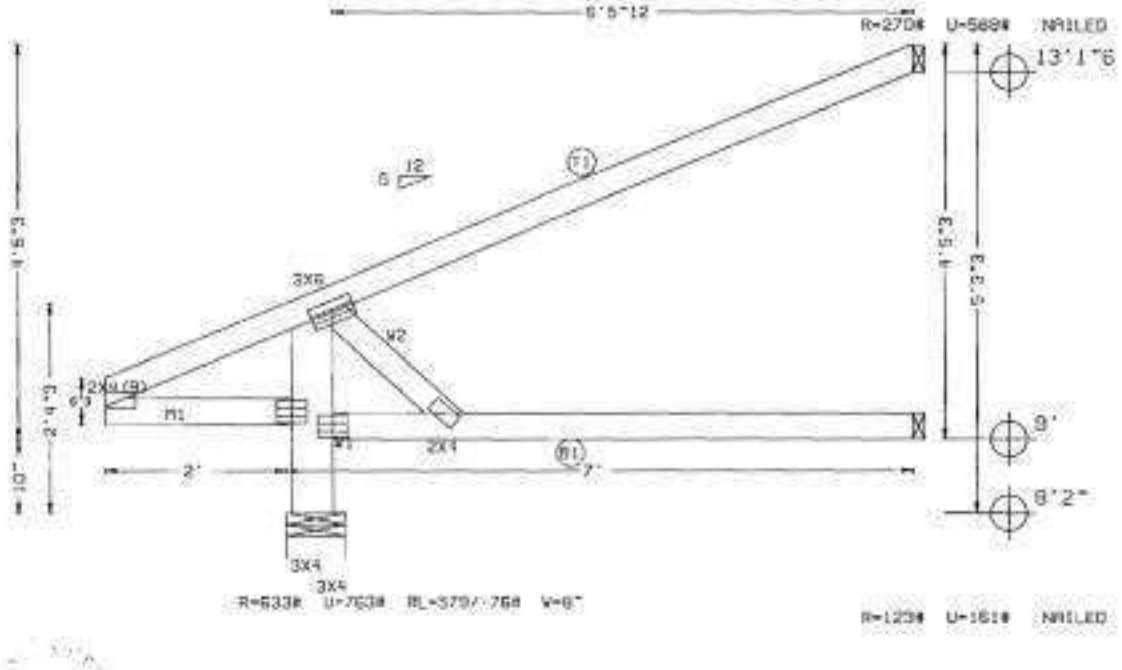

APPROVED
APR 13 2009
CITY OF HOLLYWOOD, FLA.
STRUCTURAL

TAG = T14
PLT. TYP.-WAVE

DESIGN CRIT=FBC2004HVHZ/TPI-2002 F1/47-20F(DF)/10(0)

QTY= 2 TOTAL= 2

REV. 8.07.00.1218. SEQ = 202082 SCALE =0 5

Custom Designed Trusses Co.
777 S.W. 12th Avenue
Pompano Beach FL 33069
Phone 954.786.8600
Fax 954.786.0804

WARNING TRUSSES REQUIRE EXTREME CARE IN FABRICATING, HANDLING, SHIPPING, INSTALLING AND BRACING. REFER TO BCSI 1-03 (BUILDING COMPONENT SAFETY INFORMATION), PUBLISHED BY TPI (TRUSS PLATE INSTITUTE, 583 D'ONOFRIO DR., SUITE 200, MADISON, WI. 53719) AND WTCA (WOOD TRUSS COUNCIL OF AMERICA, 6300 ENTERPRISE LN, MADISON, WI 53719) FOR SAFETY PRACTICES PRIOR TO PERFORMING THESE FUNCTIONS. UNLESS OTHERWISE INDICATED, TOP CHORD SHALL HAVE PROPERLY ATTACHED STRUCTURAL PANELS AND BOTTOM CHORD SHALL HAVE A PROPERLY ATTACHED RIGID CEILING.
IMPORTANT FURNISH COPY OF THIS DESIGN TO INSTALLATION CONTRACTOR. ALPINE ENGINEERED PRODUCTS, INC., SHALL NOT BE RESPONSIBLE FOR ANY DEVIATION FROM THIS DESIGN; ANY FAILURE TO BUILD THE TRUSS IN CONFORMANCE WITH TPI; OR FABRICATING, HANDLING, SHIPPING, INSTALLING & BRACING OF TRUSSES. DESIGN CONFORMS WITH APPLICABLE PROVISIONS OF NDS (NATIONAL DESIGN SPEC, BY AF&PA) AND TPI. ALPINE CONNECTOR PLATES ARE MADE OF 20/18/16GA (W,H/S/K) ASTM A653 GRADE 40/60 (W,H/H,S) GALV. STEEL. APPLY PLATES TO EACH FACE OF TRUSS AND, UNLESS OTHERWISE LOCATED ON THIS DESIGN, POSITION PER DRAWINGS 180A-Z. ANY INSPECTION OF PLATES FOLLOWED BY (1) SHALL BE PER ANNEX A3 OF TPI 1-2002 SEC. 3. A SEAL ON THIS DRAWING INDICATES ACCEPTANCE OF PROFESSIONAL ENGINEERING RESPONSIBILITY SOLELY FOR THE TRUSS COMPONENT DESIGN SHOWN. THE SUITABILITY AND USE OF THIS COMPONENT FOR ANY BUILDING IS THE RESPONSIBILITY OF THE BUILDING DESIGNER, PER ANSI/TPI 1 SEC. 2.

Marcie A. Shashoua, P.E.
MARCIE A. SHASHOUA, P.E., INC
1908 NW 112 AVE.
CORAL SPRINGS, FL. 33071
(954) 753-1988
LICENSE Nos.E85251 & 19554

TC LL	30.0psf	REF	
TC DL	15.0psf	DATE	04-02-2009
BC DL	10.0psf	DRWG	
BC LL	0.0psf		JA
TOT.LD.	55.0psf	C	N. 7
DUR.FAC.	1.33	JOB #:	20090173
SPACING	24.0"	TYPE	JACK

Job: (20090173) -JOE HART BUILDER INC. -ADDTION / HJ7

THIS DWG. PREPARED BY THE ALPINE JOB DESIGNER PROGRAM FROM TRUSS MFR'S LAYOUT

Top chord 2x4 SP #2
Bot chord 2x4 SP #2
Webs 2x4 SP #3 :W1 2x6 SP #2 Dense:
:Lt Level Return 2x4 SP #3:

Left end vertical not exposed to wind pressure.

Calculated vertical deflection is 0.08" due to live load and 0.15" due to total load of X = 4-1-12.

All wind load cases on this truss have a 1.33 duration factor.

140 mph wind, 15.00 ft mean hgt, ASCE 7-02, CLOSED bldg, Located anywhere in roof, CAT II, EXP C, wind TC DL=5.0 psf, wind BC DL=5.0 psf, Iw=1.00 GCpi(+/-)=0.18

Wind reactions based on MWFRS pressures.

Hipjack supports 4-10-8 setback jacks with no webs.

Deflection meets L/240 live and L/180 total load.

Calculated vertical deflection is 0.08" due to live load at X = 4-1-12 and 0.15" due to total load at X = 4-1-12, L/240 live and L/180 total load.

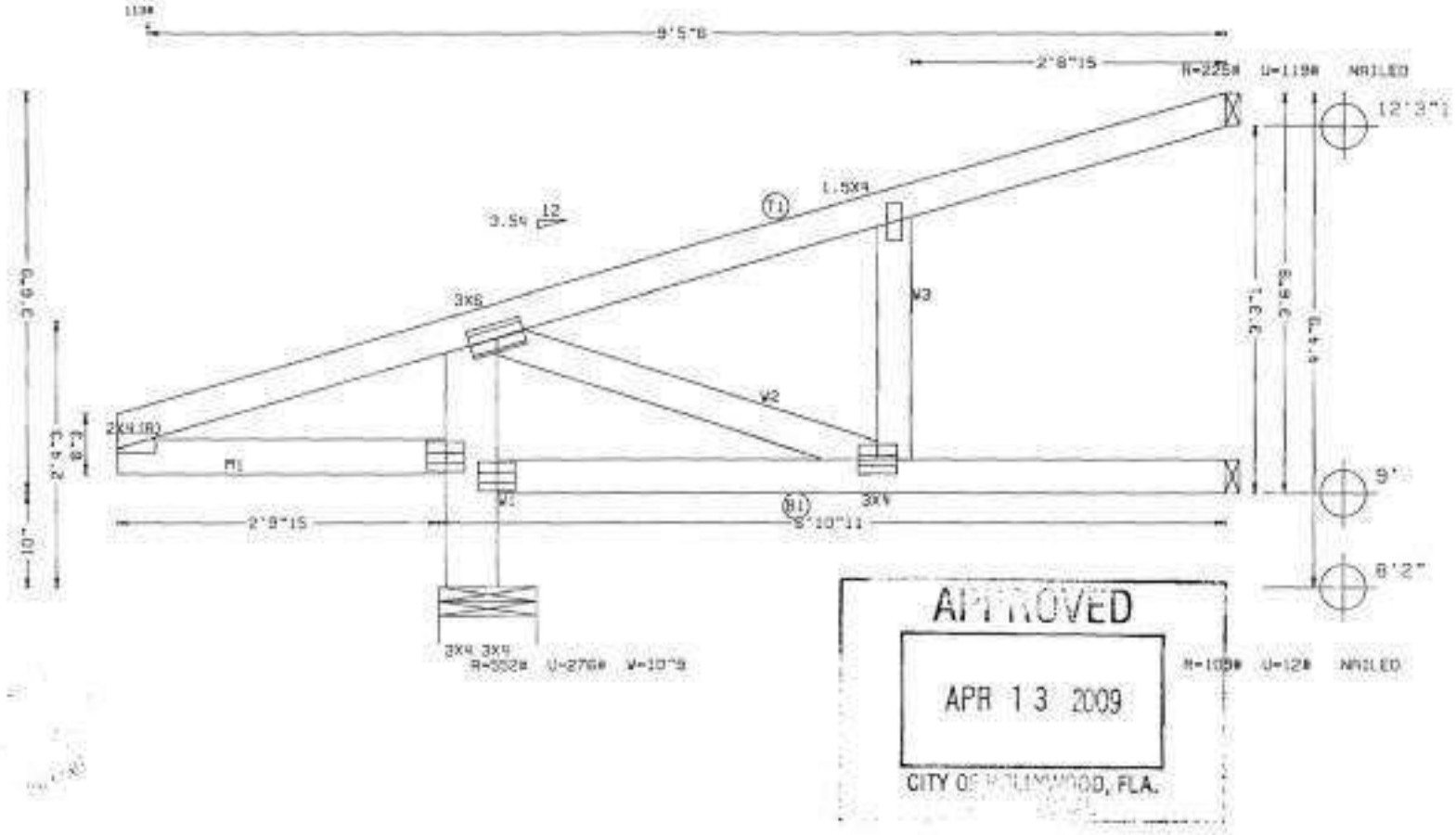

APPROVED

APR 13 2009

CITY OF HOLLYWOOD, FLA.

TAG = T15
PLT. TYP.=WAVE

DESIGN CRIT=FBC2004&TPI-2002 FT/RT=20(0)/10(0)

QTY= 2 TOTAL= 2

REV. 8.07.60.1218. SEQ = 20
SCALE = 1/4"=1'-0"

Cutlaw Designed Trees Co.
7779 W. 12th Avenue
Pompano Beach, FL 33069
Phone: 954.786.8800
Fax: 954.786.8804

WARNING TRUSSES REQUIRE EXTREME CARE IN FABRICATING, HANDLING, SHIPPING, INSTALLING AND BRACING. REFER TO BCSI 1-03 (BUILDING COMPONENT SAFETY INFORMATION), PUBLISHED BY TPI. (TRUSS PLATE INSTITUTE, 583 D'ONOFRIO DR.; SUITE 200; MADISON, WI 53719) AND WTCA (WOOD TRUSS COUNCIL OF AMERICA, 6300 ENTERPRISE LN. MADISON, WI 53719) FOR SAFETY PRACTICES PRIOR TO PERFORMING THESE FUNCTIONS. UNLESS OTHERWISE INDICATED, TOP CHORD SHALL HAVE PROPERLY ATTACHED STRUCTURAL PANELS AND BOTTOM CHORD SHALL HAVE A PROPERLY ATTACHED RIGID CEILING.
IMPORTANT FURNISH COPY OF THIS DESIGN TO INSTALLATION CONTRACTOR. ALPINE ENGINEERED PRODUCTS, INC., SHALL NOT BE RESPONSIBLE FOR ANY DEVIATION FROM THIS DESIGN; ANY FAILURE TO BUILD THE TRUSS IN CONFORMANCE WITH TPI; OR FABRICATING, HANDLING, SHIPPING, INSTALLING & BRACING OF TRUSSES. DESIGN CONFORMS WITH APPLICABLE PROVISIONS OF NDS (NATIONAL DESIGN SPEC, BY AF&PA) AND TPI. ALPINE CONNECTOR PLATES ARE MADE OF 20/18/16GA (W,H/S/K) ASTM A653 GRADE 40/60 (W,H/S) GALV. STEEL. APPLY PLATES TO EACH FACE OF TRUSS AND, UNLESS OTHERWISE LOCATED ON THIS DESIGN, POSITION PER DRAWINGS 1809-2. ANY INSPECTION OF PLATES FOLLOWED BY (1) SHALL BE PER ANNEX A3 OF TPI 1-2002 SEC. 3. A SEAL ON THIS DRAWING INDICATES ACCEPTANCE OF PROFESSIONAL ENGINEERING RESPONSIBILITY SOLELY FOR THE TRUSS COMPONENT DESIGN SHOWN. THE SUITABILITY AND USE OF THIS COMPONENT FOR ANY BUILDING IS THE RESPONSIBILITY OF THE BUILDING DESIGNER, PER ANSI/TPI 1 SEC. 2.

Marcia A. Shamoun, P.E.
MARCIA A. SHAMOUN, P.E., INC
1900 NW 112 AVE.
CORAL SPRINGS, FL 33071
(954) 753-1908
LICENSE Nos.E55251 & 19554

TC LL	30.0psf	REF	
TC DL	15.0psf	DATE	04-02-2009
BC DL	10.0psf	DRWG	
BC LL	0.0psf		JR
TOT.LD.	55.0psf	O/A LEN.	81'11
DUR.FAC.	1.33	JOB #:	20090173
SPACING	24.0"	TYPE	HIP_J[illegible]

Job:(20090173) -JOE HART BUILDER INC.- -ADDTION / J7A

THIS DWG. PREPARED BY THE ALPINE JOB DESIGNER PROGRAM FROM TRUSS MFR'S LAYOUT

Top chord 2x4 SP #2
Bot chord 2x4 SP #2
Webs 2x6 SP #2 Dense :W2 2x4 SP #3:

Left end vertical not exposed to wind pressure.

Bottom chord checked for 10.00 psf non concurrent live load.

Deflection meets L/240 live and L/180 total load.

Calculated vertical deflection is -0.05" due to live load at X = 1-9-6 and -0.06" due to total load at X = 1-9-6. L/240 live and L/180 total load.

140 mph wind, 15.00 ft mean hgt, ASCE 7-02, CLOSED bldg, Located anywhere in roof, CAT II, EXP C, wind TC DL=5.0 psf, wind BC DL=5.0 psf. Iw=1.00 GCpi(+/-)=0.18

Component and cladding wind pressures considered for uplift reactions.

Roof overhang/cantilever supports 2.00 psf soffit load.

Calculated vertical deflection is -0.01" due to live load and -0.03" due to total load at X = 3-3-3.

All wind load cases on this truss have a 1.33 duration factor.

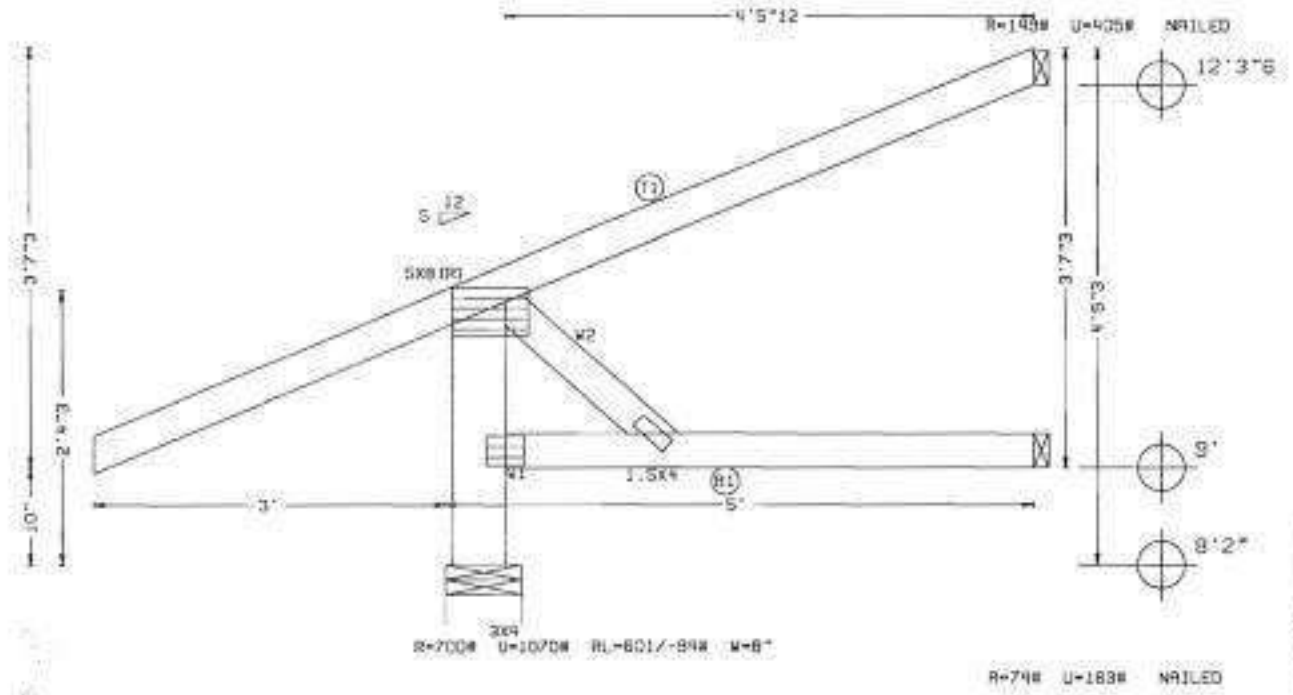

APPROVED
APR 13 2009
CITY OF HOLLYWOOD, FLA.
STRUCTURAL

TAG = T8
PLT. TYP.-WAVE

DESIGN CRIT=FBC2004/HVZ/TPI-2002 FT/RT=20X(0X)/10(0)

QTY= 2 TOTAL= 2

REV. 8.07.00.1218. SEQ = 201473 SCALE =0.6227

Gartom Designed Truss Co.
777 S.W. 12th Avenue
Pompano Beach, FL 33069
Phone 954-785-6800
Fax 954-785-6804

WARNING TRUSSES REQUIRE EXTREME CARE IN FABRICATING, HANDLING, SHIPPING, INSTALLING AND BRACING. REFER TO BCSI 1-03 (BUILDING COMPONENT SAFETY INFORMATION), PUBLISHED BY TPI (TRUSS PLATE INSTITUTE, 583 D'ONOFRIO DR., SUITE 200, MADISON, WI. 53719) AND WTCA (WOOD TRUSS COUNCIL OF AMERICA, 6300 ENTERPRISE LN, MADISON, WI 53719) FOR SAFETY PRACTICES PRIOR TO PERFORMING THESE FUNCTIONS. UNLESS OTHERWISE INDICATED, TOP CHORD SHALL HAVE PROPERLY ATTACHED STRUCTURAL PANELS AND BOTTOM CHORD SHALL HAVE A PROPERLY ATTACHED RIGID CEILING.
IMPORTANT FURNISH COPY OF THIS DESIGN TO INSTALLATION CONTRACTOR. ALPINE ENGINEERED PRODUCTS, INC., SHALL NOT BE RESPONSIBLE FOR ANY DEVIATION FROM THIS DESIGN; ANY FAILURE TO BUILD THE TRUSS IN CONFORMANCE WITH TPI; OR FABRICATING, HANDLING, SHIPPING, INSTALLING & BRACING OF TRUSSES. DESIGN CONFORMS WITH APPLICABLE PROVISIONS OF NDS (NATIONAL DESIGN SPEC. BY AF&PA) AND TPI. ALPINE CONNECTOR PLATES ARE MADE OF 20/18/16GA (W,H/S/K) ASTM A653 GRADE 40/60 (W,K/H,S) GALV. STEEL. APPLY PLATES TO EACH FACE OF TRUSS AND, UNLESS OTHERWISE LOCATED ON THIS DESIGN, POSITION PER DRAWINGS 160A-2. ANY INSPECTION OF PLATES FOLLOWED BY (1) SHALL BE PER ANNEX A3 OF TPI 1-2002 SEC. 3. A SEAL ON THIS DRAWING INDICATES ACCEPTANCE OF PROFESSIONAL ENGINEERING RESPONSIBILITY SOLELY FOR THE TRUSS COMPONENT DESIGN SHOWN. THE SUITABILITY AND USE OF THIS COMPONENT FOR ANY BUILDING IS THE RESPONSIBILITY OF THE BUILDING DESIGNER, PER ANSI/TPI 1 SEC. 2.

Morris A. Shashoua, P.E.
MAURICE A. SHASHOUA, P.E., INC
1808 NW 112 AVE.
CORAL SPRINGS, FL. 33071
(954) 753-1988
LICENSE Nos.E55251 & 19554

TC LL	30.0psf	REF	
TC DL	15.0psf	DATE	04-02-2009
BC DL	10.0psf	DRWG	
BC LL	0.0psf		JA
TOT.LD.	55.0psf	O/A LEN.	5
DUR.FAC.	1.33	JOB #:	20090173
SPACING	24.0"	TYPE	[illegible]

Job:(20090173) -JOE HART BUILDER INC. -ADDTION / J7

THIS DWG. PREPARED BY THE ALPINE JOB DESIGNER PROGRAM FROM TRUSS MFR'S LAYOUT

Top chord 2x4 SP #2
Bot chord 2x4 SP #2
Webs 2x6 SP #2 Dense :W2 2x4 SP #3:
:Lt Level Return 2x4 SP #3:

Left end vertical not exposed to wind pressure.

Calculated vertical deflection is -0.01" due to live load and -0.02" due to total load at X = 3-3-3.

All wind load cases on this truss have a 1.33 duration factor.

140 mph wind, 15.00 ft mean hgt, ASCE 7-02, CLOSED bldg, Located anywhere in roof, CAT II, EXP C, wind TC DL=5.0 psf, wind BC DL=5.0 psf, Iw=1.00 GCpi(+/-)=0.18

Component and cladding wind pressures considered for uplift reactions.

Bottom chord checked for 10.00 psf non-concurrent live load.

Deflection meets L/240 live and L/180 total load.

Calculated vertical deflection is -0.05" due to live load at X = 1-9-6 and -0.06" due to total load at X = 1-9-6. L/240 live and L/[illegible] load.

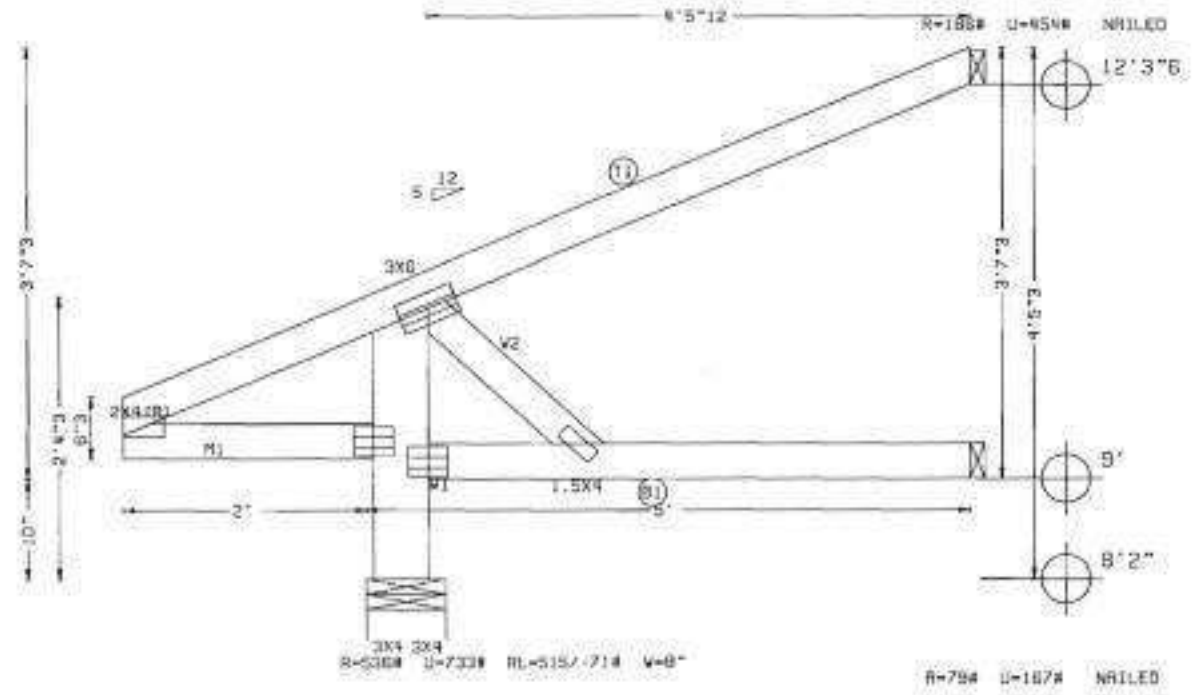

APPROVED
APR 13 2009
CITY OF HOLLYWOOD, FLA.
STRUCTURAL

TAG = T10
PLT. TYP.-WAVE

DESIGN CRIT-FRC2004/ANSI/TPI-2002 FT/RT-20[illegible]

QTY= 2 TOTAL= 2

REV. 8.07.00.1218.[illegible]

SEQ = 202086
SCALE =0.6419

Carlton Designed Truss Co.
777 S.W. 12th Avenue
Pompano Beach, Fl. 33069
Phone 954-786-8800
Fax 954-786-8804

WARNING TRUSSES REQUIRE EXTREME CARE IN FABRICATING, HANDLING, SHIPPING, INSTALLING AND BRACING. REFER TO BCSI 1-03 (BUILDING COMPONENT SAFETY INFORMATION), PUBLISHED BY TPI (TRUSS PLATE INSTITUTE, 583 D'ONOFRIO DR., SUITE 200, MADISON, WI. 53719) AND WTCA (WOOD TRUSS COUNCIL OF AMERICA, 6300 ENTERPRISE LN, MADISON, WI 53719) FOR SAFETY PRACTICES PRIOR TO PERFORMING THESE FUNCTIONS. UNLESS OTHERWISE INDICATED, TOP CHORD SHALL HAVE PROPERLY ATTACHED STRUCTURAL PANELS AND BOTTOM CHORD SHALL HAVE A PROPERLY ATTACHED RIGID CEILING.

IMPORTANT FURNISH COPY OF THIS DESIGN TO INSTALLATION CONTRACTOR. ALPINE ENGINEERED PRODUCTS, INC., SHALL NOT BE RESPONSIBLE FOR ANY DEVIATION FROM THIS DESIGN; ANY FAILURE TO BUILD THE TRUSS IN CONFORMANCE WITH TPI OR FABRICATING, HANDLING, SHIPPING, INSTALLING & BRACING OF TRUSSES. DESIGN CONFORMS WITH APPLICABLE PROVISIONS OF NDS (NATIONAL DESIGN SPEC. BY AF&PA) AND TPI. ALPINE CONNECTOR PLATES ARE MADE OF 20/18/16GA (W,H/S/K) ASTM A653 GRADE 40/60 (W,K/H,S) GALV. STEEL. APPLY PLATES TO EACH FACE OF TRUSS AND, UNLESS OTHERWISE LOCATED ON THIS DESIGN, POSITION PER DRAWINGS 1GDR-2. ANY INSPECTION OF PLATES FOLLOWED BY (1) SHALL BE PER ANNEX A3 OF TPI 1-2002 SEC. 3. A SEAL ON THIS DRAWING INDICATES ACCEPTANCE OF PROFESSIONAL ENGINEERING RESPONSIBILITY SOLELY FOR THE TRUSS COMPONENT DESIGN SHOWN. THE SUITABILITY AND USE OF THIS COMPONENT FOR ANY BUILDING IS THE RESPONSIBILITY OF THE BUILDING DESIGNER, PER ANSI/TPI 1 SEC. 2.

Morris A. Shoshoua, P.E.
MAURICE A. SHASHOUA, P.E., INC
1908 NW 112 AVE.
CORAL SPRINGS, FL. 33071
(954) 753-1988
LICENSE Nos.E8525) & 18554

TC LL	30.0psf	REF	
TC DL	15.0psf	DATE	04-02-2009
BC	10.0psf	DRW.	
BC LL	0.0psf		JA
TOT.LD.	55.0psf	D/A LEN.	5
DUR.FAC.	1.33	JOB #:	20090173
SPACING	24.0"	TYPE	JACK

Job:(20090173) -JOE HART BUILDER INC. -ADDTION / J5X

THIS DWG. PREPARED BY THE ALPINE JOB DESIGNER PROGRAM FROM TRUSS MFR'S LAYOUT

Top chord 2x6 SP #2 Dense
Bot chord 2x4 SP #2
Webs 2x6 SP SS Dense
:Lt Level Return 2x4 SP #2:

Left end vertical not exposed to wind pressure.

Bottom chord checked for 10.00 psf non-concurrent live load.

Calculated vertical deflection is 0.00" due to live load and 0.01" due to total load at X = 1-9-4.

Calculated vertical deflection is 0.00" due to live load at X = 0-3-8 and 0.00" due to total load at X = 0-3-8. L/240 live and L/180 total load.

** The maximum horizontal reaction is 292# **

[**] 2 plate(s) require special positioning. Refer to scaled plate plot [illegible] for special positioning requirements.

140 mph wind, 15.00 ft mean hgt, ASCE 7-02, [illegible] bldg, [illegible] roof, CAT II, EXP C, wind TC DL=5.0 psf, wind BC DL=5.0 psf, Iw=1.00 GCpi(+/-)=0.18

Component and cladding wind pressures considered for uplift reactions.

Deflection meets L/240 live and L/180 total load.

***** BEARING ANALOG MODIFIED! *****

All wind load cases on this truss have a 1.33 duration factor.

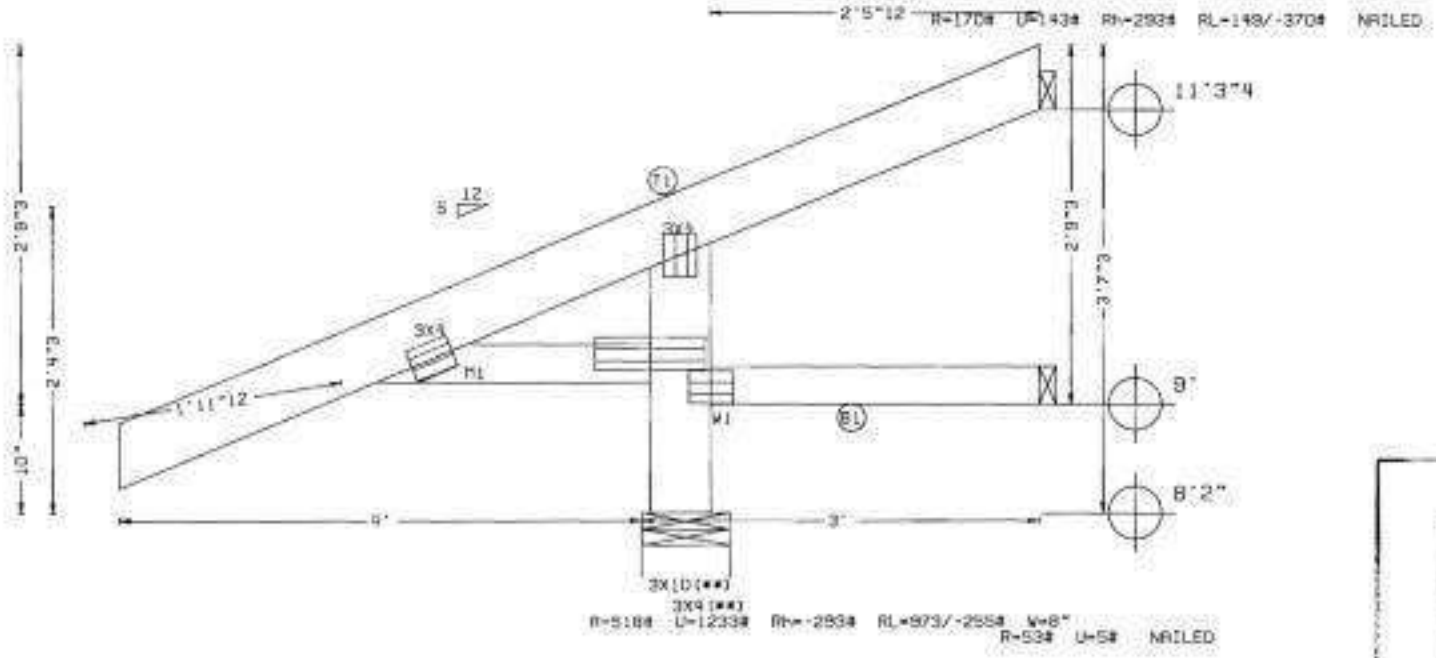

APPROVED
APR 13 2009
CITY OF HOLLYWOOD, FLA.
STRUCTURAL

TAG = T17
PLT. TYP.-WAVE

DESIGN CRIT=FBC2004MAH2/TPI-2002 F7/RT=20F(DOT)/10(DOT)

QTY= 2 TOTAL= 2

REV. 8.07.00.1218. SCALE =0.6957

Custom Designed Truss Co.
777 S.W. 12th Avenue
Pompano Beach, FL 33069
Phone: 954.786.8000
Fax: 954.786.8804

WARNING TRUSSES REQUIRE EXTREME CARE IN FABRICATING, HANDLING, SHIPPING, INSTALLING AND BRACING. REFER TO BCSI 1-03 (BUILDING COMPONENT SAFETY INFORMATION), PUBLISHED BY TPI (TRUSS PLATE INSTITUTE, 583 D'ONOFRIO DR., SUITE 200, MADISON, WI. 53719) AND WTCA (WOOD TRUSS COUNCIL OF AMERICA, 6300 ENTERPRISE LN, MADISON, WI 53719) FOR SAFETY PRACTICES PRIOR TO PERFORMING THESE FUNCTIONS. UNLESS OTHERWISE INDICATED, TOP CHORD SHALL HAVE PROPERLY ATTACHED STRUCTURAL PANELS AND BOTTOM CHORD SHALL HAVE A PROPERLY ATTACHED RIGID CEILING.
IMPORTANT FURNISH COPY OF THIS DESIGN TO INSTALLATION CONTRACTOR. ALPINE ENGINEERED PRODUCTS, INC., SHALL NOT BE RESPONSIBLE FOR ANY DEVIATION FROM THIS DESIGN; ANY FAILURE TO BUILD THE TRUSS IN CONFORMANCE WITH TPI; OR FABRICATING, HANDLING, SHIPPING, INSTALLING & BRACING OF TRUSSES. DESIGN CONFORMS WITH APPLICABLE PROVISIONS OF NDS (NATIONAL DESIGN SPEC. BY AF&PA) AND TPI. ALPINE CONNECTOR PLATES ARE MADE OF 20/18/16GA (W,H/S/A) ASTM A653 GRADE 40/GC (W,H/H,S) SALV. STEEL. APPLY PLATES TO EACH FACE OF TRUSS AND, UNLESS OTHERWISE LOCATED ON THIS DESIGN, POSITION PER DRAWINGS 16DA-Z. ANY INSPECTION OF PLATES FOLLOWED BY (1) SHALL BE PER ANNEX A3 OF TPI 1-2002 SEC. 3. A SEAL ON THIS DRAWING INDICATES ACCEPTANCE OF PROFESSIONAL ENGINEERING RESPONSIBILITY SOLELY FOR THE TRUSS COMPONENT DESIGN SHOWN. THE SUITABILITY AND USE OF THIS COMPONENT FOR ANY BUILDING IS THE RESPONSIBILITY OF THE BUILDING DESIGNER, PER ANSI/TPI 1 SEC. 2.

Maurice A. Shoshoua, P.E.
MAURICE A. SHASHOUA, P.E., INC
1908 NW 112 AVE.
CORAL SPRINGS, FL. 33071
(954) 753-1988
LICENSE Nos. E85251 & 18554

TC LL	30.0psf	REF	
TC DL	15.0psf	DATE	04-02-2009
BC DL	10.0psf	DRWG	
BC LL	0.0psf		
TOT.LD.	55.0psf	D/A LEN.	3
DUR.FAC.	1.33	JOB #:	20090173
SPACING	24.0"	TYPE	JACK

Job:(20090173) -JOE HART BUILDER INC. -RODTION / J5A

THIS DWG. PREPARED BY THE ALPINE JOB DESIGNER PROGRAM FROM TRUSS MFR'S LAYOUT

Top chord 2x4 SP #2
Bot chord 2x4 SP #2
Webs 2x6 SP #2 Dense :W2 2x4 SP #3:

Left end vertical not exposed to wind pressure.

Bottom chord checked for 10.00 psf non-concurrent live load.

Deflection meets L/240 live and L/180 total load.

Calculated vertical deflection is -0.00" due to live load at X = 2-6-14 and -0.00" due to total load at X = 2-6-14, L/240 live and L/180 total load.

All wind load cases on this truss have a 1.33 duration factor.

140 mph wind, 15.00 ft mean hgt, ASCE 7-02, CLOSED bldg, Located anywhere in roof, CAT II, EXP C, wind TC DL=5.0 psf, wind BC DL=5.0 psf, Iw=1.00 GCpi(+/-)=0.18

Component and cladding wind pressures considered for uplift reactions.

Roof overhang/cantilever supports 2.00 psf soffit load.

Calculated vertical deflection is 0.00" due to live load and 0.00" due to total load at X = 1-5-3.

** WARNING! Overhang deflections excessive ** Truss has vertical deflection on overhang of 0.23" due to live load and 0.17" due to dead load at X = -2-0-0. Creep increase factor for dead load is 1.00.

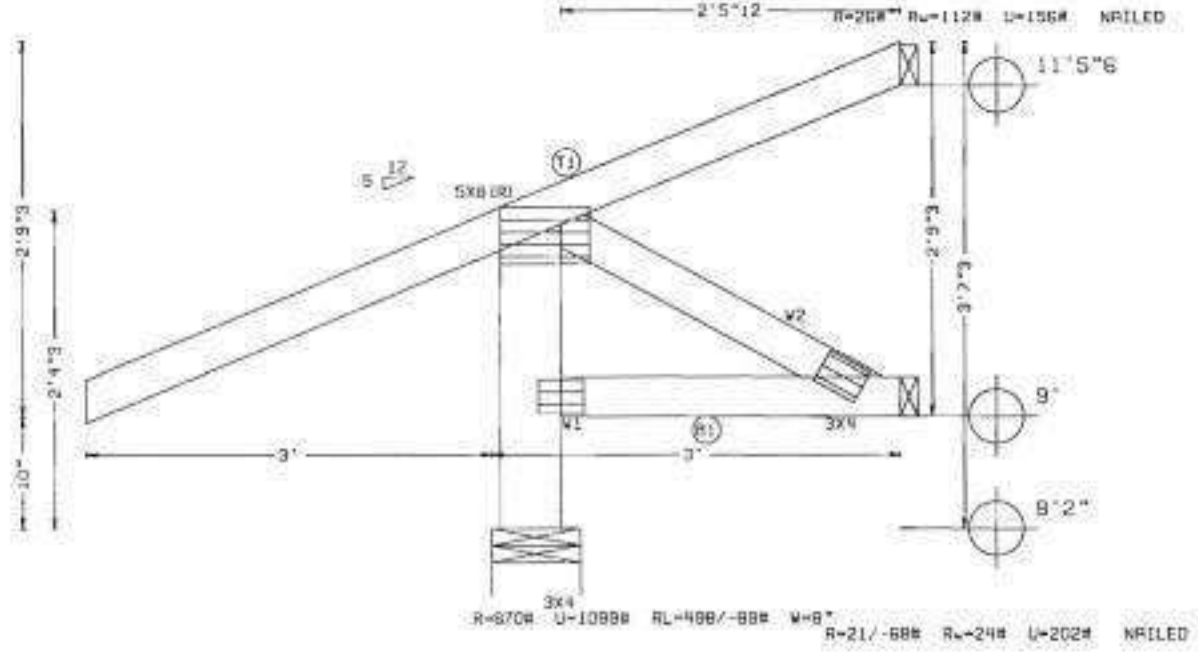

APPROVED
APR 13 2009
CITY OF HOLLYWOOD, FLA.

TAG = T3S
PLY, TYP.-WAVE

DESIGN CRIT-FBC2007&TPI-2002 FT/RT=20(10)/10(0)

QTY= 2 TOTAL= 2

REV. 8.07.00.1218. SCALE =0.7194

Custom Designed Trusses Co.
727 S.W. 12th Avenue
Pompano Beach, FL 33069
Phone: 954-786-8500
Fax: 954-786-8504

WARNING TRUSSES REQUIRE EXTREME CARE IN FABRICATING, HANDLING, SHIPPING, INSTALLING AND BRACING. REFER TO BCSI 1-03 (BUILDING COMPONENT SAFETY INFORMATION), PUBLISHED BY TPI (TRUSS PLATE INSTITUTE, 583 D'ONOFRIO DR.; SUITE 200, MADISON, WI. 53719) AND WTCA (WOOD TRUSS COUNCIL OF AMERICA, 6300 ENTERPRISE LN, MADISON, WI 53719) FOR SAFETY PRACTICES PRIOR TO PERFORMING THESE FUNCTIONS. UNLESS OTHERWISE INDICATED, TOP CHORD SHALL HAVE PROPERLY ATTACHED STRUCTURAL PANELS AND BOTTOM CHORD SHALL HAVE A PROPERLY ATTACHED RIGID CEILING.
IMPORTANT FURNISH COPY OF THIS DESIGN TO INSTALLATION CONTRACTOR. ALPINE ENGINEERED PRODUCTS, INC. SHALL NOT BE RESPONSIBLE FOR ANY DEVIATION FROM THIS DESIGN; ANY FAILURE TO BUILD THE TRUSS IN CONFORMANCE WITH TPI 1; OR FABRICATING, HANDLING, SHIPPING, INSTALLING & BRACING OF TRUSSES. DESIGN CONFORMS WITH APPLICABLE PROVISIONS OF NDS (NATIONAL DESIGN SPEC. BY AF&PA) AND TPI. ALPINE CONNECTOR PLATES ARE MADE OF 20/18/16GA (W,H/R/K) ASTM A653 GRADE 40/60 (W,H/R/K) GALV. STEEL. APPLY PLATES TO EACH FACE OF TRUSS AND, UNLESS OTHERWISE LOCATED ON THIS DESIGN, POSITION PER DRAWINGS 100M-Z. ANY INSPECTION OF PLATES FOLLOWED BY (1) SHALL BE PER ANNEX A3 OF TPI 1-2002 SEC. 3. A SEAL ON THIS DRAWING INDICATES ACCEPTANCE OF PROFESSIONAL ENGINEERING RESPONSIBILITY SOLELY FOR THE TRUSS COMPONENT DESIGN SHOWN. THE SUITABILITY AND USE OF THIS COMPONENT FOR ANY BUILDING IS THE RESPONSIBILITY OF THE BUILDING DESIGNER, PER ANSI/TPI 1 SEC. 2.

Morris A. Shoshoua, P.E.
MORRIS A. SHOSHOUA, P.E., INC
1909 NW 113 AVE.
CORAL SPRINGS, FL. 33071
(954) 753-1988
LICENSE Nos.E55251 & 19554

TC LL	30.0psf	REF	
TC DL	15.0psf	DATE	04-02-2009
BC DL	10.0psf	DRWG	
BC LL	0.0psf		JA
TOT.LD.	55.0psf	O/A LEN.	3
DUR.FAC.	1.33	JOB #:	20090173
SPACING	24.0"	TYPE	JACK

Job: (20090173) -JOE HART BUILDER INC. -ADDTION / J5

THIS DWG. PREPARED BY THE ALPINE JOB DESIGNER PROGRAM FROM TRUSS MFR'S LAYOUT

Top chord 2x4 SP #2
Bot chord 2x4 SP #2
Webs 2x6 SP #2 Dense :W2 2x4 SP #3:
:Lt Level Return 2x4 SP #3:

Left end vertical not exposed to wind pressure.

Calculated vertical deflection is 0.00" due to live load and 0.00" due to total load at X = 1-5-3.

All wind load cases on this truss have a 1.33 duration factor.

140 mph wind, 15.00 ft mean hgt, ASCE 7-02, CLOSED bldg, Located anywhere in roof, CAT II, EXP C, wind TC DL=5.0 psf, wind BC DL=5.0 psf, Tu=1.00 GCpi(+/-)=0.18

Component and cladding wind pressures considered for uplift r[illegible]ions.

Bottom chord checked for 10.00 psf non-concurrent live load.

Deflection meets L/240 live and L/180 total load.

Calculated vertical deflection is -0.00" due to live load at X = 2-6-14 and -0.00" due to total load at X = 2-6-14. L/240 live and L/180 total [illegible]

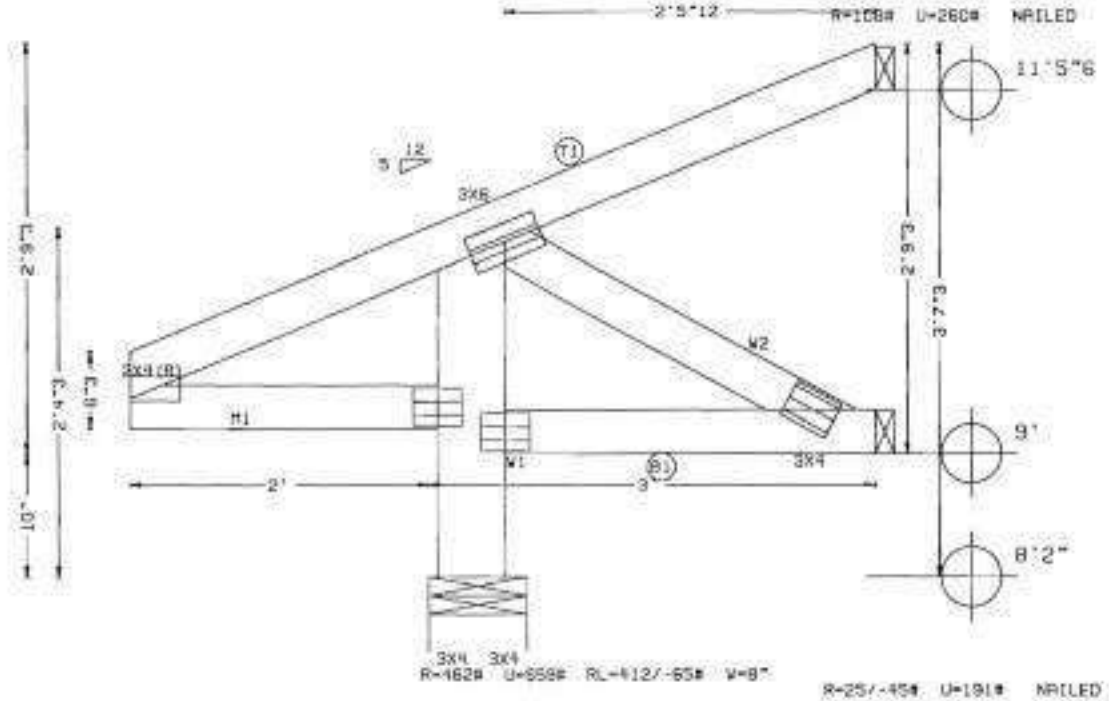

APPROVED
APR 13 2009
CITY OF HOLLYWOOD, FLA.

TAG = T11
PLT. TYP.-WAVE

DESIGN CRIT=FBC2004/WHZ/TPI-2002-FT/RT=20#(OF)/10(0)

QTY= 4 TOTAL= 4

REV. 8.07.00.1218, SEQ 202008 SCALE =0.7905

Custom Designed Truss Co.
777 S.W. 12th Avenue
Pompano Beach, FL 33069
Phone: 954.788.8800
Fax: 954-788-8804

WARNING TRUSSES REQUIRE EXTREME CARE IN FABRICATING, HANDLING, SHIPPING, INSTALLING AND BRACING. REFER TO BCSI 1-03 (BUILDING COMPONENT SAFETY INFORMATION), PUBLISHED BY TPI (TRUSS PLATE INSTITUTE, 583 D'ONOFRIO DR., SUITE 200, MADISON, WI. 53719) AND WTCA (WOOD TRUSS COUNCIL OF AMERICA, 6300 ENTERPRISE LN, MADISON, WI 53719) FOR SAFETY PRACTICES PRIOR TO PERFORMING THESE FUNCTIONS. UNLESS OTHERWISE INDICATED, TOP CHORD SHALL HAVE PROPERLY ATTACHED STRUCTURAL PANELS AND BOTTOM CHORD SHALL HAVE A PROPERLY ATTACHED RIGID CEILING.

IMPORTANT FURNISH COPY OF THIS DESIGN TO INSTALLATION CONTRACTOR. ALPINE ENGINEERED PRODUCTS, INC., SHALL NOT BE RESPONSIBLE FOR ANY DEVIATION FROM THIS DESIGN; ANY FAILURE TO BUILD THE TRUSS IN CONFORMANCE WITH TPI; OR FABRICATING, HANDLING, SHIPPING, INSTALLING & BRACING OF TRUSSES. DESIGN CONFORMS WITH APPLICABLE PROVISIONS OF NDS (NATIONAL DESIGN SPEC. BY AF&PA) AND TPI. ALPINE CONNECTOR PLATES ARE MADE OF 20/18/16GA (W,H/S/K) ASTM A653 GRADE 40/60 (W,K/H,S) GALV. STEEL. APPLY PLATES TO EACH FACE OF TRUSS AND, UNLESS OTHERWISE LOCATED ON THIS DESIGN, POSITION PER DRAWINGS 160P-2. ANY INSPECTION OF PLATES FOLLOWED BY (I) SHALL BE PER ANNEX B3 OF TPI 1-2002 SEC. 3. A SEAL ON THIS DRAWING INDICATES ACCEPTANCE OF PROFESSIONAL ENGINEERING RESPONSIBILITY SOLELY FOR THE TRUSS COMPONENT DESIGN SHOWN. THE SUITABILITY AND USE OF THIS COMPONENT FOR ANY BUILDING IS THE RESPONSIBILITY OF THE BUILDING DESIGNER, PER ANSI/TPI 1 SEC. 2.

Morris A. Shoshoua, P.E.
MAURICE A. SHASHOUA, P.E., INC
1808 NW 112 AVE.
CORAL SPRINGS, FL 33071
(954) 753-1988
LICENSE Nos.E85251 & 19554

TC LL	30.0psf	REF	
TC DL	15.0psf	DATE	04-[illegible]
BC DL	10.0psf	DRWG	
BC LL	[illegible].0psf		
TOT.LD.	55.0psf	O/A LEN.	3
DUR.FAC.	1.33	JOB #:	20090173
SP[illegible]	24.0"	TYPE	[illegible]ACK

Job: (20090173) -JOE HART BUILDER INC. -ADDTION / J3

THIS DWG. PREPARED BY THE ALPINE JOB DESIGNER PROGRAM FROM TRUSS MFR'S LAYOUT

Top chord 2x4 SP #2
Bot chord 2x4 SP #2
Webs 2x6 SP #2 Dense
:Lt Level Return 2x4 SP #3:

Left end vertical not exposed to wind pressure.

Calculated vertical deflection is 0.00" due to live load and 0.00" due to total load at X = 0-3-8.

***** BEARING ANALOG MODIFIED! *****

All wind load cases on this truss have a 1.33 duration factor.

140 mph wind, 15.00 ft mean hgt, ASCE 7-02, CLOSED bldg, Located anywhere in roof, CAT II, EXP C, wind TC DL=5.0 psf, wind BC DL=5.0 psf. Iw=1.00 GCpi(+/-)=0.18

Component and cladding wind pressures considered for uplift reactions.

Bottom chord checked for 10.00 psf non-concurrent live load.

Deflection meets L/240 live and L/180 total load.

Calculated vertical deflection is 0.00" due to live load at X = 0-3-8 and 0.00" due to total load at X = 0-3-8. L/240 live and L/180 total load.

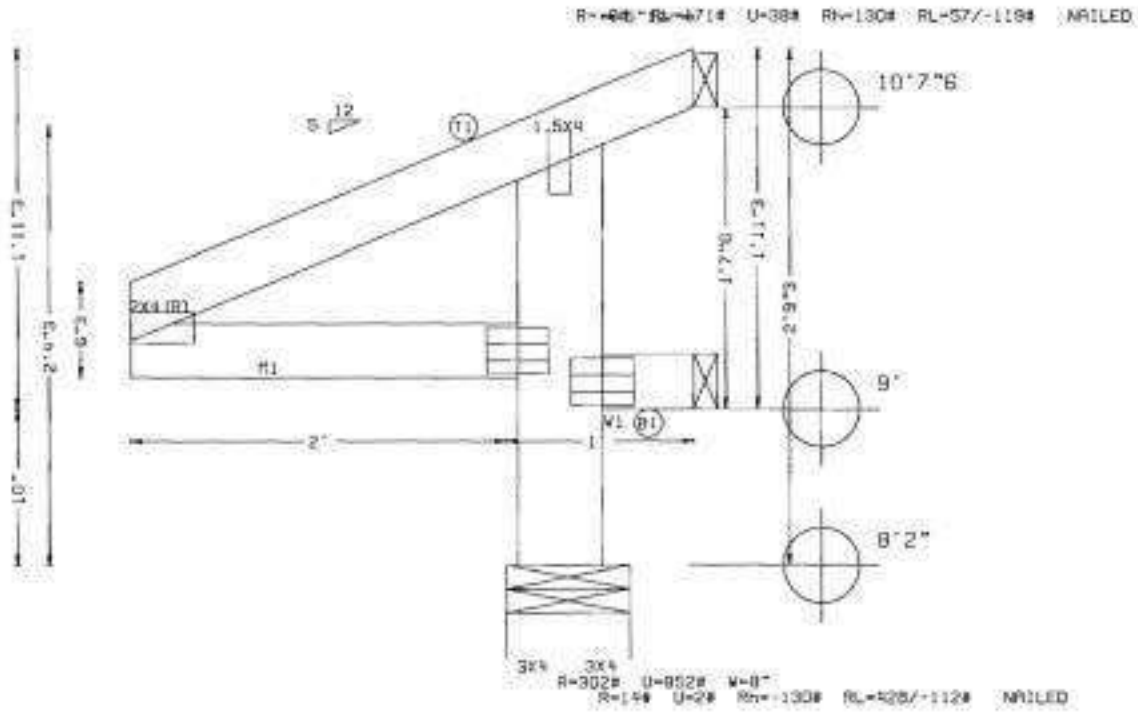

APPROVED
APR 13 2009
CITY OF HOLLYWOOD, FLA.

TAG = T34
PLT. TYP.-WAVE

DESIGN CRIT-FBC2004/HVHZ/TPI-2002 FT/RT-[illegible]

QTY= 6 TOTAL= 6

REV. 8.07.00.1218.

SEQ = 202004
SCALE =0.9979

Custom Designed Truss Co.
777 S.W. 12th Avenue
Pompano Beach FL 33069
Phone: 954-786-8820
Fax: 954-783-8804

WARNING TRUSSES REQUIRE EXTREME CARE IN FABRICATING, HANDLING, SHIPPING, INSTALLING AND BRACING. REFER TO BCSI 1-03 (BUILDING COMPONENT SAFETY INFORMATION), PUBLISHED BY TPI (TRUSS PLATE INSTITUTE, 583 D'ONOFRIO DR., SUITE 200, MADISON, WI. 53718) AND WTCA (WOOD TRUSS COUNCIL OF AMERICA, 6300 ENTERPRISE LN, MADISON, WI 53719) FOR SAFETY PRACTICES PRIOR TO PERFORMING THESE FUNCTIONS. UNLESS OTHERWISE INDICATED, TOP CHORD SHALL HAVE PROPERLY ATTACHED STRUCTURAL PANELS AND BOTTOM CHORD SHALL HAVE A PROPERLY ATTACHED RIGID CEILING.
IMPORTANT FURNISH COPY OF THIS DESIGN TO INSTALLATION CONTRACTOR. ALPINE ENGINEERED PRODUCTS, INC., SHALL NOT BE RESPONSIBLE FOR ANY DEVIATION FROM THIS DESIGN; ANY FAILURE TO BUILD THE TRUSS IN CONFORMANCE WITH TPI; OR FABRICATING, HANDLING, SHIPPING, INSTALLING & BRACING OF TRUSSES. DESIGN CONFORMS WITH APPLICABLE PROVISIONS OF NDS (NATIONAL DESIGN SPEC. BY AF&PA) AND TPI. ALPINE CONNECTOR PLATES ARE MADE OF 20/18/16GA (W,H/S/K) ASTM A653 GRADE 40/SD (W,K/H,S) GALV. STEEL. APPLY PLATES TO EACH FACE OF TRUSS AND, UNLESS OTHERWISE LOCATED ON THIS DESIGN, POSITION PER DRAWINGS 160A-Z. ANY INSPECTION OF PLATES FOLLOWED BY (I) SHALL BE PER ANNEX A3 OF TPI 1-2002 SEC. 3. A SEAL ON THIS DRAWING INDICATES ACCEPTANCE OF PROFESSIONAL ENGINEERING RESPONSIBILITY SOLELY FOR THE TRUSS COMPONENT DESIGN SHOWN. THE SUITABILITY AND USE OF THIS COMPONENT FOR ANY BUILDING IS THE RESPONSIBILITY OF THE BUILDING DESIGNER, PER ANSI/TPI 1 SEC. 2.

Morris A. Shashoua, P.E.
MAURICE A. SHASHOUA, P.E., INC
1908 NW 112 AVE.
CORAL SPRINGS, FL. 33071
(954) 753-1988
LICENSE Nos.[illegible] & [illegible]

TC LL	30.0psf	REF	
TC DL	15.0psf	DATE	04-02-2009
BC DL	10.0psf	DRWG	
BC LL	0.0psf		JA
TOT.LD.	55.0psf	O/A LEN.	1
DUR.FAC.	1.33	JOB #:	20090173
SPACING	24.0"	TYPE	JACK

Job: (20090173) -JOE HART BUILDER INC. -ADDITION / J3A

THIS DWG. PREPARED BY THE ALPINE JOB DESIGNER PROGRAM FROM TRUSS MFR'S JOB

Top chord 2x4 SP #2
Bot chord 2x4 SP #2
Webs 2x6 SP #2 Dense
:Lt Level Return 2x4 SP #3:

Left end vertical not exposed to wind pressure.

Bottom chord checked for 10.00 psf non-concurrent live load.

Deflection meets L/240 live and L/180 total load.

Calculated vertical deflection is 0.00" due to live load at X = 0-3-8 and 0.00" due to total load at X = 0-3-8, L/240 live and L/180 total load.

Negative reaction(s) of -565# MAX. (See below) from a non-wind load case requires uplift connection.

140 mph wind, 15.00 ft mean hgt, ASCE 7-02, CLOSED bldg, Located anywhere in roof, CAT II, EXP C, wind TC DL=5.0 psf, wind BC DL=5.0 psf, Iw=1.00 GCpi(+/-)=0.18

Component and cladding wind pressures considered for uplift reactions.

Calculated vertical deflection is 0.00" due to live load and 0.00" due to total load at X = 0-3-8.

***** BEARING ANALOG MODIFIED! *****

All wind load cases on this truss have a 1.33 duration factor.

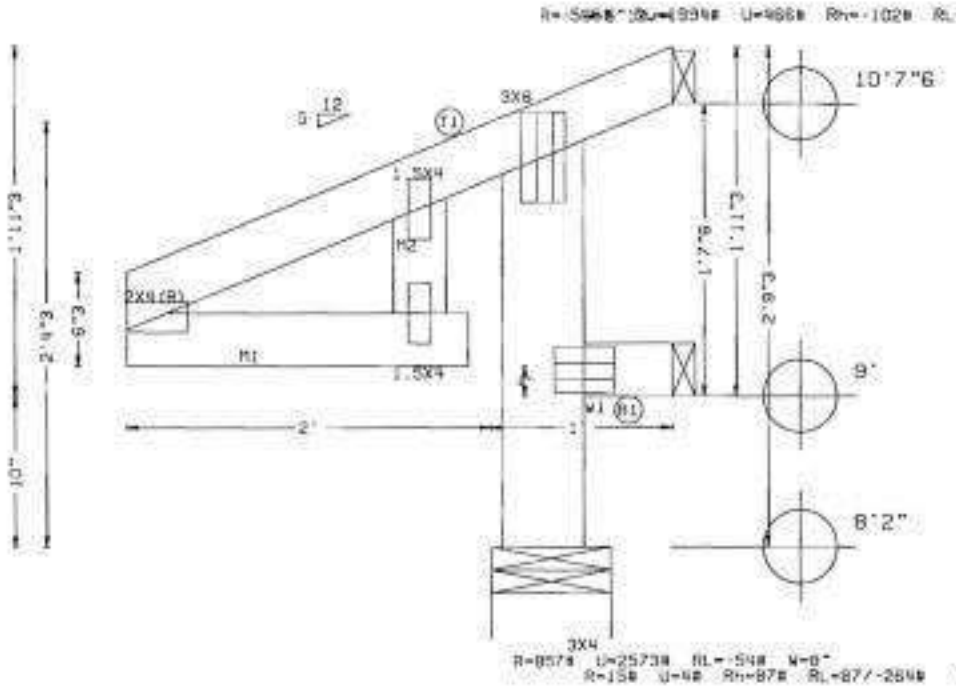



TAG = T12
PLT. TYP.-WAVE

DESIGN CRIT=FBC2004&TPI2002 FT/RT=20F(0)/10(0)

QTY= 2 TOTAL= 2

REV. 8.07.00.1218. SCALE =0.9670

SEQ = 201456

Custom Designed Truss Co.
777 S.W. 12th Avenue
Pompano Beach, FL 33069
Phone: 954.785.8900
Fax: 954.785.8904

WARNING TRUSSES REQUIRE EXTREME CARE IN FABRICATING, HANDLING, SHIPPING, INSTALLING AND BRACING. REFER TO BCSI 1-03 (BUILDING COMPONENT SAFETY INFORMATION), PUBLISHED BY TPI (TRUSS PLATE INSTITUTE, 583 D'ONOFRIO DR.; SUITE 200, MADISON, WI. 53719) AND WTCA (WOOD TRUSS COUNCIL OF AMERICA, 6300 ENTERPRISE LN, MADISON, WI 53719) FOR SAFETY PRACTICES PRIOR TO PERFORMING THESE FUNCTIONS. UNLESS OTHERWISE INDICATED, TOP CHORD SHALL HAVE PROPERLY ATTACHED STRUCTURAL PANELS AND BOTTOM CHORD SHALL HAVE A PROPERLY ATTACHED RIGID CEILING.
IMPORTANT FURNISH COPY OF THIS DESIGN TO INSTALLATION CONTRACTOR. ALPINE ENGINEERED PRODUCTS, INC., SHALL NOT BE RESPONSIBLE FOR ANY DEVIATION FROM THIS DESIGN; ANY FAILURE TO BUILD THE TRUSS IN CONFORMANCE WITH TPI1 OR FABRICATING, HANDLING, SHIPPING, INSTALLING & BRACING OF TRUSSES. DESIGN CONFORMS WITH APPLICABLE PROVISIONS OF NDS (NATIONAL DESIGN SPEC, BY AF&PA) AND TPI1. ALPINE CONNECTOR PLATES ARE MADE OF 20/18/16GA (W,H/S/K) ASTM A653 GRADE 40/40 (W,K/H,S) GALV. STEEL. APPLY PLATES TO EACH FACE OF TRUSS AND, UNLESS OTHERWISE LOCATED ON THIS DESIGN, POSITION PER DRAWINGS 1608-2. ANY INSPECTION OF PLATES FOLLOWED BY ITI SHALL BE PER ANNEX A3 OF TPI 1-2002 SEC. 3. A SEAL ON THIS DRAWING INDICATES ACCEPTANCE OF PROFESSIONAL ENGINEERING RESPONSIBILITY SOLELY FOR THE TRUSS COMPONENT DESIGN SHOWN. THE SUITABILITY AND USE OF THIS COMPONENT FOR ANY BUILDING IS THE RESPONSIBILITY OF THE BUILDING DESIGNER, PER ANSI/TPI 1 SEC. 2.

Maurice A. Shaykhoun, P.E.
MAURICE A. SHAYKHOUN, P.E., INC
1828 NW 112 AVE.
CORAL SPRINGS, FL. 33071
(954) 753-1868
LICENSE Nos.:E60251 & 18554

TC LL	30.0psf	REF	
TC DL	15.0psf	DATE	04-02-2009
BC DL	10.0psf	DRWG	
BC LL	0.0psf		JA
TOT.LD.	55.0psf	[illegible] EN. 1	
DUR.FAC.	1.33	JOB #:	20090173
SPACING	24.0"	TYPE	JACK

Job: (20090173) -JOE HART BUILDER INC. -ADDTION / J1

THIS DWG. PREPARED BY THE ALPINE JOB DESIGNER PROGRAM FROM TRUSS MFR'S LAYOUT

Top chord 2x4 SP #2
Bot chord 2x4 SP #2

140 mph wind, 15.00 ft mean hgt, ASCE 7-02, CLOSED bldg, Located anywhere in roof, CAT II, EXP C, wind TC DL=5.0 psf, wind BC DL=5.0 psf, Iw=1.00
GCpi(+/-)=0.18

Component and cladding wind pressures considered for uplift reactions.

Deflection meets L/240 live and L/180 total load.

***** BEARING ANALOG MODIFIED! *****

SPECIAL LOADS
------(LUMBER DUR.FAC.=1.33 / PLATE DUR.FAC.=1.33)
TC - From 93 PLF at 0.00 to 93 PLF at 1.00
BC - From 8 PLF at 0.00 to 8 PLF at 1.00

Bottom chord checked for 10.00 psf non-concurrent live load.

Calculated vertical deflection is 0.00" due to live load and 0.00" due to total load at X = 0-0-10.

Calculated vertical deflection is 0.00" due to live load at X = 0-0-10 and 0.00" due to total load at X = 0-0-10. L/240 live and L/180 total load.

All wind load cases on this truss have a 1.33 duration factor.

R=74# U=155# Rh=72# RL=53/-134# NAILED

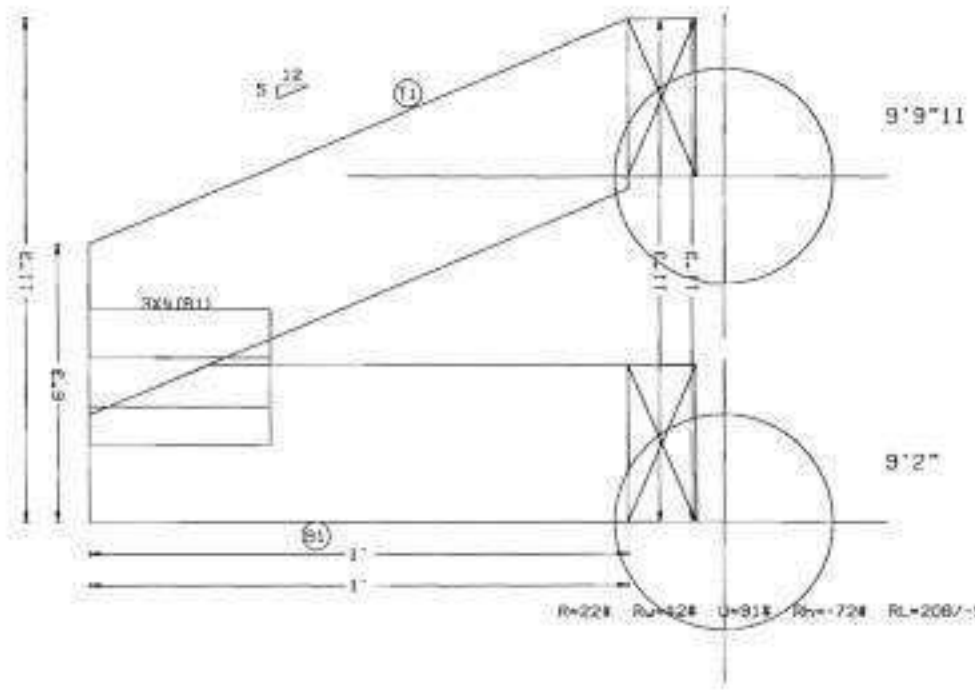

R=22# Ru=42# U=91# Rh=-72# RL=208/-55# NAILED

APPROVED
APR 13 2009
CITY OF HOLLYWOOD, FLA.

TAG = T7
PLT. TYP.-WAVE

DESIGN CRIT=FBC2004MHZ/TPI 2002 FT/RT=20(0)/10(0)

QTY= 8 TOTAL= 8

REV. 8.07.00.1218.

SEQ = 20[illegible]
SCALE =2.8685

Custom Designed Truss Co.
777 S.W. 10th Avenue
Pompano Beach, FL 33069
Phone: 954-786-8800
Fax: 954-786-8804

WARNING TRUSSES REQUIRE EXTREME CARE IN FABRICATING, HANDLING, SHIPPING, INSTALLING AND BRACING. REFER TO BCSI 1-03 (BUILDING COMPONENT SAFETY INFORMATION), PUBLISHED BY TPI (TRUSS PLATE INSTITUTE, 583 D'ONOFRIO DR., SUITE 200, MADISON, WI. 53719) AND WTCA (WOOD TRUSS COUNCIL OF AMERICA, 6300 ENTERPRISE LN, MADISON, WI 53719) FOR SAFETY PRACTICES PRIOR TO PERFORMING THESE FUNCTIONS. UNLESS OTHERWISE INDICATED, TOP CHORD SHALL HAVE PROPERLY ATTACHED STRUCTURAL PANELS AND BOTTOM CHORD SHALL HAVE A PROPERLY ATTACHED RIGID CEILING.
IMPORTANT FURNISH COPY OF THIS DESIGN TO INSTALLATION CONTRACTOR. ALPINE ENGINEERED PRODUCTS, INC., SHALL NOT BE RESPONSIBLE FOR ANY DEVIATION FROM THIS DESIGN; ANY FAILURE TO BUILD THE TRUSS IN CONFORMANCE WITH TPI; OR FABRICATING, HANDLING, SHIPPING, INSTALLING & BRACING OF TRUSSES. DESIGN CONFORMS WITH APPLICABLE PROVISIONS OF NDS (NATIONAL DESIGN SPEC. BY AF&PA) AND TPI. ALPINE CONNECTOR PLATES ARE MADE OF 20/18/16GA (W,H/S/K) ASTM A653 GRADE 40/80 (W,K/H,S) GALV. STEEL. APPLY PLATES TO EACH FACE OF TRUSS AND, UNLESS OTHERWISE LOCATED ON THIS DESIGN, POSITION PER DRAWINGS 100A-Z. ANY INSPECTION OF PLATES FOLLOWED BY (1) SHALL BE PER ANNEX A3 OF TPI 1-2002 SEC. 3. A SEAL ON THIS DRAWING INDICATES ACCEPTANCE OF PROFESSIONAL ENGINEERING RESPONSIBILITY SOLELY FOR THE TRUSS COMPONENT DESIGN SHOWN. THE SUITABILITY AND USE OF THIS COMPONENT FOR ANY BUILDING IS THE RESPONSIBILITY OF THE BUILDING DESIGNER, PER ANSI/TPI 1 SEC. 2.

Morris A. Shashoua, P.E.
MAURICE A. SHASHOUA, P.E., INC
1908 NW 112 AVE
CORAL SPRINGS, FL. 33071
(954) 783-1888
LICENSE Nos.E85251 & 19994

TC LL	30.0psf	REF	
TC DL	15.0psf	DATE	04-02-2009
BC DL	10.0psf	DRWG	
BC LL	0.0psf		
TOT.LD.	55.0psf	O/A LEN.	1
DUR.FAC.	1.33	JOB #:	20090173
SPACING	24.0"	TYPE	JACK

Job: (20090173) -JOE HART BUILDER INC. -ADDTION / U1

THIS DWG. PREPARED BY THE ALPINE JOB DESIGNER PROGRAM FROM TRUSS MFR'S LAYOUT

Top chord 2x4 SP #2
Bot chord 2x4 SP #2
Webs 2x4 SP #3 :W1 2x6 SP #2 Dense:

Bottom chord checked for 10.00 psf non-concurrent live load.

Deflection meets L/240 live and L/180 total load.

Calculated vertical deflection is -0.01" due to live load at X = 0-0-0 and -0.02" due to total load at X = 0-0-0. L/240 live and L/180 total load.

140 mph wind, 19.35 ft mean hgt, ASCE 7-02, CLOSED bldg, Located anywhere on roof, CAT II, EXP C, wind TC DL=5.0 psf, wind BC DL=5.0 psf, Iw=1.00 GCpi(+/-)=0.18

Component and cladding wind pressures considered for uplift reaction.

Calculated vertical deflection is 0.07" due to live load and 0.13" due to total load at X = 7-1-0.

All wind load cases on this truss have a 1.33 duration factor.

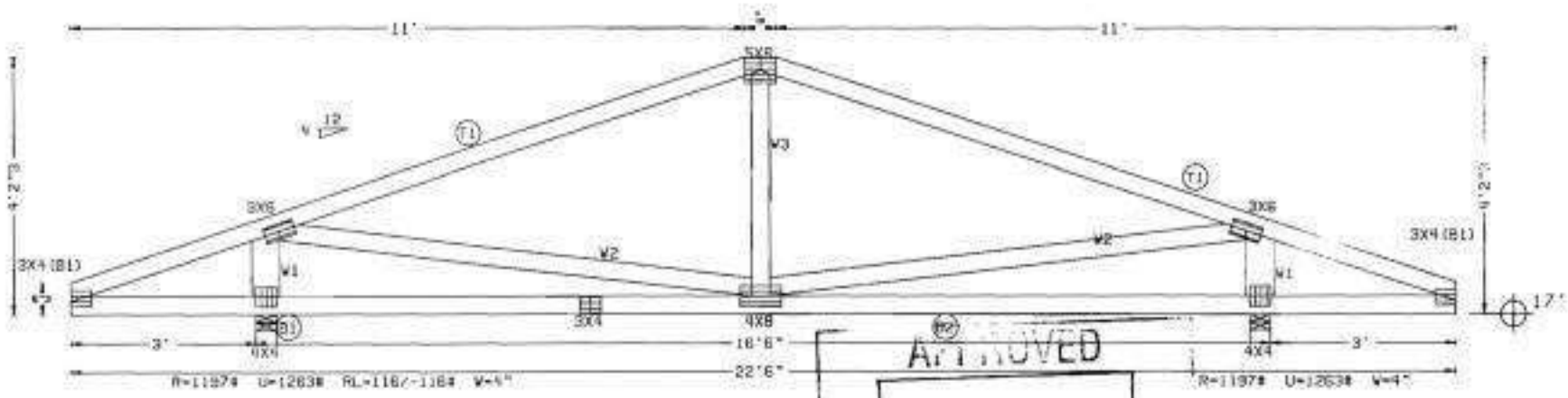

APPROVED

APR 13 2009

CITY OF HOLLYWOOD, FLA.

TAG = T22
PLT. TYP.-WAVE

DESIGN CRIT=FBC2004/WHZ/TPI-2002 FT/RT=20#(0#)/10(0)

QTY= 2 TOTAL= 2

REV. 6.07.00.1218.

SEQ = 20[illegible]
SCALE =0.3595

Custom Designed Truss Co.
777 S.W. 12th Avenue
Pompano Beach, FL 33069
Phone 954-786-8950
Fax 954-786-8604

WARNING TRUSSES REQUIRE EXTREME CARE IN FABRICATING, HANDLING, SHIPPING, INSTALLING AND BRACING. REFER TO BCSI 1-03 (BUILDING COMPONENT SAFETY INFORMATION), PUBLISHED BY TPI (TRUSS PLATE INSTITUTE, 583 D'ONOFRIO DR., SUITE 200, MADISON, WI 53719) AND WTCA (WOOD TRUSS COUNCIL OF AMERICA, 6300 ENTERPRISE LN, MADISON, WI 53719) FOR SAFETY PRACTICES PRIOR TO PERFORMING THESE FUNCTIONS. UNLESS OTHERWISE INDICATED, TOP CHORD SHALL HAVE PROPERLY ATTACHED STRUCTURAL PANELS AND BOTTOM CHORD SHALL HAVE A PROPERLY ATTACHED RIGID CEILING.

IMPORTANT FURNISH COPY OF THIS DESIGN TO INSTALLATION CONTRACTOR. ALPINE ENGINEERED PRODUCTS, INC., SHALL NOT BE RESPONSIBLE FOR ANY DEVIATION FROM THIS DESIGN; ANY FAILURE TO BUILD THE TRUSS IN CONFORMANCE WITH TPI; OR FABRICATING, HANDLING, SHIPPING, INSTALLING & BRACING OF TRUSSES. DESIGN CONFORMS WITH APPLICABLE PROVISIONS OF NDS (NATIONAL DESIGN SPEC, BY AF&PA) AND TPI. ALPINE CONNECTOR PLATES ARE MADE OF 20/18/16GA (W,H/S/K) ASTM A653 GRADE 40/60 (W,K/H,S) GALV. STEEL. APPLY PLATES TO EACH FACE OF TRUSS AND, UNLESS OTHERWISE LOCATED ON THIS DESIGN, POSITION PER DRAWINGS 16DA-Z. ANY INSPECTION OF PLATES FOLLOWED BY (1) SHALL BE PER ANNEX A3 OF TPI 1-2002 SEC. 3. A SEAL ON THIS DRAWING INDICATES ACCEPTANCE OF PROFESSIONAL ENGINEERING RESPONSIBILITY SOLELY FOR THE TRUSS COMPONENT DESIGN SHOWN. THE SUITABILITY AND USE OF THIS COMPONENT FOR ANY BUILDING IS THE RESPONSIBILITY OF THE BUILDING DESIGNER, PER ANSI/TPI 1 SEC. 2.

Morris A. Shoshoua, P.E.
MAURICE A. SHOSHOUA, P.E., INC
1909 NW 112 AVE.
CORAL SPRINGS, FL. 33071
(954) 753-1999
LICENSE Nos.E85251 & 19554

TC LL	30.0psf	REF	
TC DL	15.0psf	DATE	04-02-2009
BC DL	10.0psf	DRWG	
BC LL	0.0psf		JA
TOT.LD.	55.0psf	O/A LEN.	220600
DUR.FAC.	1.33	JOB #:	20090173
SPACING	24.0"	TYPE	SPEC

Job: (20090173) -JOE HART BUILDER INC. -ADDTION / UG1

THIS DWG. PREPARED BY THE ALPINE JOB DESIGNER PROGRAM FROM TRUSS MFR'S LAYOUT

Top chord 2x4 SP #2 :T2 2x6 SP #2 Dense:
Bot chord 2x6 SP #2 Dense
Webs 2x4 SP #3 :W1 2x6 SP #2 Dense:

In lieu of structural panels use purlins to brace all flat TC @ 24" OC.

Left side jacks have 9-0-0 setback with 3-0-0 cant and 0-0-0 overhang. End jacks have 9-0-0 setback with 3-0-0 cant and 0-0-0 overhang. Right side jacks have 9-0-0 setback with 3-0-0 cant and 0-0-0 overhang.

Deflection meets L/240 live and L/180 total load.

All wind load cases on this truss have a 1.33 duration factor.

140 mph wind, 19.02 ft mean hgt, ASCE 7-02, CLOSED bldg, Located anywhere in roof, CAT II, EXP C, wind TC DL=5.0 psf, wind BC DL=5.0 psf, Iw=1.00 GCpi(+/-)=0.18

Wind reactions based on MWFRS pressures.

#1 hip supports 9-0-0 jacks W/2 panel TC and no end vert.

Calculated vertical deflection is 0.03" due to live load and 0.06" due to total load at X = 8-8-8.

Calculated vertical deflection is 0.03" due to live load at X = 8-8-8 due to total load at X = 8-8-8. L/240 live and L/180 total load.

Uplifts based on a building width of 12.82 ft and a length of 0.00 ft.

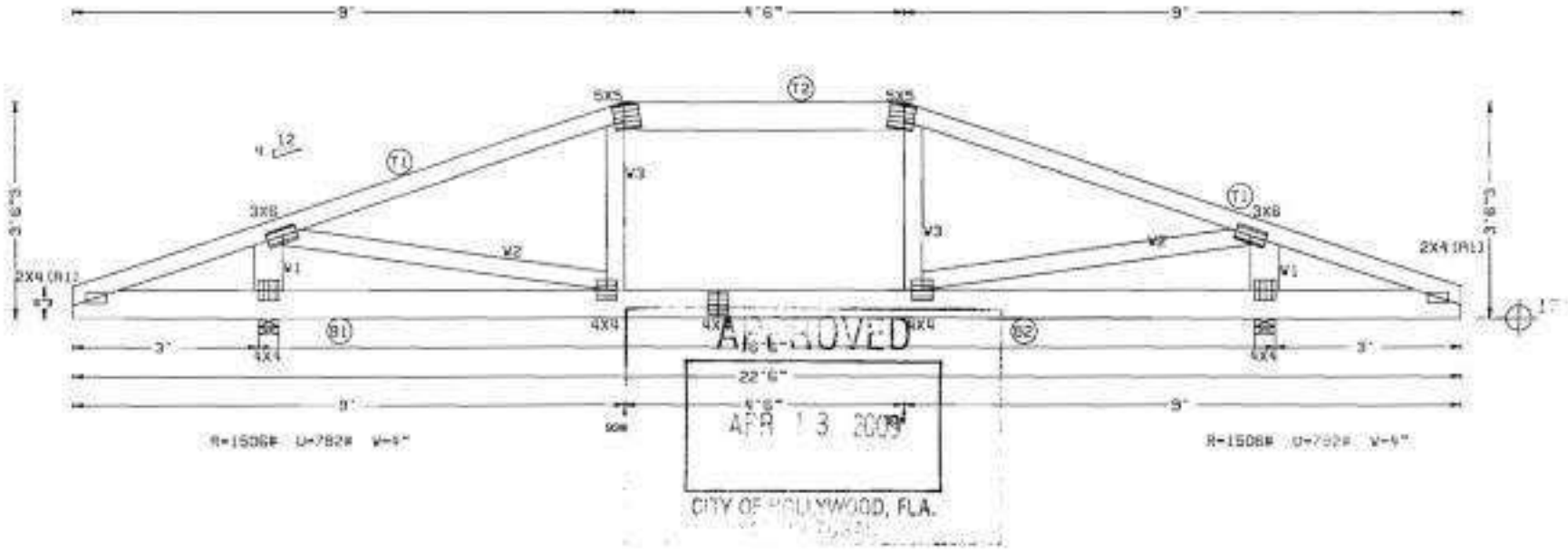

TAG = T13
PLT. TYP.-WAVE

DESIGN CRIT=FBC2004HVHZ/TPI-2002 FT/RT=20%(DA)/10(0)

QTY= 2 TOTAL= 2

REV. 8.07.00.1218. SCALE =0.3595

SEQ = 201955

Custom Designed Truss Co.
777 S.W. 12th Avenue
Pompano Beach, FL 33063
Phone 954-786-8800
Fax 954-786-8804

WARNING TRUSSES REQUIRE EXTREME CARE IN FABRICATING, HANDLING, SHIPPING, INSTALLING AND BRACING. REFER TO BCSI 1-03 (BUILDING COMPONENT SAFETY INFORMATION), PUBLISHED BY TPI (TRUSS PLATE INSTITUTE, 583 D'ONOFRIO DR., SUITE 200, MADISON, WI. 53719) AND WTCA (WOOD TRUSS COUNCIL OF AMERICA, 6300 ENTERPRISE LN, MADISON, WI. 53719) FOR SAFETY PRACTICES PRIOR TO PERFORMING THESE FUNCTIONS. UNLESS OTHERWISE INDICATED, TOP CHORD SHALL HAVE PROPERLY ATTACHED STRUCTURAL PANELS AND BOTTOM CHORD SHALL HAVE A PROPERLY ATTACHED RIGID CEILING.
IMPORTANT FURNISH COPY OF THIS DESIGN TO INSTALLATION CONTRACTOR. ALPINE ENGINEERED PRODUCTS, INC., SHALL NOT BE RESPONSIBLE FOR ANY DEVIATION FROM THIS DESIGN; ANY FAILURE TO BUILD THE TRUSS IN CONFORMANCE WITH TPI; OR FABRICATING, HANDLING, SHIPPING, INSTALLING & BRACING OF TRUSSES. DESIGN CONFORMS WITH APPLICABLE PROVISIONS OF NDS (NATIONAL DESIGN SPEC. BY AF&PA) AND TPI. ALPINE CONNECTOR PLATES ARE MADE OF 20/18/16GA (W,H/S/K) ASTM A653 GRADE 40/60 (W,H/H,S) GALV. STEEL. APPLY PLATES TO EACH FACE OF TRUSS AND, UNLESS OTHERWISE LOCATED ON THIS DESIGN, POSITION PER DRAWINGS 160A-Z. ANY INSPECTION OF PLATES FOLLOWED BY (1) SHALL BE PER ANNEX A3 OF TPI 1-2002 SEC. 3. A SEAL ON THIS DRAWING INDICATES ACCEPTANCE OF PROFESSIONAL ENGINEERING RESPONSIBILITY SOLELY FOR THE TRUSS COMPONENT DESIGN SHOWN. THE SUITABILITY AND USE OF THIS COMPONENT FOR ANY BUILDING IS THE RESPONSIBILITY OF THE BUILDING DESIGNER, PER ANSI/TPI 1 SEC. 2.

Morris A. Shashoua, P.E.
MAURICE A. SHASHOUA, P.E., INC
1908 NW 112 AVE.
CORAL SPRINGS, FL. 33071
(954) 753-1988
LICENSE Nos.E55251 & 15554

TC LL	30.0psf	REF	
TC DL	15.0psf	DATE	04-02-2009
BC DL	10.0psf	DRWG	
BC LL	0.0psf		JA
TOT.LD.	55.0psf	O/A LEN.	220600
DUR.FAC.	1.33	JOB #:	20090173
SPACING	24.0"	TYPE	HIPS

Job: (20090173) -JOE HART BUILDER INC. -ADDTION / UEJ9

THIS DWG. PREPARED BY THE ALPINE JOB DESIGNER PROGRAM FROM TRUSS MFR'S LAYOUT

Top chord 2x4 SP #2
Bot chord 2x4 SP #2
Webs 2x6 SP #2 Dense

Bottom chord checked for 10.00 psf non-concurrent live load.

Deflection meets L/240 live and L/180 total load.

Calculated vertical deflection is 0.21" due to live load at X = 0-0-0 and 0.35" due to total load at X = 0-0-0. L/240 live and L/180 total load.

140 mph wind, 19.02 ft mean hgt, ASCE 7-02, CLOSED bldg, Located anywhere in roof, CAT II, EXP C, wind TC DL=5.0 psf, wind BC DL=5.0 psf, Iw=1.00
GCpi(+/-)=0.18

Component and cladding wind pressures considered for uplift reactions.

Calculated vertical deflection is 0.21" due to live load and 0.35" due load at X = 0-0-0.

All wind load cases on this truss have a 1.33 duration factor.

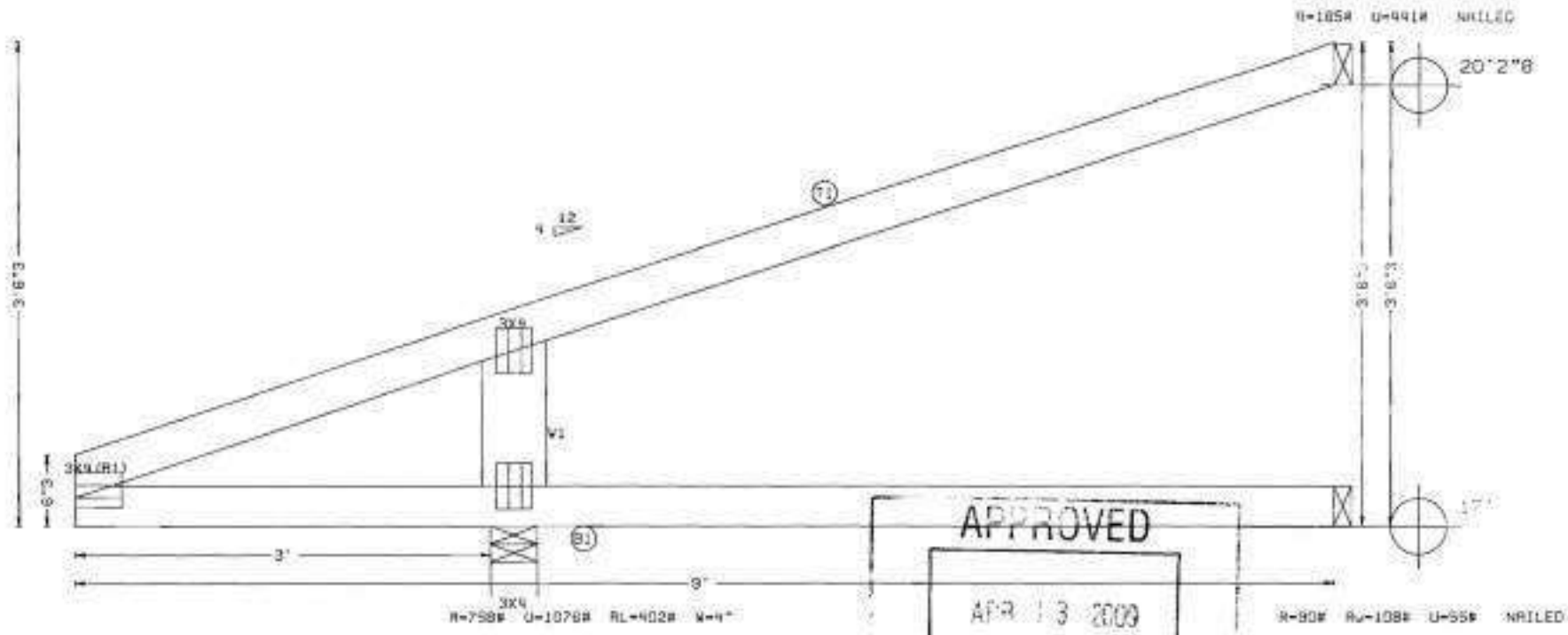

APPROVED
APR 13 2009
CITY OF HOLLYWOOD, FLA.
STRUCTURAL

TAG = T19
PLT. TYP.-WAVE

DESIGN CRIT=FBC2004HH2/TPI-2002 FT/RT=20(10)/10(0)

QTY= 8 TOTAL= 8

REV. 8.07.00.1218. SEQ = 20143
SCALE =0.83

Custom Designed Truss Co.
777 S.W. 12th Avenue
Pompano Beach, FL 33069
Phone: 954-786-8800
Fax: 954-786-8804

WARNING TRUSSES REQUIRE EXTREME CARE IN FABRICATING, HANDLING, SHIPPING, INSTALLING AND BRACING. REFER TO BCSI 1-03 (BUILDING COMPONENT SAFETY INFORMATION), PUBLISHED BY TPI (TRUSS PLATE INSTITUTE, 583 D'ONOFRIO DR., SUITE 200, MADISON, WI. 53719) AND WTCA (WOOD TRUSS COUNCIL OF AMERICA, 6300 ENTERPRISE LN, MADISON, WI 53719) FOR SAFETY PRACTICES PRIOR TO PERFORMING THESE FUNCTIONS. UNLESS OTHERWISE INDICATED, TOP CHORD SHALL HAVE PROPERLY ATTACHED STRUCTURAL PANELS AND BOTTOM CHORD SHALL HAVE A PROPERLY ATTACHED RIGID CEILING.
IMPORTANT FURNISH COPY OF THIS DESIGN TO INSTALLATION CONTRACTOR. ALPINE ENGINEERED PRODUCTS, INC., SHALL NOT BE RESPONSIBLE FOR ANY DEVIATION FROM THIS DESIGN; ANY FAILURE TO BUILD THE TRUSS IN CONFORMANCE WITH TPI1 OR FABRICATING, HANDLING, SHIPPING, INSTALLING & BRACING OF TRUSSES. DESIGN CONFORMS WITH APPLICABLE PROVISIONS OF NDS (NATIONAL DESIGN SPEC. BY AF&PA) AND TPI. ALPINE CONNECTOR PLATES ARE MADE OF 20/18/16GA (W,H/S/K) ASTM A653 GRADE 40/60 (W,H/H,S) GALV. STEEL. APPLY PLATES TO EACH FACE OF TRUSS AND, UNLESS OTHERWISE LOCATED ON THIS DESIGN, POSITION PER DRAWINGS 16DA-Z. ANY INSPECTION OF PLATES FOLLOWED BY (1) SHALL BE PER ANNEX A3 OF TPI 1-2002 SEC. 3. A SEAL ON THIS DRAWING INDICATES ACCEPTANCE OF PROFESSIONAL ENGINEERING RESPONSIBILITY SOLELY FOR THE TRUSS COMPONENT DESIGN SHOWN. THE SUITABILITY AND USE OF THIS COMPONENT FOR ANY BUILDING IS THE RESPONSIBILITY OF THE BUILDING DESIGNER, PER ANSI/TPI 1 SEC. 2.

Morris A. Shashoua, P.E.
MAURICE A. SHASHOUA, P.E., INC
1908 NW 112 AVE.
CORAL SPRINGS, FL. 33071
(954) 753-1988
LICENSE Nos. 6852G1 & 18554

TC LL	30.0psf	REF	
TC DL	15.0psf	DATE	04-02-2009
BC DL	10.0psf	DRWG	
BC LL	0.0psf		JF
TOT.LD.	55.0psf	O/A LEN.	9
DUR.FAC.	1.33	JOB #:	20090173
SPACING	24.0"	TYPE	EJACK

Job:(20090173) -JOE HART BUILDER INC. -ADDTION / UHJ9

THIS DWG. PREPARED BY THE ALPINE JOB DESIGNER PROGRAM FROM TRUSS MFR'S LAYOUT

Top chord 2x4 SP #2
Bot chord 2x4 SP #2
Webs 2x4 SP #3 :W1 2x6 SP #2 Dense:

(J) hanger connection not found in inventory file for this condition. Provide connection.

The following members need concentrated loads at the heel: 7-0-0 span/setback member on the 2-11-8 cant side requires 153 lbs and the 7-0-0 span/setback member on the 2-11-8 cant side requires 153 lbs.

Calculated vertical deflection is 0.00" due to live load and 0.11" due to total load at X = 9-1-5.

Calculated vertical deflection is -0.06" due to live load at X = 0-0-0 and 0.11" due to total load at X = 0-0-0. L/240 live and L/180 total load.

140 mph wind, 19.01 ft mean hgt, ASCE 7-02, CLOSED bldg, Located angul... roof, CAT II, EXP C, wind TC DL=5.0 psf, wind BC DL=5.0 psf. Iw=1.00 GCp:(+/-)=0.18

Wind reactions based on MWFRS pressures.

Right end vertical not exposed to wind pressure.

Sub-fascia beam assumptions: 7-0-0 sub-fascia beam on the 2-11-8 cantilever side. 7-0-0 sub-fascia beam on the 2-11-8 cantilever side.

Hipjack supports 8-11-8 setback jacks with 2-11-8 cantilever one face: 2-11-8 cantilever opposite face.

Deflection meets L/240 live and L/180 total load.

All wind load cases on this truss have a 1.33 duration factor.

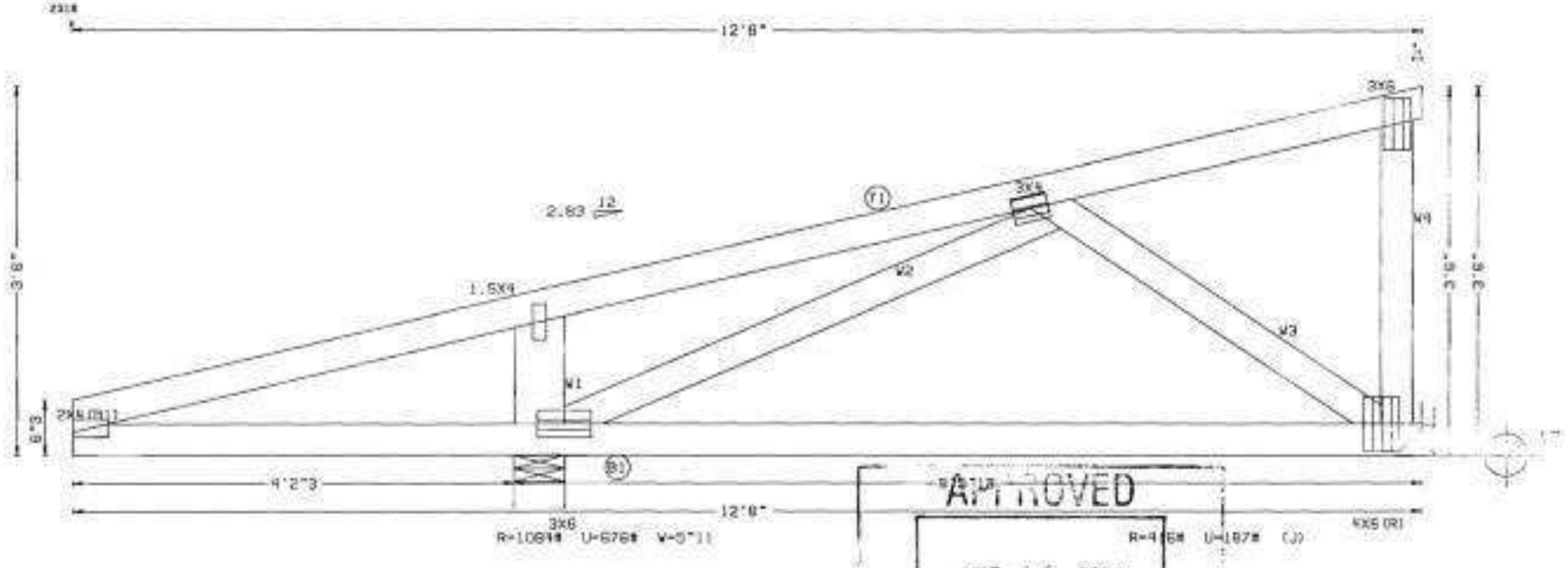

APPROVED
APR 13 2009
CITY OF HOLLYWOOD, FLA.

TAG = T16
PLT. TYP.-WAVE

DESIGN CRIT=FBC2004/WAVE/TPI-2002 FT/RT=20#(DR)/10(D)

QTY= 4 TOTAL= 4

REV. 8.07.00.1218. SCALE =0.6367

Custom Designed Truss Co.
777 S.W. 12th Avenue
Pompano Beach, FL 33069
Phone 954-786-8500
Fax 954-786-8884

WARNING TRUSSES REQUIRE EXTREME CARE IN FABRICATING, HANDLING, SHIPPING, INSTALLING AND BRACING. REFER TO BCSI 1-02 (BUILDING COMPONENT SAFETY INFORMATION), PUBLISHED BY TPI (TRUSS PLATE INSTITUTE, 583 D'UNDRIO DR., SUITE 200, MADISON, WI. 53718) AND WTCA (WOOD TRUSS COUNCIL OF AMERICA, 6300 ENTERPRISE LN, MADISON, WI 53719) FOR SAFETY PRACTICES PRIOR TO PERFORMING THESE FUNCTIONS. UNLESS OTHERWISE INDICATED, TOP CHORD SHALL HAVE PROPERLY ATTACHED STRUCTURAL PANELS AND BOTTOM CHORD SHALL HAVE A PROPERLY ATTACHED RIGID CEILING.
IMPORTANT FURNISH COPY OF THIS DESIGN TO INSTALLATION CONTRACTOR. ALPINE ENGINEERED PRODUCTS, INC., SHALL NOT BE RESPONSIBLE FOR ANY DEVIATION FROM THIS DESIGN: ANY FAILURE TO BUILD THE TRUSS IN CONFORMANCE WITH TPI: OR FABRICATING, HANDLING, SHIPPING, INSTALLING & BRACING OF TRUSSES. DESIGN CONFORMS WITH APPLICABLE PROVISIONS OF NDS (NATIONAL DESIGN SPEC. BY AF&PA) AND TPI. ALPINE CONNECTOR PLATES ARE MADE OF 20/18/16GA (W,H/S/K) ASTM A653 GRADE 40/60 (W,K/H,S) GALV. STEEL. APPLY PLATES TO EACH FACE OF TRUSS AND, UNLESS OTHERWISE LOCATED ON THIS DESIGN, POSITION PER DRAWINGS 160A-Z. ANY INSPECTION OF PLATES FOLLOWED BY (I) SHALL BE PER ANNEX A3 OF TPI 1-2002 SEC. 3. A SEAL ON THIS DRAWING INDICATES ACCEPTANCE OF PROFESSIONAL ENGINEERING RESPONSIBILITY SOLELY FOR THE TRUSS COMPONENT DESIGN SHOWN. THE SUITABILITY AND USE OF THIS COMPONENT FOR ANY BUILDING IS THE RESPONSIBILITY OF THE BUILDING DESIGNER, PER ANSI/TPI 1 SEC. 2.

Morris A. Shoshoua, P.E.
MAURICE A. SHOSHOUA, P.E., INC
1008 NW 112 AVE.
CORAL SPRINGS, FL. 33071
(954) 752-1988
LICENSE Nos.ERS251 & 18554

TC LL	30.0psf	REF	
TC DL	15.0psf	DATE	04-02-2009
BC DL	10.0psf	DRWG	
BC LL	0.0psf		JA
TOT.LD.	55.0psf	O/A LEN:	120600
DUR.FAC.	1.33	JOB #	20090173
SPACING	24.0"	TYPE	HIP_JACK

Job: (20090173) -JOE HART BUILDER INC. -ADDTION / UJ7

THIS DWG. PREPARED BY THE ALPINE JOB DESIGNER PROGRAM FROM TRUSS MFR'S LAYOUT

Top chord 2x4 SP #2
Bot chord 2x4 SP #2
Webs 2x6 SP #2 Dense

Bottom chord checked for 10.00 psf non-concurrent live load.

Deflection meets L/240 live and L/180 total load.

Calculated vertical deflection is 0.16" due to live load at X = 0-0-0 and 0.29" due to total load at X = 0-0-0. L/240 live and L/180 total load.

140 mph wind, 18.68 ft mean hgt, ASCE 7-02, CLOSED bldg, Located anywhere in roof, CAT II, EXP C, wind TC DL=5.0 psf, wind BC DL=5.0 psf Tc=1.00 GCpi(+/-)=0.18

Component and cladding wind pressures considered for uplift reactions.

Calculated vertical deflection is 0.16" due to live load and 0.29" due to total load at X = 0-0-0.

All wind load cases on this truss have a 1.33 duration factor.

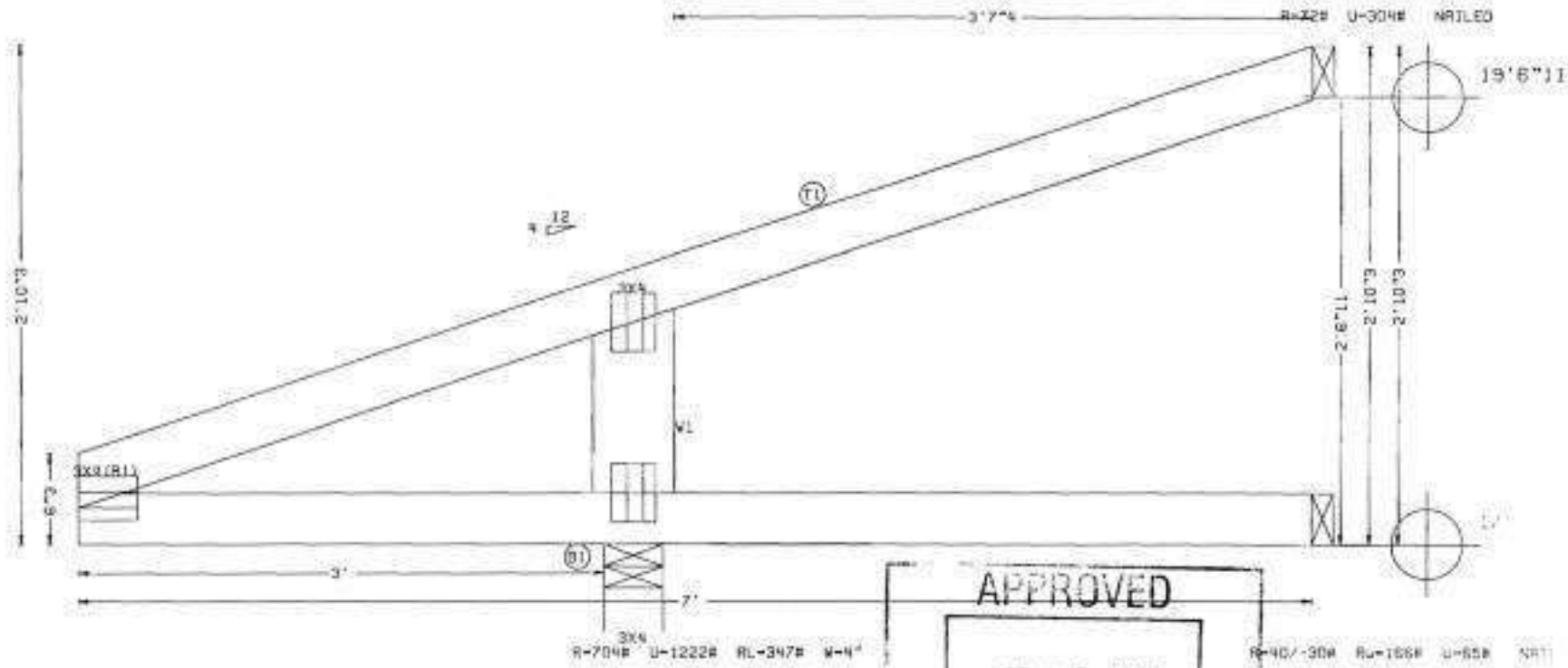

APPROVED
APR 13 2009
CITY OF HOLLYWOOD, FLA.

TAG = T21
PLT. TYP.-WAVE

DESIGN CRIT=FBC2004/WAVE/TPI-2002 FT/RT=20F(0%)/10(0)

QTY= 8 TOTAL= 8

REV. 6.07.00.1218.1

SEQ = 20
SCALE =1.0286

Custom Designed Truss Co.
777 SW 12th Avenue
Pompano Beach, FL 33069
Phone: 954-786-8800
Fax: 954-786-8804

WARNING TRUSSES REQUIRE EXTREME CARE IN FABRICATING, HANDLING, SHIPPING, INSTALLING AND BRACING. REFER TO BCSI 1-03 (BUILDING COMPONENT SAFETY INFORMATION), PUBLISHED BY TPI (TRUSS PLATE INSTITUTE, 583 D'ONOFRIO DR., SUITE 200, MADISON, WI. 53719) AND WTCA (WOOD TRUSS COUNCIL OF AMERICA, 6300 ENTERPRISE LN, MADISON, WI 53719) FOR SAFETY PRACTICES PRIOR TO PERFORMING THESE FUNCTIONS. UNLESS OTHERWISE INDICATED, TOP CHORD SHALL HAVE PROPERLY ATTACHED STRUCTURAL PANELS AND BOTTOM CHORD SHALL HAVE A PROPERLY ATTACHED RIGID CEILING.
IMPORTANT FURNISH COPY OF THIS DESIGN TO INSTALLATION CONTRACTOR. ALPINE ENGINEERED PRODUCTS, INC., SHALL NOT BE RESPONSIBLE FOR ANY DEVIATION FROM THIS DESIGN; ANY FAILURE TO BUILD THE TRUSS IN CONFORMANCE WITH TPI; OR FABRICATING, HANDLING, SHIPPING, INSTALLING & BRACING OF TRUSSES. DESIGN CONFORMS WITH APPLICABLE PROVISIONS OF NDS (NATIONAL DESIGN SPEC. BY AF&PA) AND TPI. ALPINE CONNECTOR PLATES ARE MADE OF 20/18/16GA (W,H/S/K) ASTM A653 GRADE 40/GD (W,K/H,S) GALV. STEEL. APPLY PLATES TO EACH FACE OF TRUSS AND, UNLESS OTHERWISE LOCATED ON THIS DESIGN, POSITION PER DRAWINGS 16DA-Z. ANY INSPECTION OF PLATES FOLLOWED BY (I) SHALL BE PER ANNEX A3 OF TPI 1-2002 SEC. 3. A SEAL ON THIS DRAWING INDICATES ACCEPTANCE OF PROFESSIONAL ENGINEERING RESPONSIBILITY SOLELY FOR THE TRUSS COMPONENT DESIGN SHOWN. THE SUITABILITY AND USE OF THIS COMPONENT FOR ANY BUILDING IS THE RESPONSIBILITY OF THE BUILDING DESIGNER, PER ANSI/TPI 1 SEC. 2.

Morris A. Shepheun, P.E.
MAURICE A. SHASHOUA, P.E., INC
1800 NW 112 AVE.
CORAL SPRINGS, FL. 33071
(954) 753-1988
LICENSE Nos.C85251 & 19934

TC LL	30.0psf	REF	
TC DL	15.0psf	DATE	04-02-2009
BC DL	10.0psf	DRWG	
BC LL	0.0psf		JA
TOT.LD.	55.0psf	O/A LEN.	7
DUR.FAC.	1.33	JOB #:	20090173
SPACING	24.0"	TYPE	JACK

Job:(20090173) -JOE HART BUILDER INC. -ADDTION / UJ5

THIS DWG. PREPARED BY THE ALPINE JOB DESIGNER PROGRAM FROM TRUSS MFR'S LAYOUT

Top chord 2x4 SP #2
Bot chord 2x4 SP #2
Webs 2x6 SP #2 Dense

Bottom chord checked for 10.00 psf non-concurrent live load.

Deflection meets L/240 live and L/180 total load.

Calculated vertical deflection is 0.14" due to live load at X = 0-0-0 and 0.24" due to total load at X = 0-0-0. L/240 live and L/180 total load.

140 mph wind, 18.35 ft mean hgt, ASCE 7-02, CLOSED bldg, Located anywhere in roof, CAT II, EXP C, wind TC DL=5.0 psf, wind BC DL=5.0 psf. Iw=1.00 GCpi(+/-)=0.18

Component and cladding wind pressures considered for uplift locations.

Calculated vertical deflection is 0.14" due to live load and 0.24" due to total load at X = 0-0-0.

All wind load cases on this truss have a 1.33 duration factor.

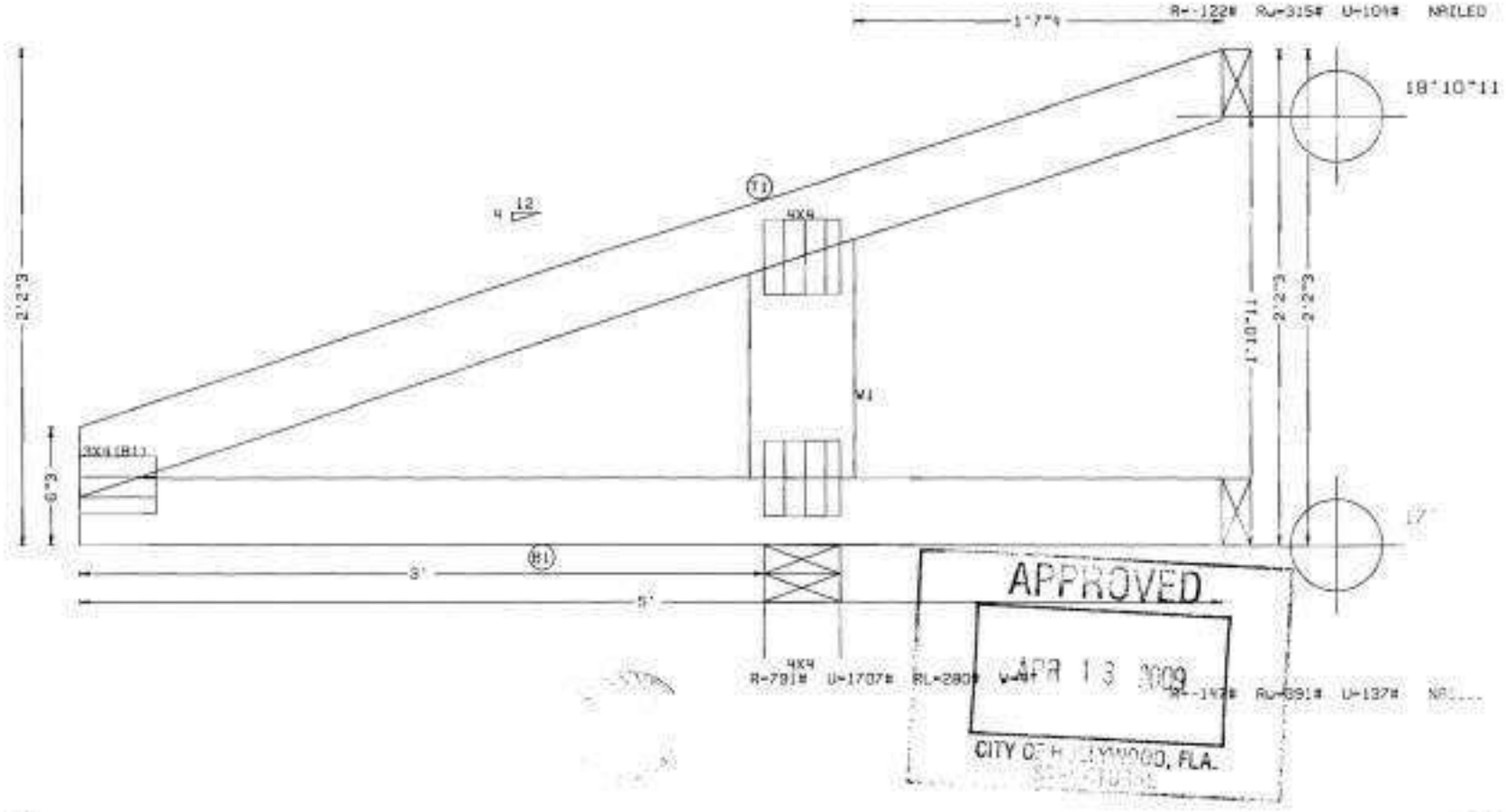

APPROVED
APR 13 2009
CITY OF HOLLYWOOD, FLA.
STRUCTURAL

TAG = T23
PLT. TYP.-WAVE

DESIGN CRIT=FBC2004+AVG/TPI-2002 FT/RT=20F(DF)/10(0)

QTY= 8 TOTAL= 8

REV. 8.07.00.1218.

SEQ = 20 -27
SCALE = 1...

Centre Designed Truss Co.
777 S.W. 12th Avenue
Pompano Beach, FL 33069
Phone 954-786-8500
Fax 954-786-8884

WARNING TRUSSES REQUIRE EXTREME CARE IN FABRICATING, HANDLING, SHIPPING, INSTALLING AND BRACING. REFER TO BCSI 1-03 (BUILDING COMPONENT SAFETY INFORMATION), PUBLISHED BY TPI (TRUSS PLATE INSTITUTE, 583 D'ONOFRIO DR., SUITE 200, MADISON, WI. 53719) AND WTCA (WOOD TRUSS COUNCIL OF AMERICA, 6300 ENTERPRISE LN, MADISON, WI 53719) FOR SAFETY PRACTICES PRIOR TO PERFORMING THESE FUNCTIONS. UNLESS OTHERWISE INDICATED, TOP CHORD SHALL HAVE PROPERLY ATTACHED STRUCTURAL PANELS AND BOTTOM CHORD SHALL HAVE A PROPERLY ATTACHED RIGID CEILING.
IMPORTANT FURNISH COPY OF THIS DESIGN TO INSTALLATION CONTRACTOR. ALPINE ENGINEERED PRODUCTS, INC., SHALL NOT BE RESPONSIBLE FOR ANY DEVIATION FROM THIS DESIGN; ANY FAILURE TO BUILD THE TRUSS IN CONFORMANCE WITH TPI; OR FABRICATING, HANDLING, SHIPPING, INSTALLING & BRACING OF TRUSSES. DESIGN CONFORMS WITH APPLICABLE PROVISIONS OF NDS (NATIONAL DESIGN SPEC. BY AF&PA) AND TPI. ALPINE CONNECTOR PLATES ARE MADE OF 20/18/16GA (W,H/S/M) ASTM A653 GRADE 40/60 (W,K/H,S) GALV. STEEL. APPLY PLATES TO EACH FACE OF TRUSS AND, UNLESS OTHERWISE LOCATED ON THIS DESIGN, POSITION PER DRAWINGS 16GA-Z. ANY INSPECTION OF PLATES FOLLOWED BY (I) SHALL BE PER ANNEX A3 OF TPI 1-2002 SEC. 3. A SEAL ON THIS DRAWING INDICATES ACCEPTANCE OF PROFESSIONAL ENGINEERING RESPONSIBILITY SOLELY FOR THE TRUSS COMPONENT DESIGN SHOWN. THE SUITABILITY AND USE OF THIS COMPONENT FOR ANY BUILDING IS THE RESPONSIBILITY OF THE BUILDING DESIGNER, PER ANSI/TPI 1 SEC. 2.

Morris A. Shoshoua, P.E.
MAURICE A. SHASHOUA, P.E., INC
1908 NW 112 AVE.
CORAL SPRINGS, FL. 33071
(954) 783-1888
LICENSE Nos.EB5261 & 18684

TC LL	30.0psf	REF	
TC DL	15.0psf	DATE	04-02-2009
BC DL	10.0psf	DRWG	
BC LL	0.0psf		JA
TOT.LD.	55.0psf	D/R	LEN. 5
DUR.FAC.	1.33	JOB #:	20090173
SPACING	24.0"	TYPE	JACK

Job: (20090173) -JOE HART BUILDER INC. -ADDITION / UJ3

THIS DWG. PREPARED BY THE ALPINE JOB DESIGNER PROGRAM FROM TRUSS MFR'S LAYOUT

Top chord 2x4 SP #2
Bot chord 2x4 SP #2

** The maximum horizontal reaction is 349# **

Component and cladding wind pressures considered for uplift reactions.

Bottom chord checked for 10.00 psf non-concurrent live load.

Deflection meets L/240 live and L/180 total load.

Calculated vertical deflection is 0.00" due to live load at X = 0-0-15 and 0.01" due to total load at X = 0-0-15. L/240 live and L/180 total load.

SPECIAL LOADS
------DLUMBER DUR.FAC.=1.33 / PLATE DUR.FAC.=1.33)
TC - From 92 PLF at 0.00 to 92 PLF at 3.00
BC - From 8 PLF at 0.00 to 8 PLF at 3.00

140 mph wind, 18.02 ft mean hgt, ASCE 7-02, CLOSED bldg, Located anywhere in roof, CAT II, EXP C, wind TC DL=5.0 psf, wind BC DL=5.0 psf, Iw=1.00 GCpi(+/-)=0.18

Calculated vertical deflection is 0.00" due to live load and 0.01" due to total load at X = 1-6-8.

***** BEARING ANALOG MODIFIED! *****

All wind load cases on this truss have a 1.33 duration factor.

R=260# U=485# Rh=349# RL=236/-548# NAILED

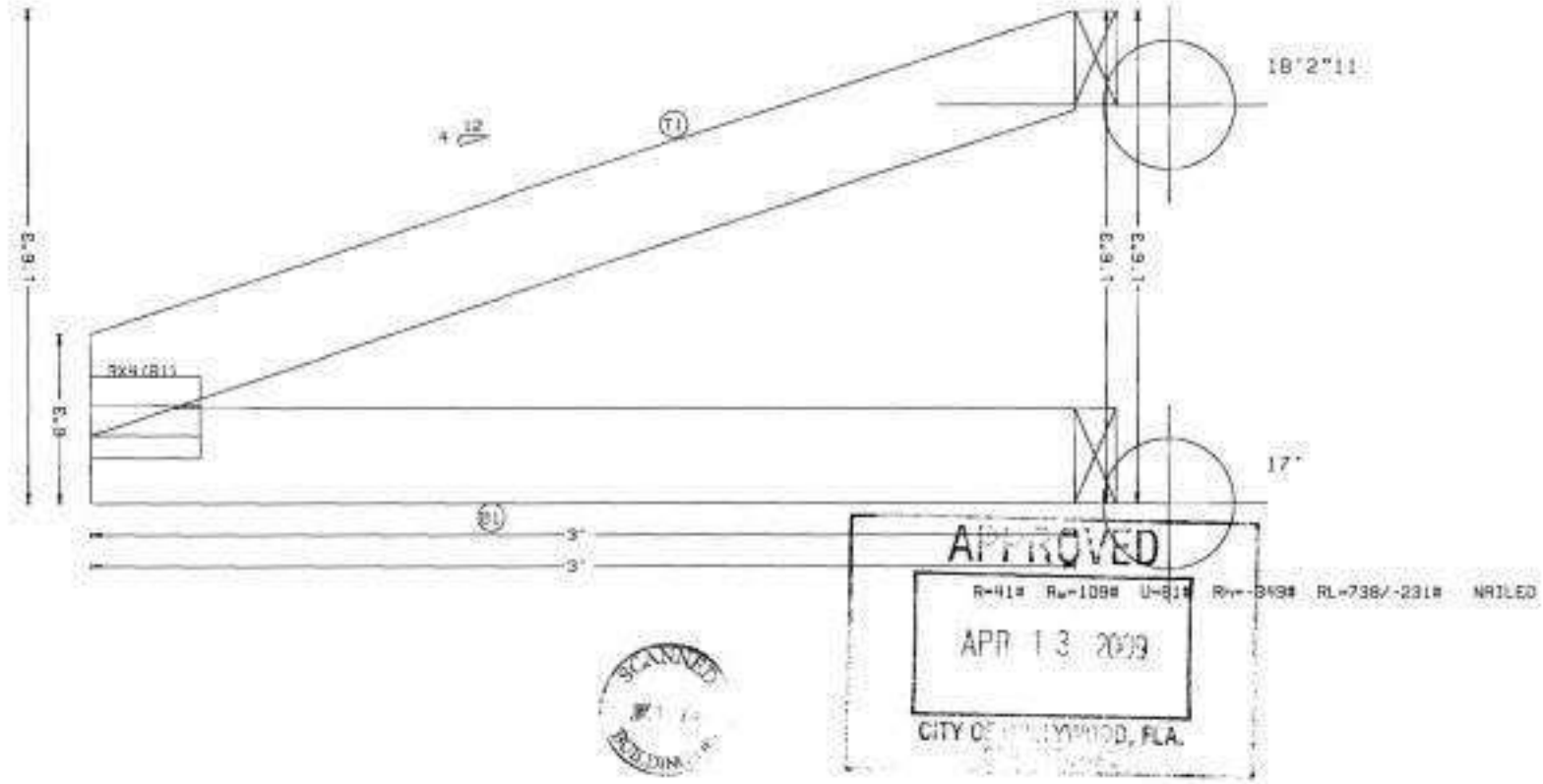

APPROVED
APR 13 2009
CITY OF HOLLYWOOD, FLA.

SCANNED

TAG = T24
PLT. TYP. -WAVE

QTY= 8 TOTAL= 8

REV. 8.07.00.1218. BC

SEQ = 25

DESIGN CRIT=FBC2004&ANSI/TPI 1-2002 FL=RT-20(100)/10.00

WARNING TRUSSES REQUIRE EXTREME CARE IN FABRICATING, HANDLING, SHIPPING, INSTALLING AND BRACING. REFER TO BCSI 1-03 (BUILDING COMPONENT SAFETY INFORMATION) PUBLISHED BY TPI (TRUSS PLATE INSTITUTE, 583 D'ONOFRIO DR.; SUITE 200, MADISON, WI 53719) AND WTCA (WOOD TRUSS COUNCIL OF AMERICA, 6300 ENTERPRISE LN, MADISON, WI 53719) FOR SAFETY PRACTICES PRIOR TO PERFORMING THESE FUNCTIONS. UNLESS OTHERWISE INDICATED, TOP CHORD SHALL HAVE PROPERLY ATTACHED STRUCTURAL PANELS AND BOTTOM CHORD SHALL HAVE A PROPERLY ATTACHED RIGID CEILING.
IMPORTANT FURNISH COPY OF THIS DESIGN TO INSTALLATION CONTRACTOR. ALPINE ENGINEERED PRODUCTS, INC., SHALL NOT BE RESPONSIBLE FOR ANY DEVIATION FROM THIS DESIGN; ANY FAILURE TO BUILD THE TRUSS IN CONFORMANCE WITH TPI; OR FABRICATING, HANDLING, SHIPPING, INSTALLING & BRACING OF TRUSSES. DESIGN CONFORMS WITH APPLICABLE PROVISIONS OF NDS (NATIONAL DESIGN SPEC, BY AF&PA) AND TPI. ALPINE CONNECTOR PLATES ARE MADE OF 20/18/16GA (W,H/S/M) 80ksi A653 GRADE 80/80 G=.9/H=.8) GALV. STEEL. APPLY PLATES TO EACH FACE OF TRUSS AND, UNLESS OTHERWISE LOCATED ON THIS DESIGN, POSITION PER DRAWINGS 100M-2. ANY INSPECTION OF PLATES FOLLOWED BY (1) SHALL BE PER ANNEX A3 OF TPI 1-2002 SEC. 3. A SEAL ON THIS DRAWING INDICATES ACCEPTANCE OF PROFESSIONAL ENGINEERING RESPONSIBILITY SOLELY FOR THE TRUSS COMPONENT DESIGN SHOWN. THE SUITABILITY AND USE OF THIS COMPONENT FOR ANY BUILDING IS THE RESPONSIBILITY OF THE BUILDING DESIGNER, PER ANSI/TPI 1 SEC. 2.

Custom Designed Trusses Co.
7778 W. 12th Avenue
Pompano Beach, FL 33069
Phone 954-786-8800
Fax 954-786-8804

Harold A. Shepherd, P.E.
HAROLD A. SHEPHERD, P.E., INC
1909 SW 112 AVE.
CORAL SPRINGS, FL. 33071
(954) 753-1988
License Nos. FE6231 & 10854

TC LL	30.0psf	REF	
TC DL	15.0psf	DATE	04-02-2009
BC DL	10.0psf	DES'R	
BC LL	0.0psf		JR
TOT.LD.	55.0psf	O/A LEN.	3
DUR.FAC.	1.33	JOB #:	20090173
SPACING	24.0"	TYPE	JACK

Job: (20090173) -JOE HART BUILDER INC. -ADDTION / UJ1

THIS DWG. PREPARED BY THE ALPINE JOB DESIGNER PROGRAM FROM TRUSS MFR'S LAYOUT

Top chord 2x4 SP #2
Bot chord 2x4 SP #2

140 mph wind, 17.68 ft mean hgt, ASCE 7-02, CLOSED bldg, Located anywhere in roof, CAT II, EXP C, wind TC DL=5.0 psf, wind BC DL=5.0 psf, Iw=1.00
GCpi(+/-)=0.18

Component and cladding wind pressures considered for uplift reactions.

Deflection meets L/240 live and L/180 total load.

***** BEARING ANALOG MODIFIED! *****

SPECIAL LOADS
------(LUMBER DUR.FAC.=1.33 / PLATE DUR.FAC.=1.33)
TC - From 92 PLF at 0.00 to 92 PLF at 1.00
BC - From 8 PLF at 0.00 to 8 PLF at 1.00

Bottom chord checked for 10.00 psf non-concurrent live load.

Calculated vertical deflection is 0.00" due to live load and 0.00" due to total load at X = 0-0-15.

Calculated vertical deflection is 0.00" due to live load at X = 0-0-15 and 0.00" due to total load at X = 0-0-15. L/240 live and L/180 total load.

All wind load cases on this truss have a 1.33 duration factor

R=68# U=150# RH=77# RL=52/-166# NAILED

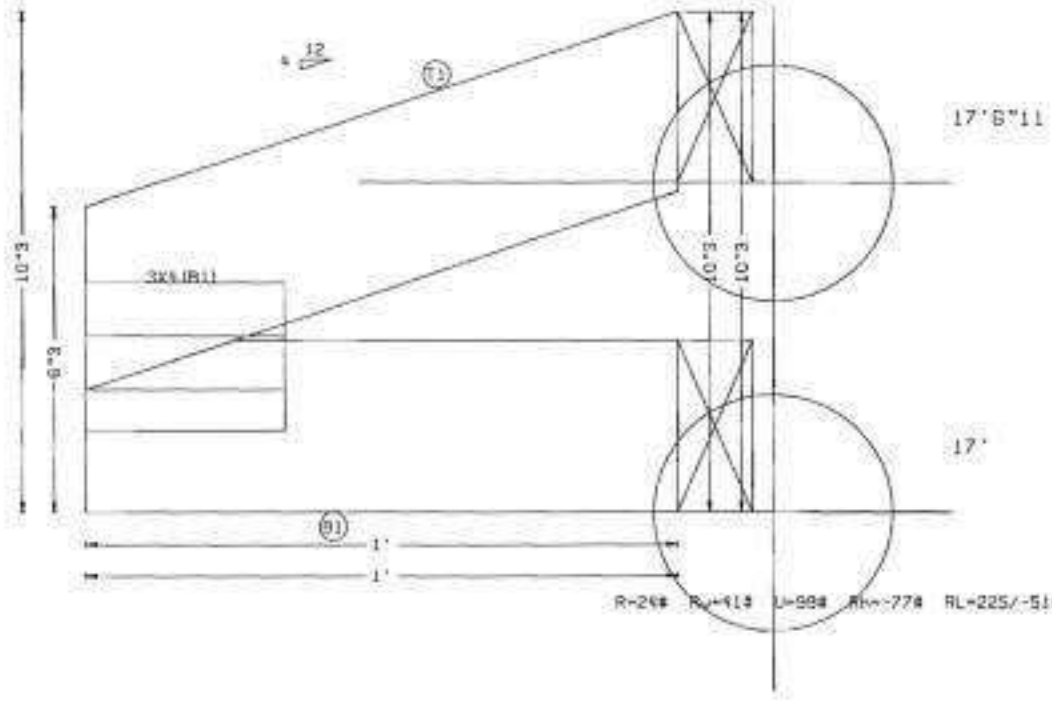

R=24# RU=41# U=98# RH=-77# RL=225/-51# NAILED

APPROVED
APR 13 2009
CITY OF [illegible] YWOOD, FLA.

TAG = T25
PLT. TYP.-WAVE

DESIGN CRIT=FBC2004HVHZ/TPI-2002 FT/RT=20%(DL)/10.00

QTY= 8 TOTAL= 8

REV. 8.07.00.1218. SEQ. [illegible] SCAL. [illegible]

Eastern Designed Truss Co.
777 S.W. 12th Avenue
Pompano Beach, FL 33069
Phone 954-786-8800
Fax 954-786-8804

WARNING TRUSSES REQUIRE EXTREME CARE IN FABRICATING, HANDLING, SHIPPING, INSTALLING AND BRACING. REFER TO BCSI 1-03 (BUILDING COMPONENT SAFETY INFORMATION), PUBLISHED BY TPI (TRUSS PLATE INSTITUTE, 583 D'ONOFRIO DR., SUITE 200, MADISON, WI. 53719) AND WTCA (WOOD TRUSS COUNCIL OF AMERICA, 6300 ENTERPRISE LN, MADISON, WI 53719) FOR SAFETY PRACTICES PRIOR TO PERFORMING THESE FUNCTIONS. UNLESS OTHERWISE INDICATED, TOP CHORD SHALL HAVE PROPERLY ATTACHED STRUCTURAL PANELS AND BOTTOM CHORD SHALL HAVE A PROPERLY ATTACHED RIGID CEILING.
IMPORTANT FURNISH COPY OF THIS DESIGN TO INSTALLATION CONTRACTOR. ALPINE ENGINEERED PRODUCTS, INC., SHALL NOT BE RESPONSIBLE FOR ANY DEVIATION FROM THIS DESIGN; ANY FAILURE TO BUILD THE TRUSS IN CONFORMANCE WITH TPI; OR FABRICATING, HANDLING, SHIPPING, INSTALLING & BRACING OF TRUSSES. DESIGN CONFORMS WITH APPLICABLE PROVISIONS OF NDS (NATIONAL DESIGN SPEC. BY AF&PA) AND TPI. ALPINE CONNECTOR PLATES ARE MADE OF 20/18/16GA (W,H/S/K) ASTM A653 GRADE 40/60 (W,H/K,S) GALV. STEEL. APPLY PLATES TO EACH FACE OF TRUSS AND, UNLESS OTHERWISE LOCATED ON THIS DESIGN, POSITION PER DRAWINGS 160A-Z. ANY INSPECTION OF PLATES FOLLOWED BY (I) SHALL BE PER ANNEX A3 OF TPI 1-2002 SEC. 3. A SEAL ON THIS DRAWING INDICATES ACCEPTANCE OF PROFESSIONAL ENGINEERING RESPONSIBILITY SOLELY FOR THE TRUSS COMPONENT DESIGN SHOWN. THE SUITABILITY AND USE OF THIS COMPONENT FOR ANY BUILDING IS THE RESPONSIBILITY OF THE BUILDING DESIGNER, PER ANSI/TPI 1 SEC. 2.

Morris A. Shoshoua, P.E.
MAURICE A. SHASHOUA, P.E., INC
1808 NW 112 AVE.
CORAL SPRINGS, FL. 33071
(954) 753-1988
LICENSE Nos.[illegible] & [illegible]

TC LL	30.0psf	REF	
TC DL	15.0psf	DATE	04-02-2009
BC DL	10.0psf	DRWG	
BC LL	0.0psf		JA
TOT.LD.	55.0psf	O/A LEN.	1
DUR.FAC.	1.33	JOB #:	20090173
SPACING	24.0"	TYPE	JACK

USP Lumber Connectors™
A GIBRALTAR COMPANY

Plated Truss Installation Guide

General Notes

This installation guide lists the most common USP plated truss installations. Refer to USP's current *Full Line Catalog* for detailed hanger information and additional installation options. Consult the plated truss fabricator for information concerning the use of their products. *USP Lumber Connectors™ does not express, and will not accept, responsibility for any wood component including, but not limited to, bearing blocks and backing blocks.*

Use proper safety equipment during connector installations. Always wear gloves when handling connectors.

The type and quantity of fasteners used to install USP products is critical to connector performance. To achieve the allowable loads, install with the fasteners specified.

Drill bolt holes a minimum of 1/32" and a maximum of 1/16" larger than the diameter of the bolt to be installed (per the 1997 NDS®, Section 8.1.2.1).

Washers should always be used under the head of a bolt or nut when not in contact with the connector, unless noted otherwise.

It is permissible to use nail guns to install connectors, provided the specified nails are installed through prepunched nail holes and all nail holes are filled. Refer to USP Technical Bulletins; **USP829-011** – *Halsteel*, **USP812-012** – *Paslode*, and **USP814-011** – *Senco*, for specific instructions. USP recommends the use of nail guns featuring hole-locating mechanisms. **Caution:** *Always follow nail gun manufacturer's safety guidelines.*

Joists installed in hangers shall bear fully on the connector seat and shall be cut to fit against the header with a gap no greater than 1/8" between the joist end and header face.

Multiple ply members must be fastened securely together to act as one unit.

Nails

USP Stock No.	Ref. No.	Description	Finish[1]	Wire Gauge	Nail Diameter	Length
NA11	N8	8d x 1-1/2	HDG	--	0.131	1-1/2
--	--	8d Common	Bright	10-1/4 ga.	0.131	2-1/2
NA9D	N10	10d x 1-1/2	HDG	--	0.148	1-1/2
--	--	10d Common	Bright	9 ga.	0.148	3
--	--	16d Sinker	Bright	9 ga.	0.148	3-1/4
NA16D	N16	16d x 2-1/2	HDG	--	0.162	2-1/2
--	--	16d Common	Bright	8 ga.	0.162	3-1/2

1) HDG = Hot-Dip Galvanized; Bright = No Finish

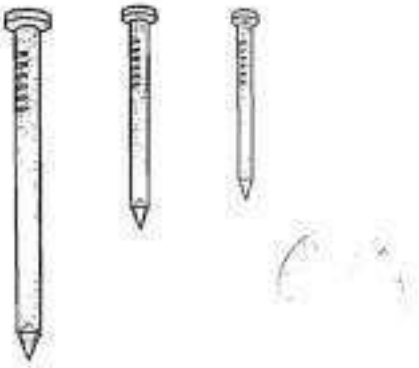

Wood Screw

USP Stock No.	Ref. No.	Description	Finish[1]	Dimensions L	SH	T
WS3	SDS1/4x3	1/4" x 3" Wood Screw	Zinc	3"	3/4"	2-1/4"

1) Zinc= Yellow zinc dichromate.

Codes: ICBO 5634, L.A. City RR 25433

Refer to USP Technical Bulletin, **USP838-013** – *WS Series Wood Screw Applications*, for information on joining 2, 3, or 4 Ply Wood Trusses.



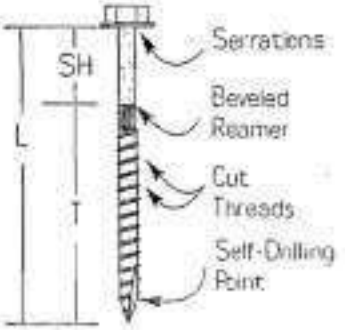

USP supplies quality products for building Stronger Safer Structures

San Francisco Office
Minneapolis Corporate Office
1-800-328-5934
Tampa Office
1-800-443-6442

USP Lumber Connectors™

Floor Truss Hangers

MSH series Adjustable Strap Hangers

Carried Member	USP Stock No.	Ref. No.	Fastener Schedule: Carrying Member Header Top	Fastener Schedule: Carrying Member Header Face	Fastener Schedule: Carried Member Truss
Maximum Nailing[1]					
1 Ply	MSH418	THA418	--	(18) 10d	(6) 10d
	MSH422	THA422	--	(22) 10d	(6) 10d
	MSH422IF	THAC422	--	(22) 10d	(4) 10d
2 Ply	MSH422-2	THA422-2	--	(26) 16d	(6) 16d
	MSH422-2IF	THAC422-2	--	(26) 16d	(6) 16d
Minimum Nailing[2]					
1 Ply	MSH418	THA418	(4) 10d	(2) 10d	(6) 10d
	MSH422	THA422	(4) 10d	(2) 10d	(6) 10d
	MSH422IF	THAC422	(4) 10d	(2) 10d	(4) 10d
	MSH426	THA426	(4) 16d	(2) 16d	(6) 16d
2 Ply	MSH422-2	THA422-2	(4) 16d	(4) 16d	(6) 16d
	MSH422-2IF	THAC422-2	(4) 16d	(4) 16d	(6) 16d

1) **Maximum Nailing** - All face nails must be used. Double shear nailing required through the truss into header for applicable models.

2) **Minimum Nailing** - The hanger is installed in a top mount condition with at least the top two header face nail holes filled, and four top flange nail holes filled. Drive double shear nails in straight.

Some model designs may vary from illustrations shown

Codes:
NER 530
ICBO 5700
L.A. City RR 25337
Patents: #5,217,317

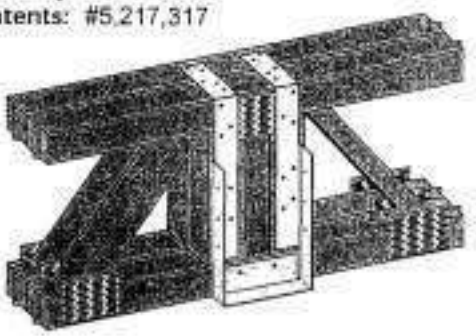

Typical **MSH422-2IF** installation
Top Mount Minimum

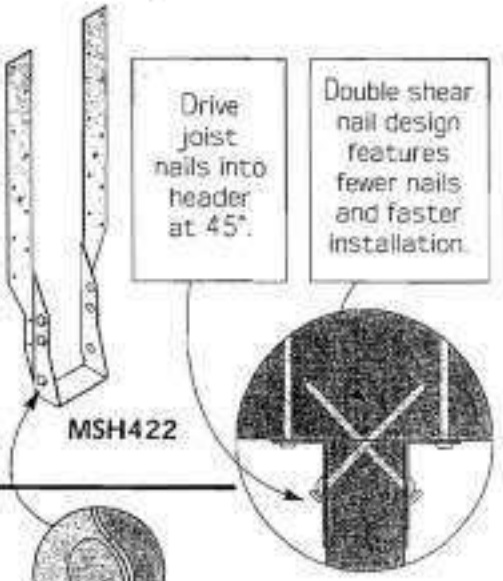

HUS410 & THD410 Hangers

USP Stock No.	Ref. No.	Fastener Schedule: Carrying Member Header	Fastener Schedule: Carried Member Truss
HUS410	HUS410	(8) 16d	(8) 16d
THD410	HHUS410	(38) 16d	(20) 10d

Codes:
NER 478
NER 608
ICBO 5684
ICBO 5441
L.A. City RR 25361
L.A. City RR 25283

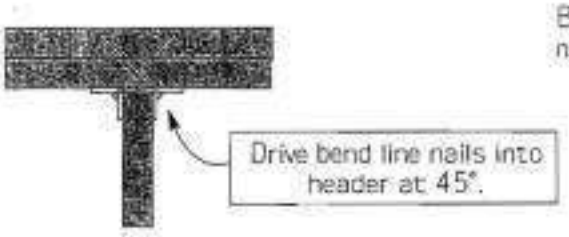

Bend Line Nailing

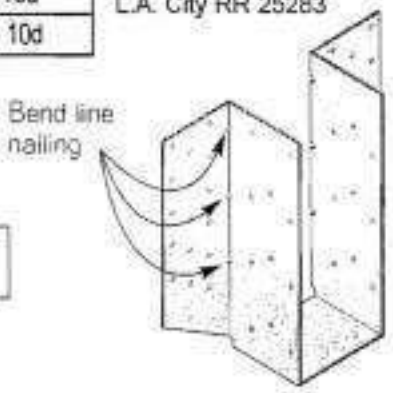

THD410

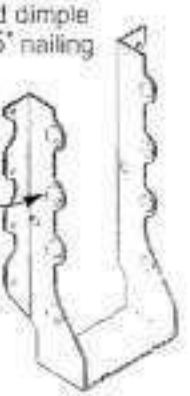

HUS410

Patents: #5,217,317

©Copyright 2002 United Steel Products Company

USP Lumber Connectors™

Truss to Wall Connectors

TR series Roof Truss Ties

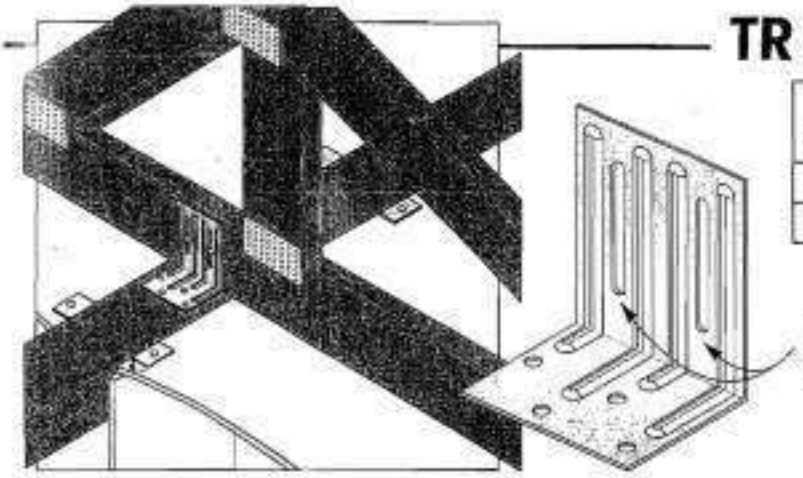

Typical **TR2** installation

TR2
(**TR1** similar)

USP Stock No.	Ref. No.	Fastener Schedule	
		Truss	Plate
TR1	STC	(1) 8d	(2) 8d
TR2	DTC	(2) 8d	(4) 8d

1½" slots allow for truss float. Do Not fully seat nails into truss when installing. Locate nails into the center of slots.

STC series Scissors Truss Clips

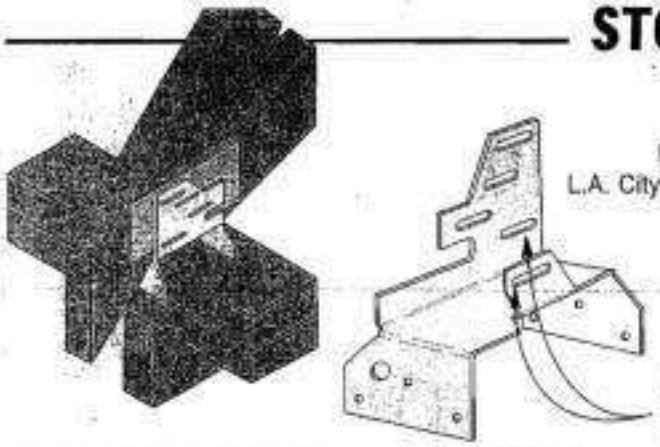

Typical **STC24** installation

STC24

Codes:
NER 564
ICBO 3613
L.A. City RR 25307

Wall Width	USP Stock No.	Ref. No.	Fastener Schedule[1]	
			Truss	Plate
2 x 4	STC24	TC24	(5) 10d	(6) 10d
2 x 6	STC26	TC26	(5) 10d	(6) 10d
2 x 8	STC28	TC28	(5) 10d	(6) 10d

1) 16d sinkers (9 gauge x 3-1/4" long) may be used where 10d commons are specified.

1½" slots allow for truss float. Do Not fully seat nails into truss when installing. Locate nails into the center of slots.

SBP series Supplementary Bearing Plates

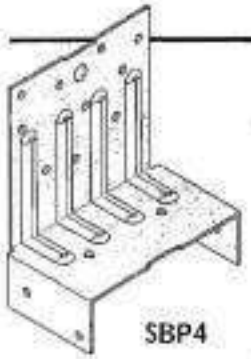

SBP4

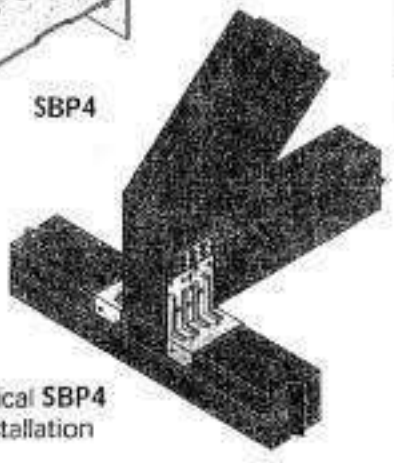

Typical **SBP4** installation

Codes:
NER 530
ICBO 5700
L.A. City RR 25337

Wall Width	USP Stock No.	Ref. No.	Joist Thickness[4]	Fastener Schedule[1,2,3]		
				Plate		Truss
				Top	Sides	
2 x 4	SBP4	TBE4	2-7/8" or less	(4) 10d	(8) 10d	(20) 10dx1-1/2
			3" or more	(4) 10d	(8) 10d	(20) 10d
2 x 6	SBP6	TBE6	2-7/8" or less	(4) 10d	(8) 10d	(28) 10dx1-1/2
			3" or more	(4) 10d	(8) 10d	(28) 10d

1) Fastener Schedule is for a pair of SBP devices.
2) 10d x 1-1/2 nails are 9 gauge (0.148" diameter) x 1-1/2" long.
3) 16d sinkers (9 gauge x 3-1/4" long) may be used where 10d commons are specified.
4) Multiple ply trusses shall be fastened together to act as a single unit.

©Copyright 2002 United Steel Products Company

USP Lumber Connectors™

Girder Truss Hangers

GT series Girder Truss Hangers

Codes:
NER 530
ICBO 5700
L.A. City RR 25337

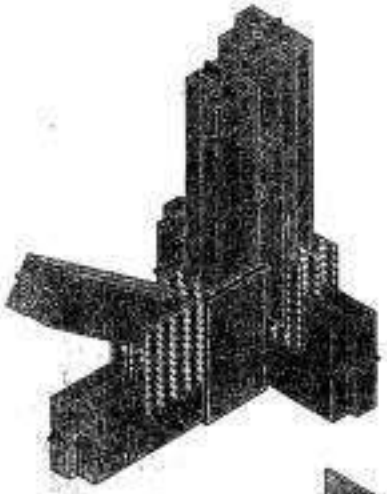

Typical **GT2T4B** installation



GT2T4B

Carried Member	USP Stock No.	Ref. No.	Fastener Schedule[1] Carrying Member Bolts	Fastener Schedule[1] Carried Member Nails	Minimum Vertical Member
2 Ply	GT2T2B	THG2A	(2) 3/4	(12) 16d	2 x 6
	GT2T2BH	--	(2) 1	(12) 16d	2 x 6
	GT2T3B	--	(3) 3/4	(12) 16d	2 x 6
	GT2T4B	THGB2	(4) 3/4	(12) 16d	2 x 8
	GT2T6B	--	(6) 3/4	(12) 16d	2 x 8
	GT2T8B	THGBH2	(8) 3/4	(12) 16d	2 x 8
3 Ply	GT3T3B	THG3A	(3) 3/4	(12) 16d	2 x 6
	GT3T3BH	--	(3) 1	(12) 16d	2 x 6
	GT3T4B	THGB3	(4) 3/4	(12) 16d	2 x 8
	GT3T4BH	--	(4) 1	(12) 16d	2 x 8
	GT3T6B	--	(6) 3/4	(12) 16d	2 x 8
	GT3T8B	THGBH3	(8) 3/4	(12) 16d	2 x 8
4 Ply	GT4T4B	THGB4	(4) 3/4	(12) 16d	2 x 8
	GT4T4BH	THG4A	(4) 1	(12) 16d	2 x 8
	GT4T6B	--	(6) 3/4	(12) 16d	2 x 8
	GT4T6BH	--	(6) 1	(12) 16d	2 x 8
	GT4T8B	THGBH4	(8) 3/4	(12) 16d	2 x 8
5 Ply	GT5T8BH	--	(8) 1	(12) 16d	2 x 8

1) Bolts shall conform to ASTM A 307 Grade A or better.

HSUS series High Uplift Girder Truss Hangers

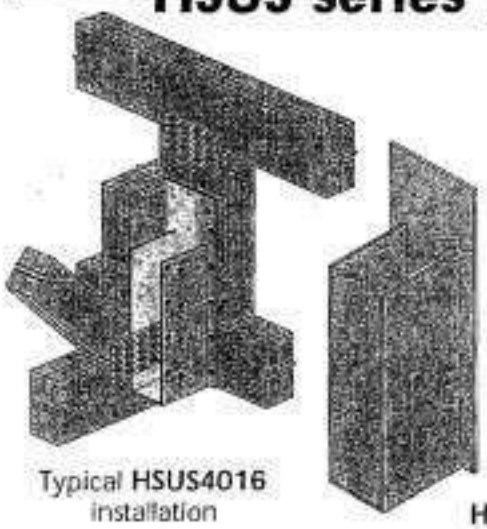

Typical **HSUS4016** installation

HSUS4016

Carried Member	USP Stock No.	Ref. No.	Fastener Schedule[1] Carrying Member Wood Screws	Fastener Schedule[1] Carried Member Wood Screws	Minimum Vertical Member
2 Ply	HSUS4016	--	(22) WS3	(16) WS3	2 x 6
3 Ply	HSUS8016	--	(28) WS3	(24) WS3	2 x 8
4 Ply	HSUS10016	--	(28) WS3	(24) WS3	2 x 10

1) WS3 Wood Screws are 1/4" dia. x 3" long and are included with the HSUS hangers.

©Copyright 2002 United Steel Products Company

High Uplift Girder Truss Hangers – GTU & GTWS series

The *GTU* and *GTWS* series girder-to-girder hangers feature high uplift capacities along with high gravity load ratings.

GTU – Utilizes bolting through the vertical member of the supported truss, which spreads the load more effectively throughout the multiple truss members.

GTWS – Low profile version, which utilizes USP's *WS3 Wood Screw*, shown on page 18.

Materials: See chart
Finish: GTU – USP primer; GTWS – G90 galvanizing
Codes: SBCCI, BOCA – NER 532, FL577, FL578, FL819, Dade County, FL 04-0427.04 — GTU40 & GTU80, Dade County, FL 01-0724.06 — GTU100

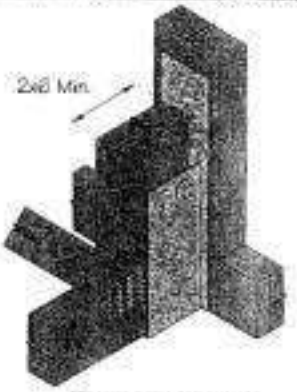

*Typical **GTU40** installation*



*Typical **GTWS** installation*

Installation

- Use all specified fasteners. See General Notes, page 14.
- WS Wood Screws are included with hangers where specified.
- GTU40 and GTU80 shall be installed to a minimum 2x6 vertical member of a girder truss having a maximum 2x8 bottom chord.
- GTU100 shall be installed to a minimum 2x10 vertical member of a girder truss having a maximum 2x8 bottom chord.
- GTWS2T shall be installed to a minimum 2x4 vertical member of a girder truss with no restriction on the size of the bottom chord.
- GTWS3T shall be installed to a minimum 2x6 vertical member of a girder truss with no restriction on the size of the bottom chord.
- GTWS4T shall be installed to a minimum 2x8 vertical member of a girder truss with no restriction on the size of the bottom chord.

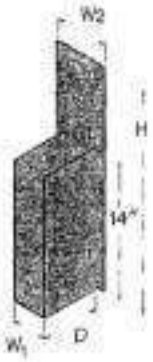

GTU40

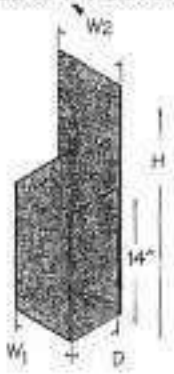

GTU100

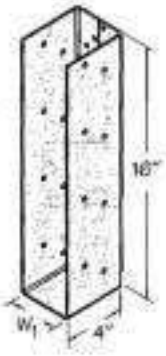

GTWS2T

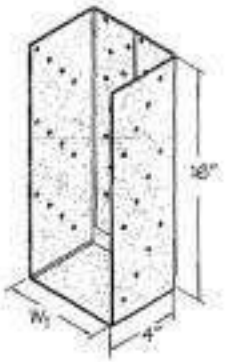

GTWS3T

USP Stock No.	Ref. No.	Steel Gauge	Dimensions W1	W2	H	D	Fastener Schedule[4] Supporting Truss Bolts[3,5]	Supporting Truss Wood Screws[5,7]	Supported Truss Bolts[3,5]	Supported Truss Nails	Supported Truss Wood Screws[5,7]	Allowable Loads (Lbs.)[1] 100%	115%	125%	Uplift[2] 133%	Uplift[2] 160%
GTU40	--	7	3-1/4	5-1/2	22-1/2	6	(5) 3/4	--	(2) 3/4	(6) 10d	--	7110	7110	7110	6250	6250
GTU80	--	7	4-7/8	5-1/2	25-1/2	6	(6) 3/4	--	(2) 3/4	(6) 10d	--	8560	9845	10685	8400	10000
GTU100	--	7	7	8	25-1/2	6	(6) 3/4	--	(2) 3/4	(6) 10d	--	8560	9845	10685	8400	10000
GTWS2T	--	10	3-1/4	--	16	4	--	(22) WS3	--	--	(16) WS3	6730	7740	8415	6535	7835
GTWS3T	--	10	4-7/8	--	16	4	--	(28) WS3	--	--	(24) WS3	8570	9855	10710	8790	11750
GTWS4T	--	10	6-1/2	--	16	4	--	(28) WS3	--	--	(24) WS3	8570	9855	10710	8790	11750

Bolts must be ordered separately. See page 22 for available sizes.

1) Allowable loads are based on 1997 NDS®.
2) Uplift loads have been increased 33-1/3% or 60% for wind or seismic loads; no further increase shall be permitted.
3) Bolts shall conform to ASTM A 307 or better.
4) GTU series 3/4" girder bolts and GTWS WS3 wood screws require a minimum 3" wood penetration.
5) WS3 wood screws are 1/4" x 3" long and are included with the GTWS hangers.
6) All bolts of the GTU hangers shall be installed in the vertical member satisfying all code spacing requirements.
7) The wood screws of the GTWS hangers may be installed in both vertical and horizontal members.

New products or updated product information are designated in red.

USP Lumber Connectors™

Truss to Truss Hangers

JUS, THD, & THDH Hangers

Carried Member	USP Stock No.	Ref. No.	Fastener Schedule[1,2] Carrying Member Header	Carried Member Truss
1 Ply	JUS24	LUS24	(4) 10d	(2) 10d
	JUS26	LUS26	(4) 10d	(4) 10d
	JUS28	LUS28	(6) 10d	(4) 10d
	JUS210	LUS210	(8) 10d	(4) 10d
	THD26	HUS26	(18) 16d	(12) 10d x 1-1/2
	THD28	HUS28	(28) 16d	(16) 10d x 1-1/2
	THD210	HUS210	(38) 16d	(20) 10d x 1-1/2
2 Ply	THD26-2	HHUS26-2	(18) 16d	(12) 10d
	THD28-2	HHUS28-2	(28) 16d	(16) 10d
	THD210-2	HHUS210-2	(36) 16d	(20) 10d
	THDH26-2	HGUS26-2	(20) 16d	(8) 16d
	THDH28-2	HGUS28-2	(36) 16d	(10) 16d
	THDH210-2	HGUS210-2	(46) 16d	(12) 16d
3 Ply	THDH26-3	HGUS26-3	(20) 16d	(8) 16d
	THDH28-3	HGUS28-3	(36) 16d	(10) 16d
	THDH210-3	HGUS210-3	(46) 16d	(12) 16d

1) 16d sinkers (9 gauge x 3-1/4" long) may be used where 10d commons are specified.
2) 10d x 1-1/2 nails are 9 gauge (0.148" diameter) by 1-1/2" long.

Codes:
NER 478
NER 608
ICBO 5356
ICBO 5441
ICBO 5684
L.A. City RR 25283
L.A. City RR 25327
L.A. City RR 25361
Dade County, FL 01-0327.04

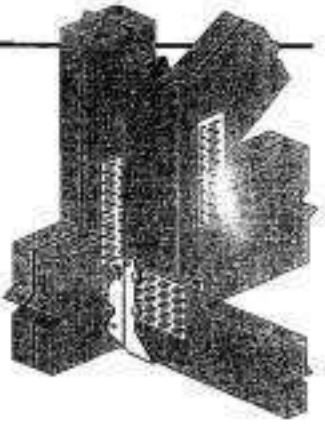

Typical **JUS26** installation

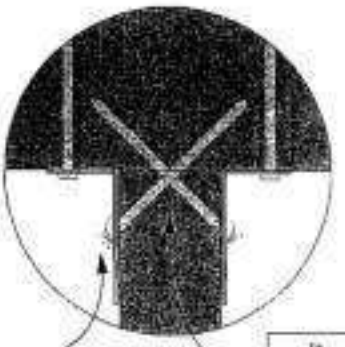

Bend Line Nailing

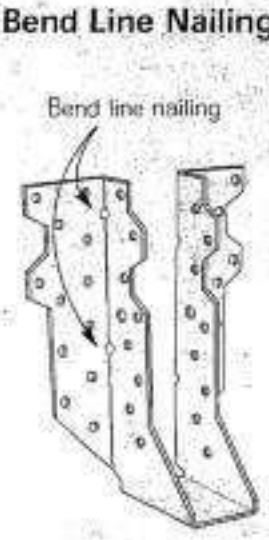

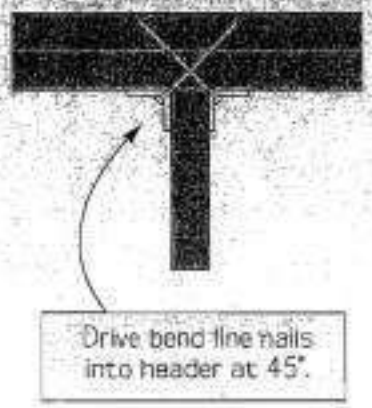

THD28

Some model designs may vary from illustration shown

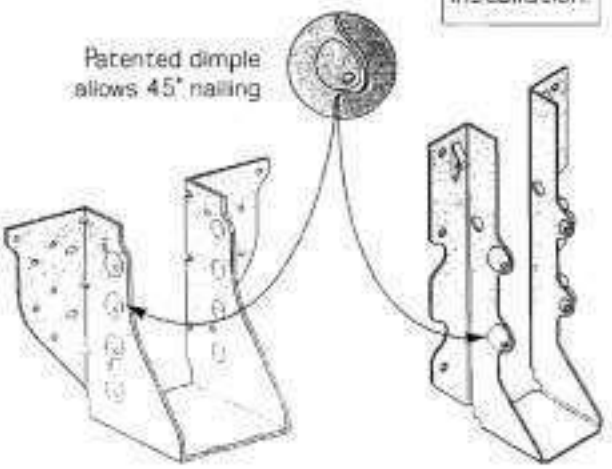

THDH26-2
Patents: #5,217,317

JUS28
Patents: #5,217,317

Some model designs may vary from illustration shown

©Copyright 2002 United Steel Products Company

USP Lumber Connectors

Truss to Truss Connectors

MSH29 Adjustable Strap Hanger

USP Stock No.	Ref. No.	Fastener Schedule[1,2]		
		Carrying Member Header		Carried Member
		Top	Face	Truss
MSH29	THA29	Maximum Nailing[3]		
		--	(18) 10d	(4) 10d
		Minimum Nailing[4]		
		(4) 10d	(2) 10d	(4) 10d x 1-1/2

Codes:
NER 530
ICBO 5700
L.A. City RR 25337
Patents: #5,217,317

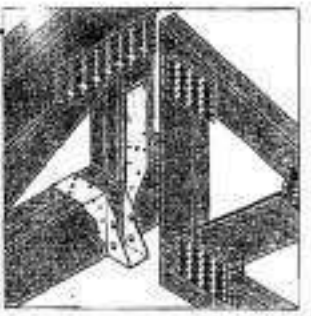

Typical combination **MSH29** installation

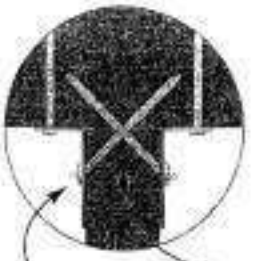

Drive joist nails into header at 45°.

Double shear nail design features fewer nails and faster installation.

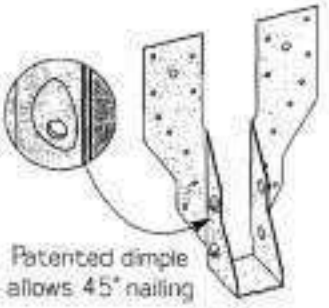

Patented dimple allows 45° nailing

MSH29

1) 10d x 1-1/2 nails are 9 gauge (0.148" diameter) by 1-1/2" long.
2) 16d sinkers (9 gauge x 3-1/4" long) may be used where 10d commons are specified.
3) **Maximum Nailing** - All face nails must be used. Double shear nailing required through the truss into header.
4) **Minimum Nailing** - The hanger is installed in a top mount condition with at least the top two header face nail holes filled, and four top flange nail holes filled. Drive double shear nails in straight.

SKH & SKHH series Skewed 45° Hangers

Carried Member	USP Stock No.	Ref. No.	Fastener Schedule[1,2]	
			Carrying Member	Carried Member
			Header	Truss
1 Ply	SKH24L/R	SUR/L24	(4) 16d	(4) 10d x 1-1/2
	SKH26L/R	SUR/L26	(6) 16d	(6) 10d x 1-1/2
	SKH28L/R	--	(10) 16d	(8) 10d x 1-1/2
	SKH210L/R	SUR/L210	(14) 16d	(10) 10d x 1-1/2
2 Ply	SKHH26L/R-2	HSUR/L26-2	(12) 16d	(4) 16d x 2-1/2
	SKHH210L/R-2	HSUR/L210-2	(20) 16d	(6) 16d x 2-1/2

Codes:
NER 478
ICBO 5684
L.A. City RR 25283
Dade County,
FL 01-0327.04



SKHH210R-2
SKH similar

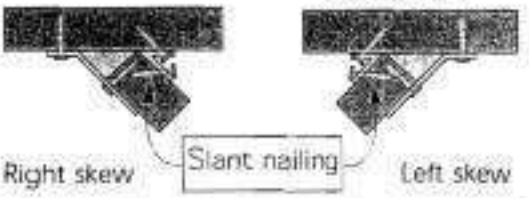

Right skew — Slant nailing — Left skew

1) 10d x 1-1/2 nails are 9 gauge (0.148" diameter) by 1-1/2" long.
2) 16d x 2-1/2 nails are 8 gauge (0.162" diameter) by 2-1/2" long.

SNP3 Skewed Nail Plate

USP Stock No.	Ref. No.	Fastener Schedule
		Each End
SNP3	--	(6) 8d

Codes:
ICBO 5764
SBCCI 2042
BOCA 99-62

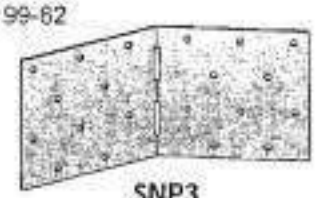

Bend angle only once

SNP3

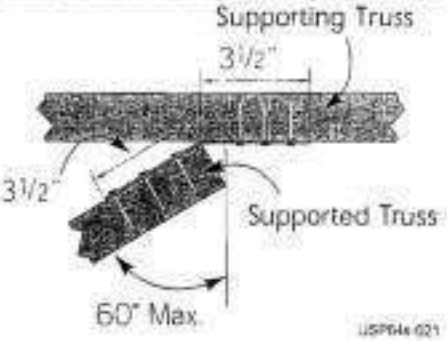

© Copyright 2002 United Steel Products Company

USP64x 021

USP Lumber Connectors

Hip/Jack Connectors

HHC, HJC, HJHC, & HTHJ series

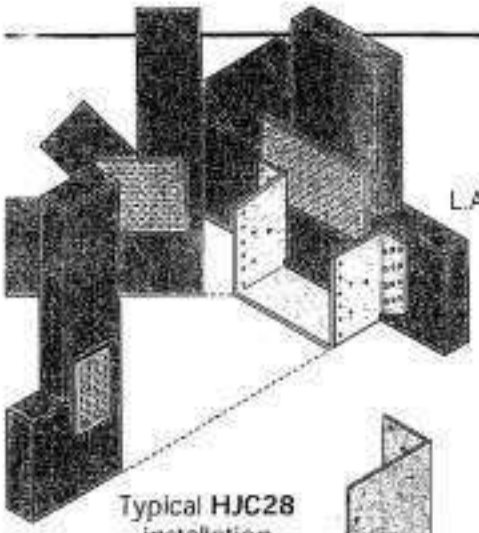

Typical **HJC28** installation

Codes:
NER 532
NER 564
ICBO 3613
L.A. City RR 25307
Dade County,
FL 01-0327.04

USP Stock No.	Ref. No.	Fastener Schedule[1]		
		Carrying Member	Carried Member per Hip	Carried Member per Jack
HJC26	--	(16) 16d	(5) 10d	(7) 10d
HJC28	--	(20) 16d	(6) 10d	(8) 10d
HTHJ24-18	--	(10) 10d	(5) 10d	(3) 10d
HTHJ26-18	LTHJR/L	(16) 16d	(7) 16d	(5) 16d
HHC26	--	(20) 16d	(5) 10d	--
HHC28	--	(24) 16d	(6) 10d	--
HJHC26	MTHM	(20) 16d	(5) 10d	(2) 10d
HJHC28	--	(24) 16d	(6) 10d	(2) 10d

1) 16d sinkers (9 gauge x 3-1/4" long) may be used where 10d commons are specified.

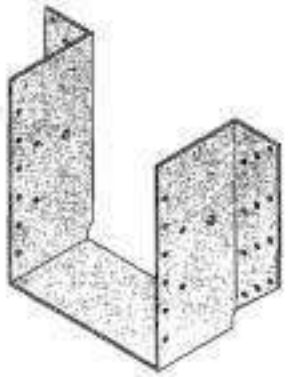

HJC28

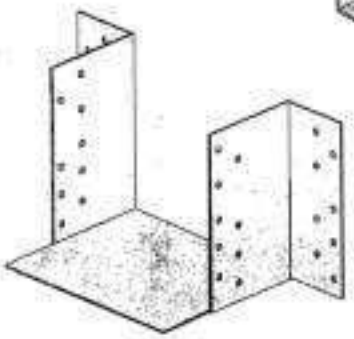

HTHJ26-18

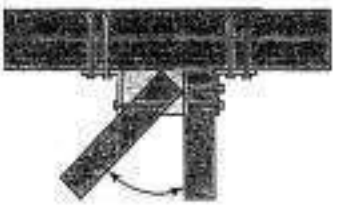

45°

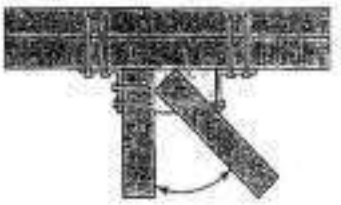

45°

Typical **HJC/HTHJ** installation top view

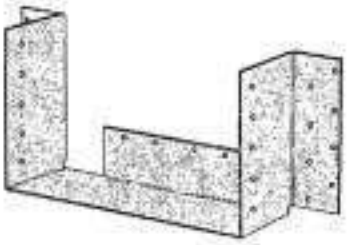

HHC26

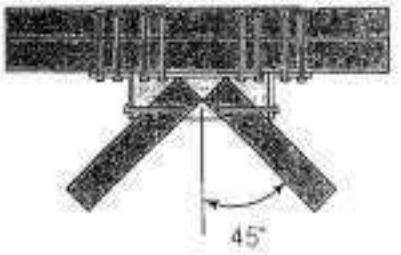

45°

Typical **HHC** installation top view

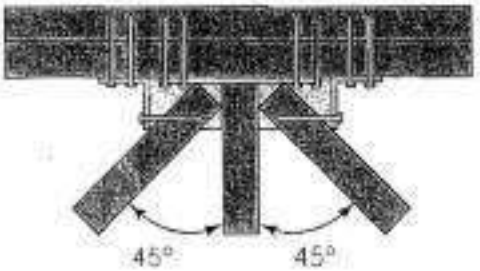

45° 45°

Typical **HJHC** installation top view

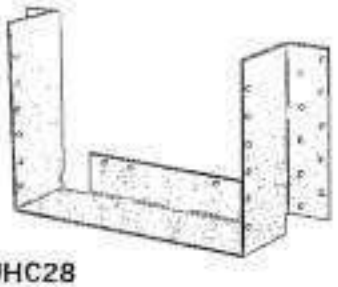

HJHC28

©Copyright 2002 United Steel Products Company

USP	Simpson Mod. No.	Fasteners		Uplift	Floor	Roof
		Face	Joist	160	100	133
THD26	HUS26	6-16d	14-16d	1550	2785	3335
THD28	HUS28	8-16d	22-16d	2000	3380	3655
THD26-2	HTU26-2 (Min)	14-10d	20-16d	1515	2880	3840
THD26-2	HTU26-2 (Max)	20-10d	20-16d	2175	3310	3840
THDH26-2	HGUS26-2	20-16d	8-16d	2325	3940	5240
THD28-2	HTU28-2 (Min)	26-16d	14-10d	1530	3745	4305
THD28-2	HTU28-2 (Min)	26-16d	16-10d	3485	3745	4990
THDH28-2	HGUS28-2	36-16d	12-16d	3220	6805	7925
THDH28-3	HGUS28-3	36-16d	12-16d	3220	6805	7925
THD46	HHUS46	20-16d	8-16d	2325	3940	4930
SKHH46L	HSUL46	12-16d	4-16d	815	1610	2000
SKHH46R	HSUR46	12-16d	4-16d	815	1610	2000
HTHJ2418	THJU26 3-1/2" Heel	16-10d	8-10d	745	1915	1915
HTHJ2418	THJU26 5-1/2" Heel	16-10d	14-10d	1310	2350	2350
HTHJ2618	MTHM 2 Member (2-2x4 BC)	22-16d	8-10dx1-1/2	1075	2915	2915
HTHJ2618	MTHM 2 Member (2-2x6 BC)	34-16d	8-10dx1-1/2	1075	3505	3505
HTHJ2618	MTHM 2 Member (2-2x8 BC)	42-16d	8-10dx1-1/2	1075	4335	4335
HTHJ2618	MTHM 3 Member (2-2x4 BC)	22-16d	16-10dx1-1/2	1790	3035	3800
HTHJ2618	MTHM 3 Member (2-2x6 BC)	34-16d	16-10dx1-1/2	1790	4650	4650
HTHJ2618	MTHM 3 Member (2-2x8 BC)	42-16d	16-10dx1-1/2	1790	5025	5025
SKHH26L	SUL26	6-16d	6-10x1-1/2	765	800	1000
SKHH26R	SUR26	6-16d	6-10x1-1/2	765	800	1000
SKHH26-2L	HSUL26-2	12-16d	4-16dx2-1/2	815	1610	2000
SKHH26-2R	HSUR26-2	12-16d	4-16dx2-1/2	815	1610	2000
GTWS2T	THGQ2-SDS3 (MIN) 2x6 BC	22-1/4x3 SDS	10-1/4x3 SDS	3600	7920	7920
GTWS2T	THGQ2-SDS3 (MIN) 2x8 BC	28-1/4x3 SDS	10-1/4x3 SDS	3600	10080	10080
GTWS2T	THGQ2-SDS3 (MAX) 2x6 BC	22-1/4x3 SDS	14-1/4x3 SDS	4535	9240	9770
GTWS2T	THGQ2-SDS3 (MAX) 2x8 BC	28-1/4x3 SDS	14-1/4x3 SDS	4535	11760	12435
GTWS3T	THGQ3-SDS4.5 (MIN) 2x6 BC	22-1/4x4-1/2 SDS	10-1/4x4-1/2 SDS	3600	7920	7920
GTWS3T	THGQ3-SDS4.5 (MIN) 2x8 BC	28-1/4x4-1/2 SDS	10-1/4x4-1/2 SDS	3600	10080	10080
GTWS3T	THGQ3-SDS4.5 (MAX) 2x6 BC	22-1/4x4-1/2 SDS	14-1/4x4-1/2 SDS	4535	9140	9140
GTWS3T	THGQ3-SDS4.5 (MAX) 2x8 BC	28-1/4x4-1/2 SDS	14-1/4x4-1/2 SDS	4535	11635	11635
GTWS4T	THGQH4-SDS6 (MIN) 2x8 BC	34-1/4x6 SDS	12-1/4x6 SDS	3875	13875	13875
GTWS4T	THGQH4-SDS6 (MIN) 2x10 BC	40-1/4x6 SDS	12-1/4x6 SDS	3875	16320	16320
GTWS4T	THGQH4-SDS6 (MAX) 2x8 BC	34-1/4x6 SDS	26-1/4x6 SDS	9900	14280	14335
GTWS4T	THGQH4-SDS6 (MAX) 2x10 BC	40-1/4x6 SDS	26-1/4x6 SDS	9900	16800	16865



USP Lumber Connectors™

Alternative Installations

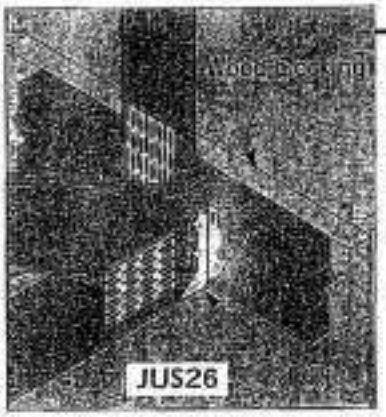

Backer block installation

Wood blocking used to achieve full design load value of a face mount hanger attached to a carrying member.

(Blocking to be designed by truss designer or engineer of record)

General Blocking Notes

- Wood blocking should be of similar size/grade as the truss member to which it is attached.
- The blocking should be designed to act as one unit with truss members.
- Truss designer shall approve blocking size/grade, fasteners required, and application.
- All fasteners used to attach wood blocking should be independent of the fasteners in the truss hanger.

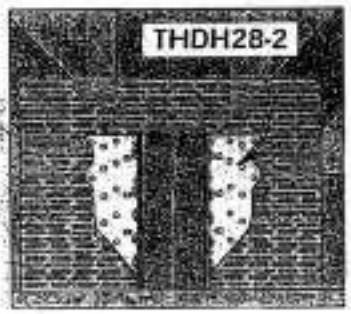

Panel point installation

Connection with face mount hanger attaching to a truss panel point.



Filler block installation

Wood filler blocking used for supported member width less than hanger width.

(Blocking to be designed by truss designer or engineer of record.)

Alternate Design for Sloped Bottom Chord Trusses

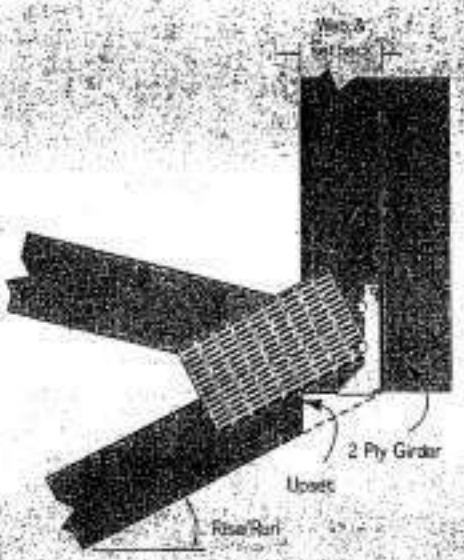

This alternate design for sloped bottom chord trusses demonstrates the use of end-vertical upset to allow for the use of non-sloped hangers.

Upset = Rise/Run x (Web + Setback)

This procedure will work with common standard hangers as well as terminal hangers such as USP's *HJC*, *HHC*, and *HJHC series*. Designer should review the D-dimension on the hanger to confirm the flat area on the vertical is sufficient for full bearing.

Truss designer shall be responsible for all truss design issues, including but not limited to plate shear and truss bearing.

Rise / Run (inches)	Vertical Web	Upset (inches)
1/12	2 x 4	5/16
	2 x 6	1/2
2/12	2 x 4	5/8
	2 x 6	15/16
3/12	2 x 4	7/8
	2 x 6	1-3/8
4/12	2 x 4	1-3/16
	2 x 6	1-7/8
5/12	2 x 4	1-1/2
	2 x 6	2-5/16
6/12	2 x 4	1-3/4
	2 x 6	2-3/4
7/12	2 x 4	2-1/16
	2 x 6	3-1/4
8/12	2 x 4	2-3/8
	2 x 6	3-11/16
9/12	2 x 4	2-5/8
	2 x 6	4-1/8
10/12	2 x 4	2-15/16
	2 x 6	4-5/8
11/12	2 x 4	3-1/4
	2 x 6	5-1/16
12/12	2 x 4	3-1/2
	2 x 6	5-1/2

©Copyright 2002 United Steel Products Company

Custom Truss

2501 South Andrews Avenue
Fort Lauderdale, FL. 33316
954-786-8800
954-786-8804 (fax)

CUSTOMER: _____

MODEL/TYPE: _____

LOCATION: _____

JOB #: _____

HANDLING AND INSTALLATION NOTES

1. Please read copy of "BRACING WOOD TRUSSES" attached
2. These trusses must be lifted with care useing a stongback or spreader bar to avoid damage to trusses and/or personnel. Custom Designed Truss Co. is not reponsible for incorrectly handled and/or installed trusses. Extra care must be taken with spans over 40'-0" and with scissor/vaulted trusses. We highly recommend that a crane and experienced personnel be used during installation.
3. Please review layout carefully to assure that components are installed as plan shows, are in their proper location, are positioned right side up, are turned in the right direction to preform as engineered. Should you have difficulties, please call us, and we will answer your questions and, if necessary, send a person to check the problem. We will not permit backcharges if this procedure is not followed.
4. Unless otherwise noted on this, DO NOT CUT ANY CHORDS OR WEBS IN ANY TRUSSES!!! It is the responsibility of the General Contractor or Owner to advise all trades. We are not responsible for field modifications unless athorized by signed agreement by our agent.
5. These trusses are to be spaced 24 inches on center unless noted otherwise.
6. When installing Scissor Trussea, Vaulted Trusses, or Cathedral Trusses, allowance must be made for horizontal displacement at one support.
7. If floor trusses must support concrete sub-floor, the plywood must be shored during the pouring operation and throughout the drying period consult Architect or Engineer of record for shoring instructions.

TEMPORARY BRACING NOTES

1. Please read copy of "BRACING WOOD TRUSSES" attached
2. These trusses must be substantially braced during installation and before any load (plywood, roofing, etc.) is applied. Under no circumstances place entire bundle of plywood, roofing, or other building materials on roof or floor system. This can severly overload the trusses beyond their structural limits and cause failure resulting in serious injury or death.
3. Temporary bracing specified on truss drawings is required to prevent buckling of the member shown . The bracing used may be a 2x4 No. 3 SPKD or equal lumber, connected w/ (2) 16d nails minimum. This continuous bracing should be connected to a solid point at both ends. If it is possible to provide a continuous brace, this can be accomplished by "T" bracing the member by applying the same size and grade of lumber as the member on a 90 degree angle w/ 8d nails @ 12 inch centers. Custom Designed Truss co. will not be responsible in any way for an improperly braced roof/floor truss system.
4. Permanent bracing is always required. Specia' desighn requirements, such as wind bracing, porta' bracing, seismic bracing, shear walls, diaphragms, and other load transfer elements and their connections to these trusses must be designed by the project Architect or Engineer.
5. It is the responsibility of the General Contractor or Owner to advise all trades. If any questions arise please call this office for instructions at (954)-786-8800

(1)

Morris A. Shashoua, P.E.
MAURICE A. SHASHOUA, P.E.,INC.
1908 NW 112 Avenue
Coral Springs, FL 33071
(954)-753-1988
License Nos EB5251 & 19554

STANDARD ROOF VALLEY DETAIL

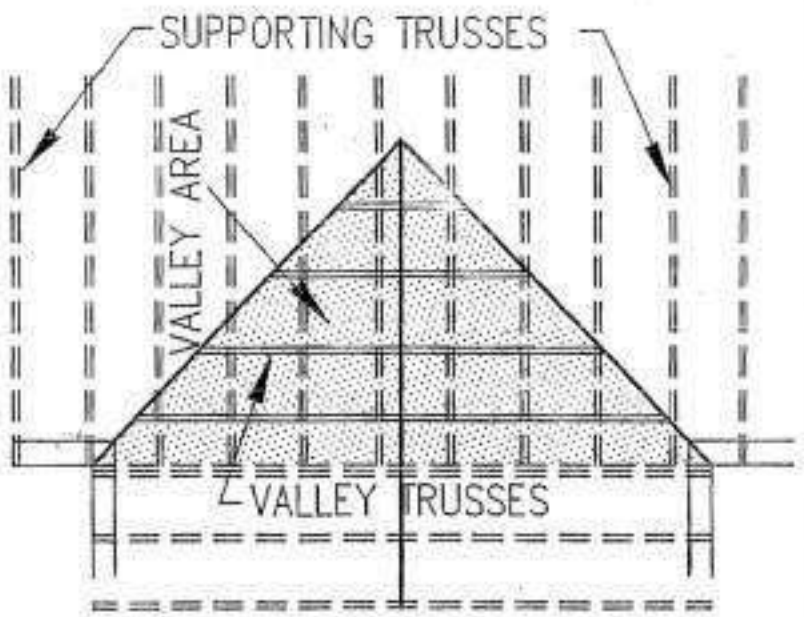

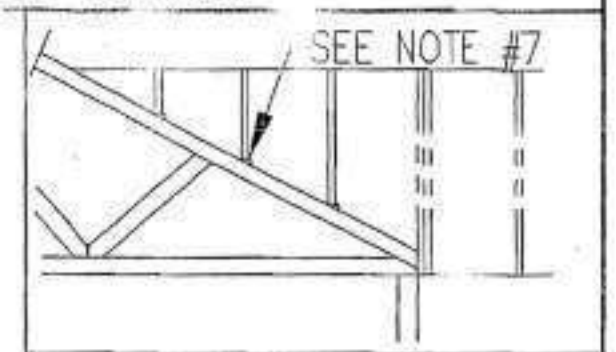

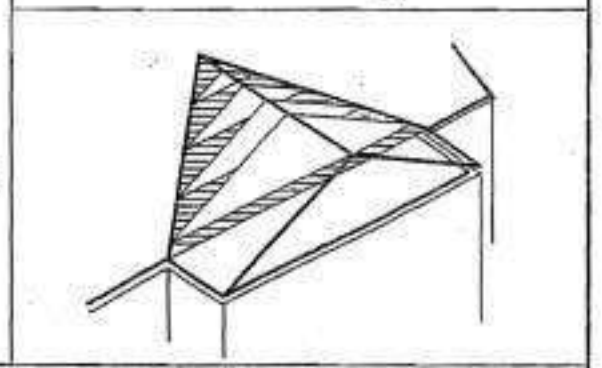

1. TRUSS INSTALLER IS RESPONSIBLE FOR FURNISHING AND INSTALLING BRACE MATERIAL
2. FOR VALLEY VERTICALS OVER 7'-6" IN LENGTH, BUILDER TO ADD 2x4 "T" BRACE TO SIDE OF VERTICAL FOR INTIRE LENGTH. FASTEN W/ 16d NAILS 6" O.C.
3. THIS DESIGN IS VALID FOR WIND SPEEDS UP TO 146 MPH, A SHAPE FACTOR UP TO 1.1, AND A MEAN HEIGHT UP TO 30'-0"
4. THIS DETAIL IS FOR BRACING INFORMATION ONLY. SEE ENGINEERING DRAWINGS FOR ACTUAL SHAPE, PITCHES, OVERHANGS, HEEL CONDITIONS, AND PLATE INFORMATION.
5. TOP CHORDS OF SUPPORTING TRUSSES MEST BE SHEATHED WITH 1/2" MINIMUM PLY-WOOD, FASTEND AS REQUIRED BY GOVERNING CODES, OR SCABBED TO 1 FACE WITH 2x4 THROUGHOUT VALLEY AREA, FASTENED WITH 10d NAILS AT 6" O.C. OR LATERALLY BRACED WITH 1x4 ATTACHED WITH (2) 8d NAILS AT EACH INTERSECTION IF TOP CHORD OF SUPPORTING TRUSSES ARE 2x6 OR LARGER.
6. THIS DESIGN SHOWS ONLY REQUIRED BRACING FOR INDIVIDUAL VALLEY SET. FOR PERMANENT AND TEMPORARY BRACING, WHICH IS ALWAYS REQUIRED, CONSULT THE BUILDING ENGINEER OR ARCHITECT. REFER TRUSS PLATE INSTITUTE PUBLICATION "HIB-91 SUMMARY SHEET" FOR OTHER IMPORTANT INSTALLATION AND BRACING NOTES.
7. BUILDER TO BEVEL BOTTOM CHORD OF VALLEY MEMBER OR ATTACH 6" WEDGE TO TOP CHORD OF SUPPORTING TRUSSES TO PROVIDE SOLID BEARING.
8. * STRAP OR CLIP EACH VALLEY MEMBER TO TOP CHORD OF EACH SUPPORTING TRUSS.

Custom Truss

2501 South Andrews Avenue
Fort Lauderdale, FL. 33316
954-786-8800
954-786-8804 (fax)

DESIGN CRITERIA

TOP CHORD:	2x4 No. 2D 19SP
BOT CHORD:	2x4 No. 2D 19SP
VERTICALS :	2x4 No. 3 19SP
ALLOWED STRESS INCREASE :	1.33
TOP CHORD LIVE LOAD	30 PSF
TOP CHORD DEAD LOAD	15 PSF
BOTTOM CHORD DEAD LOAD	10 PSF
TOTAL LOAD	55 PSF

[illegible] P.E.
MAURICIO A. SHASHOUA, P.E., INC.
[illegible] NW 112 Avenue
Coral Springs, FL 33071
(954)-753-1966
License Nos. [illegible]

STANDARD GABLE END DETAIL

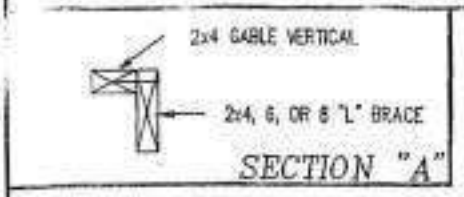

SECTION "A"

BRACING

SPACING OF VERTICALS	MAX LENGTH W/O BRACE	MAX LENGTH WITH BRACE	MAX LENGTH 1x4 L-BRACE	MAX LENGTH 2x4 L-BRACE	MAX LENGTH 2x6 L-BRACE	MAX LENGTH 2x8 L-BRACE
12"	5'-2"	10'-4"	8'-0"	9'-8"	12'-9"	15'-10"
16"	4'-9"	9'-6"	7'-3"	8'-9"	11'-10"	14'-11"
24"	4'-1"	8'-2"	6'-4"	7'-8"	10'-9"	13'-10"

DIAGONALLY BRACE VERTICALS LONGER THAN SHOWN IN CHART

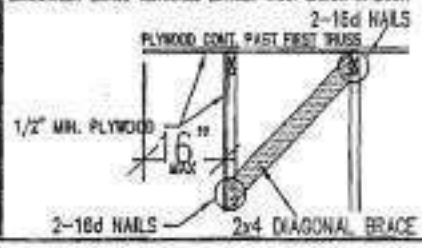

1. TRUSS ERECTOR IS RESPONSIBLE FOR FURNISHING AND INSTALLING BRACE MATERIAL.
2. BUILDER TO ADD A CONTINUOUS P.T. 2x4 LEDGER FLATWISE ON TOP OF BEARING SUPPORT, UP AGAINST GABLE BOTTOM CHORD. PROVIDE CONNECTION TO WALL TO RESIST 100 PLF UPLIFT AND 265 PLF HORIZONTAL LOAD INWARD OR OUTWARD.
3. THIS DESIGN IS VALID FOR WIND SPEEDS UP TO 146 MPH, A SHAPE FACTOR UP TO 1.1, AND A MEAN HEIGHT UP TO 30'-0"
4. THIS DETAIL IS FOR BRACING INFORMATION ONLY. SEE ENGINEERING DRAWING FOR ACTUAL SHAPES, PITCHES, OVERHANGS, HEEL CONDITIONS, AND PLATING INFORMATION.
5. WHEN ADJACENT TRUSS HAS A VAULTED BOTTOM CHORD, STABILITY OF WALL SUPPORTING GABLE MUST BE CHECKED BY BUILDING DESIGNER. ADDITIONALLY, A 2x4 LEDGER MUST BE ATTACHED TO THE INSIDE FACE OF GABLE, FOLLOWING PROFILE OF ADJACENT TRUSS BOTTOM CHORD. FASTEN LEDGER TO EACH VERTICAL WITH 3-10d NAILS.
6. THIS DESIGN SHOWS ONLY REQUIRED BRACING FOR INDIVIDUAL GABLE TRUSS. FOR PERMANENT AND TEMPORARY BRACING, WHICH IS ALWAYS REQUIRED, CONSULT THE BUILDING ENGINEER OR ARCHITECT. REFER TO TRUSS PLATE INSTITUTE PUBLICATION "HIB-91 SUMMARY SHEET" FOR OTHER IMPORTANT INSTALLATION AND BRACING NOTES.
7. BOTTOM CHORD OF GABLE MUST BE PROTECTED FROM CONCRETE AND MOISTURE.
8. TEMPORARY GROUND BRACING IS REQUIRED FOR ALL GABLE END INSTALLATIONS.
9. THIS TRUSS MAY HAVE A MAXIMUM 7'-0" CANTILEVER WITH NO ADDITIONAL WEBBING.

Custom Truss
2501 South Andrews Avenue
Fort Lauderdale, FL. 33316
954-786-8800
954-786-8804 (fax)

DESIGN CRITERIA

TOP CHORD:	2x4 No. 2D 195P
BOT CHORD:	2x4 No. 2D 195P
VERTICALS :	2x4 No. 3 195P
ALLOWED STRESS INCREASE. :	1.33
TOP CHORD LIVE LOAD	30 PSF
TOP CHORD DEAD LOAD	15 PSF
BOTTOM CHORD DEAD LOAD	10 PSF
TOTAL LOAD	55 PSF

Morris A. Shaikhouni, P.E.
MAURICE A. SHAIKHOUNI, P.E., INC.
1800 NW 112 Avenue
Coral Springs, FL 33071
(954) 753-1988
License Nos. 55251 & 10504

STANDARD DROP GABLE END DETAIL

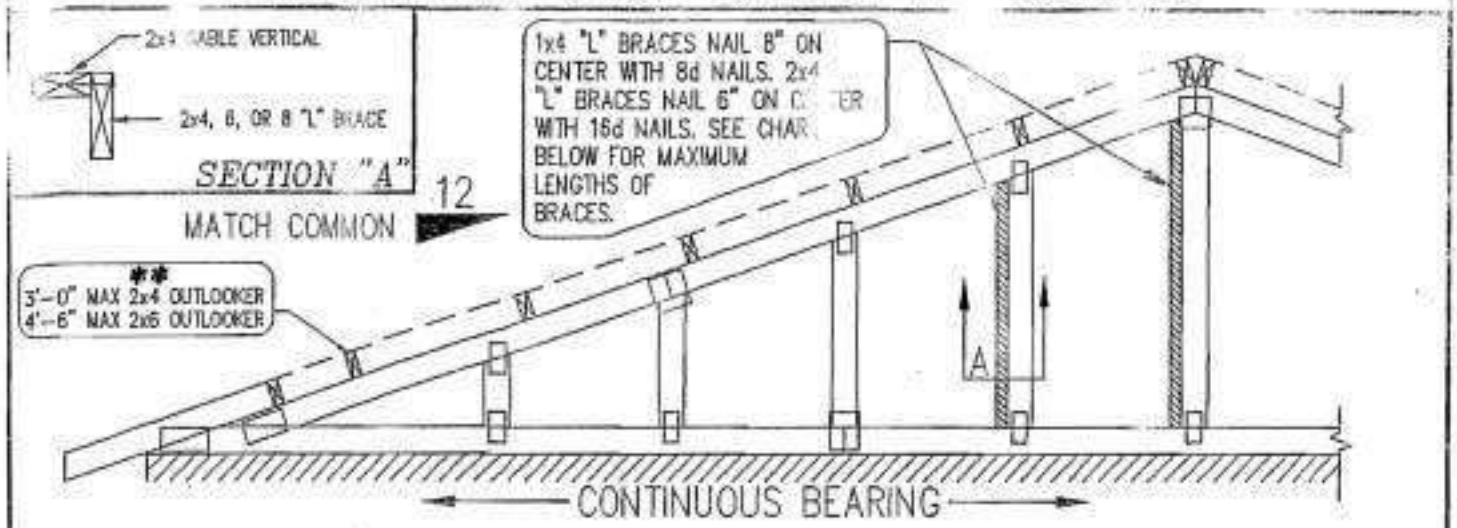

BRACING

SPACING OF VERTICALS	MAX LENGTH W/O BRACE	MAX LENGTH WITH BRACE	MAX LENGTH 1x4 L-BRACE	MAX LENGTH 2x4 L-BRACE	MAX LENGTH 2x6 L-BRACE	MAX LENGTH 2x8 L-BRACE
12"	5'-2"	10'-4"	8'-0"	9'-8"	12'-9"	15'-10"
16"	4'-9"	9'-6"	7'-3"	8'-9"	11'-10"	14'-11"
24"	4'-1"	8'-2"	6'-4"	7'-8"	10'-9"	13'-10"

DIAGONALLY BRACE VERTICALS LONGER THAN SHOWN IN CHART

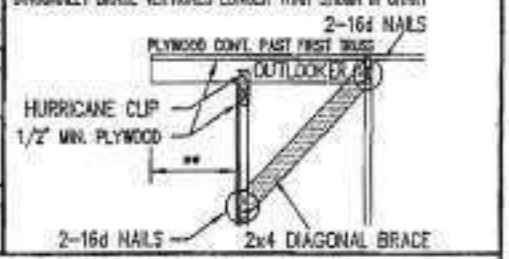

1. TRUSS ERECTOR IS RESPONSIBLE FOR FURNISHING AND INSTALLING BRACE MATERIAL.
2. BUILDER TO ADD A CONTINUOUS P.T. 2x4 LEDGER FLATWISE ON TOP OF BEARING SUPPORT, UP AGAINST GABLE BOTTOM CHORD. PROVIDE CONNECTION TO WALL TO RESIST 100 PLF UPLIFT AND 265 PLF HORIZONTAL LOAD INWARD OR OUTWARD.
3. THIS DESIGN IS VALID FOR WIND SPEEDS UP TO 146 MPH, A SHAPE FACTOR UP TO 1.1, AND A MEAN HEIGHT UP TO 30'-0"
4. THIS DETAIL IS FOR BRACING INFORMATION ONLY. SEE ENGINEERING DRAWING FOR ACTUAL SHAPES, PITCHES, OVERHANGS, HEEL CONDITIONS, AND PLATING INFORMATION.
5. WHEN ADJACENT TRUSS HAS A VAULTED BOTTOM CHORD, STABILITY OF WALL SUPPORTING GABLE MUST BE CHECKED BY BUILDING DESIGNER. ADDITIONALLY, A 2x4 LEDGER MUST BE ATTACHED TO THE INSIDE FACE OF GABLE, FOLLOWING PROFILE OF ADJACENT TRUSS BOTTOM CHORD. FASTEN LEDGER TO EACH VERTICAL WITH 3-10d NAILS.
6. THIS DESIGN SHOWS ONLY REQUIRED BRACING FOR INDIVIDUAL GABLE TRUSS. FOR PERMANENT AND TEMPORARY BRACING, WHICH IS ALWAYS REQUIRED, CONSULT THE BUILDING ENGINEER OR ARCHITECT. REFER TO TRUSS PLATE INSTITUTE PUBLICATION "HIB-91 SUMMARY SHEET" FOR OTHER IMPORTANT INSTALLATION AND BRACING NOTES.
7. BOTTOM CHORD OF GABLE MUST BE PROTECTED FROM CONCRETE AND MOISTURE.
8. TEMPORARY GROUND BRACING IS REQUIRED FOR ALL GABLE END INSTALLATIONS.
9. THIS TRUSS MAY HAVE A MAXIMUM 7'-0" CANTILEVER WITH NO ADDITIONAL WEBBING.

Custom Truss

2501 South Andrews Avenue
Fort Lauderdale, FL. 33316
954-786-8800
954-786-8804 (fax)

DESIGN CRITERIA

TOP CHORD:	2x4 No. 2D 19SP
BOT CHORD:	2x4 No. 2D 19SP
VERTICALS :	2x4 No. 3 19SP
ALLOWED STRESS INCREASE. :	1.33
TOP CHORD LIVE LOAD	30 PSF
TOP CHORD DEAD LOAD	15 PSF
BOTTOM CHORD DEAD LOAD	10 PSF
TOTAL LOAD	55 PSF

Morris A. Shashoua, P.E.
MAURICE A. SHASHOUA, P.E., INC.
1968 NW 112 Avenue
Coral Springs, FL 33071
(954)-753-1088
License Nos. E86251 & 10554

STANDARD FALSE BOTTOM DETAIL

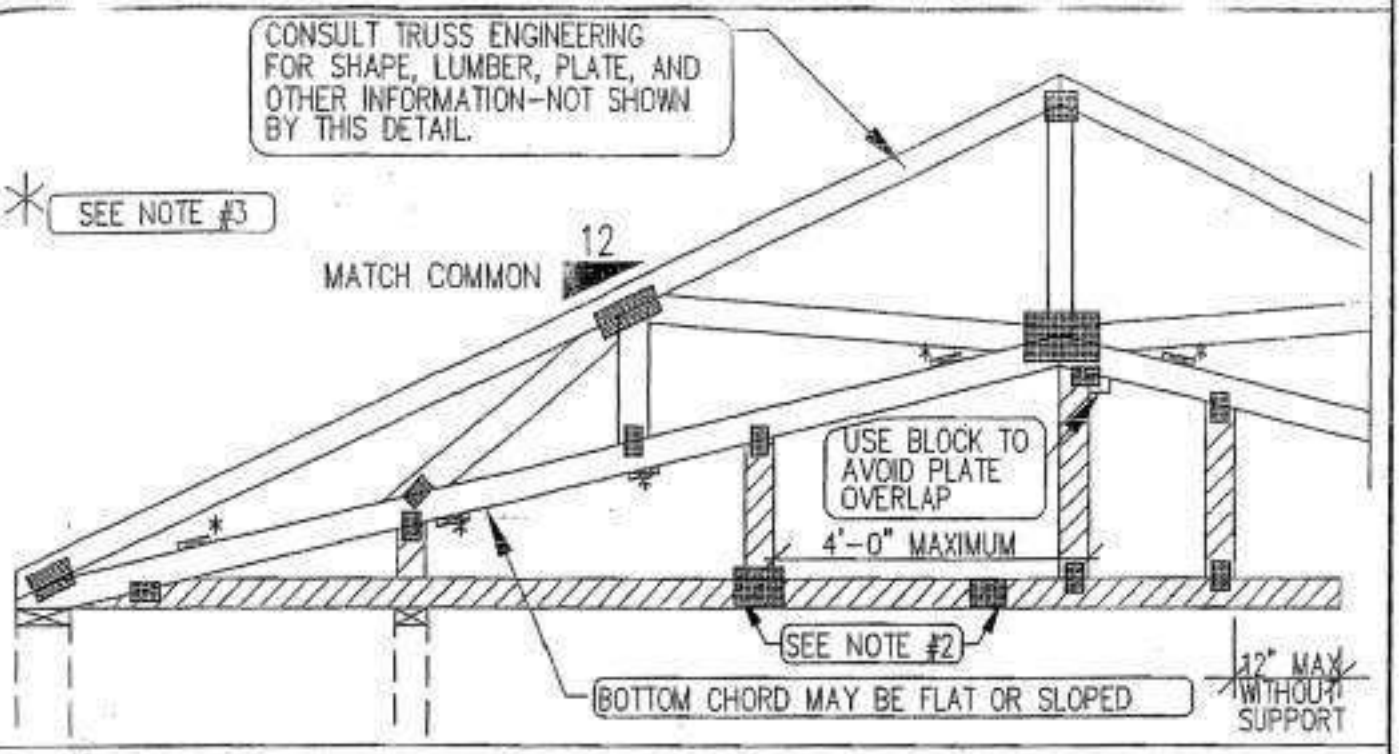

1. TRUSS INSTALLER IS REPONSIBLE FOR FURNISHING AND INSTALLING BRACE MATERIAL.
2. SPLICE PLATE TO BE 5x6 AT VERTICALS; 3x6 PLATE BETWEEN VERTICALS.
3. 1x4 CONTINUOUS LATERAL BRACING AT 6'–0" ON CENTER AND AT JOINTS. FASTEN TO EITHER EDGE OF TRUSS BOTTOM CHORD WITH (2) 8d COMMON NAILS.
4. THIS DETAIL IS FOR BRACING INFORMATION ONLY. SEE ENGINEERING DRAWINGS FOR ACTUAL SHAPE, PITCHES, OVERHANGS, HEEL CONDITIONS, AND PLATING INFORMATION.
5. DIAGONAL BRACING IS REQUIRED AT EACH END OF LATERAL BRACING AND 20'–0" INTERVALS IN FALSE BOTTOM CHORD AREA. DIAGONAL BRACING MAY BE ELIMINATED AT ENDS IF LATERAL BRACING IS ATTACHED TO THE STRUCTURAL BOTTOM CHORD OF AN ADJACENT TRUSS THAT HAS A PROPERLY ATTACHED RIGID CEILING.
6. THIS DESIGN SHOWS ONLY REQUIRED BRACING FOR INDIVIDUAL FILLER. FOR OTHER PERMANENT AND TEMPORARY BRACING, WHICH IS ALWAYS REQUIRED, CONSULT THE BUILDING ENGINEER OR ARCHITECT. REFER TRUSS PLATE INSTITUTE PUBLICATION "HIB–91 SUMMARY SHEET" FOR OTHER IMPORTANT INSTALLATION AND BRACING NOTES.
7. ADD STUD AT CANTILEVER CONDITIONS AND ATTACH WITH 3x4 MINIMUM PLATES.
8. FALSE BOTTOMS MAY BE SHIPPED LOOSE AND ATTACHED IN FEILD BY TRUSS INSTALLER. ATTACH FILLLER WITH 3x6 "NAIL PLATES" ON BOTH FACES OF FILLER AT EACH OCCURANCE OF A VERTICAL, FASTEN 4 "TRUSS NAILS" (.131 DIA. x 1–3/8") IN STRUCTURAL BOTTOM CHORD AND 4 "TRUSS NAILS" IN FILLER.

Custom Truss
2501 South Andrews Avenue
Fort Lauderdale, FL. 33316
954-786-8800
954-786-8804 (fax)

DESIGN CRITERIA

TOP CHORD:	2x4 No. 2D 19SP
BOT CHORD:	2x4 No. 2D 19SP
VERTICALS :	2x4 No. 3 19SP
ALLOWED STRESS INCREASE :	1.33
TOP CHORD LIVE LOAD	30 PSF
TOP CHORD DEAD LOAD	15 PSF
BOTTOM CHORD DEAD LOAD	10 PSF
TOTAL LOAD	55 PSF

Morris A. Shashoua, P.E.
MAURICE A. SHASHOUA, P.E., INC.
1908 NW 112 Avenue
Coral Springs, FL 33071
(954)-753-1886
License Nos. E00251 & 16554

7'-0" CORNER SET

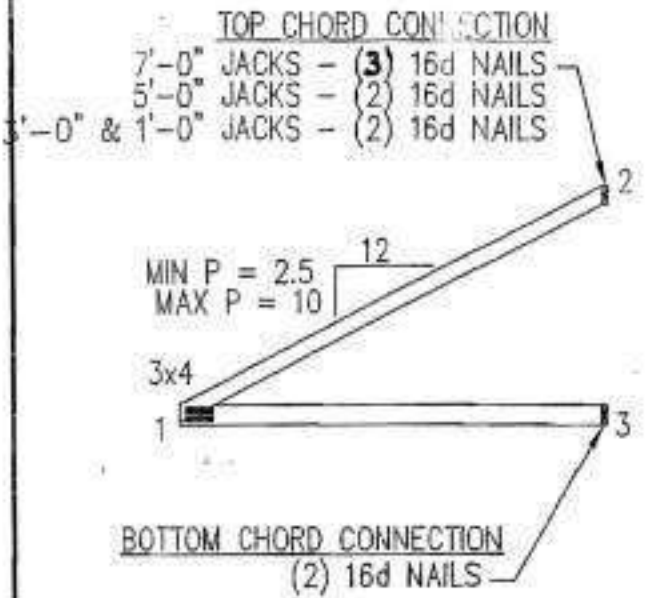

COMMON JACKS

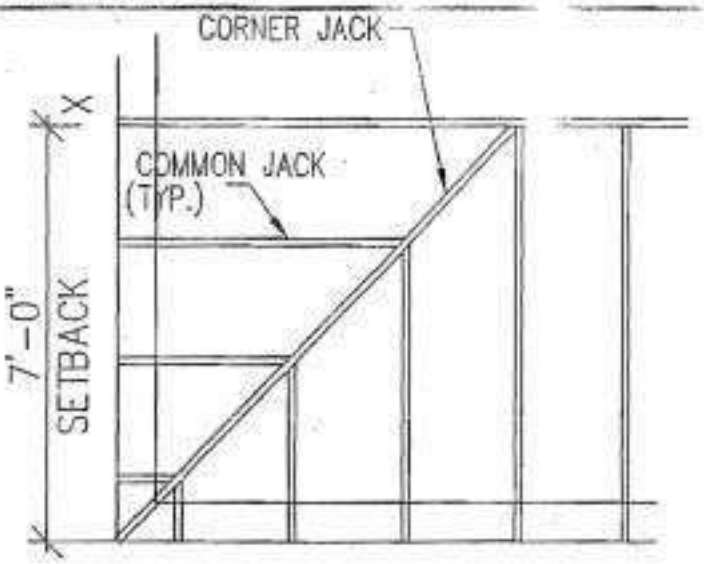

PARTIAL ROOF LAYOUT

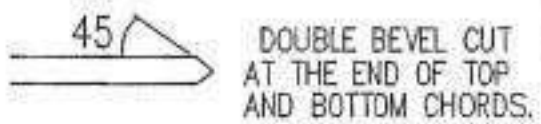

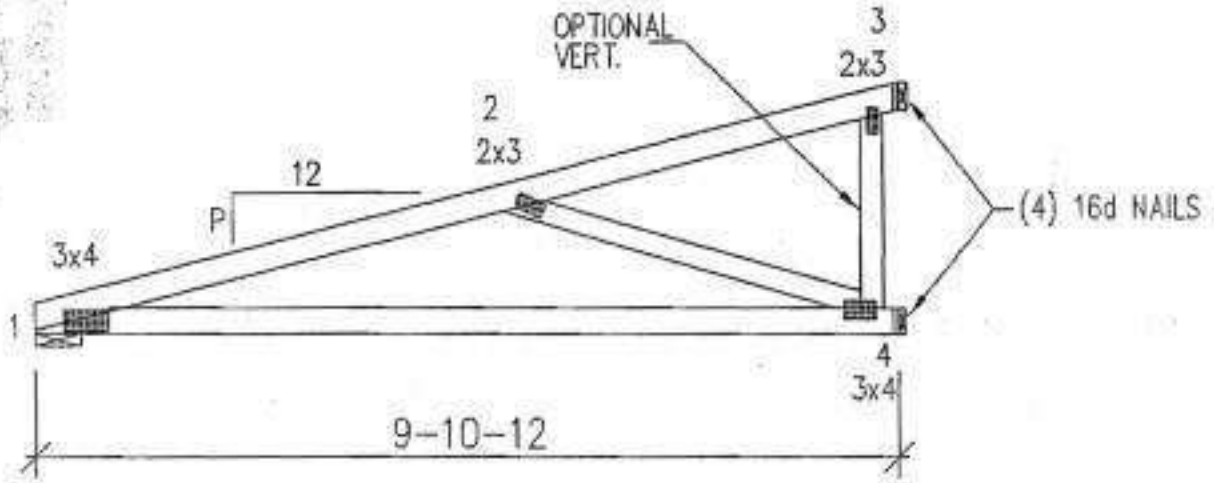

CORNER JACK

NOTE: THIS DESIGN HAS BEEN CHECKED WITH 146 MPH WIND LOAD. WALL HIEGHT 18 FT MAX.
PROVIDE FOR UPLIFT AT BEARING WALL CONNECTIONS, 158 LBS AT COMMON JACKS & 258 LBS AT CORNER JACKS.

Custom Truss

2601 South Andrews Avenue
Fort Lauderdale, FL. 33316
954-786-8800
954-786-8804 (fax)

DESIGN CRITERIA

TOP CHORD:	2x4 No. 2D 19SP
BOT CHORD:	2x4 No. 2D 19SP
VERTICALS :	2x4 No. 3 19SP
ALLOWED STRESS INCREASE. :	1.33
TOP CHORD LIVE LOAD	30 PSF
TOP CHORD DEAD LOAD	15 PSF
BOTTOM CHORD DEAD LOAD	10 PSF
TOTAL LOAD	55 PSF

Morris A. Shashoua, P.E.
MAURICE A. SHASHOUA, P.E. INC.
1008 NW 112 Avenue
Coral Springs, FL 33071
(954)-753-1888
License Nos.EB0251 & 10884

FIELD APPLIED OVERHANG DETAIL

THIS OVERHANG DETAIL IS TO BE USED IN CONJUNCTION WITH MITEK DESIGNS WITH 2x4

SCAB(TWICE THE OVERHANG LENGTH) TO ONE FACE WITH 16d NAILS AT 8" O.C. CLUSTER OF NAILS AND GRADE OF LUMBER AS PER TABLE BELOW

SCAB LUMBER SO. PINE	L MAXIMUM OVERHANG	16d NAILS *	**
#2 N	2-05-06	5	3
#2	2-08-06	5	3
#2 DENSE	2-11-12	5	3
#1 N	2-11-12	5	3
#1	3-02-10	5	3
#1 DENSE	3-05-01	5	3

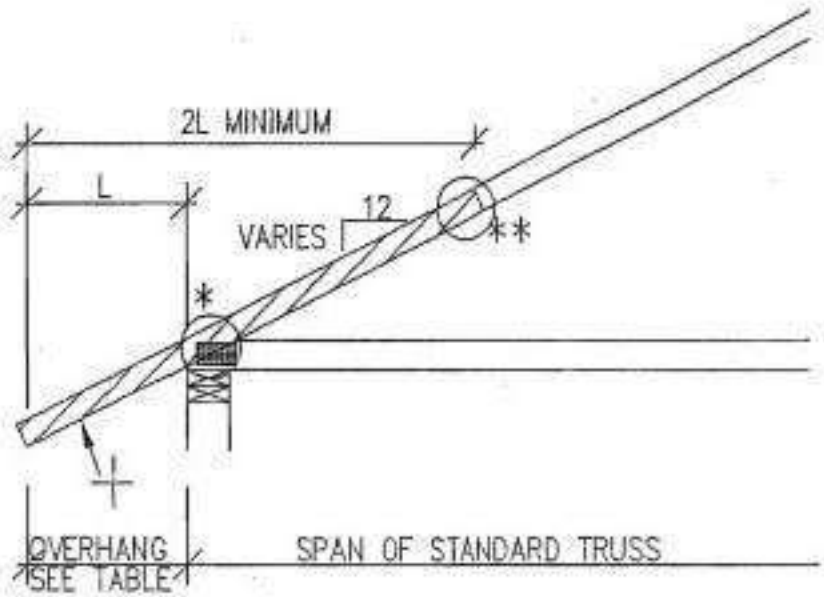

Custom Truss

2501 South Andrews Avenue
Fort Lauderdale, FL. 33316
954-786-8800
954-786-8804 (fax)

DESIGN CRITERIA

TOP CHORD:	2x4 No. 2D 19SP
BOT CHORD:	2x4 No. 2D 19SP
VERTICALS :	2x4 No. 3 19SP
ALLOWED STRESS INCREASE. :	1.33
TOP CHORD LIVE LOAD	30 PSF
TOP CHORD DEAD LOAD	15 PSF
BOTTOM CHORD DEAD LOAD	10 PSF
TOTAL LOAD	55 PSF

Morris A. Shashoua, P.E.
MAURICE A. SHASHOUA, P.E.,INC.
1908 NW 112 Avenue
Coral Springs, FL 33071
(954)-753-1880
License Nos.E85251 & 10354

15%	STANDARD REPAIR DETAIL FOR BROKEN CHORDS, WEBS AND DAMAGED OR MISSING CHORD SPLICES	ST-REP01A1

TOTAL NUMBER OF NAILS EACH SIDE OF BREAK*		X INCHES	MAXIMUM FORCE (lbs) 15% LOAD DURATION							
			SYP		DF		SPF		HF	
2x4	2x6		2x4	2x6	2x4	2x6	2x4	2x6	2x4	2x6
14	21	24"	1626	2439	1497	2246	1272	1908	1268	1932
18	27	30"	2091	3136	1925	2888	1635	2453	1656	2484
22	[illegible]	36"	2555	3832	2353	3529	1999	2998	2024	3036
26	[illegible]	42"	3020	4530	2781	4171	2352	3543	2382	3588
30	45	48"	3485	5227	3209	4812	2726	4088	2750	4140

* DIVIDE EQUALLY FRONT AND BACK

ATTACH 2x_ SCAB OF THE SAME SIZE AND GRADE AS THE BROKEN MEMBER TO EACH FACE OF THE TRUSS (CENTER ON BREAK OR SPLICE) W/CONSTRUCTION QUALITY ADHESIVE AND 10d NAILS (TWO ROWS FOR 2x4, THREE ROWS FOR 2x6) SPACED 3"oc STAGGERED AS SHOWN.(.131"dia. x 3")

THE LENGTH OF THE BREAK (C) SHALL NOT EXCEED 12". (C=PLATE LENGTH FOR SPLICE REPAIRS)
THE MINIMUM OVERALL SCAB LENGTH REQUIRED (L) IS CALCULATED AS FOLLOWS:
L = (2) X + C

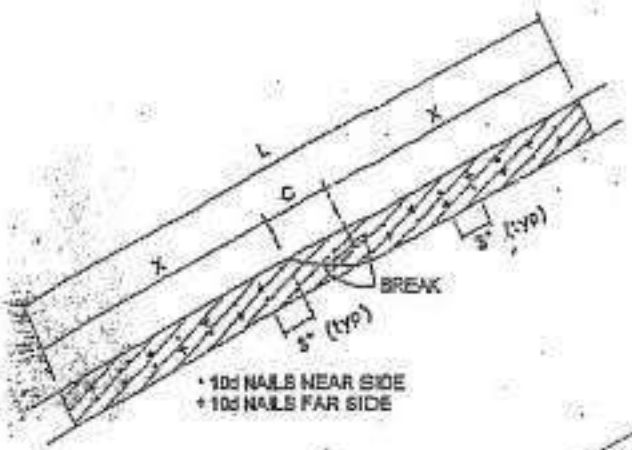

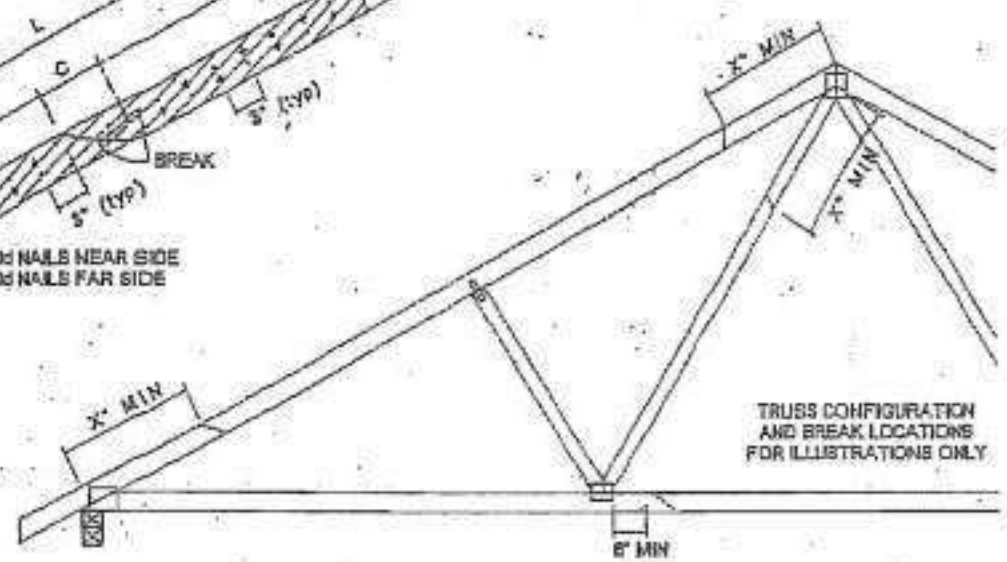

THE LOCATION OF THE BREAK MUST BE GREATER THAN OR EQUAL TO THE REQUIRED X DIMENSION FROM ANY PERIMETER BREAK OR HEEL JOINT AND A MINIMUM OF 6" FROM ANY INTERIOR JOINT (SEE SKETCH ABOVE)

DO NOT USE REPAIR FOR JOINT SPLICES

NOTES:
1. THIS REPAIR DETAIL IS TO BE USED ONLY FOR THE APPLICATION SHOWN. THIS REPAIR DOES NOT IMPLY THAT THE REMAINING PORTION OF THE TRUSS IS UNDAMAGED. THE ENTIRE TRUSS SHALL BE INSPECTED TO VERIFY THAT NO FURTHER REPAIRS ARE REQUIRED. WHEN THE REQUIRED REPAIRS ARE PROPERLY APPLIED, THE TRUSS WILL BE CAPABLE OF SUPPORTING THE LOADS INDICATED.
2. ALL MEMBERS MUST BE RETURNED TO THEIR ORIGINAL POSITIONS BEFORE APPLING REPAIR AND HELD IN PLACE DURING APPLICATION OF REPAIR.
3. THE END DISTANCE, EDGE DISTANCE AND SPACING OF NAILS SHALL BE SUCH AS TO AVOID UNUSUAL SPLITTING OF THE WOOD.
4. WHEN NAILING THE SCABS, THE USE OF A BACKUP WEIGHT IS RECOMMENDED TO AVOID LOOSENING OF THE CONNECTOR PLATES AT THE JOINTS OR SPLICES.
5. THIS REPAIR IS TO BE USED FOR SINGLE PLY TRUSSES IN THE 2x_ ORIENTATION ONLY.
6. THIS REPAIR IS LIMITED TO TRUSSES WITH NO MORE THAN THREE BROKEN MEMBERS.

Custom Truss
2501 South Andrews Avenue
Fort Lauderdale, FL. 33316
954-786-8800
954-786-8804 (fax)

Maurice A. Shashoua, P.E.
MAURICE A. SHASHOUA, P.E.,INC.
1800 NW 112 Avenue
Coral Springs, FL 33071
(954)-753-1988
License Nos. E85251 & 18684

STANDARD WEB BRACING

TRUSSES @ 2 O.C. TYP.

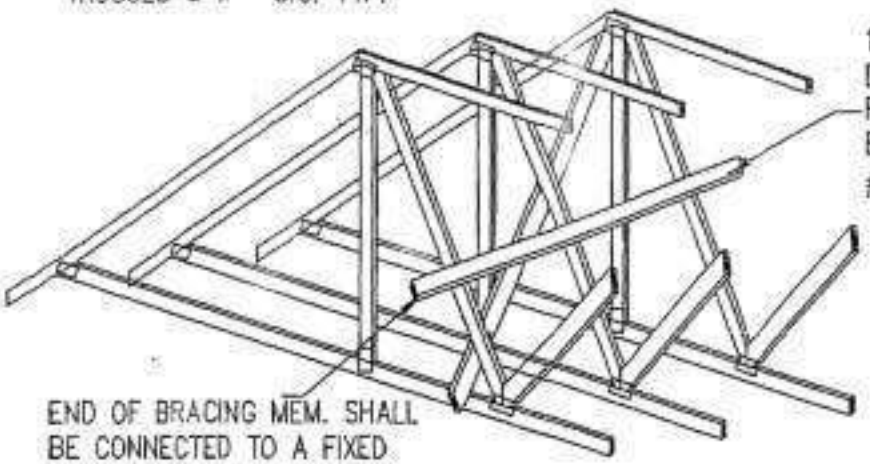

1x4 OR 2x3 LATERAL BRACE PER TRUSS DESIGN W/ 2-10d NAILS PER WEB FOR FORCES UP TP 4600 lbs. FORCES IN EXCESS OF 4600 lbs. REQUIRE 2x6 #3 OR BETTER

END OF BRACING MEM. SHALL BE CONNECTED TO A FIXED RIGID POINT OR X-BRACING AS NOTED ON THIS DETAIL

NOTE:
PROVIDE X-BRACING @ 20'-0" INTERVALS FOR WEB FORCES UP TO 2509 lbs. AND @ 10'-0" FOR FORCES GREATER THAN 2509 lbs

LATERAL BRACING DETAIL

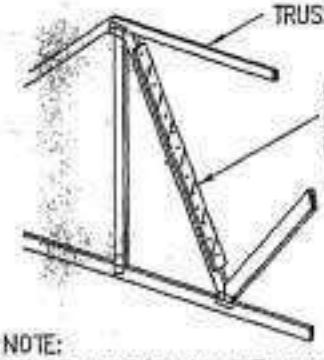

TRUSSES @ 24" O.C. TYP.

END OF BRACING MEM. SHALL BE CONNECTED TO A FIXED RIGID POINT OR X-BRACING AS NOTED ON THIS DETAIL



NOTE:
BRACE MUST BE 90% THE LENGTH OF THE WEB
THIS DETAIL IS TO BE USED AS AN ALTERNATE FOR CONT. LATERAL BRACING

NAILING PATTERN		
T-BRACE SIZE	NAIL SIZE	NAIL SPACING
1x4	10d	8" O.C.
2x4	16d	8" O.C.
NOTE: NAIL ALONG ENTIRE LENGTH OF T-BRACE (EACH PLY)		

T-BRACE SIZE				
	# OF TRUSS PLYS			
	2		1	
	ROWS OF BRACING			
WEB SIZE	1	2	1	2
2x4	1x4	2x4	2x4	2x4
2x6	1x6	2x6	2x6	2x6
2x8	2x8	2x8	2x8	2x8

OPTIONAL T-BRACE IN CASE THAT CONTINUOUS LATERAL BRACING CANNOT BE ACHIEVED

T-BRACE DETAIL

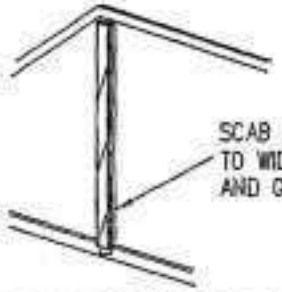

SCAB BRACING ATTACHED TO WIDE FACE SAME LENGTH AND GRADE W/16d NAILS @ 4" O.C.

SCAB BRACING

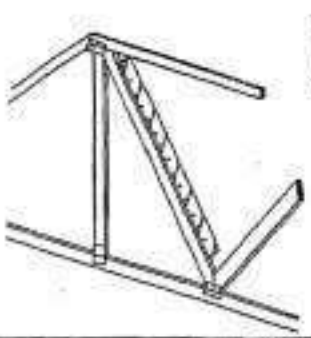



L-BRACE SIZE				
	# OF TRUSS PLYS			
	2		1	
	ROWS OF BRACING			
WEB SIZE	1	2	1	2
2x4	1x4	2x4	2x4	2x4
2x6	1x6	2x6	2x6	2x6
2x8	2x8	2x8	2x8	2x8

NAILING PATTERN		
L-BRACE SIZE	NAIL SIZE	NAIL SPACING
1x4	10d	8" O.C.
2x4	16d	8" O.C.
NOTE: NAIL ALONG ENTIRE LENGTH OF L-BRACE (EACH PLY)		

L-BRACING

Custom Truss

2501 South Andrews Avenue
Fort Lauderdale, FL. 33316
954-786-8800
954-786-8804 (fax)

DESIGN CRITERIA

TOP CHORD:	2x4 No. 20 19SP
BOT CHORD:	2x4 No. 20 19SP
VERTICALS :	2x4 No. 3 19SP
ALLOWED STRESS INCREASE. :	1.33
TOP CHORD LIVE LOAD	30 PSF
TOP CHORD DEAD LOAD	15 PSF
BOTTOM CHORD DEAD LOAD	10 PSF
TOTAL LOAD	55 PSF

Morris A. Shashoua, P.E.
MAURICE A. SHASHOUA, P.E.,INC.
1200 NW 112 Avenue
Coral Springs, FL 33071
(954) 753-1989
License Nos.E88281 & 14504

OFFSET BEARING JOINT

(B 10)

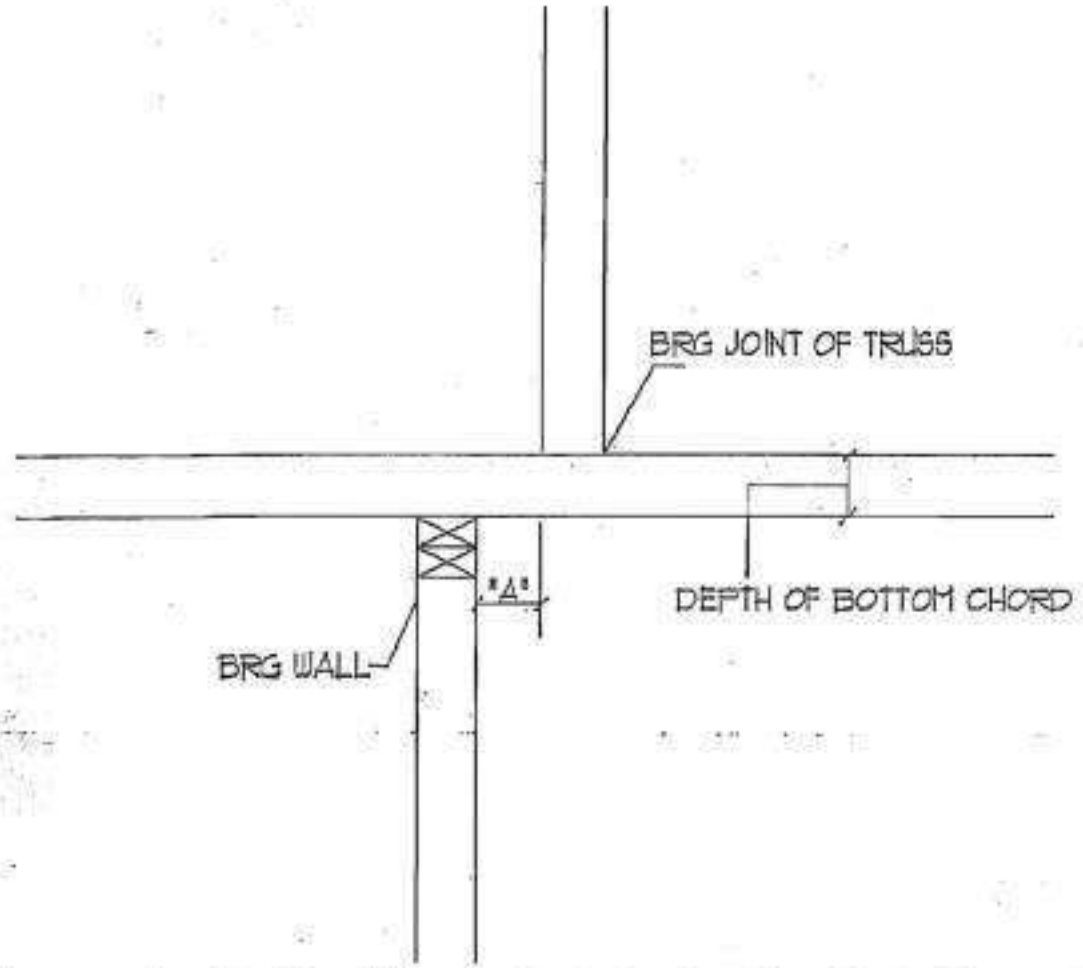

THIS BRG CONDITION IS STRUCTURALLY SOUND WHEN DIMENSION "A" DOES NOT EXCEED THE DEPTH OF THE BOTTOM CHORD

Custom Truss

2501 South Andrews Avenue
Fort Lauderdale, FL. 33316
954-786-8800
954-786-8804 (fax)

DESIGN CRITERIA

TOP CHORD:	2x4 No. 2D ISSP
BOT CHORD:	2x4 No. 2D ISSP
VERTICALS :	2x4 No. 3 ISSP
ALLOWED STRESS INCREASE :	1.33
TOP CHORD LIVE LOAD	30 PSF
TOP CHORD DEAD LOAD	15 PSF
BOTTOM CHORD DEAD LOAD	10 PSF
TOTAL LOAD	55 PSF

Morris A. Shashoua, P.E.
MAURICE A. SHASHOUA, P.E.,INC.
1008 NW 112 Avenue
Coral Springs, FL 33071
(954)-753-1088
License Nos.EB6251 & 10554

(10)

PIGGYBACK CONNECTION DETAIL

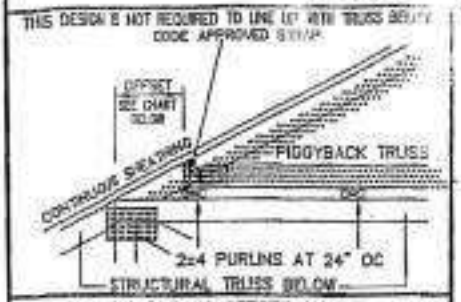

1st PURLIN OFFSET CHART

PITCH	3	4	5	6	7	8
OFFSET	1-8-7	1-4-5	1-1-5	11-5	9-15	8-15
PITCH	3.5	4.5	5.5	6.5	7.5	8.5
OFFSET	1-6-8	1-2-10	1-0-3	10-10	9-7	8-9

ELEVATED DESIGN

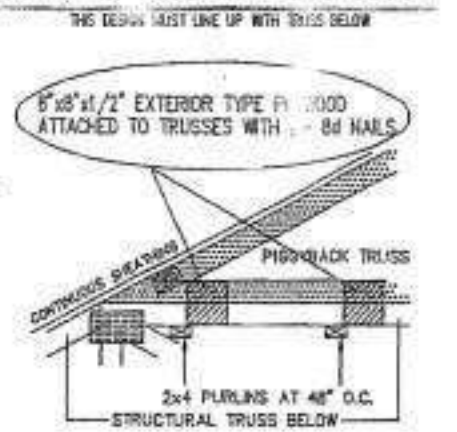

FLUSH DESIGN

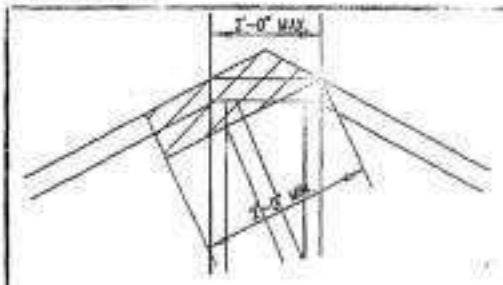

2x4,2x6,2x8,2x10,2x12– AS NEEDED, #2 SPRUCE–PINE–FUR,#2 HEM–FUR,#2 S.Y.P., OR #2 PT. S.Y.P. OR BETTER. ATTACH TO ONE FACE W/ 16d (0.128"x3.0") GUN NAILS @ 4" O.C. THROUGHOUT WEBS AND CHORDS

PEAK SCAB DETAIL

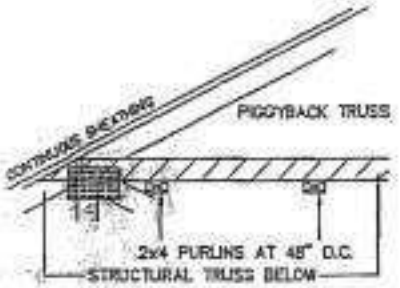

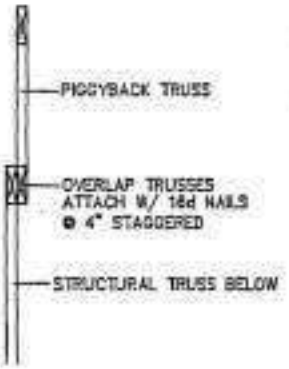

OVERLAPING DESIGN

1. TRUSS ERECTOR IS RESPONSIBLE FOR FURNISHING AND INSTALLING BRACE MATERIAL.
2. BUILDER MUST PROVIDE TOP CHORD PURLINS AT 24" ON CENTER TO REPLACE PLYWOOD SHEATHING DIAPHRAM MISSING BETWEEN PIGGYBACK AND SUPPORTING TRUSS.
3. THIS DESIGN IS VALID FOR WIND SPEEDS UP TO 146 MPH, A SHAPE FACTOR UP TO 1.1, AND A MEAN HEIGHT UP TO 30'–0"
4. THIS DETAIL IS FOR BRACING INFORMATION ONLY. SEE ENGINEERING DRAWING FOR ACTUAL SHAPES, PITCHES, OVERHANGS, HEEL CONDITIONS, AND PLATING INFORMATION.
5. ATTACH PURLINS TO STRUCTURAL TRUSS WITH 2 16d NAILS AT EACH INTERSECTION. BRACE VERTICALS LONGER THAN 48" WITH 1x4's AT HALF POINTS CONNECTED WITH 2 10d NAILS AT EACH INTERSECTION. LATERAL BRACING MUST BE ANCHORED AT ENDS.
6. THIS DESIGN SHOWS ONLY REQUIRED BRACING FOR INDIVIDUAL PIGGYBACK. FOR PERMANENT AND TEMPORARY BRACING, WHICH IS ALWAYS REQUIRED, CONSULT THE BUILDING ENGINEER OR ARCHITECT. REFER TO TRUSS PLATE INSTITUTE PUBLICATION "HIB–91 SUMMARY SHEET" FOR OTHER IMPORTANT INSTALLATION AND BRACING NOTES.

Custom Truss

2501 South Andrews Avenue
Fort Lauderdale, FL. 33316
954-786-8800
954-786-8804 (fax)

DESIGN CRITERIA

TOP CHORD:	2x4 No. 2D 19SP
BOT CHORD:	2x4 No. 2D 19SP
VERTICALS :	2x4 No. 3 19SP
ALLOWED STRESS INCREASE :	1.33
TOP CHORD LIVE LOAD	30 PSF
TOP CHORD DEAD LOAD	15 PSF
BOTTOM CHORD DEAD LOAD	10 PSF
TOTAL LOAD	55 PSF

Morris A. Shashoua, P.E.
MAURICE A. SHASHOUA, P.E., INC.
1908 NW 112 Avenue
Coral Springs, FL 33071
(954)-753-1988
License Nos.EB0291 & 10584

WEB BRACING RECOMMENDATIONS

X-BRACE BY SIZE	MAXIMUM WEB FORCE (lbs)									
	24" O.C.				48" O.C.				72" O.C.	
	BRACING MATERIAL TYPE				BRACING MATERIAL TYPE					
	A	B	C	D	A	B	C	D	C	D
10'-0"	4600*	4600*	4600*	6900*	1344	4600*	4600*	6900*	4034	6382
12'-0"	3942*	3942*	3942*	5914*	1344	3942*	3942*	5914*	3942*	5914*
14'-0"	3450*	3450*	3450*	5175*	1344	3450*	3450*	5175*	3450*	5175*
16'-0"	3066*	3066*	3066*	4600*	1344	3066*	3066*	4600*	3066*	4600*
18'-0"	2760*	2760*	2760*	4140*	1344	2760*	2760*	4140*	2760*	4140*
20'-0"	2509*	2509*	2509*	3763*	1344	2509*	2509*	3763*	2509*	3763*

*= CONTROLLED BY CONNECTION

TYPE	BRACING MATERIALS
A	1 x4 1ND. 45 SYP -OR- 1x4 #2 STD. (DF, HF, SPF)
B	2x3 #3 STD. CONST. (SPF, DF, HF, OR SYP)
C	2x4 #3 STD. CONST. (SPF, DF, HF, OR SYP)
D	2x6 #3 OR BETTER (SPF, DF, HF, OR SYP)

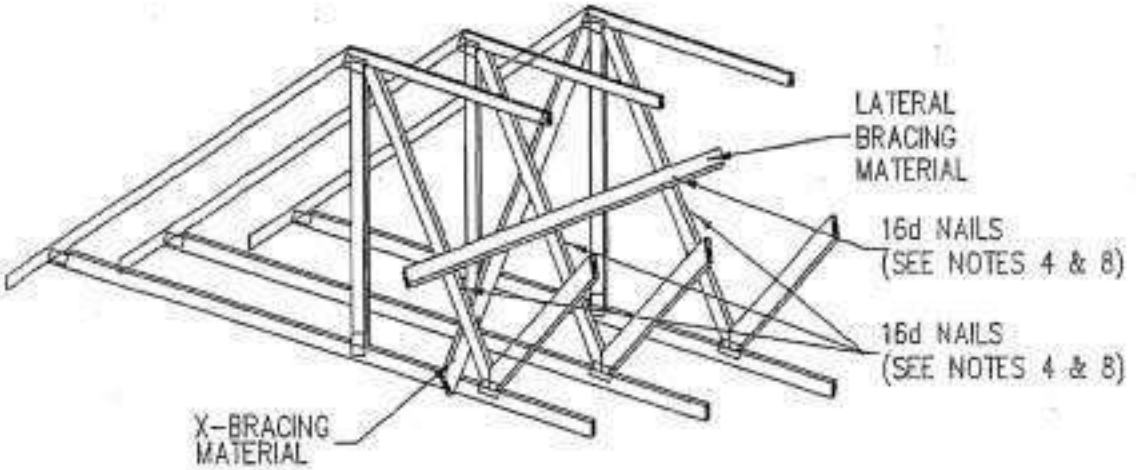

Custom Truss

2501 South Andrews Avenue
Fort Lauderdale, FL. 33316
954-786-8800
954-786-8804 (fax)

DESIGN CRITERIA

TOP CHORD:	2x4 No. 2D 19SP
BOT CHORD:	2x4 No. 2D 19SP
VERTICALS :	2x4 No. 3 19SP
ALLOWED STRESS INCREASE :	1.33
TOP CHORD LIVE LOAD	30 PSF
TOP CHORD DEAD LOAD	15 PSF
BOTTOM CHORD DEAD LOAD	10 PSF
TOTAL LOAD	55 PSF

Morris A. Shashoua, P.E.
MAURICE A. SHASHOUA, P.E., INC.
1608 NW 112 Avenue
Coral Springs, FL 33071
(954)-753-1988
License Nos.[illegible]

NOVEMBER 6, 2003

To whom it may concern:

Re: TRUSS WEB BRACING
CUSTOM DESIGNED TRUSS CO

Dear sir or madam:

For any of the trusses designed by this office, where 1x4 lateral bracing is called for on our engineering sheets, the following may be substituted:

If one brace is called for, 1x4 "T" or "⊥" , Hem Fir or southern yellow pine may be used With 8d nails at 8 inches o.c.

If two brace are called for, 2x4 "T" or "⊥" Hem Fir or Southern Yellow Pine may be used With 12d nails at 8 inches o.c.

In all cases, the "T" or "⊥" brace must be installed and centered along at least 90% of the Length of the web.

Please let us know if you have questions reguarding the above.

Sincerely,

Morris A. Shashoua, P.E., Inc
Cc: CDT

MORRIS A. SHASHOUA, P.E.
MAURICE A. SHASHOUA, P.E. , INC.
1908 NW 112 AVE.
CORAL SPRINGS, FL. 33071
(954) 753-1988
FL. REG. NOS. EB5251 &19554

Morris A. Shashoua, P.E.
MAURICE A. SHASHOUA, P.E., INC.
1908 NW 112 Avenue
Coral Springs, FL 33071
(954) 753-1988
License Nos.EB5251 & 19554

R1 THIS DETAIL MAY BE USED WITH A TWO OR THREE PLY SUPPORTING GIRDER ONLY.

R1 UPLIFT CAPACITIES ARE BASED ON (4) 16D COMMON WIRE NAILS DRIVEN INTO EACH SIDE OF THE HANGER THRU THE NAIL HOLES PROVIDED AND INTO THE SUPPORTED MEMBER.

* THD26-2 TRUSS HANGER

** 16D NAILS

** BEARING BLOCK 18" LONG SAME SIZE AND GRADE AS SUPPORTED TRUSS BOTTOM CHORD. (SEE NAILING SCHEDULE FOR CONDITION "C" BELOW FOR DENSE LUMBER).

R1 + SEE THE "R1" REVISION OF DRAWING 652,902 FOR ADDITIONAL NAILING SCHEDULE FOR A 3 MEMBER SUPPORTING GIRDER ONLY.

FOR USE WITH 2x8 SOUTHERN PINE OR DOUGLAS FIR LARCH SUPPORTING GIRDER BOTTOM CHORD AND VARIOUS SUPPORTED TRUSS END CONDITIONS:

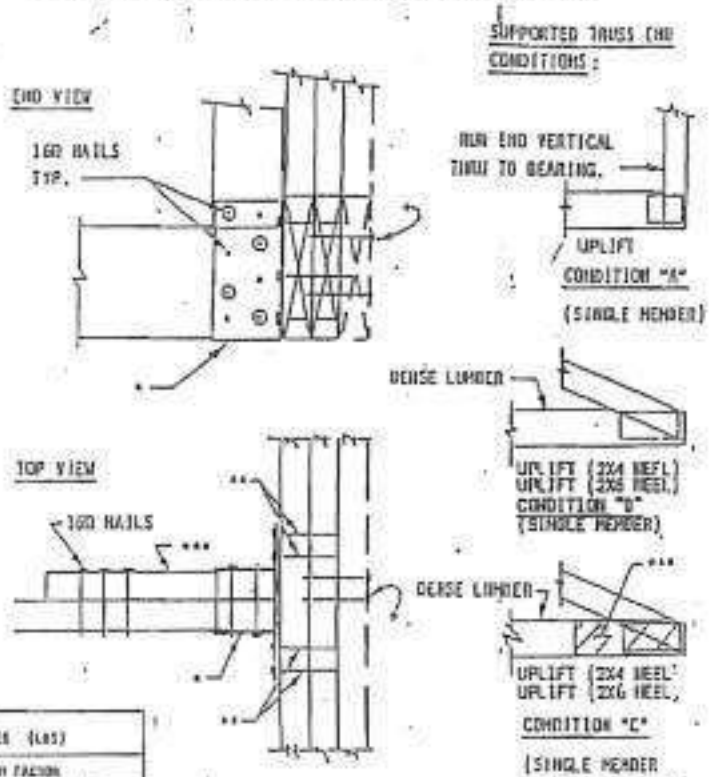

SUPPORTED TRUSS END CONDITION	+ TRUSS HANGER VALUES (LBS)			
	TRUSS MOSTER DURATION FACTOR			
	0	1.15	1.25	1.33
DOUBLE MEMBER OR SINGLE MEMBER WITH CONDITION "A".	5375	6000	6993	7035
SINGLE MEMBER CONDITION "B"	3465	3465	3465	3465
SINGLE MEMBER CONDITION "C" WITH (***)				
(10)16D NAILS	4375	4515	4665	4675
(20)16D NAILS	5375	5665	5745	5865
(30)16D NAILS	5375	6000	6993	7035

Custom Truss

2501 South Andrews Avenue
Fort Lauderdale, FL. 33316
954-786-8800
954-786-8804 (fax)

DESIGN CRITERIA

TOP CHORD:	2x4	19SP
BOT CHORD:	2x4	19SP
VERTICALS :	2x4	19SP

ALLOWED STRESS INCREASE : 1.33

TOP CHORD LIVE LOAD	PSF
TOP CHORD DEAD LOAD	PSF
BOTTOM CHORD DEAD LOAD	PSF
TOTAL LOAD	PSF

Morris A. Shashoua, P.E.
MAURICE A. SHASHOUA, P.E.,INC.
1908 NW 112 Avenue
Coral Springs, FL 33071
(954)-753-1988
License Nos.EB0281 & 10884

Level Soffit Detail For Slopes 5/12 and Greater

Lumber to be specified on truss design

Trusses shall be fastened to bearing walls with framing anchor or equivalent. In areas subject to hurricane winds, trusses shall be fastened with 1/8" x 1" steel strap anchor embedded in the beam and bent over Top Chord (Bottom Chord on cantilevered trusses) and secured with 5-16d nails. Other equivalent methods may be used. Solid members over 36" long shall be fastened to a 2x4 treated ledger with framing anchors; ledger to be bolted to wall every 48" (every 24" for overhang greater than 48").

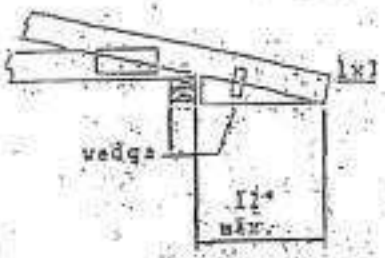

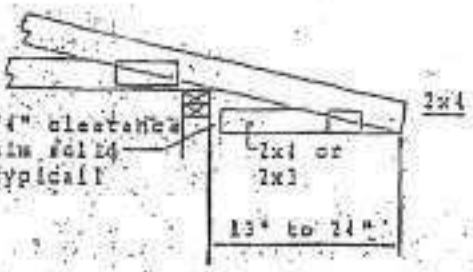

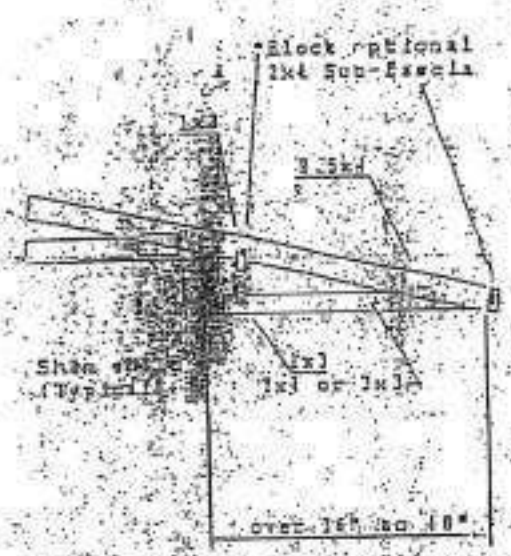

*Required with 1x3 Level Return

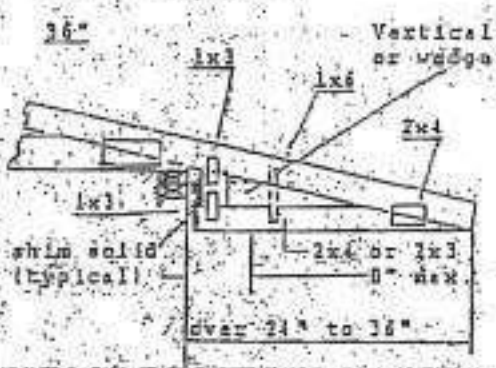

CANTILEVER WITH OVERHANG AND LEVEL SOFFIT (SEE CANTILEVERED TRUSS DESIGN)

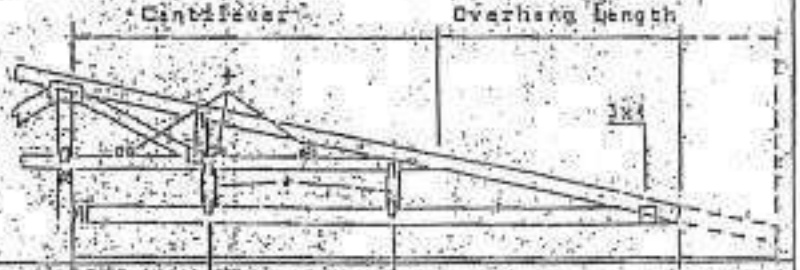

*2x4 BLOCKING AT OR NEAR PANEL POINTS (48" OC MAX) WITH 1x3 PLATES.

+2x4 #3 NON-FIR OR BETTER CONTINUOUS LATERAL BOTTOM CHORD BRACING REQUIRED @ 24" OC MAX. ATTACH WITH 2-16d NAILS. BRACING NOT REQUIRED IF RIGID CEILING IS ATTACHED DIRECTLY TO BOTTOM CHORD. BRACING MATERIAL TO BE SUPPLIED AND ATTACHED AT BOTH ENDS TO SUITABLE SUPPORT BY ERECTION CONTRACTOR.

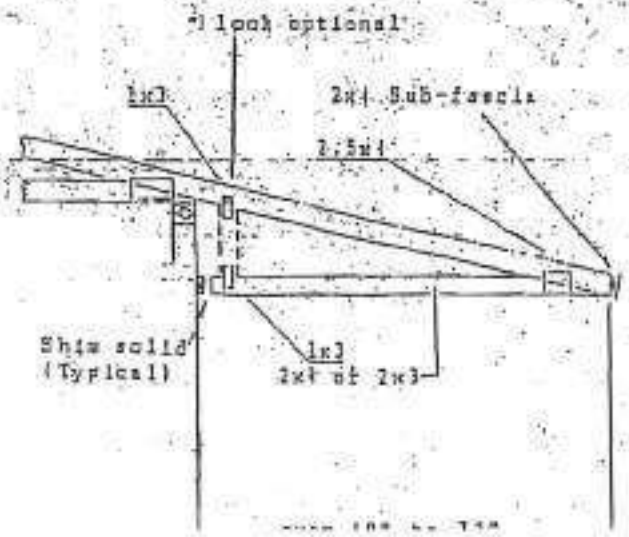

Morris A. Shashoua, P.E.
MAURICE A. SHASHOUA, P.E.,INC.
1908 NW 112 Avenue
Coral Springs, FL 33071
(954)-753-1988
License Nos.EB5251 & 19554

WARNING! BCSI B1 SUMMARY SHEET - GUIDE FOR

GENERAL NOTES

Trusses are not marked in any way to identify the frequency or location of temporary bracing. Follow the recommendations for handling, installing and temporary bracing of trusses. Refer to BCSI 1-03 Guide to Good Practice for Handling, Installing & Bracing of Metal Plate Connected Wood Trusses for more detailed information.

Truss Design Drawings may specify locations of permanent bracing on individual compression members. Refer to the BCSI-B1 Summary Sheet - Web Member Permanent Bracing/Web Reinforcement for more information. All other permanent bracing design is the responsibility of the Building Designer.

NOTAS GENERALE

Los trusses no están marcados de ningún modo identifique la frecuencia o locación de los arr (bracing) temporales. Use las recomendaciones de instalación y arriostre temporal de los trusses. Vea el BCSI 1-03 Guía de Buenas Prácticas para el Manejo, Instalación y Arriostre de los Trusses de Madera Conectados con Placas de Metálicas para mayor información.

Los dibujos de diseño de los trusses pueden especificar las localizaciones de los arriostres permanentes en los miembros individuales en compresión. Vea la hoja resumen BCSI-B1 para los arriostres permanentes y refuerzos de los miembros secundarios (webs) para mayor información. El resto de arriostres permanentes son la responsabilidad del Diseñador del Edificio.

⚠ The consequences of improper handling, installing and bracing may be a collapse of the structure, or worse, serious personal injury or death.

El resultado de un manejo, instalación y arriostre inadecuados, puede ser la caída de la estructura o aun peor, muertos o heridos.



⚠ Banding and truss plates have sharp edges. Wear gloves when handling and safety glasses when cutting banding.

Empaques y placas de metal tienen bordes afilados. Use guantes y lentes protectores cuando corte los empaques.

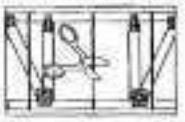



HANDLING — MANEJO

☑ Allow no more than 3" of deflection for every 10' of span.

No permita más de 3 pulgadas de pandeo por cada 10 pies de tramo.

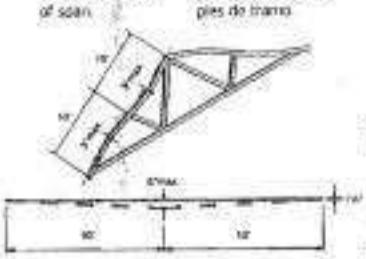

☑ Pick up vertical bundles at the top chord.

Levante de la cuerda superior los grupos verticales de trusses.



ONE WEEK OR LESS | MORE THAN ONE WEEK

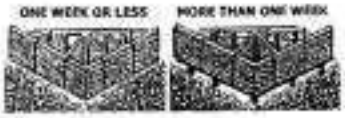

☑ Bundles stored on the ground for one week or more should be raised by blocking at 8' to 10' on center.

Los paquetes almacenados en la tierra por una semana o más deben ser elevados con bloques a cada 8 o 10 pies.

☑ For long term storage, cover bundles to prevent moisture gain but allow for ventilation.

Para almacenamiento por mayor tiempo, cubra los paquetes para prevenir aumento de humedad pero permita ventilación.

⚠ Use special care in windy weather or near power lines and airports.

Utilice cuidado especial en días ventosos o cerca de cables eléctricos o de aeropuertos.

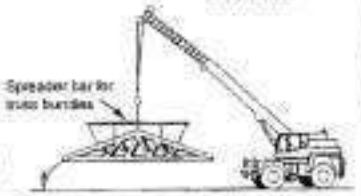

☑ Crack banding prior to moving bundles.

Revise los empaques antes de mover los paquetes de trusses.

⚠ Avoid lateral bending. — Evite la flexión lateral.



⊘ Do not store unbraced bundles upright.

No almacene verticalmente los trusses sueltos.



⊘ Do not store on uneven ground.

No almacene en tierra desigual.



HAND ERECTION — LEVANTAMIENTO A MANO

☑ Trusses 20' or less, support at peak.

Levante del pico los trusses de 20 pies o menos.

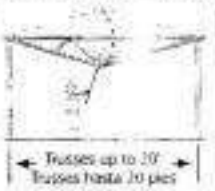

☑ Trusses 30' or less, support at quarter points.

Levante de los cuartos de tramo los trusses de 30 pies o menos.

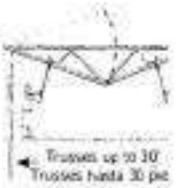

HOISTING — LEVANTAMIENTO

☑ Hold each truss in position with the erection equipment until temporary bracing is installed and truss is fastened to the bearing points.

Sostenga cada truss en posición con la grua hasta que el arriostre temporal esté instalado y el truss asegurado en los soportes.

⊘ Do not lift trusses over 30' by the peak.

No levante del pico los trusses de más de 30 pies.



HOISTING RECOMMENDATIONS BY TRUSS SPAN

RECOMMENDACIONES DE LEVANTAMIENTO POR LONGITUD DEL TRUSS

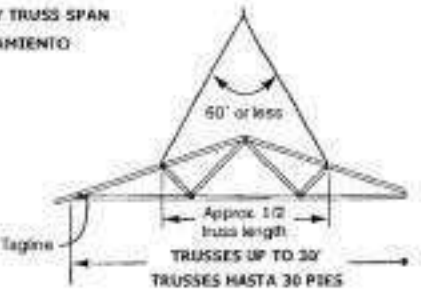



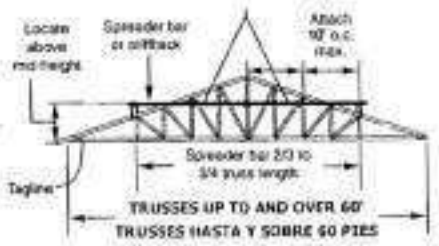

BRACING — ARRIOSTRE

⚠ Refer to BCSI-B2 Summary Sheet - Truss Installation and Temporary Bracing for more information.

Vea el resumen BCSI-B2 - Instalación de Trusses y Arriostre Temporal para mayor información.



⊘ Do not walk on unbraced trusses.

No camine en trusses sueltos.

☑ Locate ground braces for first truss directly in line with all rows of top chord temporary lateral bracing.

Coloque los arriostres de tierra para el primer truss directamente en línea con cada una de las filas de arriostres laterales temporales de la cuerda superior.

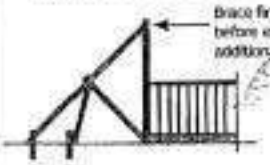

SD 16

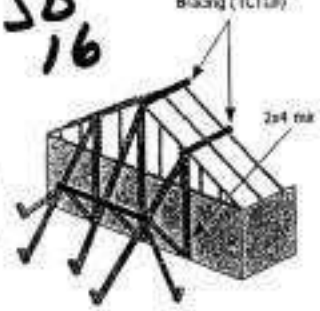

WARNING!

DLING, INSTALLING AND BRACIN OF METAL PLATE CONNECTED WOOD TRUSSES

BRACING FOR THREE PLANES OF ROOF
EL ARRIOSTRE EN TRES PLANOS DE TECHO

☑ This bracing method is for all trusses except 3x2 and 4x2 parallel chord trusses.
Este método de arriostre es para todos trusses excepto trusses de cuerdas paralelas 3x2 y 4x2.

1) TOP CHORD — CUERDA SUPERIOR

Truss Span Longitud de Trama	Top Chord Temporary Lateral Brace (TCTLB) Spacing Espaciamiento del Arriostre Temporal de la Cuerda Superior
Up to 30' Hasta 30 pies	10' o.c. max. 10 pies máximo
30' to 45' 30 a 45 pies	8' o.c. max 8 pies máximo
45' to 60' 45 a 60 pies	6' o.c. max. 6 pies máximo
60' to 80'* 60 a 80 pies*	4' o.c. max. 4 pies máximo

*Consult a Professional Engineer for trusses longer than 60'.
*Consulte a un ingeniero para trusses de mas de 60 pies.

☑ See BCSI-B2 for TCTLB options.
Vea el BCSI-B2 para las opciones de TCTLB.

⚠ Refer to BCSI-B6 Summary Sheet - Gable End Frame Bracing.
Vea el resumen BCSI-B6 - Arriostre del truss terminal de un techo a dos aguas.

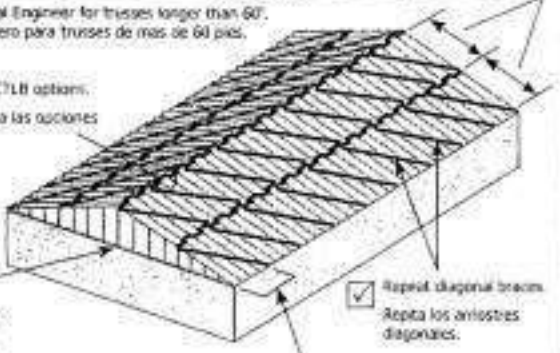

☑ Repeat diagonal braces.
Repita los arriostres diagonales.

☑ Set first five trusses with spacer pieces, then add diagonals. Repeat process on groups of four trusses until all trusses are set.
Instale los cinco primeros trusses con espaciadores, luego los arriostres diagonales. Repita éste procedimiento en grupos de cuatro trusses hasta que todos los trusses esten instalados.

2) BOTTOM CHORD — CUERDA INFERIOR

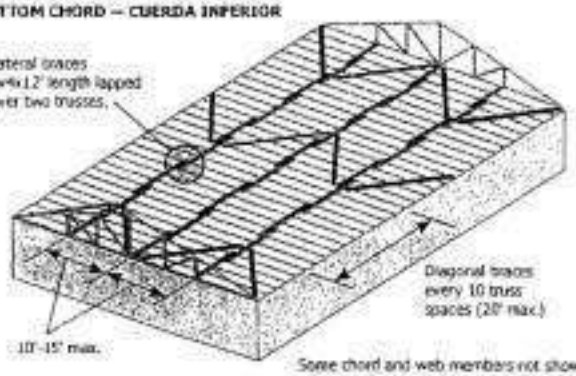

Some chord and web members not shown for clarity.

3) WEB MEMBER PLANE — PLANO DE LOS MIEMBROS SECUNDARIOS

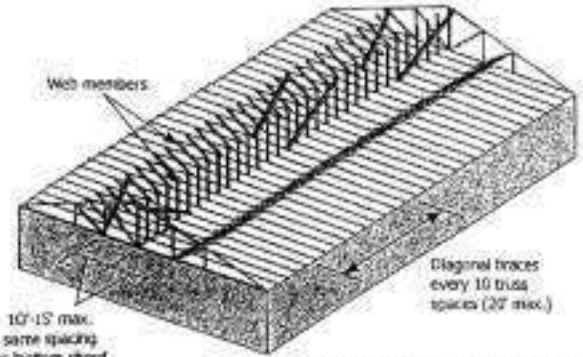

Some chord and web members not shown for clarity.

⚠ DIAGONAL BRACING IS VERY IMPORTANT ⚠
¡EL ARRIOSTRE DIAGONAL ES MUY IMPORTANTE!

BRACING FOR 3x2 AND 4x2 PARALLEL CHORD TRUSSES
EL ARRIOSTRE PARA TRUSSES DE CUERDAS PARALELAS 3x2 Y 4x2

⚠ Refer to BCSI-B7 Summary Sheet - Temporary and Permanent Bracing for Parallel Chord Trusses for more information.
Vea el resumen BCSI-B7 - Arriostre temporal y permanente de trusses de cuerdas paralelas para mayor información.

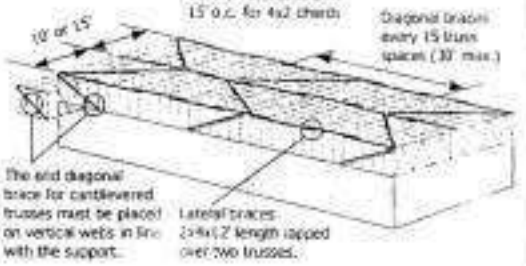

INSTALLING — INSTALACION

☑ Tolerances for Out-of-Plane — Tolerancias para Fuera-de-Plano

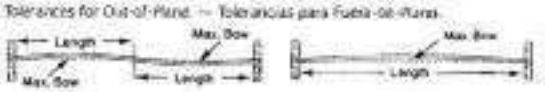

Max. Bow	Truss Length
3/4"	12.5'
7/8"	14.5'
1"	16.7'
1-1/8"	18.8'
1-1/4"	20.8'
1-3/8"	22.9'
1-1/2"	25.0'
1-3/4"	29.2'
2"	≥ 33.3'

☑ Tolerances for Out-of-Plumb.
Tolerancias para Fuera-de-Plomada.

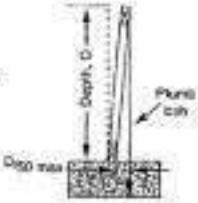

D/50	D (ft.)
1/4"	1'
1/2"	2'
3/4"	3'
1"	4'
1-1/4"	5'
1-1/2"	6'
1-3/4"	7'
2"	≥ 8'

CONSTRUCTION LOADING — CARGA DE CONSTRUCCION

⚠ Do not proceed with construction until all bracing is securely and properly in place.
No proceda con la construcción hasta que todos los arriostres estén colocados en forma apropiada y segura.

Maximum Stack Height for Materials on Trusses

Material	Height (h)
Gypsum Board	12"
Plywood or OSB	16"
Asphalt Shingles	2 bundles
Concrete Block	8"
Clay Tile	3-4 tiles high

⊘ Do not exceed maximum stack heights. Refer to BCSI-B4 Summary Sheet - Construction Loading for more information.
No exceda las máximas alturas recomendadas. Vea el resumen BCSI-B4 Carga de Construcción para mayor información.

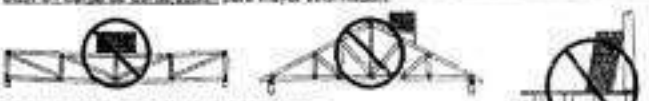

⊘ Do not overload small groups or single trusses.
No sobrecargue pequeños grupos o trusses individuales.

☑ Place loads over as many trusses as possible.
Coloque las cargas sobre tantos trusses como sea posible.

☑ Position loads over load bearing walls.
Coloque las cargas sobre las paredes soportantes.

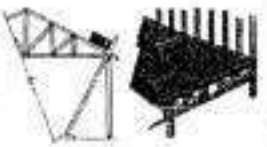

ALTERATIONS — ALTERACIONES

⚠ Refer to BCSI-B5 Summary Sheet - Truss Damage, Jobsite Modifications and Installation Errors.
Vea el resumen BCSI-B5 Daños de trusses, Modificaciones en la Obra y Errores de Instalación.

⊘ Do not cut, alter, or drill any structural member of a truss unless specifically permitted by the Truss Design Drawing.
No corte, altere o perfore ningún miembro estructural de los trusses, a menos que esté específicamente permitido en el dibujo del diseño del truss.



⚠ Trusses that have been overloaded during construction or altered without the Truss Manufacturer's prior approval may render the Truss Manufacturer's limited warranty null and void.
Trusses que se han sobrecargado durante la construcción o han sido alterados sin una autorización previa del Fabricante de Trusses, pueden reducir o eliminar la garantía del Fabricante de Trusses.

NOTE: The Truss Manufacturer and Truss Designer must rely on the fact that the Contractor and crane operator (if applicable) are capable to undertake the work they have agreed to do on a particular project. The Contractor should seek any required assistance regarding construction practices from a competent party. The methods and procedures outlined are intended to ensure that the overall construction techniques employed will put floor and roof trusses into place SAFELY. These recommendations for handling, installing and bracing wood trusses are based upon the collective experience of leading technical personnel in the wood truss industry, but must, due to the nature of responsibilities involved, be presented only as a GUIDE for use by a qualified Building Designer or Erection/Installation Contractor. It is not intended that these recommendations be interpreted as superior to any design specification (provided by either an Architect, Engineer, the Building Designer, the Erection/Installation Contractor or otherwise) for handling, installing and bracing wood trusses and it does not preclude the use of other equivalent methods for bracing and providing stability for the walls and columns as may be determined by the truss Erection/Installation Contractor. Thus, the Wood Truss Council of America and the Truss Plate Institute expressly disclaim any responsibility for damages arising from the use, application, or reliance on the recommendations and information contained herein.

WOOD TRUSS COUNCIL OF AMERICA
6300 Enterprise Lane • Madison, WI 53719
608/274-4849 • www.woodtruss.com

SDI9

TRUSS PLATE INSTITUTE
583 D'Onofrio Drive; Ste. 200 • Madison, WI 53719
608/833-5900 • www.tpinst.org

BMAPP11x17 20050501

This document summarizes Part 1 of an 11-part informational series titled Building Component Safety Information (BCSI 1-01) - Guide to Good Practice for Handling, Installing & Bracing of Metal Plate Connected Wood Trusses.
Copyright © 2004, 2005 Wood Truss Council of America and Truss Plate Institute. All Rights Reserved. This guide or any part thereof may not be reproduced in any form without the written permission of the publishers. Printed in the United States of America.

ALUMNO, ENTALACIÓN Y ARRIOSTRE DE LOS TRUSSES DE MADERA CONECTADOS CON PLACAS DE METAL

1150 E. ATLANTIC BLVD.
POMPANO BEACH
FLORIDA 33060

ACCURATE LAND SURVEYORS, INC.
L.B. #3635

SHEET 1 OF 2

TEL. (954) 782-1441
FAX. (954) 782-1442

TYPE OF SURVEY: **BOUNDARY**
01-4278C, 08-2722

JOB NUMBER: SU-08-1787

LEGAL DESCRIPTION:
LOT 17 AND EAST 1/2 OF LOT 18, BLOCK 89 OF HOLLYWOOD, ACCORDING TO THE PLAT THEREOF, AS RECORDED IN PLAT BOOK 1, PAGE 21, OF THE PUBLIC RECORDS OF BROWARD COUNTY, FLORIDA.

ADDRESS: **1404 JACKSON ST HOLLYWOOD, FL 33020**

FLOOD ZONE: **AE**
BASE FLOOD ELEVATION: **8' NGVD**
CONTROL PANEL NUMBER: **125113-0317-G**
EFFECTIVE: **REVISED: 10/2/1997**

LOWEST FLOOR ELEVATION: **5.09' NGVD**
GARAGE FLOOR ELEVATION: **N/A**
LOWEST ADJACENT GRADE : **4.7' NGVD**
HIGHEST ADJACENT GRADE : **4.9' NGVD**

REFERENCE BENCH MARK: **CITY OF HOLLYWOOD BM PG. 16 PK NAIL 5' N. C/L S. 14TH AVE. & JACKSON ST.**

CERTIFY TO:
1. MATHIAS KONDOLF
2.
3.
4.
5.
6.

EASEMENTS ACCORDING TO THE PLAT THEREOF:
NONE

ENCROACHMENTS ACCORDING TO THE PLAT THEREOF:
CONCRETE DRIVEWAYS ENCROACHES INTO RIGHT OF WAYS ALONG NORTH & SOUTH BOUNDARIES.

SCANNED
JAN 13 2011
BUILDING DIV.

NOTICE:

THIS SURVEY IS MADE FOR MORTGAGE AND TITLE PURPOSES ONLY AND SHOULD NOT BE USED FOR DESIGN OR CONSTRUCTION PURPOSES

NOTES:

1. THIS SURVEY CONSISTS OF A MAP AND A TEXT REPORT. ONE IS NOT VALID WITHOUT THE OTHER.
2. OWNERSHIP OF FENCES AND WALLS IF ANY, NOT DETERMINED.
3. THIS SURVEY IS MADE FOR THE EXCLUSIVE USE OF THE CERTIFIED HEREON. TO BE VALID ONE YEAR FROM THE DATE OF SURVEY AS SHOWN HEREON.

SEAL
NOT VALID WITHOUT THE SIGNATURE AND THE ORIGINAL RAISED SEAL OF A FLORIDA LICENSED SURVEYOR AND MAPPER.

LEGEND OF ABBREVIATIONS:

&	=	CENTRAL ANGLE	+7.00'	=	ELEVATIONS BASED ON N.G.V.D.	MAINT.	=	MAINTENANCE	ENCH.	=	ENCH
A	=	ARC LENGTH				B.C.R.	=	BROWARD COUNTY RECORDS	(M)	=	MEASURED
CB	=	CHORD BEARING	SQ. FT.	=	SQUARE FEET	D.C.R.	=	DADE COUNTY RECORDS	LP	=	LIGHT POLE
R	=	RADIUS	P.C.P.	=	PERMANENT CONTROL POINT	P.B.	=	PLAT BOOK	CONC.	=	CONCRETE
R/W	=	RIGHT OF WAY	P.B.C.R.	=	PALM BEACH COUNTY RECORDS	O.R.B.	=	OFFICIAL RECORDS BOOK	D.B.	=	DEED BOOK
P.C.	=	POINT OF CURVATURE	P	=	PLAT	F.F.	=	FINISHED FLOOR	CLF	=	CHAIN LINK FENCE
P.T.	=	POINT OF TANGENCY	N&D	=	NAIL & DISC	GAR.	=	GARAGE	BLVD.	=	BOULEVARD
WM	=	WATER METER	P.O.C.	=	POINT OF COMMENCEMENT	ELEC.	=	ELECTRIC	AD	=	ASSUMED DATUM
OH	=	OVERHANG	P.O.B.	=	POINT OF BEGINNING	SEC.	=	SECTION	I.P.	=	IRON PIPE
N	=	NORTH	A/C	=	AIR CONDITIONER	TWP.	=	TOWNSHIP	I.R.	=	IRON ROD
S	=	SOUTH	FND.	=	FOUND	RGE.	=	RANGE	P.R.M.	=	PERMANENT REFERENCE MONUMENT
E	=	EAST	CRATT	=	CHATTAHOOCHEE	C/L	=	CENTERLINE	N.G.V.D.	=	NATIONAL GEODETIC VERTICAL DATUM
W	=	WEST	STA.	=	STATION	MH	=	MANHOLE	U.E.	=	UTILITY EASEMENT
B.M.	=	BENCHMARK	F.P.L.	=	FLORIDA POWER & LIGHT	ESMT.	=	EASEMENT	D.E.	=	DRAINAGE EASEMENT
FH	=	FIRE HYDRANT	ELEV	=	ELEVATION				A.E.	=	ANCHOR EASEMENT
os	=	OFFSET									

1150 E. ATLANTIC BLVD.
POMPANO BEACH
FLORIDA 33060

ACCURATE LAND SURVEYORS, INC.

L.B. #3635

TEL. (954) 782-1441
FAX. (954) 782-1442

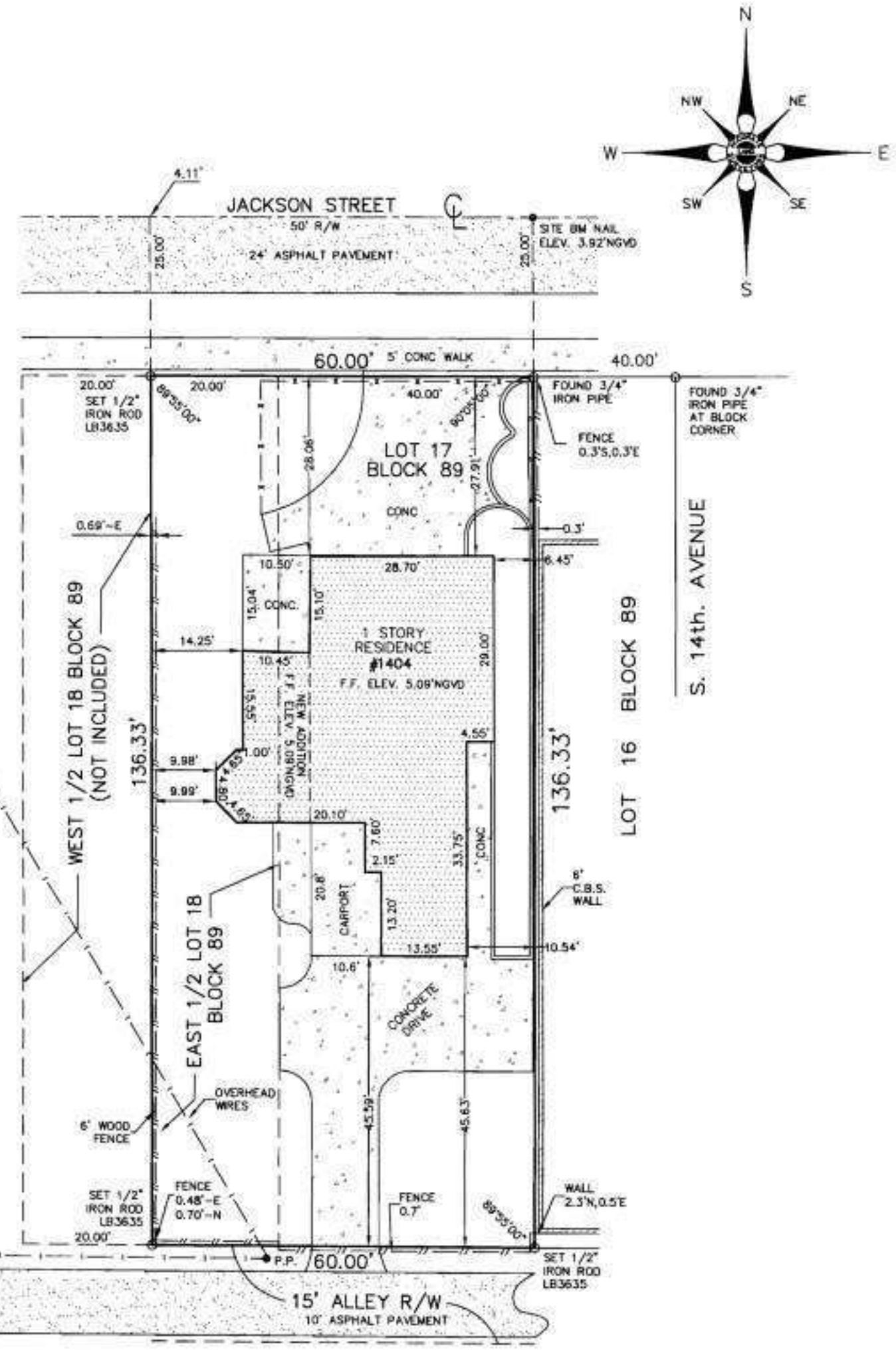

6.69'

ELEVATIONS BASED ON N.G.V.D.

SCANNED JAN 13 2011 BUILDING DIV

20 0 10 20

GRAPHIC SCALE
1"=20'

NOTES:

1. UNLESS OTHERWISE NOTED FIELD MEASUREMENTS ARE IN AGREEMENT WITH RECORD MEASUREMENTS.
2. BEARINGS SHOWN HEREON ARE BASED ON A BEARING OF N/A.
3. THE LANDS SHOWN HEREON WERE NOT ABSTRACTED FOR OWNERSHIP, RIGHTS-OF-WAY, EASEMENTS, OR OTHER MATTERS OF RECORDS BY ACCURATE LAND SURVEYORS, INC.
4. OWNERSHIP OF FENCES AND WALLS IF ANY NOT DETERMINED.
5. THIS DRAWING IS THE PROPERTY OF ACCURATE LAND SURVEYORS, INC. AND SHALL NOT BE USED OR REPRODUCTED IN WHOLE OR IN PART WITHOUT WRITTEN AUTHORIZATION.
6. THIS SURVEY CONSISTS OF A MAP AND TEXT REPORT. ONE IS NOT VALID WITHOUT THE OTHER.
7. THIS SURVEY IS MADE FOR THE EXCLUSIVE USE OF THE CERTIFIED HEREON, TO BE VALID ONE YEAR FROM THE DATE OF SURVEY AS SHOWN.

CERTIFICATION:

THIS IS TO CERTIFY THAT I HAVE RECENTLY SURVEYED THE PROPERTY DESCRIBED IN THE FOREGOING TITLE CAPTION AND HAVE SET OR FOUND MONUMENTS AS INDICATED ON THIS SKETCH AND THAT SAID ABOVE GROUND SURVEY AND SKETCH ARE ACCURATE AND CORRECT TO THE BEST OF MY KNOWLEDGE AND BELIEF. I FURTHER CERTIFY THAT THIS SURVEY MEETS MINIMUM TECHNICAL STANDARDS UNDER RULE 61G17-6 FLORIDA ADMINISTRATIVE CODE, ADOPTED BY THE FLORIDA BOARD OF LAND SURVEYORS, MAY 1995.

SEAL
NOT VALID WITHOUT THE SIGNATURE AND THE ORIGINAL RAISED SEAL OF A FLORIDA LICENSED SURVEYOR AND MAPPER.

10-30-08

ROBERT L. THOMPSON (PRESIDENT)
PROFESSIONAL SURVEYOR AND MAPPER No.3869 - STATE OF FLORIDA

REVISIONS	DATE	BY
FINAL SURVEY SU-08-2722	10-28-08	AL/JNS
SPOT SURVEY SU-08-1787	07-10-08	AL/JNS

DATE OF SURVEY	DRAWN BY	CHECKED BY	FIELD BOOK	SCALE	SKETCH NUMBER
6-5-01 & 7/9/01	Q.D.J.	J.P.H.	756/1-2 & 755/75-76	SCALE 1"=20'	SU-01-4278C

ALL DIMENSIONS AND CONDITIONS THAT EFFECT WD. TRUSSES MUST BE VERIFIED BY BUILDER AND/OR ARCHITECT BEFORE ANY PRODUCTION OF WD. TRUSSES.

IF THERE ARE NO MARKUPS ON LAYOUT, THEN TRUSSES WILL BE BUILT AND CD TRUSS WILL NOT BE BACK-CHARGED FOR ANY ITEMS LISTED OF THE RETURNED LAYOUT.

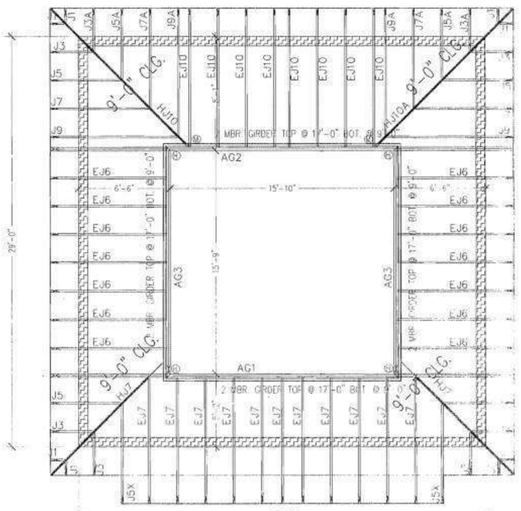

ROOF TRUSS LAYOUT

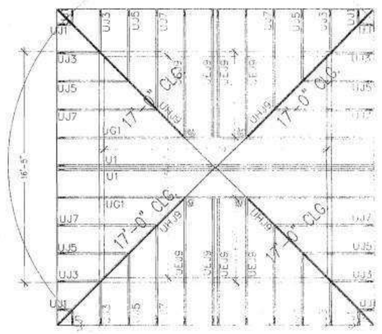

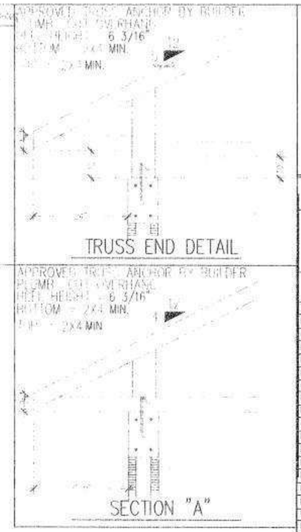

TRUSS HANGER INFORMATION
(USED BY OTHERS)

NOTES:
Where TRUSS ENGINEERING for gravity and uplift loads value exceeds the capacity of a hanger shown, it is the responsibility of the builder to provide adequate AP 2 ply hanger values are based on [illegible]

HANGER		GRAVITY			FASTENER
	CONN	ROOF	FLOOR	UPLIFT	QTY
A	HUS26	2x6	5335	2780	1550	14 - 10d
B	HUS28	2x8	3655	1380	2000	22 - 10d
C	HTU26-2 (MIN)	2x6	3840	2880	1515	14 - 10d
D	HTU26-2 (MAX)	2x6	3840	3310	2174	20 - 10d
E	HGUS26-2	2x6	5240	3940	2305	20 - 16d
F	HTU28-2 (MIN)	2x8	4305	3745	1560	26 - 10d
G	HTU28-2 (MAX)	2x8	4990	3745	3485	26 - 16d
H	HGUS28-2	2x8	7925	6805	3220	36 - 16d
I	HGUS28-3	2x8	7925	6805	3220	36 - 16d
J	HHUS46	2x6	4930	3940	2325	20 - 16d
K	HSUR46/HSUR46	2x6	2000	1610	845	12 - 10d
L	THJU26	2x4	1915	1915	745	16 - 10d
M	THJU26	2x6	2350	2350	1310	16 - 10d
N	MTHM	2x4	2915	2915	1075	22 - 10d
O	MTHM	2x6	3505	3505	1075	30 - 10d
P	SUL26/SUR26	2x6	1300	900	765	14 - 10d
Q	PBUS6-2/PBUS6	2x6	2000	1610	845	12 - 10d
R	IHG02-5253	2x6	17445	17651	4535	36 - 16d
S	IHG23-5054 S	2x8	11635	11635	4535	28 - 16d
T	IHG04-5056	2x8	14335	14280	9960	56 - 16d
Z	CONNECTION BY BLDR					

TRUSS LOADING CONDITIONS

ROOF TRUSSES		FLOOR TRUSSES
TOP CHORD LIVE	30	TOP CHORD LIVE
TOP CHORD DEAD	15	TOP CHORD DEAD
BOTTOM CHORD DEAD	10	BOTTOM CHORD
TOTAL LOAD (PSF)	55	TOTAL LOAD
DURATION FACTOR	1.33	DURATION FACTOR

THIS TRUSS SYSTEM HAS BEEN DESIGNED WITH LIVE LOADS AND WIND LOADS. ANY TOP CHORD DEAD LOAD OR BOTTOM CHORD DEAD LOAD APPLIED FROM CEILING, ATTIC, FLOOR OR OTHER AREAS

*** IMPORTANT INFORMATION ***

ALL REACTIONS, UPLIFTS, ETC. ARE THE RESPONSIBILITY OF THE ENGINEER OF RECORD, PER LOCAL CODE. REFER TO THE STRUCTURAL FRAMING FOR INFORMATION. CDI IS NOT AND WILL NOT TAKE ANY RESPONSIBILITY FOR ANY TYPE OF THIS INFORMATION. THIS INFORMATION IS THE SOLE RESPONSIBILITY OF THE ENGINEER OF RECORD.

BEARING HEIGHT DISCLAIMER:
IT IS THE SOLE RESPONSIBILITY OF THE ARCHITECT OR PROJECT ENGINEER REGARDING BEAM ELEVATIONS AND BREAK LOCATIONS FOR CHANGES IN BEAM HEIGHTS. CDI BEAM HEIGHT SCHEDULE IS A GUIDELINE ONLY. REFER TO ARCHITECTURAL AND STRUCTURAL DRAWINGS FOR THIS INFORMATION. CDI IS NOT AND WILL NOT BE RESPONSIBLE FOR THIS INFORMATION.

Field BRACING is not the responsibility of the truss designer or plate manufacturer. Persons erecting trusses are cautioned to seek professional advice regarding temporary and permanent bracing which is always required during erection, and permanent bracing which may be required in specific applications. Temporary and permanent bracing is to be installed and plumb prior to loading. Failure to do so may result in collapse of the truss(es) and/or building. Trusses must not be cut or altered in any manner. Where two piece trusses are specified, the two pieces must be fastened together before any other construction is applied. Refer to BCSI-B1 Summary Sheet for more information.

SHOP DRAWING APPROVAL

THIS TRUSS PLACEMENT PLAN MUST BE APPROVED PRIOR TO COMMENCING TRUSS ENGINEERING OR FABRICATION. THE BUILDER MUST VERIFY THE COORDINATION OF ALL THE INFORMATION IN THIS PLAN WITH THE ARCHITECTURAL OR STRUCTURAL DRAWINGS. ANY VARIATIONS BETWEEN THE FINAL PLACEMENT PLAN AND THE ARCHITECTURAL OR STRUCTURAL PLANS IS THE SOLE RESPONSIBILITY OF THE CUSTOMER AND ANY EXPENSES INVOLVED IN CHANGES AFTER TRUSS FABRICATION IS THE RESPONSIBILITY OF THE CUSTOMER AND NOT CUSTOM TRUSS INDUSTRIES

VERIFY ALL DIMENTIONS, GIRDER LOCATIONS, [illegible] END DETAILS, PITCH [illegible] ASSUME DOWN FRAMING, DROP CEILING [illegible]

SCANNED APR 27 2009

APPROVED
APR 13 2009
CITY OF HOLLYWOOD, FLA.
STRUCTURAL

ROBERT G. ISHMAN P.A.
ARCHITECT
2117 HOLLYWOOD BLVD.
HOLLYWOOD, FLORIDA 33020
Lic# AR-0012684 / AA- C001769
Tel.# (954) 929-9695 / Fax # (954) 929-9597
RGIPA@MINDSPRING.COM

PRELIMINARY
REVISIONS
APPROVED YES
SIGNATURE-x
Date: 4/8/09

4/3/09

CUSTOM TRUSS

JOE HART BUILDER INC

ADDITION

1404 JACKSON ST. HOLLYWOOD

THESE DOCUMENTS HAVE BEEN PREPARED ACCORDING TO THE FOLLOWING REQUIREMENTS- FLORIDA BUILDING CODE 2004 & LATEST EDITION of AMENDMENTS, ASCE 7
140 MPH
CATEGORY 'C'

GENERAL NOTES-

- CONTRACTOR AND SUB CONTRACTORS SHALL VISIT SITE AND VERIFY ALL CONDITIONS BEFORE PROCEEDING WITH ANY COMMENCEMENT OF WORK OR ANY MATERIAL ORDERING. NOTIFY THIS ARCHITECT AND ENGINEERS OF ANY ERRORS, OMISSIONS OR CHANGES BEFORE COMMENCEMENT OF PROJECT.
- MANUFACTURER FOR TRUSSES, STRUCTURAL STEEL FABRICATION SHALL SUBMIT TO THIS ARCHITECT SHOP DRAWINGS FOR APPROVAL BEFORE FABRICATION AND SUBMISSION TO THE BUILDING DEPARTMENT.
- CONTRACTOR SHALL NOTIFY ALL APPROPRIATE UTILITY COMPANIES BEFORE ANY EXCAVATION HAS COMMENCED AND TO VERIFY EXISTING SERVICE LINES AND POSSIBLE HAZARDS.
- INTERIOR PARTITIONS (NON-BEARING) SHALL BE 1/2' GYPSUM WALLBOARD ON EACH SIDE OF 2'x 4' WOOD STUDS or 25 ga METAL 'C' SHAPED STUDS SPACED 24' ON CENTER, UNLESS OTHERWISE SPECIFIED.
- ALL WOOD IN CONTACT WITH CONCRETE SHALL BE TREATED OR OTHERWISE PROTECTED WITH TYPE 30 FELT MEMBRANE BARRIER.

WOOD NOTES

- WOOD GRADE FOR STUDS AND TOP PLATES SHALL BE SOUTHERN PINE - STANDARD GRADE. BASE PLATES SHALL BE No. 2 SOUTHERN PINE TREATED SURFACE DRY USED AT MAX. 15% MOISTURE CONTENT.
- STRUCTURAL GRADE LUMBER SHALL BE MIN. Fb = 1200 PSI UNLESS OTHERWISE SPECIFIED.
- NAILS FOR-
  STUD TO STUD PLATE - (2) 16d
  STUD TO SOLE PLATE / TOE NAIL- (2) 8d
  DOUBLE TOP PLATE- (2) 16d NAIL @ 12'o.c.
- TOP PLATES IN BEARING WALLS SHALL BE DOUBLED AND LAPPED AT INTERSECTION OF WALLS AND PARTITIONS.
  JOINTS SHALL BE LAPPED NOT LESS THAN (4) FEET
- CORNER OF STUD WALLS SHALL BE FRAMED SOLID BY NOT LESS THAN (3) STUDS WITH 16d NAILS @ 12' o.c. CORNER STUD SECURED TO (3) MEMBER STUDS (2) 16d NAILS @ 6'o.c.
- TOP PLATES IN NON-BEARING PARTITIONS SHALL BE SINGLE
- SOLE PLATES IN NON-BEARING PARTITIONS SECURE TO CONCRETE SLAB WITH TAPCON FASTENER 1/4'x 1-1/2' EMBED or
  HILTI POWDER ACTUATED FASTENER PIN DN 72 P08 x 0.145 SHANK Dia.
  SPACE FASTENERS AT 32'o.c.
- CEILING FURRING STRIPS SHALL BE SOUTHERN PINE 1'x 3' WOOD SECURED TO WOOD JOISTS, TRUSSES SPACED 16'o.c. WITH (2) 8d NAILS COMMON.
- WALL FURRING AND CONTINOUS FIRE STOP FOR CONCRETE, MASONRY WALLS SHALL BE 1'x 2' TREATED PINE SPACED 24'o.c. HORIZONTAL AND MAX. 8ft. HIGH VERTICAL
  PROVIDE FORE STOP ABOVE 8ft.
  SECURE TO CONCRETE WITH CUT NAILS OR 'T' NAILS SPACED @ 16'o.c.
- WHERE VERTICAL PIPES POSITIONS NECESSITATE THE CUTTING OF PLATES, A METAL TIE 1'x 1/8' SHALL BE PLACED EACH SIDE OF WOOD PLATE ACROSS THE OPENING 6' PAST AND NAILED WITH (2) 16d od 8d COMMON NAILS AT EACH END.
- HEADERS OR LINTELS OVER STUD WALL OPENINGS SHALL BEAR NOT LESS THAN (3) 2x JACK STUDS or HANGER SECURED TO NOT LESS THAN (3) KING STUDS.
- WHERE STUD WALLS OR PARTITIONS JOIN MASONRY WALLS, SUCH STUDS SHALL BE SECURED AGAINST LATERAL MOVEMENT BY BOLTING TO THE MASONRY OR CONCRETE WITH 1/2 INCH DIAMETER ANCHOR BOLTS WITH OVERSIZED WASHER SPACED NOT MORE THAN 4 FEET APART AND EMBEDDED NOT LESS THAN 5 INCHES INTO A GROUTED CELL OR INTO CONCRETE.

GYPSUM WALLBOARD-

- WALLBOARD SHALL BE ASTM C36-85 REGULAR 1/2' / ASTM C36-85 TYPE 'X' FIRE RATED / ASTM C117 (MOISTURE RESISTANT) UNLESS SPECIFIED OTHERWISE.
- JOINT TREATMENT SHALL BE COMPOUND AND TAPE (READY MIX) ASTM C475-88
  CORNER BEAD ASTM C1041-85
  PANEL ADHESIVE SHALL BE STA-STUCK SS-200, ASTM C-557-73
- PROVIDE MIN. 1/2' AIR GAP BETWEEN FLOOR AND WALLBOARD BOTTOM
- ATTACHMENTS FOR WALLBOARD TO SUPPORTS SHALL BE-
  METAL STUDS- TYPE W 1-1/4' DRYWALL SCREWS SPACED @ 12'o.c.
  WOOD STUDS & FURRING- NAILS GWB-54 ANNUAL RING 1/4' HEAD, 098 Dia SHANK
  ATTACHMENT SPACING / CEILING- 7' o.c. / WALLS- 8' o.c.

METAL STUD WALL - NON BEARING GALVALUME STEEL

SCREW STUD TRACK- 0179' BASE STEEL x 3-5/8' WIDE
STUDS- 'C' SHAPED SCREW STUDS, ASTM C645 x 0179' BASE STEEL
SCREWS- TYPE S-12 LOW PROFILE (2) SCREWS PER ATTACHMENT (METAL to METAL)
HILTI SHOT THROUGH BASE TRACK TO CONCRETE- PIN DN 19 P08 x .145' Dia. SHANK
CEILING METAL TRACK TO WOOD FURRING- TYPE -W SCREW x 1-1/4' SPACED @ 24'o.c.
METAL FURRING- ASTM C645 / 7/8' x .179' BASE STEEL
WIRE LATH-
- SOFFIT- 3/8' RIB LATH, OVERLAP EDGES ONE (1') ATTACHMENTS FOR SECURING LATH TO SUPPORTS SHALL BE SPACED NOT MORE THAN 6' APART AND SIDE LAPS SHALL BE SECURED TO SUPPORTS AND TIED BETWEEN SUPPORTS AT NOT TO EXCEED 9' INTERVALS. ATTACHMENTS TO CEILING SUPPORTS SHALL BE No. 11 ga x 1' LONG WITH 3/4' Dia. HEAD.
  PROVIDE TYPE 30 ROOF FELT BETWEEN ALL WOOD AND LATH

- STUCCO

- ASTM C926 / (1) PART PORTLAND CEMENT TO A MAX. 2-1/2 PARTS SAND BY VOLUME (MIXED PROPORTION)
- MASONRY APPLICATION- BASE COAT / FINISH COAT
- RIB LATH- (3) COAT APPLICATION / Min. 1/2' THICKNESS
- PLASTIC PC COMPONENTS- PVC ACCESSORIES & PLASTIC LATH

- INSULATION

FIBERGLASS BATT - ATTIC R-30
SINGLE ASSEMBLY R-19
PARTITIONS 4', R-11 / 6' R-19
EXTERIOR WALLS- FRAME 6', R-19
MASONRY R 4.1 MINIMUM
R 5.4 CELOTEX INSULATING SHEATHING 3/4'
CONCRETE SLAB FLOOR R-0
FRAME FLOOR R-19

ROOF NOTE

BUILT-UP ROOF

MINERAL SURFACED CAP SHEET (WHITE FLINTLASTIC MODIFIED BITUMEN - HOT MOPPED 12ga x 1-1/4' CORROSION RESISTANT ON TYPE 30, ASTM D226, TYPE II ORGANIC FELT APPLIED TO THE DECK IN SHINGLE FASHION. THE UNDERLAYMENT SHALL BE SECURED TO THE DECK WITH MINIMUM 12 ga x 1-1/4' CORROSION RESTANT ROOFING NAILS AND A MINIMUM 32 ga x 1-5/8' Dia. TIN CAPS SPACED FOR 'PERIMETER' ROOF EDGE (4 ft) 6' LAPS, 2 ROWS @ 6' MIDSHEET AND 'FIELD' 6' @ LAPS, 2 ROWS @ 12' MIDSHEET.
EDGE METAL SHALL BE .021' (26ga), 2-1/2'x 2-1/2' GALVANIZED AND NAILED OVER THE TOP OF THE UNDERLAYMENT AT 4' ON CENTER WITH MIN. 12ga x 1-1/4' CORROSION RESISTANT ROOFING NAILS AT ALL PERIMETERS, AT CORNERS. THE ENDS OF ADJOINING EDGE METAL SHALL BE OVERLAPPED FOR (5') NOTCHED AND BENT AROUND CORNERS METAL EDGE SHALL BE OVERLAPPED NOT LESS THAN (3').

ROOF SHEATHING- 19/32' CD PLYWOOD - SPAN RATING 40/20
FASTENERS- NAILS (8d) COMMON, SPACED @ (6') ON CENTER OVER ALL SUPPORTS AND BLOCKING UNLESS SPECIFIED OTHERWISE
ROOF SHEATHING NAILED AT (4') ON CENTER AT PERMITER EDGE AND FIELD PERIMETER EDGE DISTANCE (4 FEET)
ROOF SHEATHING SPACING BETWEEN PANELS AS PER MANUFACTURER REQUIREMENTS. (1/8')
SUPPORTS- MINIMUM (3) TRUSS, JOISTS

ATTIC VENTILATION- 1/ 150 RATIO
1/300 RATIO WITH ROOF VENTILATORS 3ft. ABOVE EAVE

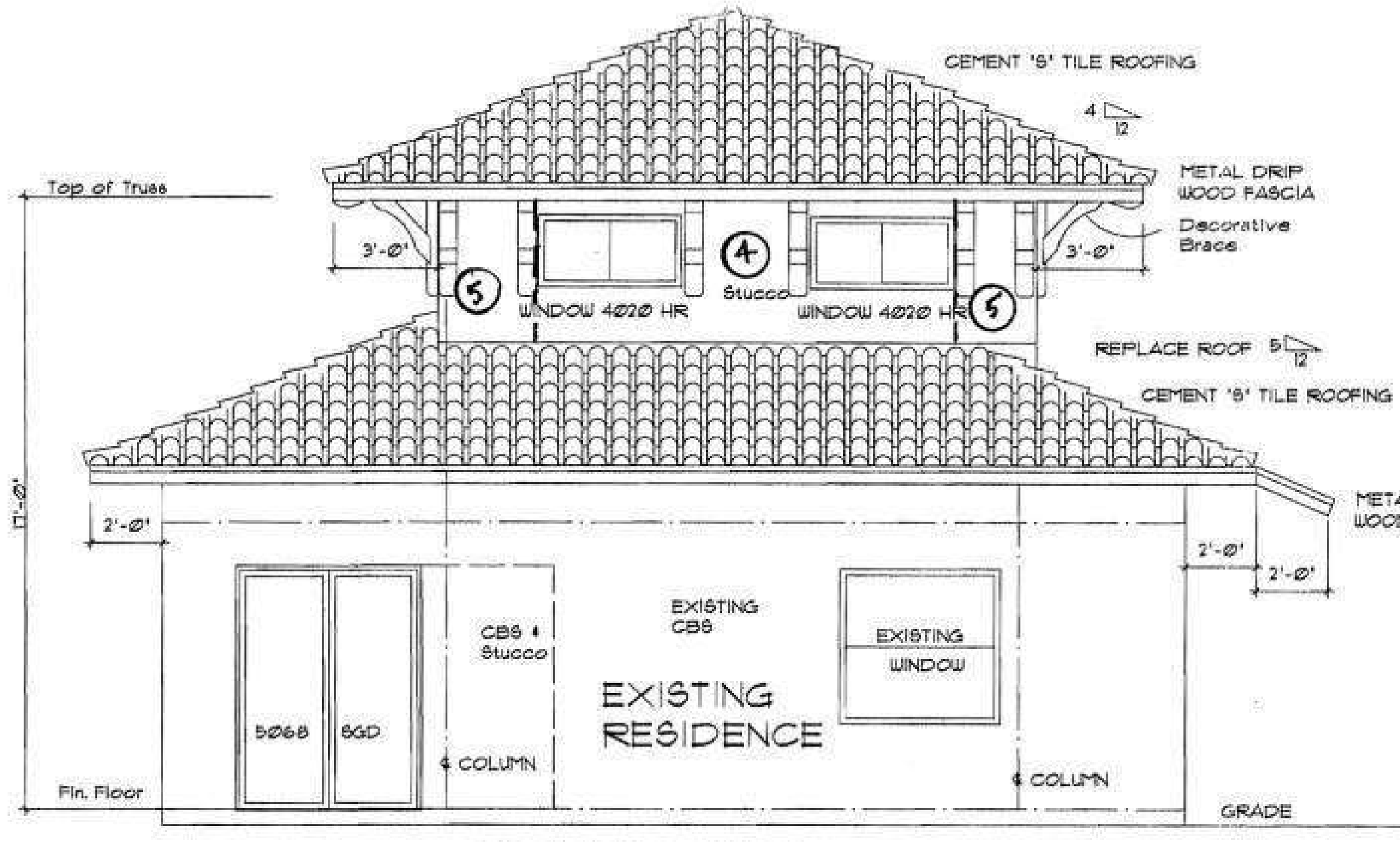

STDE ELEVATION

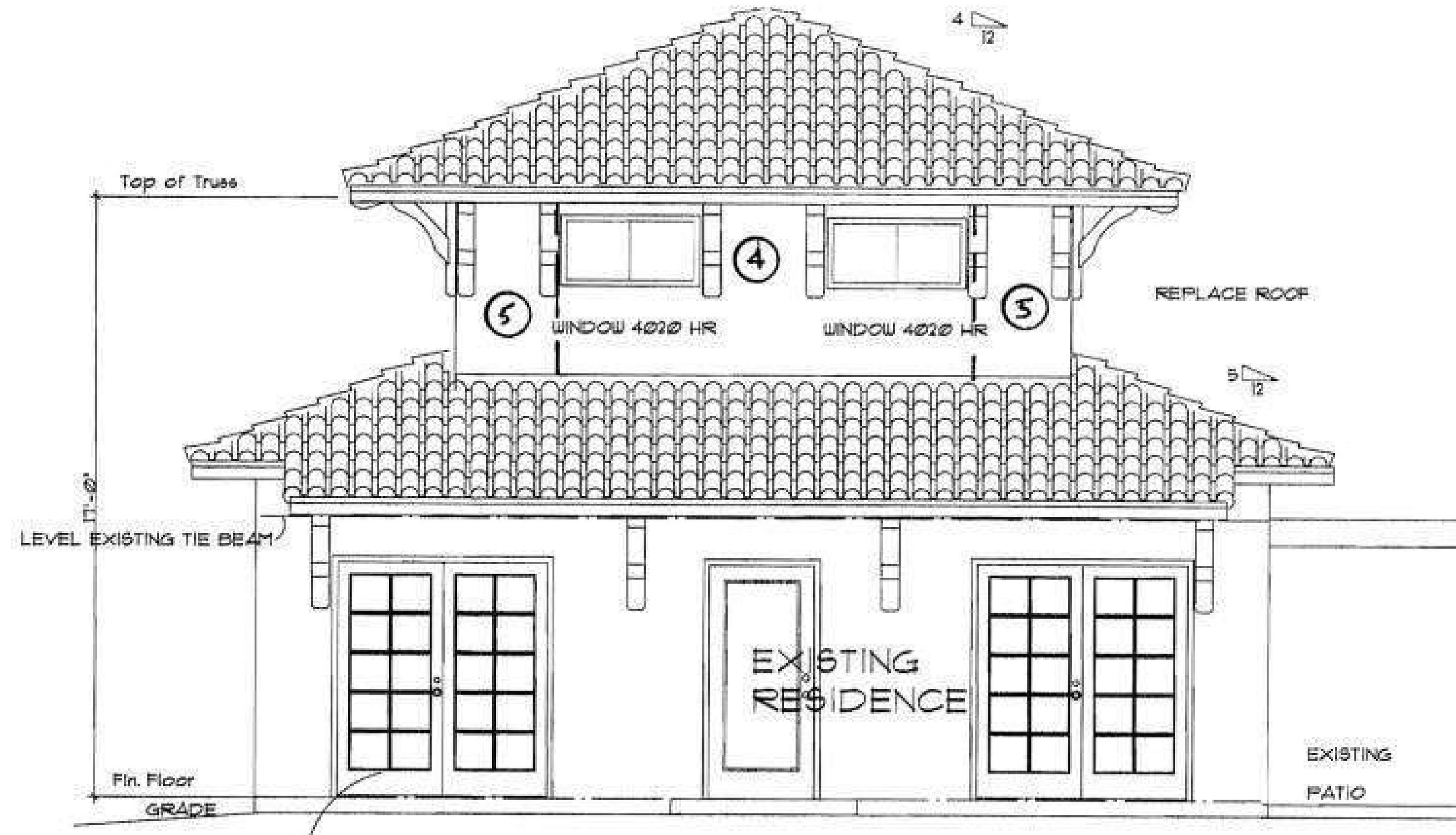

FRONT ELEVATION

EXISTING RESIDENCE

FOUNDATION STATEMENT SEE SOIL ENGINEERS REPORT FOR PILING RECOMMENDATIONS

- A SOIL ENGINEERING TESTING LAB SHALL PROVIDE A REPORT OF EXISTING SOIL CONDITIONS A MAKE RECOMMENDATIONS FOR FOUNDATION REQUIREMENTS FOR THE INTENDED PROJECT.
- MASONRY BLOCK - TYPE S or M MORTAR, 9 GA LADDER REINF. @ 16" o.c. WALL TIES @ 16" @ MASONRY JOINT

ELECTRIC NOTES

- ALL ELECTRIC WORK SHALL BE IN ACCORDANCE WITH THE NATIONAL ELECTRIC CODE.
- MOUNT ALL SWITCHES 42' AFF. AND ALL RECEPTACLES 18' AFF.
  MOUNT WALL HUNG FIXTURES NOT LOWER THAN 80' AFF. TO BOTTOM OF FIXTURE.
- OWNER / CONTRACTOR SHALL SELECT LIGHT FIXTURES TYPE AND SUBMIT TO ARCHITECT FOR APPROVAL FOR LOCATION USAGE.
- ALL EXTERIOR RECEPTACLES (WEATHER PROOF) FOR GENERAL PURPOSE AND BATHROOM / RESTROOM SHALL HAVE GROUND FAULT CIRCUIT INTERRUPTER.
- SMOKE DETECTORS SHALL BE 110 Volt WITH BATTERY BACK UP TYPE, INTERCONNECTED HARDWIRED TO NON SWITCHABLE INDIVIDUAL CIRCUIT. LOCATE ON OR NEAR CEILING IN THE IMMEDIATE VICINITY OUTSIDE AND INSIDE BEDROOMS AT DOORWAY AND AT STAIRWAY LANDINGS. LOCATE NO CLOSER THAN 3 Feet TO A/C DIFFUSER GRILL.
- THE ELECTRICAL CONTRACTOR SHALL NOTIFY ARCHITECT OF ANY CHANGES TO EQUIPMENT LOADS DIFFERENT THAN SCHEDULE PANEL LOADS.
- GROUNDING ELECTRODES SHALL BE COPPER THW IN ON CONTINOUS LENGTH OR SPLICES IN BUSBARS SHALL BE PERMITTED AND SHALL BE ENCLOSED IN CONDUIT ENCLOSURE SECURELY FASTENED TO THE SURFACE ON WHICH IT IS CARRIED TO EXPOSED CONNECTIONS FOR GROUNDING. METHODS FOR SECURING GROUND SHALL BE PERMANENT. PROVIDE GROUNDING ELECTRODES FROM ALL SERVICE EQUIPMENT OR SEPERATLEY DERIVED SYSTEM TO WATER PIPE OR STRUCTURAL METAL BUILDING MEMBER AND FROM THAT POINT TO ONE OF THE ELECTRODES SHOWN FOR GROUNDING.
- BONDING SHALL BE PROVIDED WHERE NECESSARY TO ASSURE ELECTRICAL CONTINUITY AND THE CAPACITY TO CONDUCT SAFELY ANF FAULT CURRENT LIKELY TO BE IMPOSED. ALL NON-CURRENT CARRYING METAL PARTS OF SERVICE EQUIPMENT SHALL BE EFFECTIVELY BONDED TOGETHER.
  AN ACCESSIBLE MEANS EXTERNAL TO ENCLOSURES FOR CONNECTING INTER-SYSTEM BONDING AND GROUNDING CONDUCTORS SHALL BE PROVIDED AT THE SERVICE BY EITHER EXPOSED METALLIC SERVICE RACEWAYS, EXPOSED GROUNDING ELECTRODES CONDUCTOR OR APPROVED MEANS FOR THE EXTERNAL CONNECTION OF A BONDING, OR GROUNDING CONDUCTOR TO THE SERVICE RACEWAY OR EQUIPMENT.
  METHODS OF BONDING SHALL BE BY SCREWS, CLIPS, THREADED COUPLING AND CONNECTORS, BONDING JUMPERS OR OTHER DEVICES SUCH AS BONDING TYPE LOCKNUTS AND BUSHINGS.
- TESTING- ALL WIRING SHALL BE FREE FROM SHORT CIRCUITS AND GROUNDS AND SHALL BE TESTED FOR THESE DEFECTS PRIOR TO BEING CONNECTED TO THE CIRCUITS.
- GROUNDING CONDUCTOR MATERIAL TYPE AND SIZE AS PER PANEL SCHEDULE AND RISER. PROTECTION OF CONDUCTORS SHALL BE BY CONDUIT, BOXES AND COVERS STUD PLATES AND SLEEVES, RACEWAY ETC.TO INSURE ADEQUATE PROTECTION OF CONDUCTORS AGAINST DAMAGE.
- SEPARATE GROUNDING SYSTEM SHALL BE INSTALLED AND PROPERLY BONDED AS PER CODE AND USAGE REQUIREMENTS.
- ROMEX TYPE WIRING (2 CONDUCTOR WITH GROUND) COPPER MAY BE USED FOR LOCATIONS IN PLACE OF CONDUIT, (UNLESS OTHERWISE SPECIFIED)
- DWELLING UNIT BEDROOMS- ALL BRACH CIRCUITS THAT SUPPLY 125 Volt SINGLE PHASE 15 & 20 AMP OUTLETS INSTALLED IN DWELLING UNIT BEDROOMS SHALL BE PROTECTED BY AN ' ARC-FAULT CIRCUIT INTERRUPTER) BREAKERS. N.E.C. Art. 210-12

ELECTRIC LEGEND

⊖	RECEPTACLE	DUPLEX	
-○-	LIGHT FIXTURE	WALL MOUNT (wm)	TRACK LIGHT
$	SWITCH SINGLE 3- WAY		
	FAN		

NOTE
ELECTRICIAN SHALL TIE INTO EXISTING GENERAL LIGHTING CIRCUITS FOR LIGHT AND RECEPTACLED
CIRCUIT c-1, 1P-15A CB, 3 # 14 ROMEX COPPER WIRING THW
CIRCUIT c-2, 1P-14A CB, 3 # 14 ROMEX COPPER WIRING THW

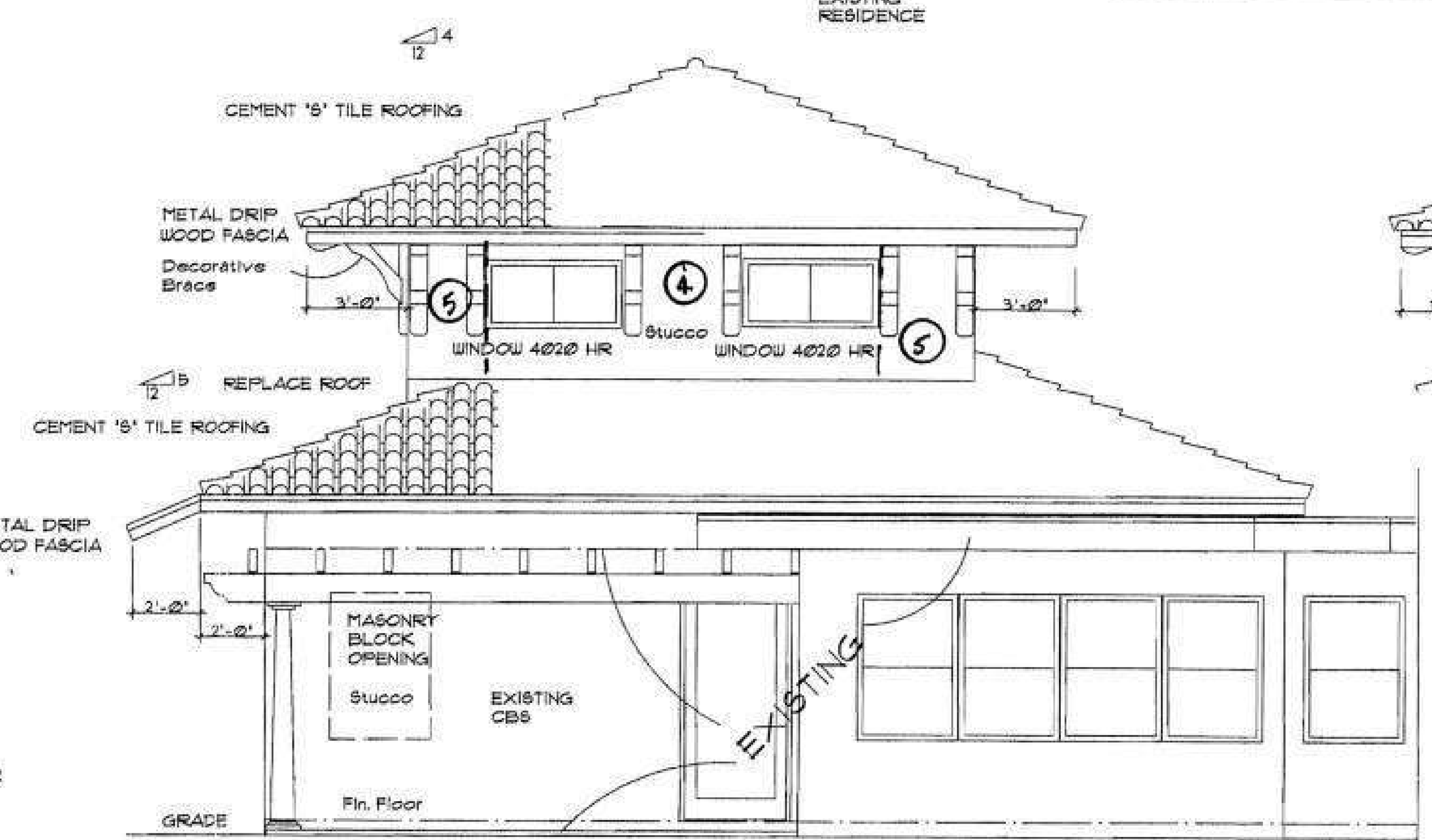

WEST SIDE ELEVATION

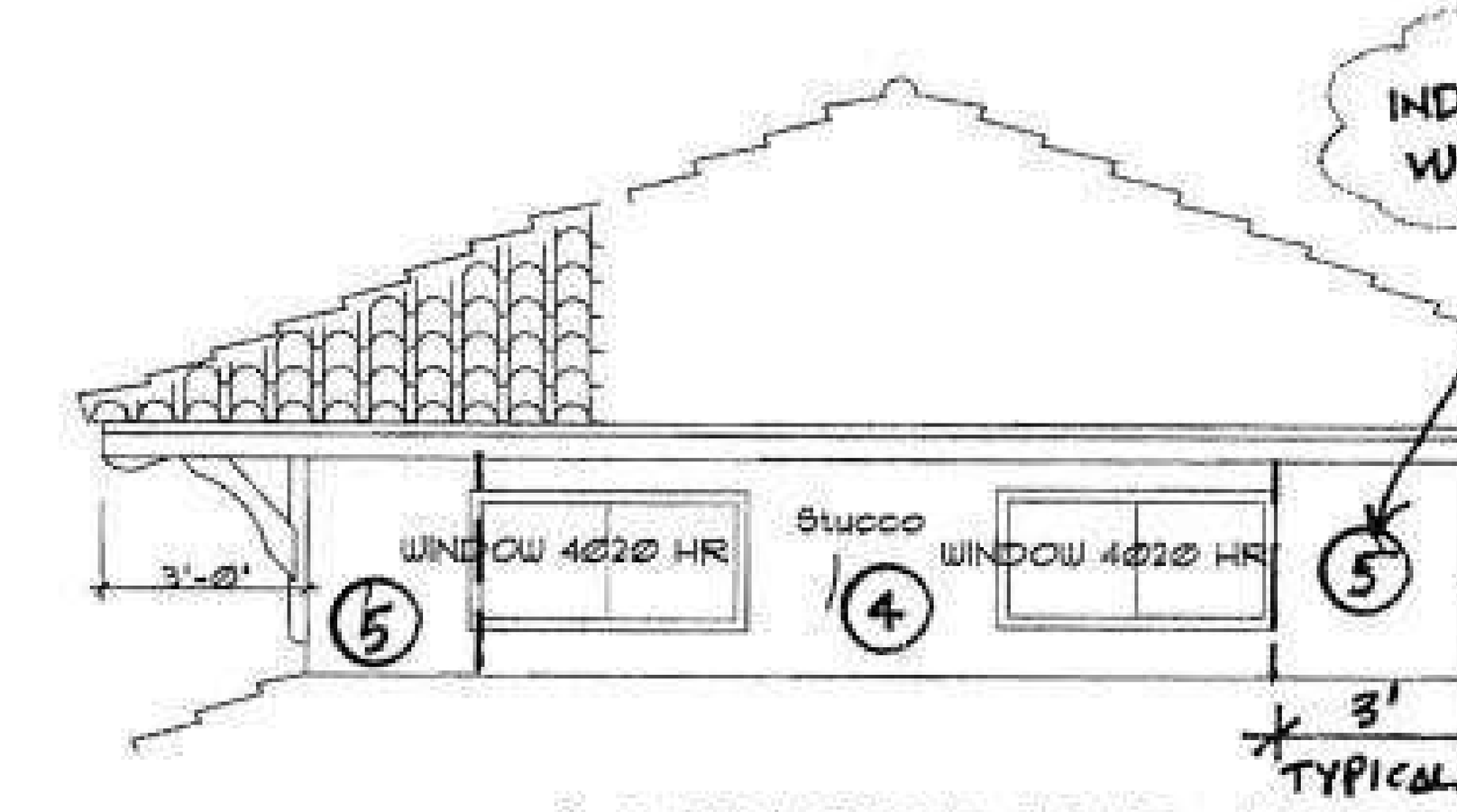

SOUTH SIDE ELEVATION

APPROVED
MAR 26 2009
CITY OF HOLLYWOOD, FLA
PUBLIC UTILITIES - DRAINAGE

APPROVED
MAR 25 2009
STRUCTURAL

APPROVED
MAR 13 2009
OFFICE OF PLANNING

MAY 22 2009

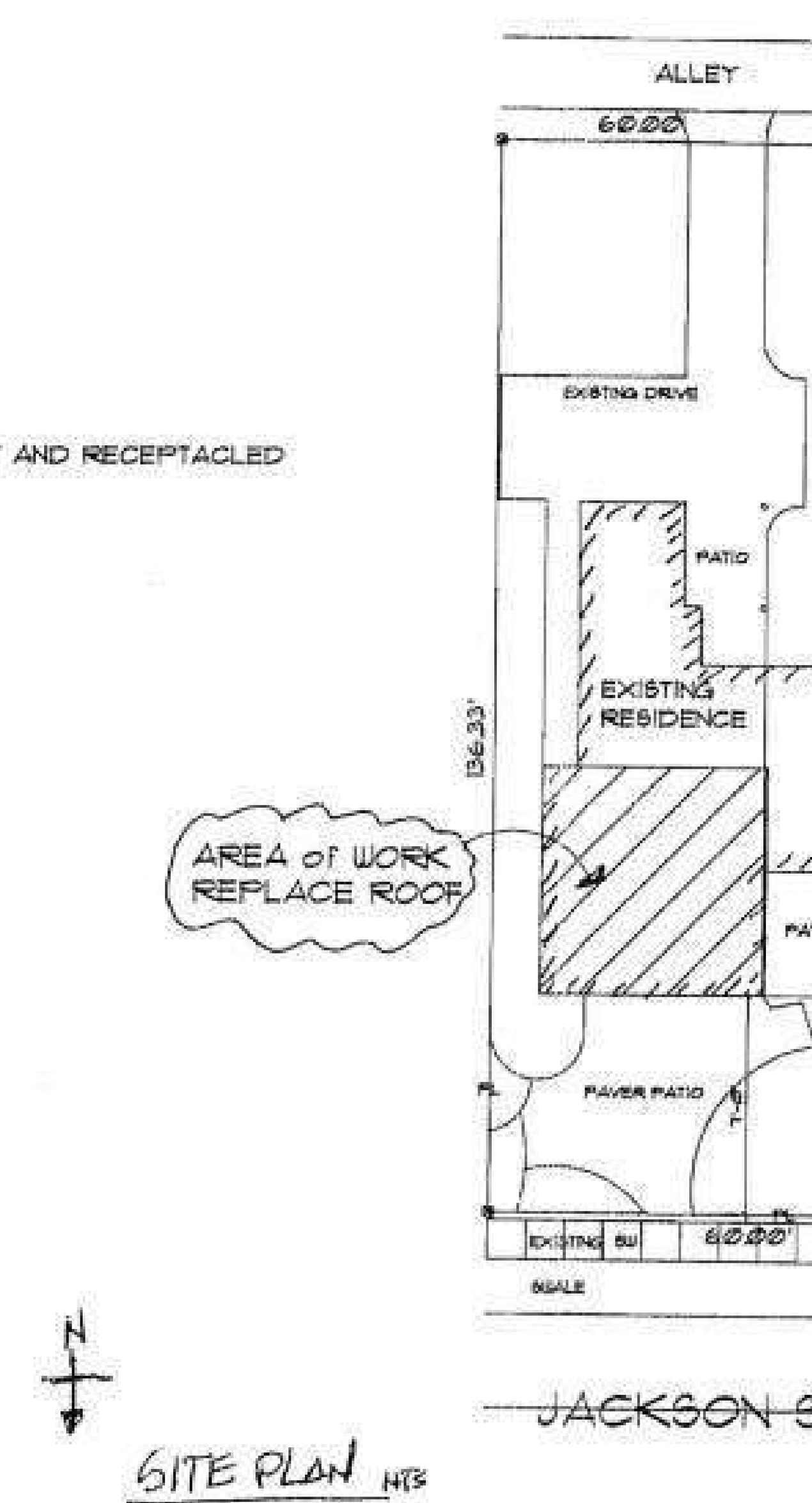

SITE PLAN NTS

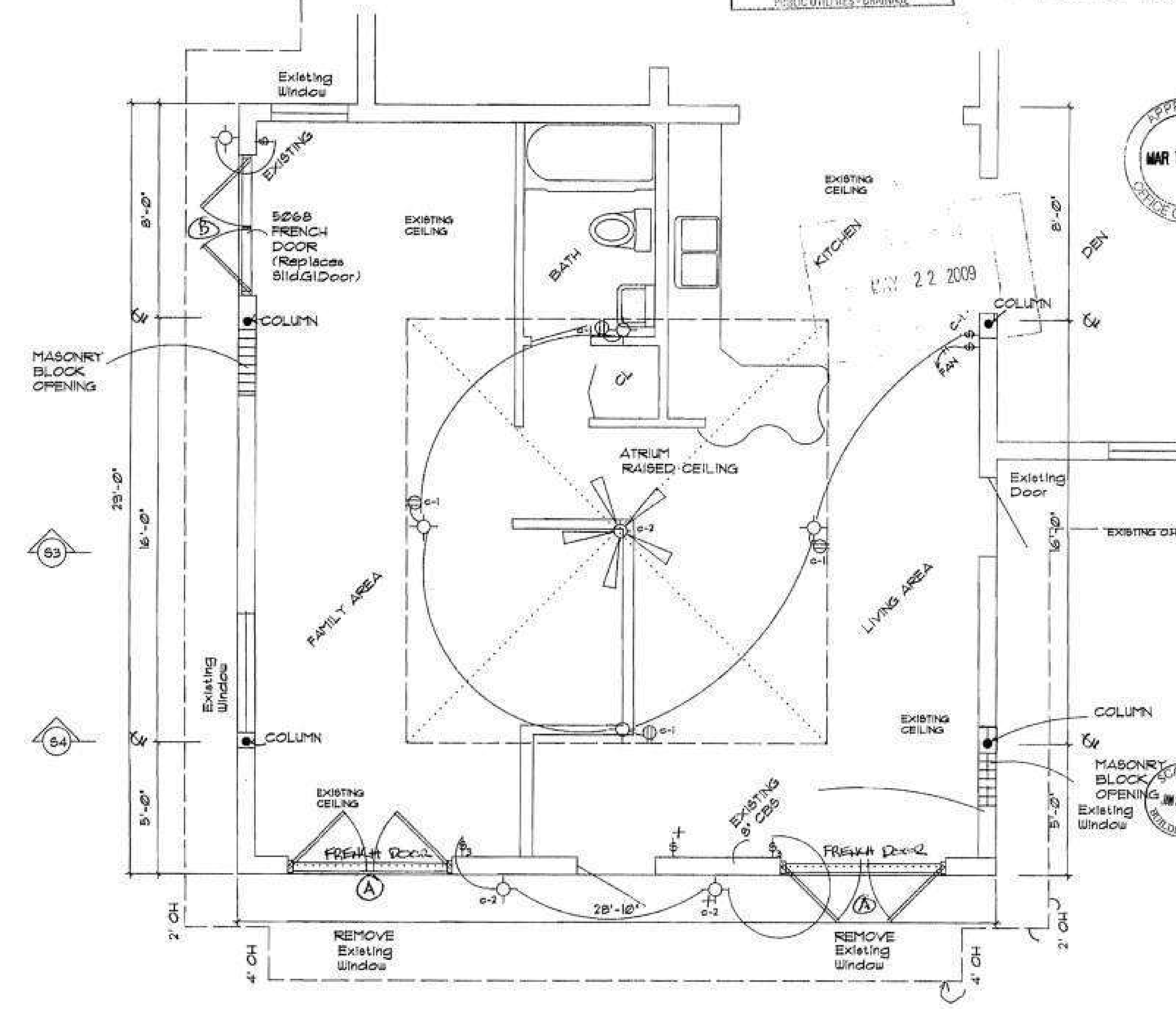

FLOOR PLAN - REPLACED ROOF AREA

SCANNED
BUILDING DIV

Date 1.13.09
Rev 1.27.09
3.9.09

REPLACE EXISTING ROOF STRUCTURE
1404 Jackson Street
Hollywood, Florida

Date 3.9.09
SEAL
ROBERT G. ISHMAN

ROBERT G. ISHMAN P.A.
ARCHITECT
LICENSE AR 12684
2111 HOLLYWOOD BLVD.
HOLLYWOOD, FLORIDA 33020
Tel (954) 929-9695

PROJECT No. 2901
sc 1/4' = 1'- 0'

SHEET
A-1
of 4

THESE DOCUMENTS HAVE BEEN PREPARED ACCORDING TO THE FOLLOWING REQUIREMENTS-
FLORIDA BUILDING CODE 2004 & LATEST EDITION of AMENDMENTS, ASCE 7
140 MPH
CATEGORY 'C'

GENERAL NOTES-

- CONTRACTOR AND SUB CONTRACTORS SHALL VISIT SITE AND VERIFY ALL CONDITIONS BEFORE PROCEEDING WITH ANY COMMENCEMENT OF WORK OR ANY MATERIAL ORDERING. NOTIFY THIS ARCHITECT AND ENGINEERS OF ANY ERRORS, OMISSIONS OR CHANGES BEFORE COMMENCEMENT OF PROJECT.
- MANUFACTURER FOR TRUSSES, STRUCTURAL STEEL FABRICATION SHALL SUBMIT TO THIS ARCHITECT SHOP DRAWINGS FOR APPROVAL BEFORE FABRICATION AND SUBMISSION TO THE BUILDING DEPARTMENT.
- CONTRACTOR SHALL NOTIFY ALL APPROPRIATE UTILITY COMPANIES BEFORE ANY EXCAVATION HAS COMMENCED AND TO VERIFY EXISTING SERVICE LINES AND POSSIBLE HAZARDS.
- INTERIOR PARTITIONS (NON-BEARING) SHALL BE 1/2" GYPSUM WALLBOARD ON EACH SIDE OF 2"x 4" WOOD STUDS or 25 ga METAL 'C' SHAPED STUDS SPACED 24" ON CENTER, UNLESS OTHERWISE SPECIFIED.
- ALL WOOD IN CONTACT WITH CONCRETE SHALL BE TREATED OR OTHERWISE PROTECTED WITH TYPE 30 FELT MEMBRANE BARRIER.

WOOD NOTES

- WOOD GRADE FOR STUDS AND TOP PLATES SHALL BE SOUTHERN PINE - STANDARD GRADE. BASE PLATES SHALL BE No. 2 SOUTHERN PINE TREATED SURFACE DRY USED AT MAX. 19% MOISTURE CONTENT.
- STRUCTURAL GRADE LUMBER SHALL BE MIN. Fb = 1,200 PSI UNLESS OTHERWISE SPECIFIED.
- NAILS FOR-
  STUD TO STUD PLATE - (2) 16d
  STUD TO SOLE PLATE / TOE NAIL- (2) 8d
  DOUBLE TOP PLATE- (2) 16d NAIL @ 12"o.c.
- TOP PLATES IN BEARING WALLS SHALL BE DOUBLED AND LAPPED AT INTERSECTION OF WALLS AND PARTITIONS.
  JOINTS SHALL BE LAPPED NOT LESS THAN (4) FEET
- CORNER OF STUD WALLS SHALL BE FRAMED SOLID BY NOT LESS THAN (3) STUDS WITH 16d NAILS @ 12" o.c. CORNER STUD SECURED TO (3) MEMBER STUDS (2) 16d NAILS @ 6"o.c.
- TOP PLATES IN NON-BEARING PARTITIONS SHALL BE SINGLE
- SOLE PLATES IN NON-BEARING PARTITIONS SECURE TO CONCRETE SLAB WITH TAPCON FASTENER 1/4"x 1-1/2" EMBED or
  HILTI POWDER ACTUATED FASTENER PIN DN 72 P08 x Ø145 SHANK Dia.
  SPACE FASTENERS AT 32"o.c.
- CEILING FURRING STRIPS SHALL BE SOUTHERN PINE 1"x 3" WOOD SECURED TO WOOD JOISTS, TRUSSES SPACED 16"o.c. WITH (2) 8d NAILS COMMON.
- WALL FURRING AND CONTINOUS FIRE STOP FOR CONCRETE, MASONRY WALLS SHALL BE 1"x 2" TREATED PINE SPACED 24"o.c. HORIZONTAL AND MAX. 8ft HIGH VERTICAL
  PROVIDE FORE STOP ABOVE 8ft.
  SECURE TO CONCRETE WITH CUT NAILS OR 'T' NAILS SPACED @ 16"o.c.
- WHERE VERTICAL PIPES POSITIONS NECESSITATE THE CUTTING OF PLATES, A METAL TIE 1"x 1/8" SHALL BE PLACED EACH SIDE OF WOOD PLATE ACROSS THE OPENING 6" PAST AND NAILED WITH (2) 16d od 8d COMMON NAILS AT EACH END.
- HEADERS OR LINTELS OVER STUD WALL OPENINGS SHALL BEAR NOT LESS THAN (3) 2x JACK STUDS or HANGER SECURED TO NOT LESS THAN (3) KING STUDS.
- WHERE STUD WALLS OR PARTITIONS JOIN MASONRY WALLS, SUCH STUDS SHALL BE SECURED AGAINST LATERAL MOVEMENT BY BOLTING TO THE MASONRY OR CONCRETE WITH 1/2 INCH DIAMETER ANCHOR BOLTS WITH OVERSIZED WASHER SPACED NOT MORE THAN 4 FEET APART AND EMBEDDED NOT LESS THAN 5 INCHES INTO A GROUTED CELL OR INTO CONCRETE.

GYPSUM WALLBOARD-

- WALLBOARD SHALL BE ASTM C36-85 REGULAR 1/2" / ASTM C36-85 TYPE 'X' FIRE RATED / ASTM C1177 (MOISTURE RESIISTANT) UNLESS SPECIFIED OTHERWISE.
- JOINT TREATMENT SHALL BE COMPOUND AND TAPE (READY MIX) ASTM C475-88
  CORNER BEAD ASTM C1047-85
  PANEL ADHESIVE SHALL BE STA-STUCK SS-200, ASTM C-557-73
- PROVIDE MIN. 1/2" AIR GAP BETWEEN FLOOR AND WALLBOARD BOTTOM
- ATTACHMENTS FOR WALLBOARD TO SUPPORTS SHALL BE-
  METAL STUDS- TYPE W 1-1/4" DRYWALL SCREWS SPACED @ 12"o.c.
  WOOD STUDS & FURRING- NAILS GWB-54 ANNUAL RING 1/4" HEAD, Ø98 Dia SHANK
  ATTACHMENT SPACING / CEILING- 7" o.c. / WALLS- 8" o.c.

METAL STUD WALL- NON BEARING GALVALUME STEEL

SCREW STUD TRACK- Ø179" BASE STEEL x 3-5/8" WIDE
STUDS- 'C' SHAPED SCREW STUDS, ASTM C645 x .Ø179" BASE STEEL
SCREWS- TYPE S-12 LOW PROFILE (2) SCREWS PER ATTACHMENT (METAL to METAL)
HILTI SHOT THROUGH BASE TRACK TO CONCRETE- PIN DN 19 P08 x .145" Dia. SHANK
CEILING METAL TRACK TO WOOD FURRING- TYPE -W SCREW x 1-1/4" SPACED @ 24"o.c.
METAL FURRING- ASTM C645 / 7/8" x .179" BASE STEEL
WIRE LATH-
- SOFFIT- 3/8" RIB LATH, OVERLAP EDGES ONE (1") ATTACHMENTS FOR SECURING LATH TO SUPPORTS SHALL BE SPACED NOT MORE THAN 6" APART AND SIDE LAPS SHALL BE SECURED TO SUPPORTS AND TIED BETWEEN SUPPORTS AT NOT TO EXCEED 9" INTERVALS. ATTACHMENTS TO CEILING SUPPORTS SHALL BE No. 11 ga x 1" LONG WITH 3/4" Dia. HEAD.
  PROVIDE TYPE 30 ROOF FELT BETWEEN ALL WOOD AND LATH

- STUCCO

- ASTM C926 / (1) PART PORTLAND CEMENT TO A MAX. 2-1/2 PARTS SAND BY VOLUME (MIXED PROPORTION)
- MASONRY APPLICATION- BASE COAT / FINISH COAT
- RIB LATH- (3) COAT APPLICATION / Min. 1/2" THICKNESS
- PLASTIC PC COMPONENTS- PVC ACCESSORIES & PLASTIC LATH

- INSULATION

FIBERGLASS BATT - ATTIC R-30
SINGLE ASSEMBLY R-19
PARTITIONS 4", R-11 / 6" R-19
EXTERIOR WALLS- FRAME 6", R-19
MASONRY R 4.1 MINIMUM
R 5.4 CELOTEX INSULATING SHEATHING 3/4"
CONCRETE SLAB FLOOR R-Ø
FRAME FLOOR R-19

ROOF NOTE

BUILT-UP ROOF

MINERAL SURFACED CAP SHEET (WHITE FLINTLASTIC MODIFIED BITUMEN - HOT MOPPED 12ga x 1-1/4" CORROSION RESISTANT ON TYPE 30, ASTM D226, TYPE II ORGANIC FELT APPLIED TO THE DECK IN SHINGLE FASHION. THE UNDERLAYMENT SHALL BE SECURED TO THE DECK WITH MINIMUM 12 ga x 1-1/4" CORROSION RESTANT ROOFING NAILS AND A MINIMUM 32 ga x 1-5/8" Dia. TIN CAPS SPACED FOR 'PERIMETER' ROOF EDGE (4 ft.) 6" LAPS, 2 ROWS @ 6" MIDSHEET AND 'FIELD' 6" @ LAPS, 2 ROWS @ 12" MIDSHEET.
EDGE METAL SHALL BE .021" (26ga), 2-1/2"x 2-1/2" GALVANIZED AND NAILED OVER THE TOP OF THE UNDERLAYMENT AT 4" ON CENTER WITH MIN. 12ga x 1-1/4" CORROSION RESISTANT ROOFING NAILS AT ALL PERIMETERS, AT CORNERS. THE ENDS OF ADJOINING EDGE METAL SHALL BE OVERLAPPED FOR (5") NOTCHED AND BENT AROUND CORNERS METAL EDGE SHALL BE OVERLAPPED NOT LESS THAN (3").

ROOF SHEATHING- 19/32" CD PLYWOOD - SPAN RATING 40/20
FASTENERS- NAILS (8d) COMMON, SPACED @ (6") ON CENTER OVER ALL SUPPORTS AND BLOCKING UNLESS SPECIFIED OTHERWISE
ROOF SHEATHING NAILED AT (4") ON CENTER AT PERMITER EDGE AND FIELD
PERIMETER EDGE DISTANCE (4 FEET)
ROOF SHEATHING SPACING BETWEEN PANELS AS PER MANUFACTURER REQUIREMENTS. (1/8")
SUPPORTS- MINIMUM (3) TRUSS, JOISTS

ATTIC VENTILATION- 1/ 150 RATIO
1/300 RATIO WITH ROOF VENTILATORS 3ft. ABOVE EAVE

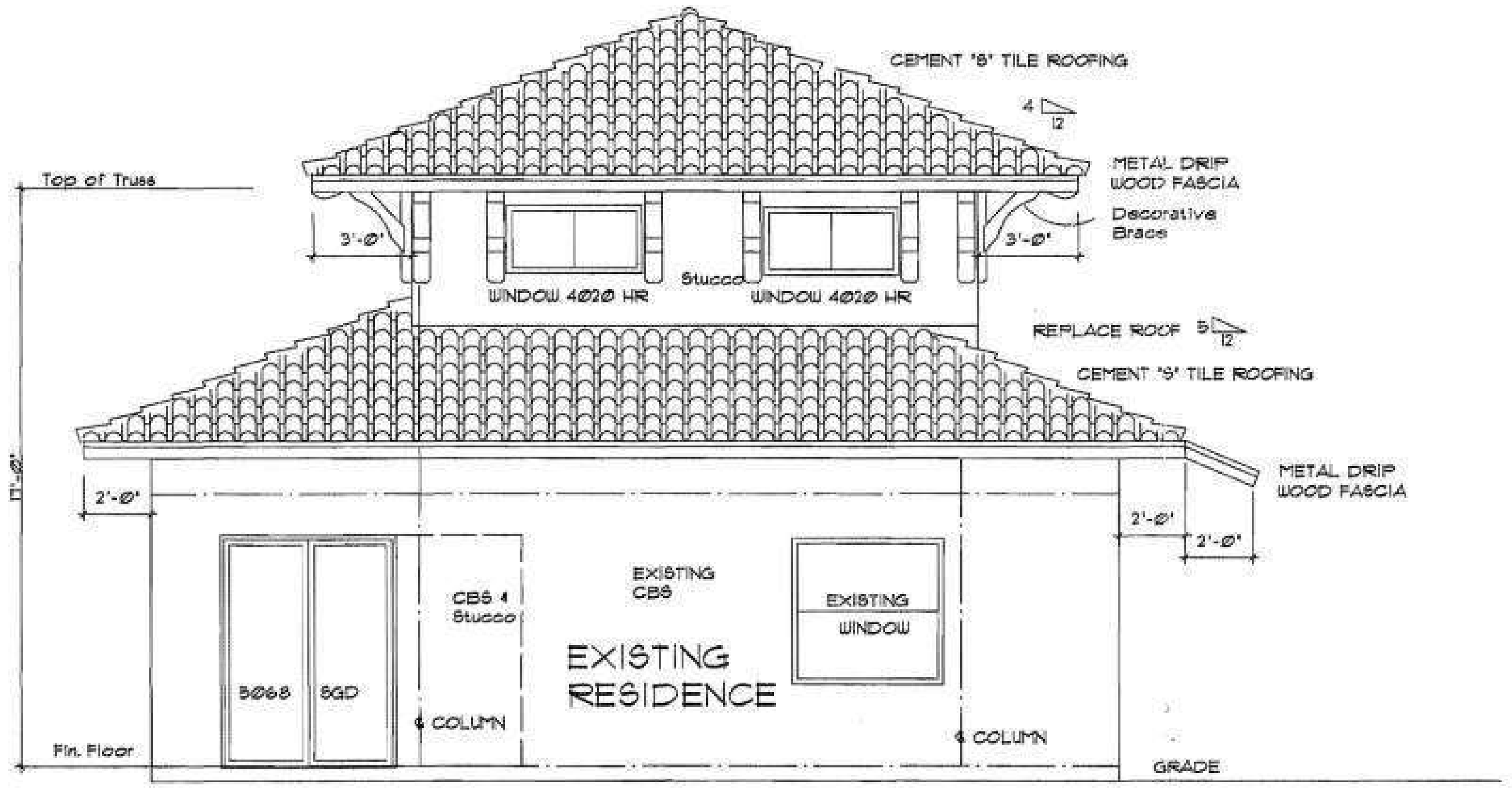

STDE ELEVATION

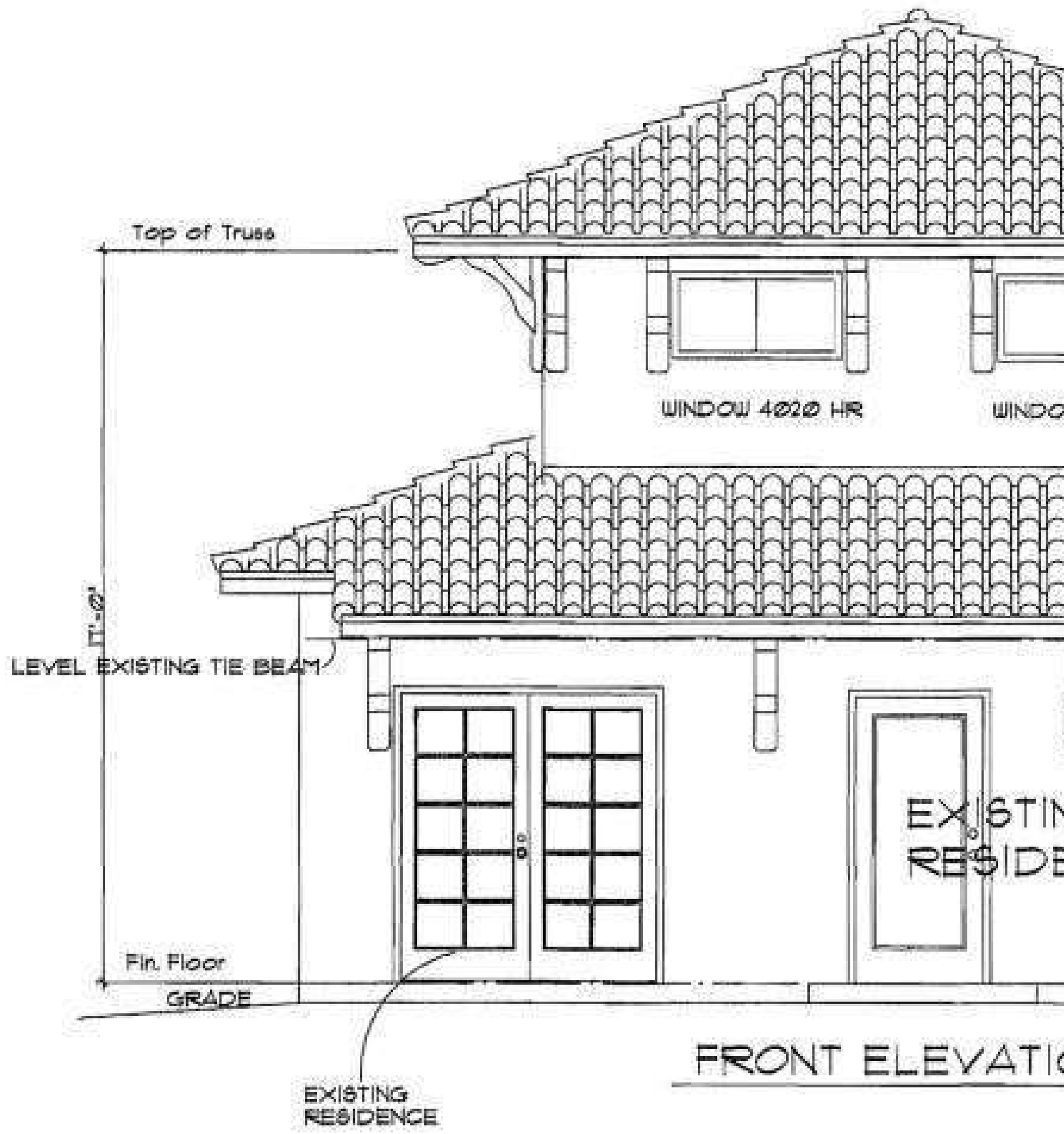

FRONT ELEVATION

FOUNDATION STATEMENT

SEE SOIL ENGINEERS REPORT FOR PILING RECOMMENDATIONS

- A SOIL ENGINEERING TESTING LAB SHALL PROVIDE A REPORT OF EXISTING SOIL CONDITIONS A MAKE RECOMMENDATIONS FOR FOUNDATION REQUIREMENTS FOR THE INTENDED PROJECT.
- MASONRY BLOCK - TYPE S or M MORTOR, 9 GA LADDER REINF. @ 16" o.c. WALL TIES @ 16" @ MASONRY JOINT

ELECTRIC NOTES

- ALL ELECTRIC WORK SHALL BE IN ACCORDANCE WITH THE NATIONAL ELECTRIC CODE.
- MOUNT ALL SWITCHES 42" AFF. AND ALL RECEPTACLES 18" AFF.
  MOUNT WALL HUNG FIXTURES NOT LOWER THAN 80" AFF. TO BOTTOM OF FIXTURE.
- OWNER / CONTRACTOR SHALL SELECT LIGHT FIXTURES TYPE AND SUBMIT TO ARCHITECT FOR APPROVAL FOR LOCATION USAGE.
- ALL EXTERIOR RECEPTACLES (WEATHER PROOF) FOR GENERAL PURPOSE AND BATHROOM / RESTROOM SHALL HAVE GROUND FAULT CIRCUIT INTERRUPTER.
- SMOKE DETECTORS SHALL BE 110 Volt WITH BATTERY BACK UP TYPE, INTERCONNECTED HARDWIRED TO NON SWITCHABLE INDIVIDUAL CIRCUIT. LOCATE ON OR NEAR CEILING IN THE IMMEDIATE VICINITY OUTSIDE AND INSIDE BEDROOMS AT DOORWAY AND AT STAIRWAY LANDINGS. LOCATE NO CLOSER THAN 3 Feet TO A/C DIFFUSER GRILL.
- THE ELECTRICAL CONTRACTOR SHALL NOTIFY ARCHITECT OF ANY CHANGES TO EQUIPMENT LOADS DIFFERENT THAN SCHEDULE PANEL LOADS.
- GROUNDING ELECTRODES SHALL BE COPPER THW IN ON CONTINOUS LENGTH OR SPLICES IN BUSBARS SHALL BE PERMITTED AND SHALL BE ENCLOSED IN CONDUIT ENCLOSURE SECURELY FASTENED TO THE SURFACE ON WHICH IT IS CARRIED TO EXPOSED CONNECTIONS FOR GROUNDING. METHODS FOR SECURING GROUND SHALL BE PERMANENT. PROVIDE GROUNDING ELECTRODES FROM ALL SERVICE EQUIPMENT OR SEPERATLEY DERIVED SYSTEM TO WATER PIPE OR STRUCTURAL METAL BUILDING MEMBER AND FROM THAT POINT TO ONE OF THE ELECTRODES SHOWN FOR GROUNDING.
- BONDING SHALL BE PROVIDED WHERE NECESSARY TO ASSURE ELECTRICAL CONTINUITY AND THE CAPACITY TO CONDUCT SAFELY ANF FAULT CURRENT LIKELY TO BE IMPOSED. ALL NON-CURRENT CARRYING METAL PARTS OF SERVICE EQUIPMENT SHALL BE EFFECTIVELY BONDED TOGETHER.
  AN ACCESSIBLE MEANS EXTERNAL TO ENCLOSURES FOR CONNECTING INTER-SYSTEM BONDING AND GROUNDING CONDUCTORS SHALL BE PROVIDED AT THE SERVICE BY EITHER EXPOSED METALLIC SERVICE RACEWAYS, EXPOSED GROUNDING ELECTRODES CONDUCTOR OR APPROVED MEANS FOR THE EXTERNAL CONNECTION OF A BONDING, OR GROUNDING CONDUCTOR TO THE SERVICE RACEWAY OR EQUIPMENT.
  METHODS OF BONDING SHALL BE BY SCREWS, CLIPS, THREADED COUPLING AND CONNECTORS, BONDING JUMPERS OR OTHER DEVICES SUCH AS BONDING TYPE LOCKNUTS AND BUSHINGS.
- TESTING- ALL WIRING SHALL BE FREE FROM SHORT CIRCUITS AND GROUNDS AND SHALL BE TESTED FOR THESE DEFECTS PRIOR TO BEING CONNECTED TO THE CIRCUITS.
- GROUNDING CONDUCTOR MATERIAL TYPE AND SIZE AS PER PANEL SCHEDULE AND RISER. PROTECTION OF CONDUCTORS SHALL BE BY CONDUIT, BOXES AND COVERS STUD PLATES AND SLEEVES, RACEWAY ETC.TO INSURE ADEQUATE PROTECTION OF CONDUCTORS AGAINST DAMAGE.
- SEPARATE GROUNDING SYSTEM SHALL BE INSTALLED AND PROPERLY BONDED AS PER CODE AND USAGE REQUIREMENTS.
- ROMEX TYPE WIRING (2 CONDUCTOR WITH GROUND) COPPER MAY BE USED FOR LOCATIONS IN PLACE OF CONDUIT, (UNLESS OTHERWISE SPECIFIED)
- DWELLING UNIT BEDROOMS- ALL BRACH CIRCUITS THAT SUPPLY 125 Volt SINGLE PHASE 15 & 20 AMP OUTLETS INSTALLED IN DWELLING UNIT BEDROOMS SHALL BE PROTECTED BY AN ' ARC-FAULT CIRCUIT INTERRUPTER) BREAKERS. N.E.C. Art 210-12

ELECTRIC LEGEND

⊖	RECEPTACLE	DUPLEX	
-◇-	LIGHT FIXTURE	WALL MOUNT (wm)	TRACK LIGHT
$ / $3	SWITCH SINGLE / 3- WAY		
(fan symbol)	FAN		

NOTE
ELECTRICIAN SHALL TIE INTO EXISTING GENERAL LIGHTING CIRCUITS FOR LIGHT AND RECEPTACLED
CIRCUIT c-1, 1P-15A CB, 3 # 14 ROMEX COPPER WIRING THW
CIRCUIT c-2, 1P-14A CB, 3 # 14 ROMEX COPPER WIRING THW

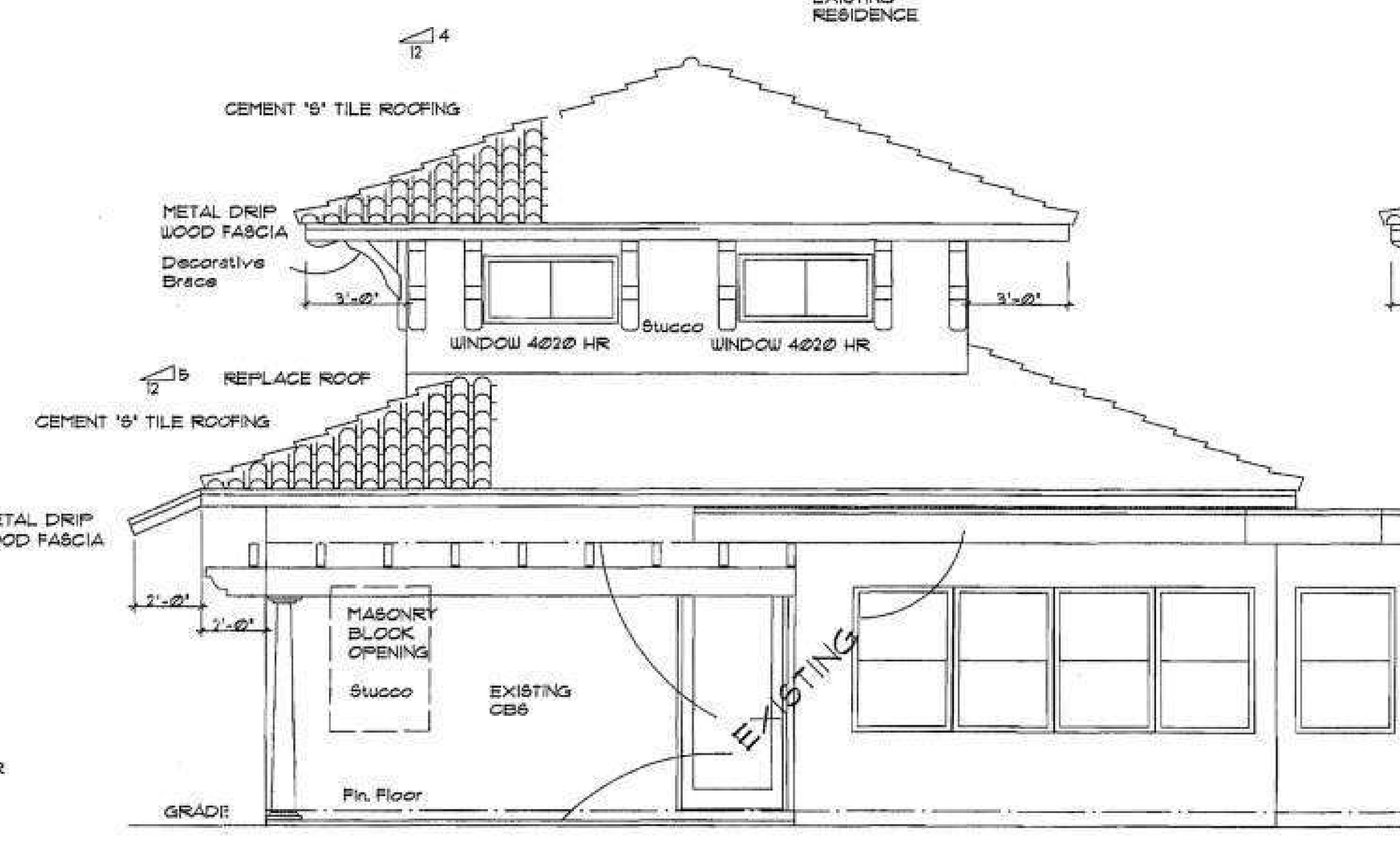

WEST SIDE ELEVATION

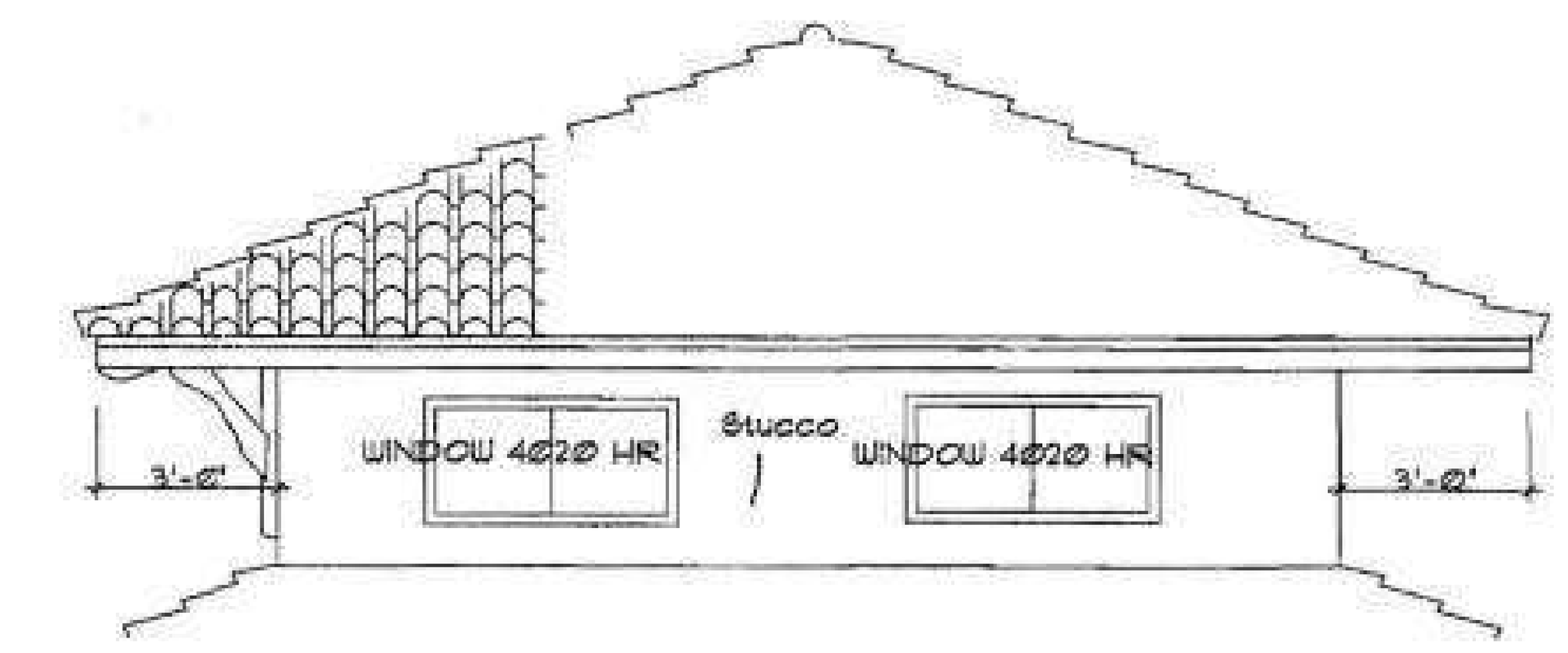

SOUTH SIDE ELEVATION

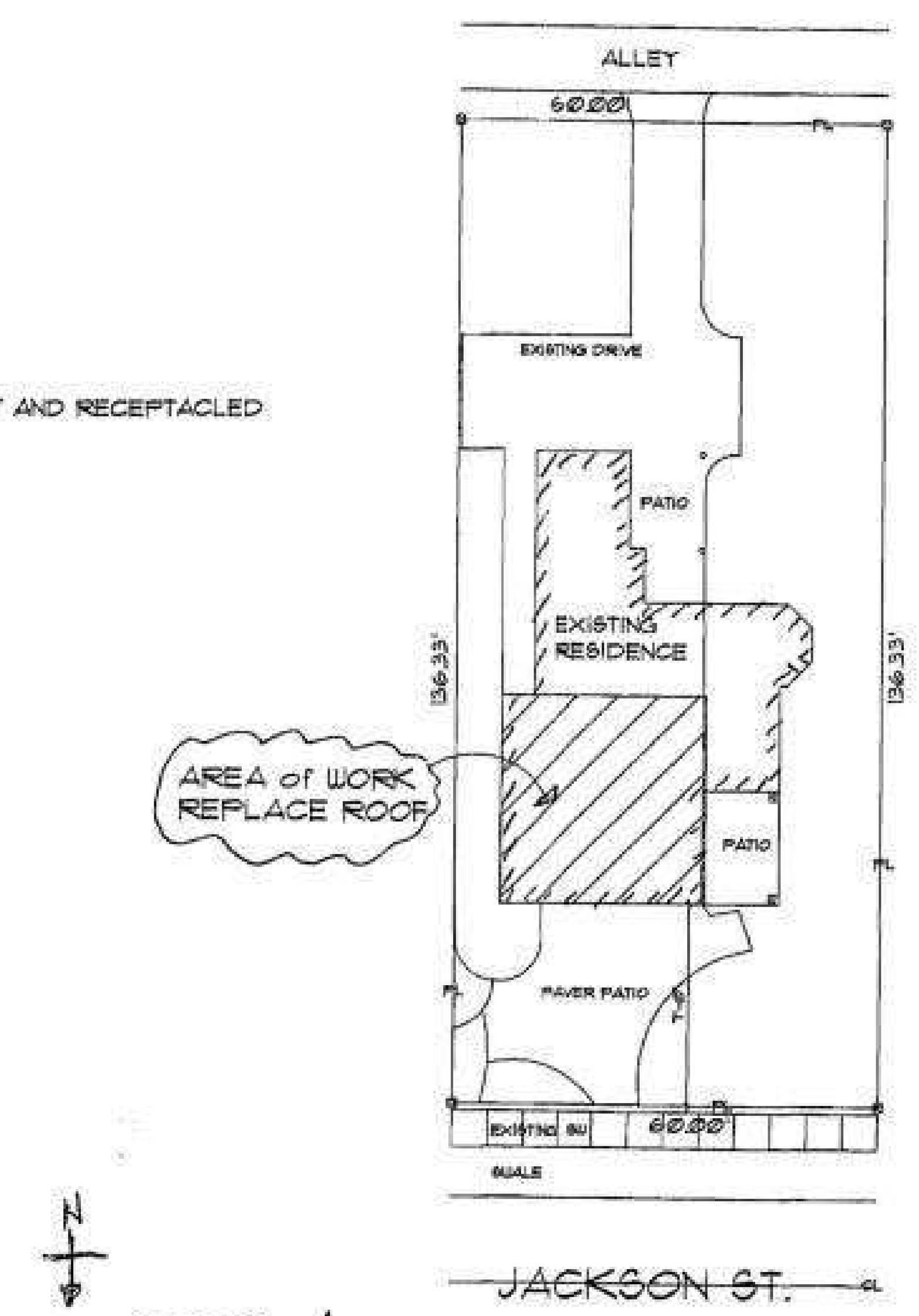

SITE PLAN NTS

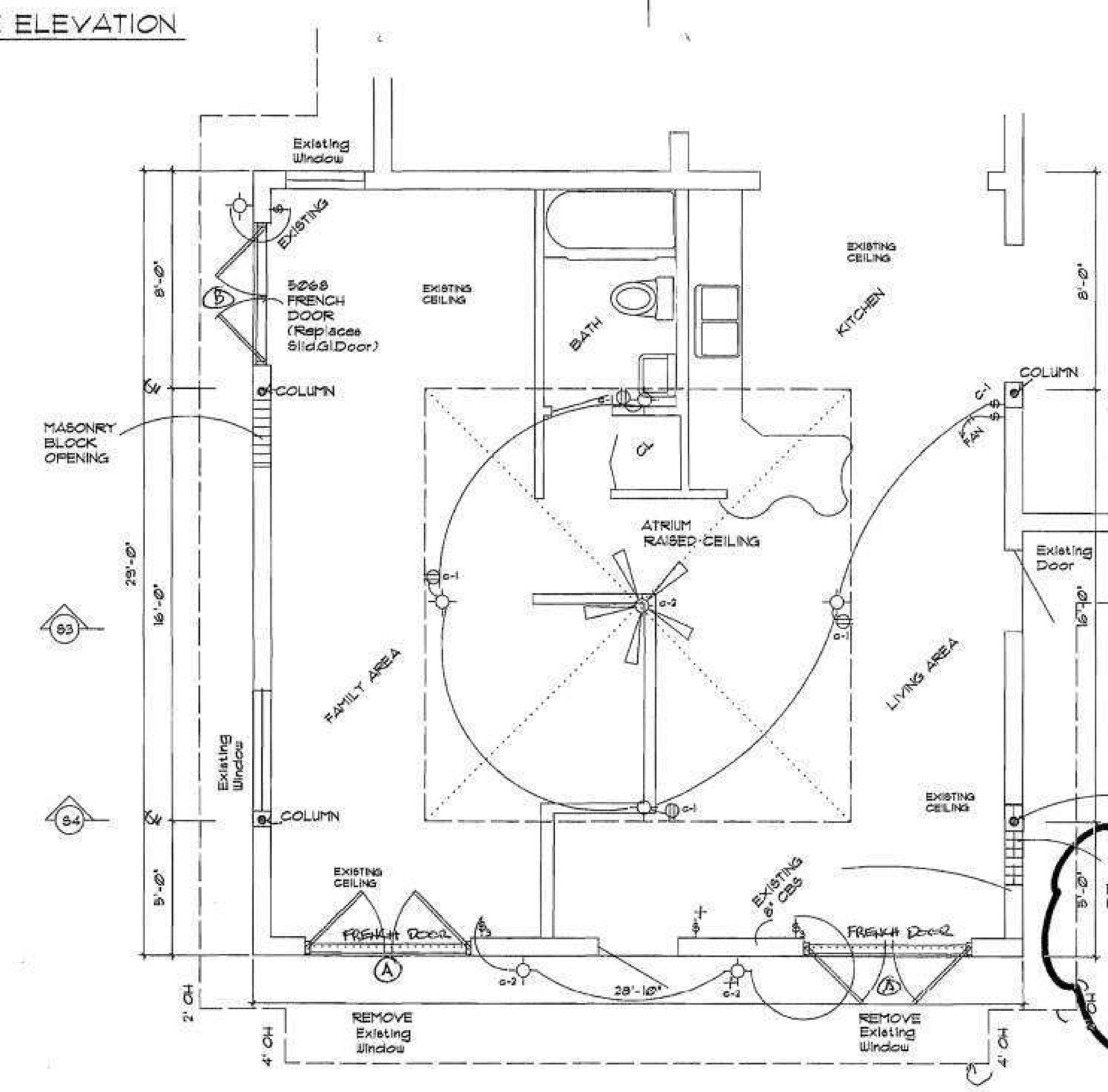

FLOOR PLAN - REPLACED ROOF AREA

Date 1/15/09
Rev 1-27-09

REPLACE EXISTING ROOF STRUCTURE
1404 Jackson Street
Hollywood, Florida

Date 1/26/09
ROBERT G. ISHMAN

ROBERT G. ISHMAN P.A.
ARCHITECT
LICENSE AR 12684
2117 HOLLYWOOD BLVD.
HOLLYWOOD, FLORIDA 33020
Tel (954) 929-3695

VOID STREET ONLY

APPROVED
FEB - 2 2009

SCANNED JAN 27 2011 BUILDING DIV.

PROJECT No. 2301
sc 1/4" = 1'- 0"
SHEET
A-1
of 4

PGT Manufacturer or Equivalent
Series SWD-101 Aluminum French Door- Impact
Series fd-101 Aluminum French Door w/Sidelites- Impact
" DETAILS"

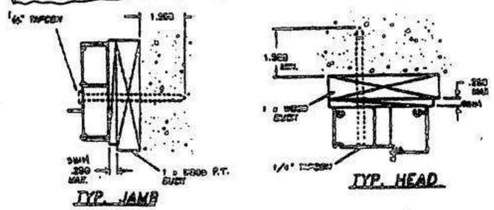

TYP. JAMB

TYP. HEAD

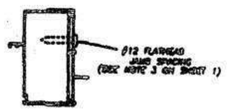

TYP. JAMB/SIDELITE

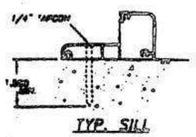

TYP. SILL

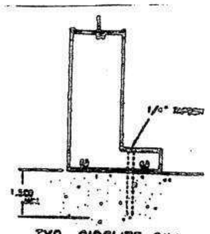

TYP. SIDELITE SILL

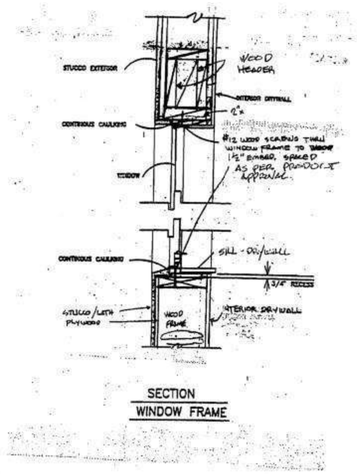

SECTION
WINDOW FRAME

ROOM FINISH SCHEDULE

AREA	FLOOR	BASE	WALLS	CEILING	CEILING HEIGHT	REMARKS
EXISTING HOUSE	EXISTING	EXISTING	PAINT **	(KD) PAINT ^	9'-0"	
ATRIUM	EXISTING	EXISTING	PAINT **	(KD) PAINT ^	17'-0"	

NOTES-
** EGG SHELL LATEX PAINT
^ LATEX PAINT
(KD) CEILING - KNOCK DOWN LIGHT TEXTURE

○ SCHEDULE / WINDOW

MARK	TYPE	FRAME	GLAZING	SILL	BUCK OPENING	REMARKS	WIND PRESSURE pos P.S.F neg	IMPACT RESISTANT	PRODUCT APPROVAL
1	4Ø2Ø HR HORIZ. ROLLING	ALUMINUM	TINTED	DRYWALL	41-1/2"x 23-1/2"		+ 45.6 — 49.5	YES	

WINDOWS SHALL BE WHITE E.S.P. FRAME FINISH AND GREY TINT IMPACT GLAZING
ALL WINDOW FRAMES, SASHES SHALL BE EXTRUDED ALUMINUM 6063-T5 ALLOY
CONTRACTOR SHALL VERIFY ALL BUCK OPENINGS AND INSTALLATION REQUIREMENTS WITH PRODUCT APPROVAL

⬡ SCHEDULE / DOOR

MARK	SIZE	TYPE	DOOR MATERIAL	FRAME	THRESHOLD	BUCK OPENING	REMARKS	WIND PRESSURE pos P.S.F neg	IMPACT RESISTANT	PRODUCT APPROVAL
A	6'Ø"x 6'8"	FRENCH DOOR (1) LITE	IMPACT GLASS ALUMINUM	ALUMINUM	ALUMINUM	72 1/2"x 8Ø"		+ 45.6 — 49.5		
B	5'Ø"x 6'8"	FRENCH DOOR (1) LITE	IMPACT GLASS ALUMINUM	ALUMINUM	ALUMINUM	6Ø 1/2" x 8Ø"		+ 45.6 — 49.5		

NOTE-
DOOR SHALL BE WHITE E.S.P. FRAME FINISH AND GREY TINT IMPACT GLAZING. DOOR HARDWARE SHALL BE OWNER SELECTED
CONTRACTOR SHALL VERIFY ALL BUCK OPENINGS AND INSTALLATION REQUIREMENTS WITH PRODUCT APPROVAL

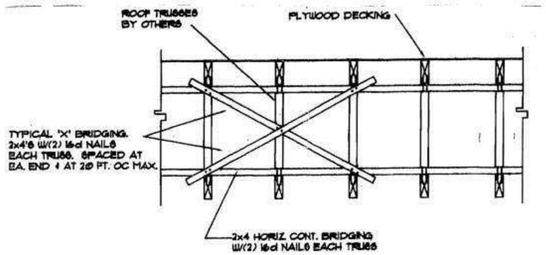

TYPICAL 'X' BRIDGING

G.D. Klieger, Inc. - Consulting Structural Engineers
1909 Harrison St., Ste 204, Hollywood, FL 33020
P: 954-923-2111 F: 954-923-4949
Gershon D. Klieger, PE FL. PE#36109 K9006

TRUSS TO WALL CONNECTION (FOR COMBINED UPLIFT + HORIZONTAL REACTIONS:
PROJECT: ROOF REPLACEMENT
1404 JACKSON ST., HOLLYWOOD, FL 01/23/2009

					CAPACITY PROVIDED	MAX C&C	CALC. MFWR	54 Edition USP CAT. PAGE #:
1	"USP" *UPLIFT*	RT20T	(7)-16d NAILS TO TRUSS (4) 3/16" Diam. TAPCONS TO CONC>	Uplift=	1,225	550	240	85
2	"USP" *LATERAL*	JA3	(4)-10d x 1-1/2" NAILS EA. LEG	Lateral= (F1)	610	500	240	72
3	SEE DETAIL A-3, S-2			Uplift=	11,150	9,900	5,950	
4	"SIMPSON"	VTC2 @48" O.C. MAX.	(4)-10d NAILS - TRUSS (5)-10dx 1-1/2 NAILS - VALLEY TRUSS	Uplift=	405	300	190	145 SIMPSON (2006)
				*** AT ALL PIGGY-BACK TRUSS CONN'S.				

SEE PLAN AND SECTION DETAILS FOR ALL OTHER CONNECTORS NOT SPECIFIED HEREIN.

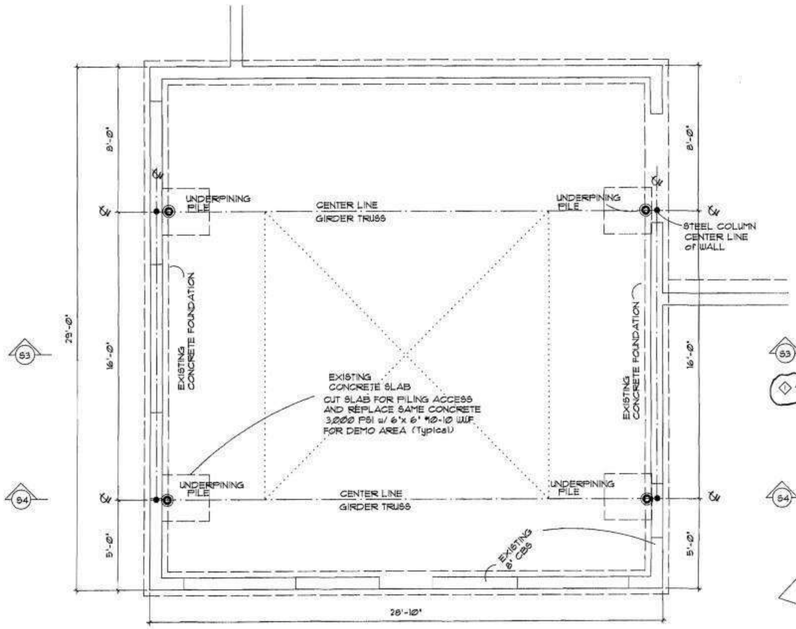

FOUNDATION PLAN

PILE NOTE

PILING DESIGN FOR 9,000 lb COMPRESSION LOAD for FOUNDATION UNDERPINING
SEE SOIL ENGINEERS REPORT
PREFERED 3"ø HELICAL PILE CAPACITY (8) Ton COMPRESSION

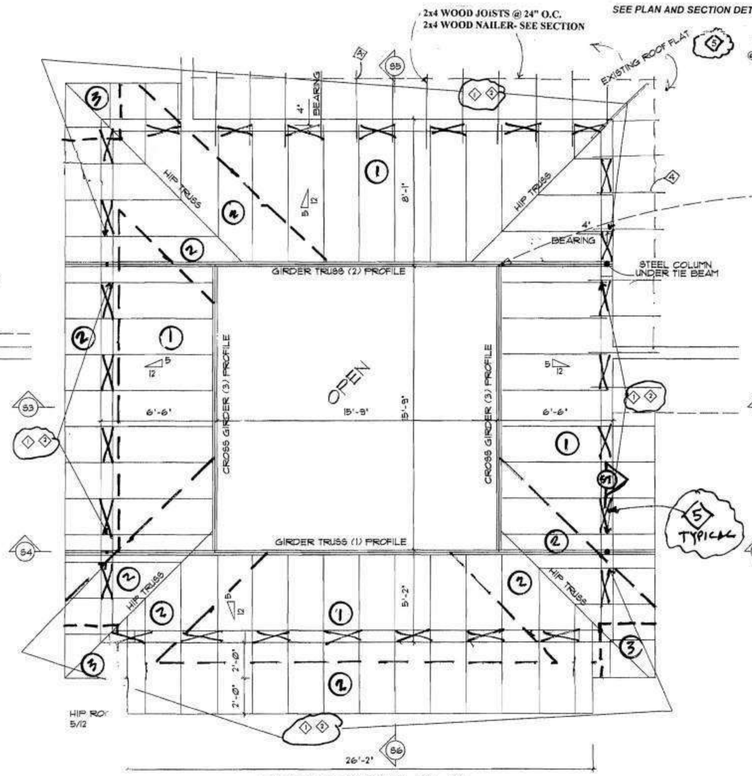

ROOF FRAMING PLAN
LEVEL EXISTING TIE BEAM

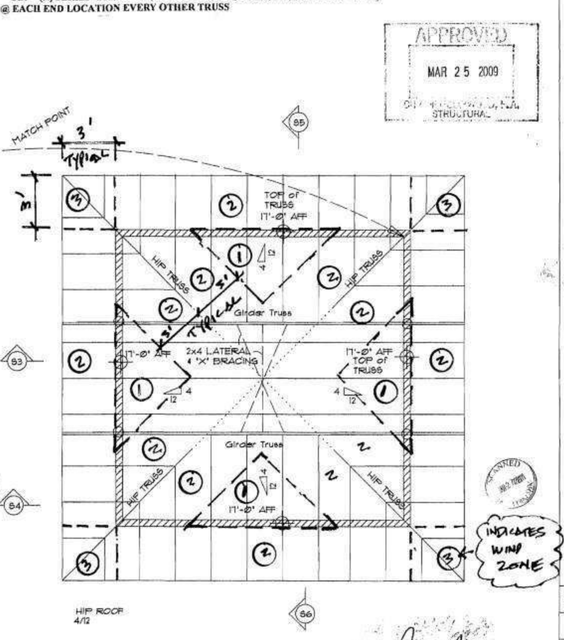

ROOF FRAMING PLAN
LEVEL 17' AFF

ALL HIGH ROOF TRUSS CONNECTIONS BY TRUSS DESIGNER SEE TRUSS SHOP DRAWINGS

INDICATES WIND ZONE

APPROVED
MAR 25 2009
STRUCTURAL

MAR 9 2009
GD KLIEGER, INC.
1909 HARRISON ST., #204
HOLLYWOOD, FL 33020
☎ 954-923-2111
Fax 954-923-4949
EB 4621

Date 1-27-09
Rev 3-9-09

REPLACE EXISTING ROOF STRUCTURE
1404 Jackson Street
Hollywood, Florida

ROBERT G. ISHMAN

ROBERT G. ISHMAN P.A.
ARCHITECT
LICENSE AR 12684
2171 HOLLYWOOD BLVD.
HOLLYWOOD, FL 33020
Tel: (954) 923-9595

PROJECT No. 2801
sc 1/4" = 1'- Ø"

SHEET
A-2
of 4

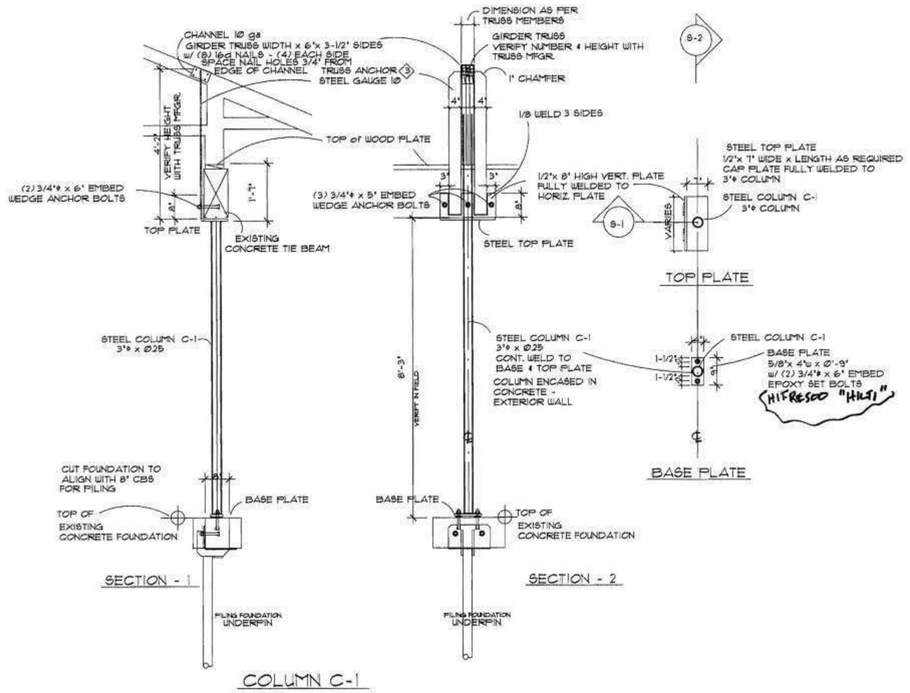

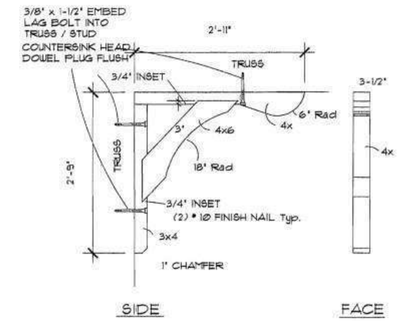

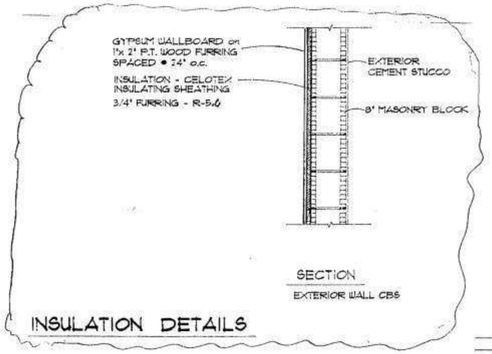

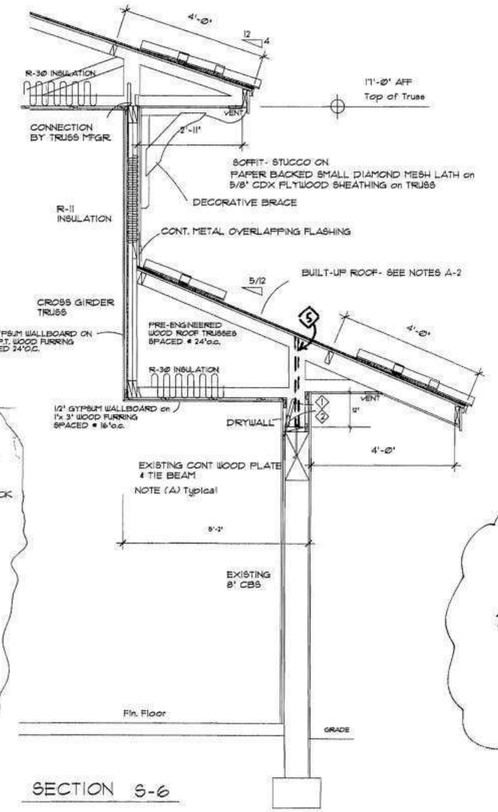

METAL DRIP EDGE
1x2' P.T. WOOD SPACER
1x WOOD FASCIA
2x6 WOOD SUB-FASCIA
WIRE LATH & STUCCO SOFFIT
CONT. 3" SCREEN VENT

SOFFIT - STUCCO ON PAPER BACKED SMALL DIAMOND MESH LATH on 5/8" CDX PLYWOOD SHEATHING on WOOD FURRING

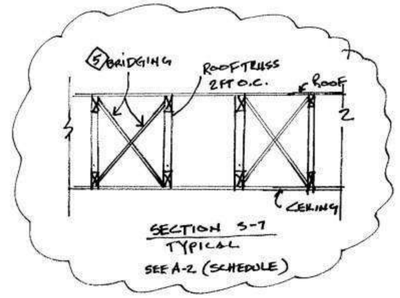

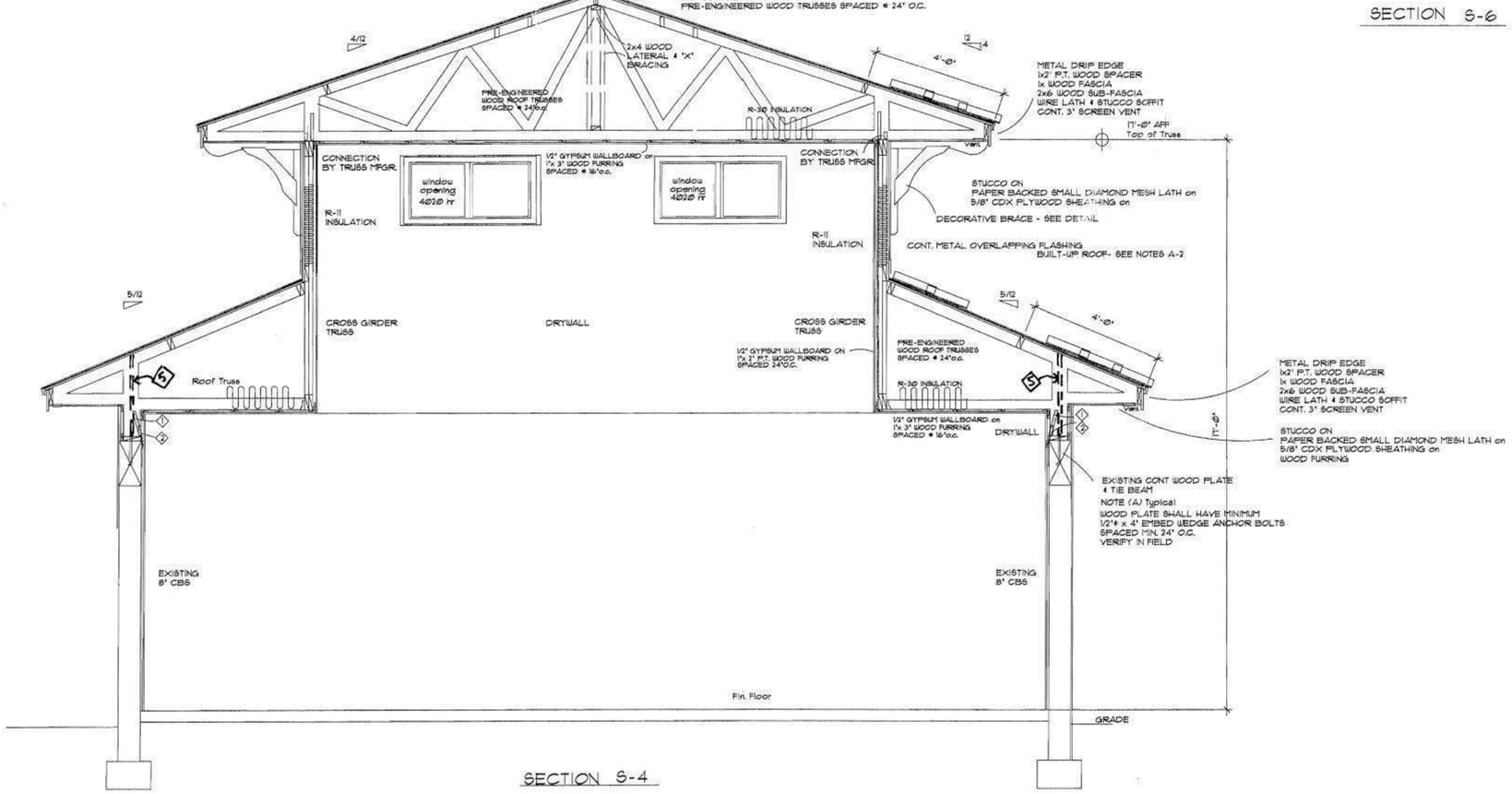

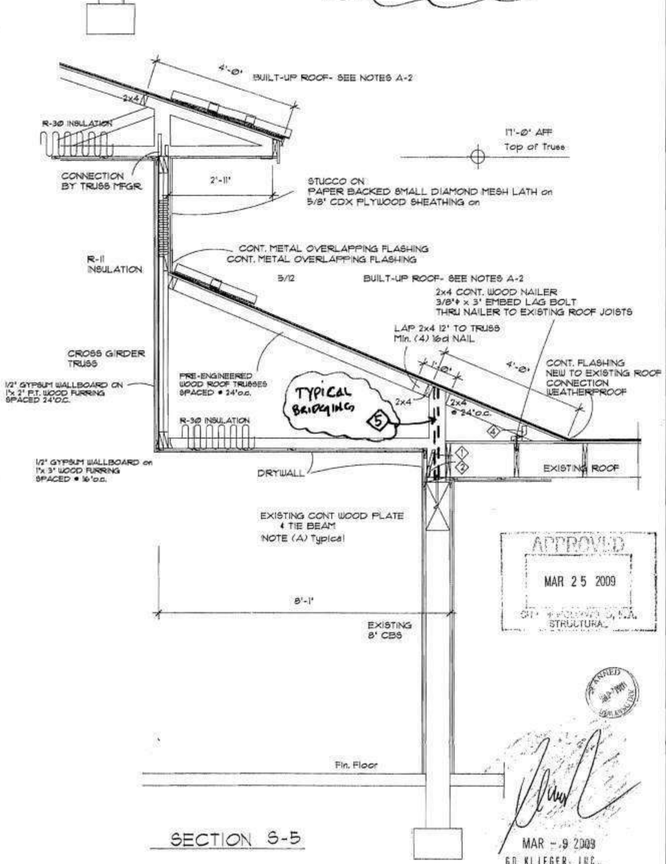

APPROVED
MAR 25 2009
CITY OF HOLLYWOOD, FLA.
STRUCTURAL

MAR - 9 2009
GD KLIEGER, INC.
1303 HARRISON ST. #201
HOLLYWOOD, FL 33020
☎ 954-922-2116
Fax 954-922-6069
EB 6021

Date 12/09
Rev 3-9-09

REPLACE EXISTING ROOF STRUCTURE
1404 Jackson Street
Hollywood, Florida

Pete 3709

ROBERT G. ISHMAN

ROBERT G. ISHMAN P.A.
ARCHITECT
LICENSE AR 12684
2171 HOLLYWOOD BLVD.
HOLLYWOOD, FLORIDA 33020
TEL (954) 925-9699

PROJECT No. 2801

SCALE 1/2"=1'- 0"

SHEET
A-3
of 4

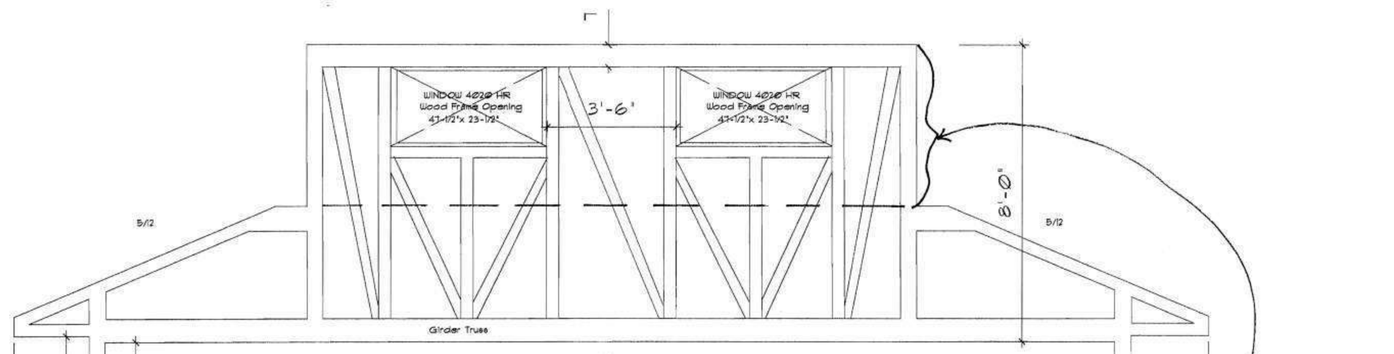

GIRDER TRUSS (1) PROFILE

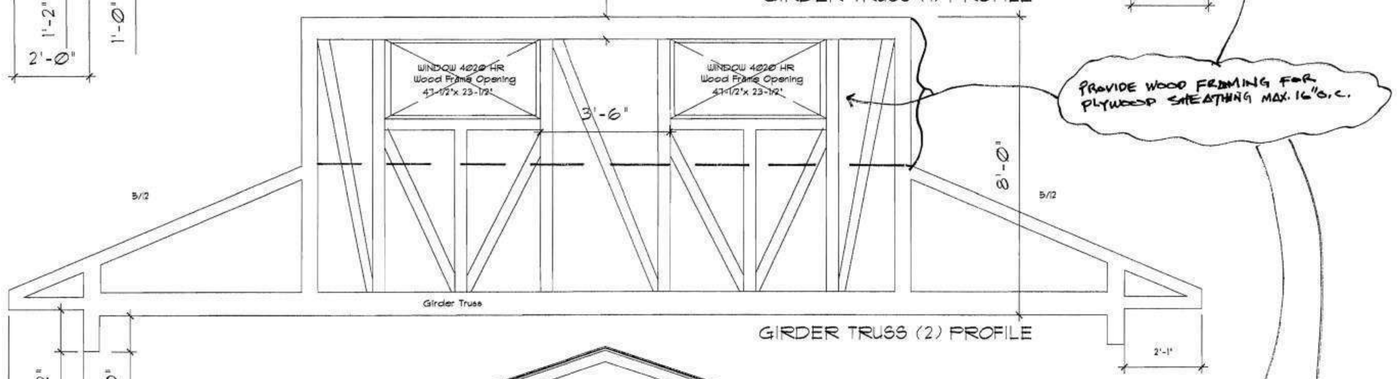

GIRDER TRUSS (2) PROFILE

PROVIDE WOOD FRAMING FOR PLYWOOD SHEATHING MAX. 16"O.C.

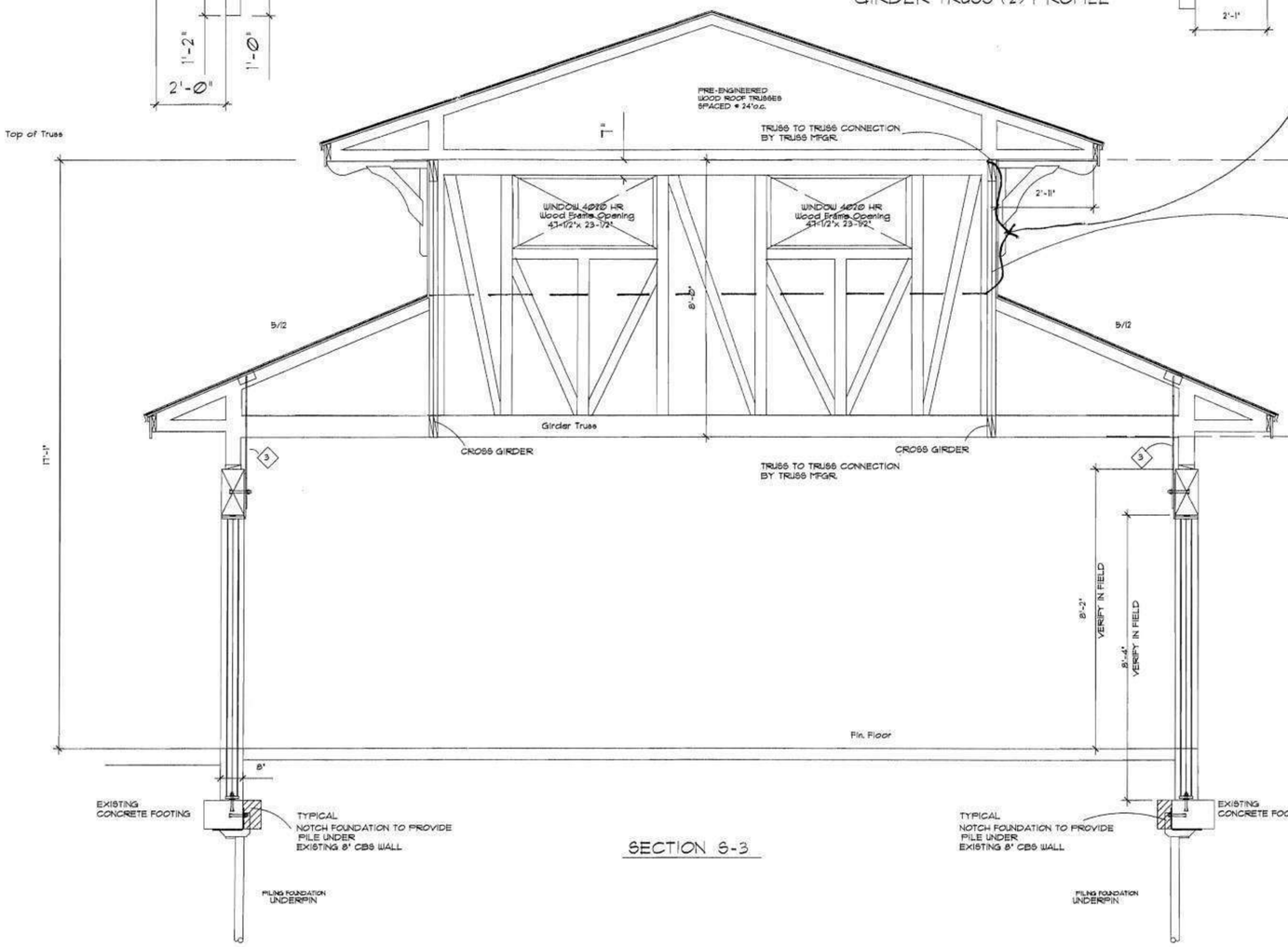

SECTION S-3

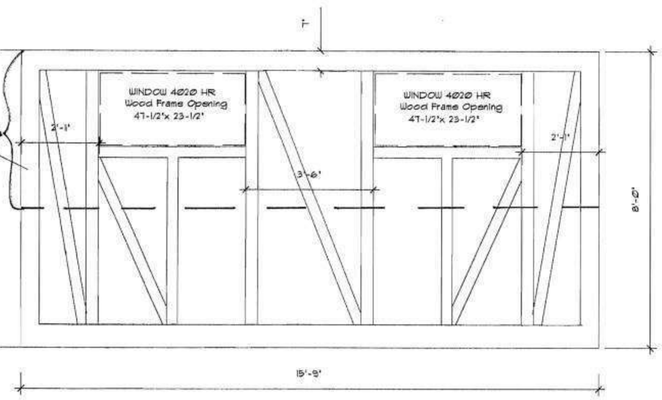

CROSS GIRDER (3) PROFILE

Date 1.27.09
Rev 3.9.09

REPLACE EXISTING ROOF STRUCTURE
1404 Jackson Street
Hollywood, Florida

Date 3.9.09

ROBERT G. ISHMAN

ROBERT G. ISHMAN P.A.
ARCHITECT
LICENSE AR 12684
1701 HOLLYWOOD BLVD.
HOLLYWOOD, FLORIDA 33020
Tel (954) 923-9655

APPROVED
MAR 25 2009
STRUCTURAL

SCANNED
JAN 27 2011

MAR - 9 2009
GD. KLIEGER, INC.
1909 HARRISON ST. #204
HOLLYWOOD, FL 33020
954-923-2111
Fax 954-923-4849
EB 4521

PROJECT No. 2901

SCALE 1/2"=1'-0"

SHEET
A-4
of 4

TRUSS PROFILES

Date
Rev 3.9.09

GENERAL:

1. THE DRAWINGS ARE INTENDED TO SHOW THE GENERAL ARRANGEMENT, DESIGN AND EXTENT OF THE WORK AND ARE PARTIALLY DIAGRAMMATIC. THEY ARE NOT INTENDED TO BE SCALED FOR ROUGH-IN MEASUREMENTS, OR TO SERVE AS SHOP DRAWINGS OR PORTIONS THEREOF.
2. ALL DETAILS AND SECTIONS SHOWN ON THE DRAWINGS ARE INTENDED TO BE TYPICAL AND SHALL BE CONSTRUED TO APPLY TO ANY SIMILAR SITUATION ELSEWHERE ON THE PROJECT, EXCEPT WHERE A DIFFERENT DETAIL OR SECTION IS SHOWN.
3. PRIOR TO START OF CONSTRUCTION, THE CONTRACTOR AND ALL THE SUB-CONTRACTORS SHALL VERIFY ALL GRADES, LINES, LEVELS, DIMENSIONS AND COORDINATE EXISTING CONDITIONS AT THE JOB SITE WITH THE PLANS AND SPECIFICATIONS. THEY SHALL REPORT ANY INCONSISTENCIES OR ERRORS IN THE ABOVE TO THE ARCHITECT/ENGINEER BEFORE COMMENCING WORK. THE CONTRACTOR AND HIS SUBCONTRACTORS SHALL LAY OUT THEIR WORK FROM ESTABLISHED REFERENCE POINTS AND BE RESPONSIBLE FOR ALL LINES, ELEVATIONS AND MEASUREMENTS IN CONNECTION WITH THEIR WORK.
4. IF ANY ERRORS OR OMISSIONS APPEAR IN THE DRAWINGS, GENERAL NOTES OR OTHER DOCUMENTS, THE CONTRACTOR SHALL NOTIFY THE ARCHITECT/ENGINEER IN WRITING OF SUCH OMISSION OR ERROR PRIOR TO PROCEEDING WITH ANY WORK WHICH APPEARS IN QUESTION. IN THE EVENT OF THE CONTRACTOR'S FAILING TO GIVE SUCH AN ADVANCED NOTICE, HE SHALL BE HELD RESPONSIBLE FOR THE RESULTS OF ANY SUCH ERRORS OR OMISSIONS AND THE COST OF RECTIFYING THE SAME.
5. THE CONTRACTOR SHALL USE THE STRUCTURAL DRAWINGS AND SPECIFICATIONS TOGETHER WITH THE ARCHITECTURAL, MECHANICAL, ELECTRICAL AND OTHER TRADE DRAWINGS AND SHOP DRAWINGS. NOTIFY ARCHITECT/ENGINEER, IN WRITING, OF ANY POTENTIAL CONFLICTS BEFORE PROCEEDING WITH THE WORK.
6. EXISTING STRUCTURES AND/OR EXISTING STRUCTURAL CONDITIONS SHOWN IN THESE DOCUMENTS HAVE BEEN OBTAIN BY THE ARCHITECT/ENGINEER TO THE EXTENT POSSIBLE DURING THE DESIGN OF THE PROJECT, AND IS BASED ON EXISTING LEGIBLE PLANS (IF AVAILABLE) AND/OR LIMITED FIELD INVESTIGATION. THIS INFORMATION MAY BE PARTIAL, INCOMPLETE OR INACCURATE. AS SOON AS A CONTRACTOR HAS BEEN SELECTED FOR THIS PROJECT, THE EXISTING ELEMENTS THAT ARE AFFECTED BY, OR AFFECT THE NEW CONSTRUCTION, SHALL BE EXPOSED AND FULLY INVESTIGATED AS REQUIRED TO DETERMINE THEIR STRUCTURAL INTEGRITY, CAPACITY AND GENERAL CONDITION. NO NEW WORK SHALL COMMENCE UNTIL EXISTING CONDITIONS HAVE BEEN CONFIRMED, REPORTED TO OR OBSERVED BY THE A/E FOR A POSSIBLE MODIFICATION OR REDESIGN.

SHOP DRAWINGS REVIEW:

1. ALL SHOP DRAWINGS SHALL BE SUBMITTED FOR ENGINEER'S REVIEW ONLY AFTER THEY HAVE BEEN THOROUGHLY REVIEWED BY THE CONTRACTOR FOR CONSTRUCTION METHODS, DIMENSIONS, FIELD CONDITIONS, "AS-CONSTRUCTED" DIMENSIONS AND OTHER TRADE REQUIREMENTS, AND STAMPED WITH THE CONTRACTOR'S APPROVAL STAMP.
2. THE SHOP DRAWING REVIEW BY THE A/E OF RECORD IS ONLY FOR GENERAL CONFORMANCE WITH THE DESIGN CONCEPT AND INFORMATION GIVEN IN THE CONSTRUCTION DOCUMENTS. CORRECTIONS OR COMMENTS MADE ON THE SHOP DRAWINGS DURING THE A/E REVIEW DO NOT RELIEVE THE CONTRACTOR FROM COMPLIANCE WITH THE REQUIREMENTS OF THE PLANS AND SPECIFICATIONS. REVIEW OF A SPECIFIC ITEM SHALL NOT INCLUDE REVIEW OF AN ASSEMBLY OF WHICH THE ITEM IS A COMPONENT. THE CONTRACTOR IS RESPONSIBLE FOR DIMENSIONS TO BE CONFIRMED AND CORRELATED AT THE JOBSITE; INFORMATION THAT PERTAINS SOLELY TO THE FABRICATION PROCESSES OR TO THE MEANS, METHODS TECHNIQUES, SEQUENCES AND PROCEDURES OF CONSTRUCTION; COORDINATION OF THE WORK WITH THAT OF ALL OTHER TRADES AND PERFORMING ALL WORK IN A SAFE AND SATISFACTORY MANNER.
3. THE ENGINEER ASSUMES NO RESPONSIBILITY FOR DIMENSIONS, QUANTITIES, ENGINEERING DESIGN PREPARED BY DELEGATED ENGINEERS, ERRORS OR OMISSIONS AS A RESULT OF REVIEWING ANY SHOP DRAWINGS. ANY ERRORS OR OMISSIONS MUST BE MADE GOOD BY THE CONTRACTOR, IRRESPECTIVE OF RECEIPT, CHECKING OR REVIEW OF DRAWINGS BY THE ENGINEER AND EVEN THOUGH WORK IS DONE IN ACCORDANCE WITH SUCH DRAWINGS.
4. BEFORE STRUCTURAL INSPECTIONS CAN BE MADE ON A PORTION OF THE STRUCTURE, ALL RELATED SHOP DRAWINGS, DELEGATED ENGINEERING, PRODUCT APPROVAL, MANUFACTURER'S DATA AND OTHER RELATED INFORMATION, MUST BE REVIEWED AND ACCEPTED BY THE ENGINEER-OF-RECORD AND APPROVED BY THE BUILDING DEPARTMENT.
5. ALL SHOP DRAWINGS SHALL CONTAIN THE MINIMUM INFORMATION, OUTLINED IN THE LOCAL BUILDING CODE.

DELEGATED ENGINEERED SHOP DRAWINGS:

IN THE STATE OF FLORIDA, SEE SECTIONS OF "DELEGATED ENGINEERING RESPONSIBILITY" AND DEFINITIONS FOR SPECIFIC STRUCTURAL ELEMENTS / COMPONENTS DESIGNS, IN COMPLIANCE WITH CHAPTER 61G15, FLORIDA ADMINISTRATIVE CODE.

CONSTRUCTION MEANS AND METHODS:

1. THE CONSTRUCTION MEANS, METHODS, TECHNIQUES, SEQUENCE OR PROCEDURES, SAFETY PRECAUTIONS, SHORES, RESHORES, LATERAL BRACING AND PROGRAMS IN CONNECTION WITH THE PROJECT, ARE THE SOLE RESPONSIBILITY OF THE CONTRACTOR. OUR SERVICES DO NOT GUARANTEE NOR ASSURE LIABILITY FOR THE JOB SAFETY, TEMPORARY SHORING AND BRACING AND THE PERFORMANCE OF THE CONTRACTOR.
2. THE CONTRACTOR IS RESPONSIBLE AND SHALL COMPLY WITH THE SAFETY REQUIREMENTS OF LOCAL BUILDING CODE AND ALL OTHER APPLICABLE LOCAL, STATE AND FEDERAL LAWS.
3. PROVIDE ALL SHORING, BRACING AND SHEETING AS REQUIRED FOR SAFETY, STRUCTURAL STABILITY AND FOR THE PROPER EXECUTION OF THE WORK. REMOVE WHEN WORK IS COMPLETED.
4. PROVIDE AND MAINTAIN GUARD LIGHTS AT ALL BARRICADES, RAILINGS, ABSTRACTIONS IN THE STREETS, ROADS OR SIDEWALKS AND ALL TRENCHES OR PITS ADJACENT TO PUBLIC WALKS OR ROADS.
5. AT ALL TIMES, PROVIDE PROTECTION AGAINST WEATHER (RAIN, WIND, STORMS OR THE SUN), SO AS TO MAINTAIN ALL WORK, MATERIALS, APPARATUS AND FIXTURES FREE FROM INJURY OR DAMAGE. PROVIDE ADEQUATE BRACING TO THE ELEMENTS ALREADY IN PLACE (ESPECIALLY MASONRY WALLS) AGAINST WIND FORCES CAPABLE OF DAMAGING THIS WORK.
6. AT THE END OF THE DAYS WORK, COVER ALL WORK LIKELY TO BE DAMAGED. ANY WORK DAMAGED BY FAILURE TO PROVIDE PROTECTION SHALL BE REMOVED AND REPLACED WITH NEW WORK AT THE CONTRACTOR'S EXPENSE.
7. "OSHA" SAFETY INSPECTIONS ARE NOT A PART OF OUR SERVICES. OUR PRESENCE ON SITE (FOR OBSERVATIONS, INSPECTIONS OF THE WORK IN PROGRESS OR MEETINGS) SHALL NOT CONSTRUED AS OUR ACTING AS "OSHA" INSPECTORS. CONFORMING WITH ALL APPLICABLE "OSHA" SAFETY REGULATIONS IS THE SOLE RESPONSIBILITY OF THE CONTRACTOR.

REQUIRED DELEGATED ENGINEERED CALCULATIONS AND SHOP DRAWINGS:

THIS PROJECT REQUIRE THE FOLLOWING DELEGATED ENGINEERED CALCULATIONS AND SHOP DRAWINGS, BASED ON THE "FLORIDA ADMINISTRATIVE CODE", SECTIONS 61G15-30 AND 61G15-31 (ONLY THE ITEMS MARKED [X] APPLY):

- [X] WOOD TRUSSES, GIRDER TRUSSES AND PREFABRICATED WOOD COMPONENTS (61G15-31.003)
- [ ] STEEL BAR-JOISTS AND STEEL GIRDER-TRUSSES (61G15-31.006)
- [ ] COLD-FORM STUD TRUSSES, JOISTS AND/OR WALLS (61G15-31.009)
- [ ] STRUCTURAL STEEL SYSTEM (61G15-31.009)
- [ ] PRE-ENGINEERED METAL BUILDINGS (61G15-31.007)
- [ ] PRE-ENGINEERED CONCRETE FLOOR/ROOF SYSTEM, INCLUDING CONCRETE GIRDERS, PRECAST ELEMENTS, COMPOSITE ELEMENTS, ETC. (61G15-31.005, 31.007 & 31.009)

DELEGATED ENGINEERED SERVICES REQUIRED FOR THIS PROJECT:

(BASED ON CHAPTER 61G15 OF THE "FLORIDA ADMINISTRATIVE CODE")

NOTE THAT THE LANGUAGE USED BELOW IS NOT ALWAYS A DIRECT COPY FROM THE ADMINISTRATIVE CODE. THE DELEGATED ENGINEER SHALL BE FAMILIAR WITH THE CODE AS PUBLISHED IN THE STATE OF FLORIDA.

"EOR" - DENOTES "ENGINEER-OF-RECORD"
"DE" - DENOTES "DELEGATED ENGINEER"

61G15-30.005: REQUEST FOR & REVIEW OF DELEGATED ENGINEERING DOCUMENTS:
(1) PORTIONS OF THIS STRUCTURAL DESIGN AND DETAILING ARE BEING DELEGATED TO A "DE". THE ENGINEERING DESIGN REQUIREMENTS HAVE BEEN INCLUDED IN THESE DOCUMENTS (PLANS, DETAILS, SECTIONS AND NOTES).
(2) ALL DELEGATED ENGINEERING DOCUMENTS, PREPARED BY THE "DE" SHALL BE SUBMITTED TO THE "EOR" TO BE REVIEWED FOR COMPLIANCE WITH THE PROJECT DESIGN REQUIREMENTS AND TO CONFIRM THE FOLLOWING:
(A) THAT THE DELEGATED ENGINEERING DOCUMENTS HAVE BEEN PREPARED BY A "PROFESSIONAL ENGINEER" (LICENSED IN THE STATE OF FLORIDA). (***)
(B) THAT THE DELEGATED ENGINEERING DOCUMENTS PREPARED BY THE "DE" CONFIRM WITH THE DESIGN INTENT OF THE "EOR" AND MEET THE WRITTEN REQUIREMENTS.
(C) THAT THE EFFECT OF THE "DE" WORK ON THE OVERALL PROJECT, GENERALLY CONFORMS WITH THE INTENT OF THE "EOR".
(***) THE "EOR" ASSUMES THAT THE "DE" PROFESSIONAL LICENSE IS ACTIVE. IT IS THE SOLE RESPONSIBILITY OF THE "DE" (AND NOT OF THE "EOR") TO ASSURE AND DEMONSTRATE (IF REQUIRED) THAT HIS/HER LICENSE IS ACTIVE IN THE STATE OF FLORIDA.

61G15-30.006: DELEGATED ENGINEER'S RESPONSIBILITY:
(1) THE "DE" SHALL REVIEW THE "EOR" WRITTEN ENGINEERING REQUIREMENTS TO DETERMINE THE APPROPRIATE SCOPE OF THE DELEGATED ENGINEERING WORK.
(2) THE DELEGATED ENGINEERING DOCUMENTS SHALL COMPLY WITH THE DESIGN DOCUMENTS PREPARED BY THE "EOR". THEY SHALL INCLUDE THE PROJECT IDENTIFICATION AND THE DESIGN CRITERIA USED IN ITS PREPARATION. IF THE "DE" DETERMINES THERE ARE DETAILS, FEATURES OR UNANTICIPATED PROJECT LIMITS CONFLICTING WITH THE "EOR" PLANS, THE "DE" SHALL TIMELY CONTACT THE "EOR" FOR RESOLUTIONS OF CONFLICTS. (***)
(3) THE "DE" SHALL FORWARD THE DELEGATED ENGINEERING DOCUMENT TO THE "EOR" FOR REVIEW. ALL FINAL DELEGATED ENGINEERING DOCUMENTS REQUIRE THE IMPRESSED SEAL AND SIGNATURE OF THE "DE" AND INCLUDE:
(A) DRAWINGS INTRODUCING ENGINEERING INPUT SUCH AS DEFINING THE CONFIGURATION OR STRUCTURAL CAPACITY OF STRUCTURAL COMPONENTS AND/OR THEIR ASSEMBLY INTO STRUCTURAL SYSTEMS.
(B) CALCULATIONS.
(C) COMPUTER PRINTOUTS (COMPLEMENTING OR INSTEAD OF MANUAL CALCULATIONS) ACCOMPANIED BY SUFFICIENT DESIGN ASSUMPTIONS AND IDENTIFIED INPUT/OUTPUT INFORMATION TO PERMIT THEIR PROPER EVALUATION.
SUCH INFORMATION SHALL BEAR THE IMPRESSED SEAL AND SIGNATURE OF THE "DE" AS AN INDICATOR THAT SAID ENGINEER HAS ACCEPTED RESPONSIBILITY FOR THE RESULTS.
(***) SHOULD ADDITIONAL INFORMATION BE REQUIRED BY THE "DE", HE/SHE CAN COMMUNICATE THESE QUESTIONS OR ADDITIONAL INFORMATION REQUIREMENTS, ON A TIMELY MANNER TO THE "EOR" (WITH COPIES TO THE CONTRACTOR).

NOTE: BASED ON SECTION 61G15-31.002 (DEFINITIONS), ITEM (6): STRUCTURAL SUBMITTALS WHICH DO NOT REQUIRE THE SEAL OF A PROFESSIONAL ENGINEER, INCLUDE:
(a) DRAWING PREPARED SOLELY TO SERVE AS A GUIDE FOR FABRICATION AND INSTALLATION AND REQUIRE NO ENGINEERING INPUT SUCH AS REINFORCING STEEL SHOP DRAWINGS, STRUCTURAL STEEL, AND STEEL JOIST AND GIRDER ERECTION DRAWINGS.

61G15-31.003: DESIGN OF STRUCTURES UTILIZING FABRICATED WOOD COMPONENTS:
(1) APPOINTMENT OF RESPONSIBILITY BETWEEN THE "EOR" AND "DE" SHALL BE AS PER ANSI/TPI 1-1995 (CHAPTER 2).
(2) IN THE CASE OF A TRUSS DESIGN PACKAGE, A COVER OR INDEX SHEET SHALL BE SIGNED AND SEALED BY THE "DE" AND SHALL CONTAIN THE FOLLOWING:
(A) THE NAME, ADDRESS AND LICENSE NUMBER OF THE "DE" FOR THE TRUSS DESIGN PACKAGE.
(B) IDENTIFICATION OF THE PROJECT, NAME OF THE AUTHORITY HAVING JURISDICTION (CITY, COUNTY), THE LOADS, THE NAME AND DATE OF THE APPLICABLE BUILDING CODE THAT THE TRUSS DESIGN INTENDED TO MEET AND ALL LOADS IMPOSED ON THE STRUCTURE.
(C) TRUSS ENGINEERING DESIGN CRITERIA WITH FULL IDENTIFICATION OF THE SOURCE OF THE CRITERIA. THE SOURCE WILL BE EITHER THE "EOR" OR THE "DE" EMPLOYED BY THE TRUSS MANUFACTURER. THE "EOR" SHALL BE IDENTIFIED BY NAME, LICENSE NUMBER AND ADDRESS, ALONG WITH A CHECKMARK TO INSURE THAT THE DRAWINGS HAVE BEEN REVIEWED AS REQUIRED BY RULE 61G15-006(3).
(D) A TRUSS LAYOUT PLAN, BY THE "DE" SHOWING THE LOCATION AND DESIGNATION OF EACH COMPONENT.
(E) IDENTIFICATION OF THE COMPUTER PROGRAM USED FOR ENGINEERING THE TRUSSES.
(F) AN INDEX OF THE ATTACHED DRAWINGS. THE NAMING AND NUMBERING SYSTEM UTILIZED FOR THE DRAWINGS SHALL BE CLEAR AS TO THE NUMBER (QUANTITY) OF DRAWINGS IN THE SET AND THE DATE OF EACH DRAWING.
(G) EACH OF THE DRAWINGS IN THE PACKAGE SHALL BEAR A TITLE BLOCK BEARING THE PRINTED NAME, ADDRESS, CONTACT PHONE NUMBER AND LICENSE NUMBER OF THE "DE" FOR THE TRUSS DESIGN, AND THE DATE OF THE DRAWING.

"SPECIAL INSPECTION" REQUIREMENTS:

(MIAMI-DADE AND BROWARD COUNTY ONLY)

THIS PROJECT REQUIRES THE SERVICES OF A "SPECIAL INSPECTOR" FOR THE ITEMS MARKED [X]:

- [ ] PRECAST UNITS (FOR QUALITY CONTROL AT CASTING YARD) - FBC 1927.12.1 (*)
- [ ] PRECAST UNITS AND ATTACHMENTS TO MAIN STRUCTURE (AFTER ERECTION BUT BEFORE CONCEALMENT) - FBC 1927.12.2 (*)
- [ ] ENGINEERED UNIT MASONRY - FBC 2122.4 (*)
- [ ] CONNECTIONS - FBC 2218.2 (*)
- [ ] METAL SYSTEMS BUILDING - FBC 2223.11.1 (*)
- [X] PILE DRIVING - FBC 1820.1.20
- [ ] SOIL COMPACTION - FBC 1820

(*) ITEM INSPECTED BY A FLORIDA REGISTERED ARCHITECT OR PROFESSIONAL ENGINEER.

SEE THE SPECIFIC COUNTY OR CITY FOR THEIR FORM FOR "SPECIAL INSPECTOR" SERVICES, TO BE PART OF THE PERMIT PLANS.

STEEL HELICAL PILE (UNDERPINNING OF EXISTING FOOTING):

BASED ON SOIL TESTING AND GEOTECHNICAL REPORT BY" "FLORIDA ENGINEERING & TESTING, INC." (REPORT DATED: JAN. 13, 2009)

1. PILES SHALL BE 2-3/4" MINIMUM PIPE DIAMETER - FOLLOW MANUFACTURER'S SPECIFICATIONS FOR SHAFT AND HELICAL SIZES. PILES SHALL BE GALVANAIZED OR OTHERWISE RUST PROOF COATED.
2. PILES SHALL BE DRIVEN INTO GROUND TO DEVELOP:
   EIGHT (8) TONS SAFE BEARING (GRAVITY) CAPACITY.
   FIVE (5) TONS SAFE TENSION (UPLIFT) CAPACITY.
3. THE PILE DRIVING SHALL BE INSPECTED AND THE CAPACITY ACHIEVED BE CERTIFIED BY THE PROJECT'S GEOTECHNICAL ENGINEER.
4. PROVIDE A STEEL BRACKET, WELDED TO TOP OF PILE AND ANCHORED INTO THE EXISTING CONCRETE FOOTING. SEE HELICAL PILE UNDERPINNING SHOP DRAWINGS FOR ALL INFORMATION.
5. IN THE EVENT OF ANY DISCREPANCY IN THE BEARING CAPACITY OF THE PILE WHEN DRIVEN INTO THE GROUND, THE PILE INSTALLER SHALL NOTIFY THE ARCHITECT/ENGINEER IMMEDIATELY AND THE DEVIATION SHALL BE REMEDIED PRIOR TO PROCEEDING WITH ANY FURTHER WORK.
6. PILE INSTALLER SHALL HAVE A MINIMUM 5 YEAR EXPERIENCE IN HELICAL PILE INSTALLATION

STRUCTURAL WOOD:

1. TO CONFORM TO RULES OF THE MANUFACTURER'S ASSOCIATION UNDER WHOSE RULES THE LUMBER IS PRODUCED. (SEE SUPPLIER'S SPECIFICATIONS).
2. TO BE AIR DRIED, WELL SEASONED AND GRADE MARKED AT MILL.
3. TO BE SOUTHERN PINE, WITH THE FOLLOWING PROPERTIES: (ALL IN P.S.I. UNITS)
   2-4 x 4 NO. 2 Fb(s)=1,500 Fb(r)=1,720 Ft=825 Fc=1,650 E=1,600,000
   2-4 x 6 NO. 2 Fb(s)=1,250 Fb(r)=1,440 Ft=725 Fc=1,600 E=1,600,000
   2-4 x 8 NO. 2 Fb(s)=1,200 Fb(r)=1,380 Ft=650 Fc=1,550 E=1,600,000

WHERE:
Fb(s) = EXTREME FIBER IN BENDING (SINGLE MEMBER)
Fb(r) = EXTREME FIBER IN BENDING (REPETITIVE MEMBER)
Ft = TENSION PARALLEL TO GRAIN
Fc = COMPRESSION PARALLEL TO GRAIN
E = MODULUS OF ELASTICITY
Fv = HORIZONTAL SHEAR = 175 PSI - ALL WOOD SIZES.

4. ALL STRUCTURAL WOOD TO BE SURFACED FOUR (4) SIDES (S-4-S) A AND MAXIMUM MOISTURE CONTENT OF 19 PERCENT.
5. ALL LUMBER AND PLYWOOD IN CONTACT WITH CONCRETE, STUCCO, MASONRY OR OTHER CEMENTITIOUS MATERIALS SHALL BE TREATED WITH AN E.P.A. ACCEPTABLE WOOD PRESERVATIVE (SUCH AS "AQC" - ALKALINE-COPPER-QUATERNARY OR "CBA-A" COPPER AZOLE TYPE A & B).
6. ALL WOOD CONNECTORS SHALL BE GALVANIZED STEEL OR RUST-PROOF PAINTED STEEL (U.O.N.). ALL GALVANIZED METAL CONNECTORS IN CONTACT WITH TREATED WOOD (ITEM #5) SHALL BE "TRIPLE-ZINK G-185" GALVANIZED. ANY FIELD WELDS (INTERIOR OR EXTERIOR) OF SUCH CONNECTORS SHALL BE WIRE BRUSH CLEANED AND RUST PROOF PAINTED. NAILS WHICH ARE PART OF THE "USP" SPECIFIED CONNECTORS (IN REGULAR WOOD) SHALL BE COMMON NAILS (UNLESS OTHERWISE SPECIFIED IN THE CATALOG FOR SPECIFIC CONNECTORS).
7. STORE ALL LUMBER ABOVE GRADE OR FLOOR. STACK TO ALLOW PROPER AIR CIRCULATION AND PROTECT FROM WETTING WITH SUITABLE COVER.

WOOD TRUSSES: (DELEGATED ENGINEERED SHOP DRAWING REQUIRED)

1. DESIGN AND FABRICATE MEMBERS IN ACCORDANCE WITH "NATIONAL DESIGN SPECIFICATIONS FOR WOOD CONSTRUCTION" (NDS) "AMERICAN FOREST AND PAPER ASSOCIATION" (AFPA) AND "DESIGN SPECIFICATIONS FOR METAL PLATE CONNECTED WOOD TRUSSES" (ANSI/TPI 1). ALL OF THE EDITION SPECIFIED IN THE BUILDING CODE AT THE TIME OF PERMIT APPLICATION.
2. TRUSSES CALCULATIONS AND SHOP DRAWINGS SHALL BE SIGNED AND SEALED BY A PROFESSIONAL ENGINEER REGISTERED IN THE STATE OF THE PROJECT, WHO SHALL BE ASSIGNED AS A DELEGATED ENGINEER FOR THE CONTRACTOR. THE DELEGATED ENGINEER DESIGN AND INDICATE ON THE SHOP DRAWINGS ALL TRUSS COMPONENTS, TEMPORARY BRACING, BRIDGING, HARDWARE, METAL HANGERS, ANCHORS AND METAL SHAPES AS REQUIRED BY DESIGN OR AS INDICATED ON THE PLANS. ALL METAL PARTS TO BE GALVANIZED.
3. ALL TRUSS CONNECTIONS TO THE SUPPORTING WALLS OR BEAMS, HAVE BEEN CALCULATED BY THE ARCHITECT/ENGINEER OF RECORD, BASED ON WIND UPLIFT FORCES CALCULATED BASED ON "COMPONENT & CLADDING" SHAPE FACTORS. COMBINATION "UPLIFT + LATERAL" FORCES ON THE TRUSS BEARING CONNECTORS, HAVE BEEN CALCULATED BASED ON "MAIN FRAME" WIND FACTORS.
4A. THE TRUSS DESIGNER SHALL SPECIFY AND INDICATE ON THE SHOP DRAWINGS ALL THE TRUSS TO TRUSS OR TO GIRDER TRUSS CONNECTIONS (SEATS, BRACKETS, STRAPS, CLIPS, ETC.).
4B. THE ARCHITECT/ENGINEER OF RECORD SPECIFIED THE TRUSS OR GIRDER-TRUSS CONNECTIONS TO STEEL, MASONRY, WOOD BEAMS/PARTITIONS OR CONCRETE SUPPORTS.
5. THE STRUCTURAL PLANS INDICATE ALL THE REQUIRED LATERAL PERMANENT BRIDGING, AS RECOMMENDED BY THE "TRUSS PLATE INSTITUTE". TRUSS DESIGNER ENGINEER SHALL PROVIDE INFORMATION AND SHOW ON PLAN, ALL LATERAL BRACING OF ANY TRUSS INDIVIDUAL MEMBERS, AS REQUIRED BY THE TRUSS DESIGN AND FOR STABILITY AND SAFETY DURING ERECTION.
6. TRUSSES SHALL BE INSTALLED WITHIN THE "OUT OF PLUMB" AND "OUT OF PLANE" TOLERANCES, AS PER THE "TRUSS PLATE INSTITUTE". ANY TRUSS EXCEEDING THE SPECIFIED PLUMB TOLERANCE MUST BE REALIGNED OR REPLACED.
7. ALL WOOD TRUSS CONNECTORS SHALL BE GALVANIZED STEEL OR RUST-PROOF PAINTED STEEL. ANY FIELD WELDS (INTERIOR OR EXTERIOR) OF SUCH CONNECTORS SHALL BE WIRE BRUSH CLEANED AND RUST PROOF PAINTED. SEE "WOOD" SECTION FOR GALVANIZED CONNECTORS AND TREATED WOOD REQUIREMENTS.
8. CONTRACTOR SHALL NOT CUT, MODIFY OR ALTER ANY TRUSSES. IN THE EVENT THAT A TRUSS NEEDS MODIFICATIONS OR ALTERATION, THE CONTRACTOR SHALL NOTIFY THE TRUSS COMPANY WHO WILL INSPECT THE FIELD CONDITION AND PROVIDE REMEDY DETAIL(S) SIGNED AND SEALED BY THE TRUSS DELEGATED ENGINEER, TO BE REVIEWED BY THE A/E OF RECORD, PRIOR TO START OF REPAIR WORK.
9. INSTALLATION OF TRUSSES LONGER THAN 35 FT. OR HIGHER THAN 6 FT. SHALL BE MADE UNDER THE DIRECT SUPERVISION OF A FLORIDA REGISTERED ARCHITECT OR A REGISTERED STRUCTURAL ENGINEER.
10. TRUSS DESIGN REQUIREMENTS:
A. TRUSS DESIGNER SHALL COMPUTE THE WIND LOADS BASED ON BOTH "MAIN FRAME" AND "COMPONENTS & CLADDING" FORMULAS AND ASCE-7 FACTORS.
TRUSSES' AND GIRDER-TRUSSES' INTERNAL MEMBERS AND CONNECTIONS SHALL BE DESIGNED TO RESIST THE MORE SEVERE LOADS (COMPUTED BY THE ABOVE NOTED TWO METHODS). TRUSS OR JOIST BEARING POINT REACTIONS SHALL BE COMPUTED IN THE SAME MANNER.
B. NOTE THAT TRUSSES LOCATED WITHIN THE PERIMETER OR CORNER ZONES, SHALL BE DESIGNED TO RESIST THE HIGHER WIND FORCES CALCULATED IN THESE ZONES.
C. TRUSS COMPUTATIONS SHALL CLEARLY INDICATE ALL THE DIFFERENT LOADING COMBINATIONS USED IN THE COMPUTER PROGRAM.
D. SHOULD THE TRUSS DESIGNER REQUIRE WIND LOADING DATA FOR EACH ZONE, CONTACT THE ENGINEER-OF-RECORD.
E. TRUSS DESIGN DRAWINGS SHALL INCLUDE THE FOLLOWING, AS MINIMUM INFORMATION:
(I) SPAN, DEPTH OR SLOPE AND SPACING OF TRUSSES.
(II) REQUIRED BEARING WIDTH.
(III) DESIGN LOADS (ALONG TOP AND BOTTOM CHORDS). INDICATE LIVE LOADS, DEAD LOADS, CONCENTRATED LOADS (WITH POINT OF APPLICATION) WIND FORCES AND REQUIREMENTS.
(IV) ADJUSTMENT TO LUMBER AND PLATE DESIGN LOADS FOR CONDITION OF USE.
(V) REACTIVE FORCES, THEIR POINT OF OCCURRENCE AND DIRECTION.
(VI) CONNECTION PLATE TYPE, GAGE, SIZE AND LOCATION (AT EACH JOINT).
(VII) LUMBER SIZE, SPECIES AND GRADE FOR EACH MEMBER.
(VIII) LOCATION OF ANY REQUIRED CONTINUOUS LATERAL BRACING.
(IX) CALCULATED DEFLECTION RATIO AND/OR MAXIMUM DEFLECTION FOR LIVE AND TOTAL LOADS.
(X) MAXIMUM AXIAL COMPRESSIVE FORCES IN TRUSS MEMBERS.
(XI) LOCATION OF JOINTS.
(XII) CONNECTION REQUIREMENTS FOR: TRUSS TO GIRDERS
TRUSS PLY TO PLY
FIELD SPLICES

PLYWOOD ROOF DECKING AND DIAPHRAGM:

1. PLYWOOD DIAPHRAGM SHALL COMPLY WITH THE DESIGN RECOMMENDATIONS OF "A.P.A. DESIGN/CONSTRUCTION GUIDE - DIAPHRAGMS" AND THE APPLICABLE SECTIONS OF THE LOCAL BUILDING CODE.
2. INSPECTIONS: COMPLY WITH THE LOCAL BUILDING CODE REQUIREMENTS FOR INSPECTIONS (BY THE LOCAL BUILDING DEPARTMENT, ARCHITECT OR ENGINEER) OF SPECIFIED COMPONENTS OF THE DECK/ROOF STRUCTURE REQUIRING INSPECTIONS.
3. PLYWOOD ROOF DECKING:
A. SHALL BE 19/32" MINIMUM THICKNESS, "CDX" TYPE AND SHALL BE CONTINUOUS OVER THREE OR MORE SPANS, WITH FACE GRAIN PERPENDICULAR TO THE SUPPORTS.
B. CONNECT PLYWOOD ROOF DIAPHRAGM TO STRUCTURE WITH 8d (MINIMUM) GALV., RINK-SHANK NAILS, SPACED AT 6" O.C. MAX. AT SUPPORTED EDGES AND AT 6" O.C. ALONG THE INTERMEDIATE SUPPORTS.
GABLE ENDS AND PERIMETER NAIL SPACING SHALL BE 4" ON CENTERS MAXIMUM TO A DISTANCE OF 48" FROM EDGE OF ROOF.

PLYWOOD WALL SHEATHING:

1. SHALL BE 19/32" MINIMUM THICKNESS, "CDX" TYPE AND SHALL BE CONTINUOUS OVER THREE OR MORE SPANS, WITH FACE GRAIN PERPENDICULAR TO THE SUPPORTS.
2. CONNECT PLYWOOD SHEATHING TO WOOD STUD STRUCTURE WITH 8d GALV. NAILS, SPACED AT 8" O.C. MAX. THRUOUT.

STRUCTURAL DESIGN CRITERIA:

1. THE DESIGN COMPLIES WITH THE REQUIREMENTS OF THE FOLLOWING CODE(S):
   MIAMI-DADE AND BROWARD COUNTIES ONLY (H.V.H.Z.):
   2004 FLORIDA BUILDING CODE - RESIDENTIAL (CHAPTER 44)
   2004 FLORIDA BUILDING CODE - EXISTING BUILDING
   THE FLORIDA BUILDING CODE - BROWARD COUNTY AMENDMENTS (2005)

FLORIDA BUILDING CODE - 2007 SUPPLEMENT IS INCLUDED WITH ALL THE ABOVE.

ALL CODES, SPECIFICATIONS AND OTHER APPLICABLE REFERENCES, SHALL BE OF THE EDITION INDICATED IN THE ABOVE REFERENCED CODE.

2. DESIGN GRAVITY LOADS:

U S E:	SUPERIMPOSED LOADS: LIVE (PSF)	DEAD (PSF)
ROOF TRUSSES (TOP CHORD)	30	15
ROOF TRUSSES (BOTTOM CHORD)	---	10

STRUCTURAL DESIGN CRITERIA - WIND:

1. WIND DESIGN CRITERIA:
WIND DESIGN CODE: ASCE-7(02) WIND VELOCITY : 140 MPH METHOD 2
EXPOSURE CATEGORY: "C" BUILDING CATEGORY: 2 CORNER DISTANCE = 3.00 FT.
IMPORTANCE FACTOR: 1.00 ENCLOSED BUILDING (GCPI = ±0.18)
MEAN ROOF HEIGHT = 20.50 FT. (SLOPING ROOF) (Kd = 1.00)

WIND FORCE SUMMARY:

MAIN WIND FORCE RESISTING SYSTEM (PSF)

BUILDING ELEMENT	ZONE 1	ZONE 2	ZONE 3	ZONE 4	ZONE 5	ZONE 6
ROOF (SLOPE)		-39.6	-29.6			
WALL	+31.8			-27.3	-28.7	-28.7

COMPONENTS AND CLADDING (PSF)

BUILDING ELEMENT	ZONE 1	ZONE 2	ZONE 3	ZONE 4(+)	ZONE 4(-)	ZONE 5(-)
SLOPED ROOF	-46.8	-73.6	-73.6			
ROOFING (SLOPE)	-49.1	-85.5	-85.5			
ROOF - OVERHANG		-100.0	-168.3			
WALL				+50.2	-54.8	-64.9
WINDOWS / DOORS	(10 SQ.FT)			+45.6	-49.5	-71.9

(Kd=0.85 SEE NOTE #3)

2. THE WIND LOADS INDICATED IN THE TABLE ABOVE HAVE BEEN CALCULATED BASED ON THE "MAIN-FRAME" DESIGN FACTORS OF THE "ASCE-7". STRUCTURAL ELEMENTS EXPOSED TO WIND HAVE BEEN DESIGNED BASED ON "COMPONENTS & CLADDING" FACTORS OF THE CODE. DELEGATED ENGINEERS, PROVIDING DESIGN CALCULATIONS FOR WOOD TRUSSES, JOISTS AND GIRDERS OR OTHER ROOF, FLOOR OR WALL COMPONENTS SUBJECTED TO WIND FORCES, SHALL COMPUTE SAID ELEMENTS TO RESIST WIND FORCES BASED ON THE "WORST CASE" OF EITHER "MAIN-FRAME" OR "COMPONENTS & CLADDING". NOTE THE DIFFERENT FORCES CALCULATED IN THE "FIELD ZONE" AND THE "PERIMETER / CORNER ZONES". ALL WIND FORCES USED IN THE CALCULATIONS SHALL BE CLEARLY INDICATED IN THE SUBMITTED SHOP DRAWINGS AND/OR CALCULATIONS. SHOULD THE DELEGATED ENGINEER HAVE ANY QUESTIONS REGARDING THE WIND LOAD CALCULATIONS, CONTACT THE A/E FOR DATA.

ELECTRIC NOTES

- ALL ELECTRIC WORK SHALL BE IN ACCORDANCE WITH THE NATIONAL ELECTRIC CODE.
- MOUNT ALL SWITCHES 42' A.F.F. AND ALL RECEPTACLES 18' A.F.F. MOUNT WALL HUNG FIXTURES NOT LOWER THAN 80" A.F.F. TO BOTTOM OF FIXTURE.
- OWNER / CONTRACTOR SHALL SELECT LIGHT FIXTURES TYPE AND SUBMIT TO ARCHITECT FOR APPROVAL FOR LOCATION USAGE.
- ALL EXTERIOR RECEPTACLES (WEATHER PROOF) FOR GENERAL PURPOSE AND BATHROOM / RESTROOM SHALL HAVE GROUND FAULT CIRCUIT INTERRUPTER.
- SMOKE DETECTORS SHALL BE 110 V.o/t WITH BATTERY BACK UP TYPE, INTERCONNECTED HARDWIRED TO NON SWITCHABLE INDIVIDUAL CIRCUIT. LOCATE ON OR NEAR CEILING IN THE IMMEDIATE VICINITY OUTSIDE AND INSIDE BEDROOMS AT DOORWAY AND AT STAIRWAY LANDINGS. LOCATE NO CLOSER THAN 3 Feet TO A/C DIFFUSER GRILL.
- THE ELECTRICAL CONTRACTOR SHALL NOTIFY ARCHITECT OF ANY CHANGES TO EQUIPMENT LOADS DIFFERENT THAN SCHEDULE PANEL LOADS.
- GROUNDING ELECTRODES SHALL BE COPPER THU IN ON CONTINOUS LENGTH OR SPLICES IN BUSSARS SHALL BE PERMITTED AND SHALL BE ENCLOSED IN CONDUIT ENCLOSURE SECURELY FASTENED TO THE SURFACE ON WHICH IT IS CARRIED TO EXPOSED CONNECTIONS FOR GROUNDING. METHODS FOR SECURING GROUND SHALL BE PERMANENT. PROVIDE GROUNDING ELECTRODES FROM ALL SERVICE EQUIPMENT OR SEPERATLEY DERIVED SYSTEM TO WATER PIPE OR STRUCTURAL METAL BUILDING MEMBER AND FROM THAT POINT TO ONE OF THE ELECTRODES SHOUN FOR GROUNDING.
- BONDING SHALL BE PROVIDED WHERE NECESSARY TO ASSURE ELECTRICAL CONTINUITY AND THE CAPACITY TO CONDUCT SAFELY ANY FAULT CURRENT LIKELY TO BE IMPOSED. ALL NON-CURRENT CARRYING METAL PARTS OF SERVICE EQUIPMENT SHALL BE EFFECTIVELY BONDED TOGETHER.
  AN ACCESSIBLE MEANS EXTERNAL TO ENCLOSURES FOR CONNECTING INTER-SYSTEM BONDING AND GROUNDING CONDUCTORS SHALL BE PROVIDED AT THE SERVICE BY EITHER EXPOSED METALLIC SERVICE RACEWAYS, EXPOSED GROUNDING ELECTRODES CONDUCTOR OR APPROVED MEANS FOR THE EXTERNAL CONNECTION OF A BONDING, OR GROUNDING CONDUCTOR TO THE SERVICE RACEWAY OR EQUIPMENT.
  METHODS OF BONDING SHALL BE BY SCREWS, CLIPS, THREADED COUPLING AND CONNECTORS, BONDING JUMPERS OR OTHER DEVICES SUCH AS BONDING TYPE LOCKNUTS AND BUSHINGS.
- TESTING- ALL WIRING SHALL BE FREE FROM SHORT CIRCUITS AND GROUNDS AND SHALL BE TESTED FOR THESE DEFECTS PRIOR TO BEING CONNECTED TO THE CIRCUITS.
- GROUNDING CONDUCTOR MATERIAL TYPE AND SIZE AS PER PANEL SCHEDULE AND RISER.
  PROTECTION OF CONDUCTORS SHALL BE BY CONDUIT, BOXES AND COVERS STUD PLATES AND SLEEVES, RACEWAY ETC.TO INSURE ADEQUATE PROTECTION OF CONDUCTORS AGAINST DAMAGE.
- SEPARATE GROUNDING SYSTEM SHALL BE INSTALLED AND PROPERLY BONDED AS PER CODE AND USAGE REQUIREMENTS.
- ROMEX TYPE WIRING (2 CONDUCTOR WITH GROUND) COPPER MAY BE USED FOR LOCATIONS IN PLACE OF CONDUIT, (UNLESS OTHERWISE SPECIFIED)
- DWELLING UNIT BEDROOMS- ALL BRANCH CIRCUITS THAT SUPPLY 125 Volt, SINGLE PHASE 15 & 20 AMP OUTLETS INSTALLED IN DWELLING UNIT BEDROOMS SHALL BE PROTECTED BY AN ' ARC-FAULT CIRCUIT INTERRUPTER) BREAKERS. N.E.C. Art. 210-12

ELECTRIC LEGEND

RECEPTACLE	SINGLE 110 v
RECEPTACLE	DUPLEX 110 v
RECEPTACLE	SINGLE 240v
LIGHT FIXTURE 110 v	
SWITCH SINGLE 3- WAY	
EF EXHAUST FAN - CEILING	"BROAN MFG." MODEL # 670, 50 cfm 3" Dia. METAL DUCT THRU ROOF EXHAUST
SD SMOKE DETECTOR-	DETECTORS SHALL BE INTER-CONNECTED AND ON KITCHEN or BATHROOM LIGHT CIRCUIT, NON-SWITCHABLE
FAN 110 v	
HOME RUN	
C-1 CIRCUIT NUMBER	

NOTE
ELECTRICIAN SHALL TIE INTO EXISTING HOUSE PANEL SPARE CIRCUIT SPACE FOR THE FOLLOWING

CIRCUIT c-1,2,3 1P-15A CB, 3 * 14 ROMEX COPPER WIRING THU (LIGHTS & RECEPTACLES)	1,620 w
CIRCUIT c-4 1P-15A CB, 3 * 14 ROMEX COPPER WIRING THU (LIGHTS & RECEPTACLES)	600 w
CIRCUIT c-5 1P-15A CB (ARC FAULT), 3 * 14 ROMEX COPPER WIRING THU (LIGHTS & RECEPTACLES)	900 w
CIRCUIT c-6,7 1P-20A CB, 3 * 12 ROMEX COPPER WIRING THU (RECEPTACLES G.F.C.I.)	360 w
CIRCUIT c-8,10 2P-30 A CB, 3 *10 ROMEX COPPER WIRING THU (RECEPTACLE)	5,000 w
CIRCUIT c-9 1P-15A CB, 3 * 14 ROMEX COPPER WIRING THU (LIGHTS & RECEPTACLES)	1,080 w
	9,560 w = 40 AMPS

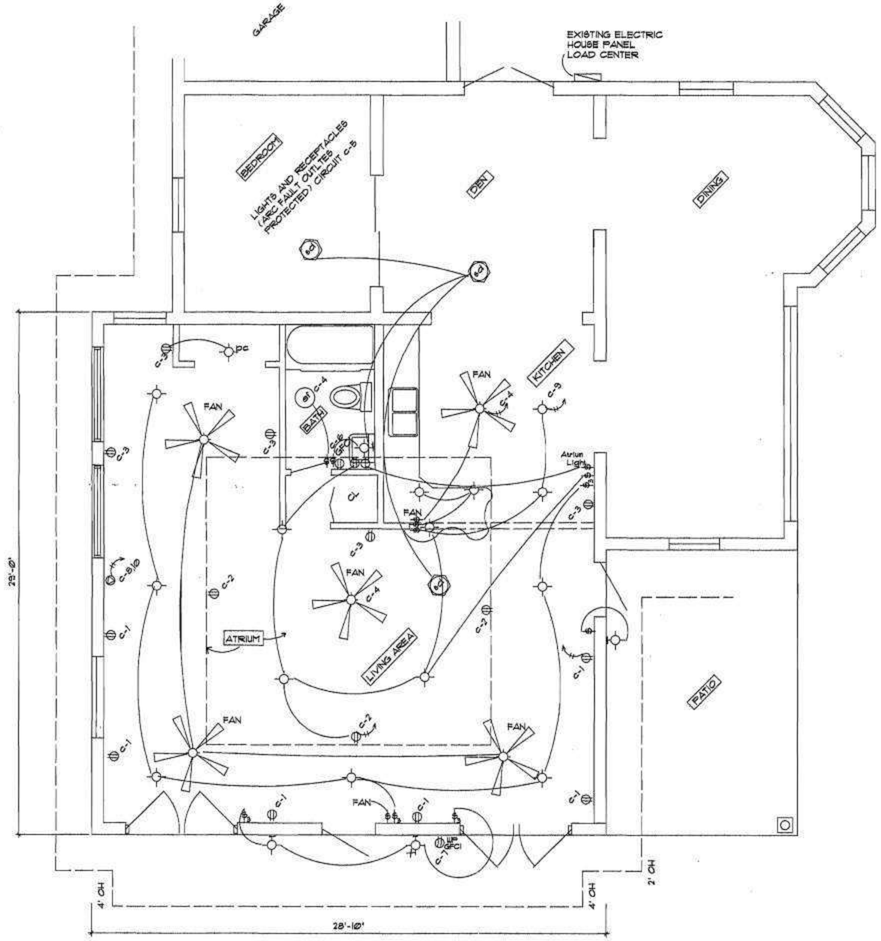

PARTIAL FLOOR PLAN- ELECTRIC AS-BUILT

ELECTRIC PLAN SHOWS AREA AFFECTED By SCOPE of WORK

RECEIVED
MAY 27 2009

Date 5/18/09
Rev

REPLACE EXISTING ROOF STRUCTURE
1404 Jackson Street
Hollywood, Florida

Date 5/18/09
SEAL
ROBERT G. ISHMAN

ROBERT G. ISHMAN P.A.
ARCHITECT
LICENSE AR 12684
2171 HOLLYWOOD BLVD.
HOLLYWOOD, FLORIDA 33020
Tel (954) 923-9695

PROJECT No. 2901

SCALE 1/4" = 1'- 0"

SHEET
E-1

of 4

N

Permit Details

Process #:	Permit #: B08-101571	Master Permit: B08-101571
Status: CLOSED		
List All Subpermits		

Site Information	
Address: 1404 JACKSON ST **Sub-division:** HOLLYWOOD 1-21 B , **Lot:** 17 **Block:** 89	**Folio#:** 514215026660 **Value:** $25,000.00 **Sq Ft:** 0

Permit Information	
Application Type: ADDITION **Job Name:** **Film Number:**	**Application Date:** 4/7/2008 **Permit Date:** 5/27/2008 **CO/CC Date:** N/A **Total Fees:** $623.75 **Recorded Payments:** $623.75 **Balance:** $0.00

Applicant / Contact Information
Name: KONDOLF,MATHIAS **Address:** 1404 JACKSON ST

Property Owner Information
Name: KONDOLF,MATHIAS **Address:** 1404 JACKSON ST

Contractor Information
Name: **Address:**

Permit Details

Process #:	Permit #: E08-100687	Master Permit: B08-101571
Status: CANCELLED		
Show Master Permit		

Site Information	
Address: 1404 JACKSON ST	Folio#: 514215026660
Sub-division:	Value: $1,000.00
Lot: Block:	Sq Ft: 0

Permit Information	
Application Type: ELECTRICAL WORK Job Name: Film Number:	Application Date: 5/27/2008 Permit Date: 5/27/2008 CO/CC Date: N/A Total Fees: $76.05 Recorded Payments: $76.05 Balance: $0.00

Applicant / Contact Information
Name: JAFE CONTRACTING COMPANY Address: 240 N DIXIE HIGHWAY #19 HOLLYWOOD, FL

Property Owner Information
Name: KONDOLF,MATHIAS Address:

Contractor Information
Name: JAFE CONTRACTING COMPANY (Permits + Details) Address: 240 N DIXIE HIGHWAY #19 HOLLYWOOD, FL

Permit Details

Process #:	Permit #: E08-101678	Master Permit: B08-101571
Status: CLOSED		
Show Master Permit		

Site Information	
Address: 1404 JACKSON ST	Folio#: 514215026660
Sub-division:	Value: $1,800.00
Lot: Block:	Sq Ft: 0

Permit Information	
Application Type: ELECTRICAL WORK Job Name: Film Number:	Application Date: 8/29/2008 Permit Date: 8/29/2008 CO/CC Date: N/A Total Fees: $70.05 Recorded Payments: $70.05 Balance: $0.00

Applicant / Contact Information
Name: J M D INC ELECTRICAL CONTRACT Address: 11471 S W 21 ST MIRAMAR, FL

Property Owner Information
Name: KONDOLF,MATHIAS Address:

Contractor Information
Name: J M D INC ELECTRICAL CONTRACT (Permits + Details) Address: 11471 S W 21 ST MIRAMAR, FL

Permit Details

Process #:	Permit #: M08-100362	Master Permit: B08-101571
Status: CLOSED		
Show Master Permit		

Site Information	
Address: 1404 JACKSON ST	Folio#: 514215026660
Sub-division:	Value: $400.00
Lot: Block:	Sq Ft: 0

Permit Information	
Application Type: A/C WINDOW/WALL UNIT Job Name: Film Number:	Application Date: 6/3/2008 Permit Date: 6/3/2008 CO/CC Date: N/A Total Fees: $45.35 Recorded Payments: $45.35 Balance: $0.00

Applicant / Contact Information
Name: KONDOLF,MATHIAS Address:

Property Owner Information
Name: KONDOLF,MATHIAS Address:

Contractor Information
Name: Address:

wall unit air

CITY OF HOLLYWOOD, FLORIDA
PERMIT APPLICATION

MASTER PROCESS # B08-101571

MASTER PERMIT # _____

Permit Type (Check one): ☐ STRUC, ☐ FIRE, ☐ ELEC, ☑ MECH, ☐ PLUMB, ☐ PAVING, ☐ WTR/SWR, ☐ DRAINAGE

APPLICATION DATE 5-27-08 TAX FOLIO NO. _____

LEGAL DESCRIPTION: _____

JOB NAME M. KONDORF PHONE # _____

JOB ADDRESS 1404 JACKSON ST HOLLYWOOD, BROWARD COUNTY, FL. ZIP 33019

OWNER NAME M. KONDORF

Owners Address 1404 JACKSON ST City HWD State FL Zip 33019

WORK DESCRIPTION WALL UNIT A.C.

USE/OCCUPANCY SINGLE FAM SQ. FT. 350 Value of Proposed Work: $ 400.00

CONTRACTOR'S NAME OWNER PHONE # _____ Fax # _____

CONTRACTOR'S ADDRESS SAME CITY _____ STATE _____ ZIP _____

CONTRACTOR'S CERTIFICATION OR REGISTRATION NUMBER: OWNER EMAIL ADDRESS _____

ARCHITECT/ENGINEER'S NAME ISHMAN PHONE # _____ FAX # _____

ARCHITECT/ENGINEER'S ADDRESS 2123 HWD BLVD CITY _____ STATE _____ ZIP _____

FEE SIMPLE TITLE HOLDER NAME M. KONDORF

Fee Simple Title Holder Address SAME City _____ State _____ Zip _____

BONDING COMPANY NAME _____

Bonding Company Address _____ City _____ State _____ Zip _____

MORTGAGE LENDER'S NAME _____

Mortgage Lender's Address _____ City _____ State _____ Zip _____

Application is hereby made to obtain a permit to do work and installations as indicated. I certify that no work or installation has commenced prior to the issuance of a permit and that all work will be performed to meet the standards of all laws regulating construction in the City of Hollywood, Florida. I understand that a separate permit must be secured for ELECTRICAL WORK, PLUMBING, SIGNS, WELLS, POOLS, FURNACES, BOILERS, HEATERS, TANKS, AIR CONDITIONERS, etc.

OWNER'S AFFIDAVIT: I certify that all the foregoing information is accurate and that all work will be done in compliance with applicable laws regulating construction and zoning.

WARNING TO OWNER: YOUR FAILURE TO RECORD A NOTICE OF COMMENCEMENT MAY RESULT IN YOUR PAYING TWICE FOR IMPROVEMENTS TO YOUR PROPERTY. IF YOU INTEND TO OBATIN FINANCING, CONSULT WITH YOUR LENDER OR AN ATTORNEY BEFORE RECORDING YOUR NOTICE OF COMMENCEMENT.

GERALD A. VARGAS Comm# DD0435098 Expires 5/30/2008 Bonded thru (800) 432-2000 Florida Notary Assn.

Signature Matthew Kondorf Date: 05/30/08
Owner or **Agent

Sworn to (or affirmed) and subscribed before me this 30th day of May, 2008

Signature _____ Gerald A Vargas
NOTARY as to Owner/Agent

Personally Known, ✓ Identification Provided: FL DL.

Signature _____ Date: _____
Prime Contractor

Sworn to (or affirmed) and subscribed before me this _____ day of _____, 20____.

Signature _____
NOTARY as to Contractor

____ Personally Known, ____ I.D. Provided: _____

**** Individuals who sign as the owner's agent must first obtain the owner's authorization to sign on their behalf.**

Application Approved by: _____ **Permit Officer** **Effective Code: 20__ Florida Building Code**

CITY OF HOLLYWOOD, FLORIDA
PERMIT APPLICATION

MASTER PROCESS # _____

MASTER PERMIT # B08 101571

Permit Type (Check one): ☐ STRUC, ☐ FIRE, ☒ ELEC, ☐ MECH, ☐ PLUMB, ☐ PAVING, ☐ WTR/SWR, ☐ DRAINAGE

APPLICATION DATE 8/28/08 TAX FOLIO No. _____

LEGAL DESCRIPTION: _____

JOB NAME KONDOLF PHONE # _____

JOB ADDRESS 1404 JACKSON ST. HOLLYWOOD, BROWARD COUNTY, FL. ZIP _____

OWNER NAME KONDOLF

Owners Address 1404 JACKSON ST City Holly State FL. Zip _____

WORK DESCRIPTION W+AC NEW ADDITION

USE/OCCUPANCY _____ SQ. FT. _____ Value of Proposed Work:$ #1800 ~

CONTRACTOR'S NAME J.M.D INC. PHONE # 954 962 1245 Fax # 954 989 5750

CONTRACTOR'S ADDRESS 6504 SW 24 ST CITY MIRAMAR STATE FL. ZIP 33023

CONTRACTOR'S CERTIFICATION OR REGISTRATION NUMBER: 96 CMG 1542 X EMAIL ADDRESS _____

ARCHITECT/ENGINEER'S NAME _____ PHONE # _____ FAX # _____

ARCHITECT/ENGINEER'S ADDRESS _____ CITY _____ STATE _____ ZIP _____

FEE SIMPLE TITLE HOLDER NAME _____

Fee Simple Title Holder Address _____ City _____ State _____ Zip _____

BONDING COMPANY NAME _____

Bonding Company Address _____ City _____ State _____ Zip _____

MORTGAGE LENDER'S NAME _____

Mortgage Lender's Address _____ City _____ State _____ Zip _____

Application is hereby made to obtain a permit to do work and installations as indicated. I certify that no work or installation has commenced prior to the issuance of a permit and that all work will be performed to meet the standards of all laws regulating construction in the City of Hollywood, Florida. I understand that a separate permit must be secured for ELECTRICAL WORK, PLUMBING, SIGNS, WELLS, POOLS, FURNACES, BOILERS, HEATERS, TANKS, AIR CONDITIONERS, etc.

OWNER'S AFFIDAVIT: I certify that all the foregoing information is accurate and that all work will be done in compliance with applicable laws regulating construction and zoning.

WARNING TO OWNER: YOUR FAILURE TO RECORD A NOTICE OF COMMENCEMENT MAY RESULT IN YOUR PAYING TWICE FOR IMPROVEMENTS TO YOUR PROPERTY. IF YOU INTEND TO OBATIN FINANCING, CONSULT WITH YOUR LENDER OR AN ATTORNEY BEFORE RECORDING YOUR NOTICE OF COMMENCEMENT.

Signature _____ Date: _____
Owner or **Agent

Sworn to (or affirmed) and subscribed before me this _____ day of _____, 20____.

Signature _____
NOTARY as to Owner/Agent

___ Personally Known, ____ Identification Provided: _____

Signature _____ Date: 8/28/08
Prime Contractor

Sworn to (or affirmed) and subscribed before me this 28 day of AUG, 2008

Signature _____
NOTARY as to Contractor

Personally Known, ✓ I.D. Provided: FLDL

**** Individuals who sign as the owner's agent must first obtain the owner's authorization to sign on their behalf.**

Application Approved by: _____ **Permit Officer** **Effective Code: 20__ Florida Building Code**

CITY OF HOLLYWOOD, FLORIDA
PERMIT APPLICATION

MASTER PROCESS # BDS-101571

MASTER PERMIT # _____

Permit Type (Check one): ☐ STRUC, ☐ FIRE, ☒ ELEC, ☐ MECH, ☐ PLUMB, ☐ PAVING, ☐ WTR/SWR, ☐ DRAINAGE

APPLICATION DATE 4/3/08 TAX FOLIO No. _____

LEGAL DESCRIPTION: Hollywood 1-21 B LOT 17 BLK 89

JOB NAME KONDOLF, MATHIAS PHONE # 954-927-0514

JOB ADDRESS 1404 JACKSON ST. HOLLYWOOD, BROWARD COUNTY, FL. ZIP 33020

OWNER NAME KONDOLF, MATHIAS

Owners Address 1404 JACKSON ST. City HOLLYWOOD State FL Zip 33020

WORK DESCRIPTION 315 S/F ADDITION COMMON AREA

USE/OCCUPANCY COMMON AREA (addition) SQ. FT. 315 Value of Proposed Work:$ 25,000

CONTRACTOR'S NAME JAFE Contracting Co PHONE # 954-890-0118 Fax # _____

CONTRACTOR'S ADDRESS 240 N Dixie Hwy #19 CITY Hollywood STATE FL ZIP 33020

CONTRACTOR'S CERTIFICATION OR REGISTRATION NUMBER: OSCITE 1156 6X EMAIL ADDRESS _____

ARCHITECT/ENGINEER'S NAME BOB ISMAN PHONE # 954 929 9669 FAX # _____

ARCHITECT/ENGINEER'S ADDRESS 2117 Hollywood Blvd CITY Hollywood STATE FL. ZIP 33020

FEE SIMPLE TITLE HOLDER NAME SAME

Fee Simple Title Holder Address " City _____ State _____ Zip _____

BONDING COMPANY NAME _____

Bonding Company Address _____ City _____ State _____ Zip _____

MORTGAGE LENDER'S NAME NONE

Mortgage Lender's Address _____ City _____ State _____ Zip _____

Application is hereby made to obtain a permit to do work and installations as indicated. I certify that no work or installation has commenced prior to the issuance of a permit and that all work will be performed to meet the standards of all laws regulating construction in the City of Hollywood, Florida. I understand that a separate permit must be secured for ELECTRICAL WORK, PLUMBING, SIGNS, WELLS, POOLS, FURNACES, BOILERS, HEATERS, TANKS, AIR CONDITIONERS, etc.

OWNER'S AFFIDAVIT: I certify that all the foregoing information is accurate and that all work will be done in compliance with applicable laws regulating construction and zoning.

WARNING TO OWNER: YOUR FAILURE TO RECORD A NOTICE OF COMMENCEMENT MAY RESULT IN YOUR PAYING TWICE FOR IMPROVEMENTS TO YOUR PROPERTY. IF YOU INTEND TO OBATIN FINANCING, CONSULT WITH YOUR LENDER OR AN ATTORNEY BEFORE RECORDING YOUR NOTICE OF COMMENCEMENT.

Signature _____ Date 4/1/08
Owner or **Agent

Sworn to (or affirmed) and subscribed before me this 1 day of April, 20 08

Signature _____
NOTARY as to Owner/Agent

Personally Known, ____ Identification Provided: _____

NOTARY PUBLIC-STATE OF FLORIDA
Everett Butler
Commission # DD680457
Expires: MAY 30, 2011
BONDED THRU ATLANTIC BONDING CO., INC.

Signature _____ Date 4/3/08
Prime Contractor

Sworn to (or affirmed) and subscribed before me this 3 day of April, 20 08

Signature _____
NOTARY as to Contractor

Personally Known, ____ I.D. Provided: _____

NOTARY PUBLIC-STATE OF FLORIDA
Everett Butler
Commission # DD680457
Expires: MAY 30, 2011
BONDED THRU ATLANTIC BONDING CO., INC.

**** Individuals who sign as the owner's agent must first obtain the owner's authorization to sign on their behalf.**

Application Approved by: _____ **Permit Officer** **Effective Code: 20__ Florida Building Code**

CITY OF HOLLYWOOD, FLORIDA
PERMIT APPLICATION

MASTER PROCESS # BD8-10571

MASTER PERMIT # _____

Permit Type (Check one): ☑ STRUC, ☐ FIRE, ☐ ELEC, ☐ MECH, ☐ PLUMB, ☐ PAVING, ☐ WTR/SWR, ☐ DRAINAGE

APPLICATION DATE 4/2-08 TAX FOLIO No. _____

LEGAL DESCRIPTION: Hollywood 1-21 B Lot 17 Blk 89

JOB NAME KONDOLF, MATHIAS PHONE # 954 927 0514

JOB ADDRESS 1404 Jackson St. HOLLYWOOD, BROWARD COUNTY, FL. ZIP 33020

OWNER NAME MATHIAS KONDOLF

Owners Address 1404 Jackson St. City Hollywood State Fl. Zip 33020

WORK DESCRIPTION Com Addn (Addition)

USE/OCCUPANCY SFR SQ. FT. 315 Value of Proposed Work:$ ~~5,000.00~~ 5,000.00

CONTRACTOR'S NAME ALL-FLORIDA ROOFING CO. PHONE # 981-1278 Fax # _____

CONTRACTOR'S ADDRESS 6631 S W 26th Court CITY _____ STATE _____ ZIP _____
Miramar Florida 33023

CONTRACTOR'S CERTIFICATION OR REGISTRATION NUMBER: CCC-058291 EMAIL ADDRESS _____

ARCHITECT/ENGINEER'S NAME Bob Isman PHONE # 954 850-2009 FAX # -

ARCHITECT/ENGINEER'S ADDRESS 2117 Hollywood Blvd CITY Holl. STATE Fl ZIP 33020

FEE SIMPLE TITLE HOLDER NAME SAME

Fee Simple Title Holder Address SAME City _____ State _____ Zip _____

BONDING COMPANY NAME N/A

Bonding Company Address None City _____ State _____ Zip _____

MORTGAGE LENDER'S NAME N/A

Mortgage Lender's Address N/A City _____ State _____ Zip _____

Application is hereby made to obtain a permit to do work and installations as indicated. I certify that no work or installation has commenced prior to the issuance of a permit and that all work will be performed to meet the standards of all laws regulating construction in the City of Hollywood, Florida. I understand that a separate permit must be secured for ELECTRICAL WORK, PLUMBING, SIGNS, WELLS, POOLS, FURNACES, BOILERS, HEATERS, TANKS, AIR CONDITIONERS, etc.

OWNER'S AFFIDAVIT: I certify that all the foregoing information is accurate and that all work will be done in compliance with applicable laws regulating construction and zoning.

WARNING TO OWNER: YOUR FAILURE TO RECORD A NOTICE OF COMMENCEMENT MAY RESULT IN YOUR PAYING TWICE FOR IMPROVEMENTS TO YOUR PROPERTY. IF YOU INTEND TO OBATIN FINANCING, CONSULT WITH YOUR LENDER OR AN ATTORNEY BEFORE RECORDING YOUR NOTICE OF COMMENCEMENT.

Signature _____ Date: 4/1/08
Owner or **Agent

Sworn to (or affirmed) and subscribed before me this 4/1/08, 20 08.

NOTARY PUBLIC-STATE OF FLORIDA
Everett Butler
Commission # DD680457
Expires: MAY 30, 2011
BONDED THRU ATLANTIC BONDING CO., INC.

Signature _____
NOTARY as to Owner/Agent

X Personally Known, ____ Identification Provided: _____

Signature _____ Date: 4-1-08
Prime Contractor

Sworn to (or affirmed) and subscribed before me this 1st day of April 08.

NOTARY PUBLIC-STATE OF FLORIDA
Everett Butler
Commission # DD680457
Expires: MAY 30, 2011
BONDED THRU ATLANTIC BONDING CO., INC.

Signature _____
NOTARY as to Contractor

X Personally Known, ____ I.D. Provided: _____

**** Individuals who sign as the owner's agent must first obtain the owner's authorization to sign on their behalf.**

Application Approved by: _____ **Permit Officer** **Effective Code: 20__ Florida Building Code**

CITY OF HOLLYWOOD, FLORIDA
PERMIT APPLICATION

MASTER PROCESS # BDS-T01571

MASTER PERMIT # _____

Permit Type (Check one): ☒ STRUC, ☐ FIRE, ☐ ELEC, ☐ MECH, ☐ PLUMB, ☐ PAVING, ☐ WTR/SWR, ☐ DRAINAGE

APPLICATION DATE 4-1-08 TAX FOLIO No. 5142 15 02 C660

LEGAL DESCRIPTION: HWD-1-21-B-LOT-17-BLK89

JOB NAME KONDOLF MATHIAS PHONE # 954 927 0514

JOB ADDRESS 1404 JACKSON ST HOLLYWOOD, BROWARD COUNTY, FL. ZIP 33020

OWNER NAME KONDOLF MATHIAS

Owners Address 1404 JACKSON ST. City HWD. State FL Zip 33020

WORK DESCRIPTION 315 # ADDITIONAL - COMMON AREA

USE/OCCUPANCY COMMON AREA SQ. FT. 315 Value of Proposed Work: $ 25000

CONTRACTOR'S NAME OWNER PHONE # _____ Fax # _____

CONTRACTOR'S ADDRESS 1404 JACKSON ST CITY HWD STATE FL ZIP 33020

CONTRACTOR'S CERTIFICATION OR REGISTRATION NUMBER: _____ EMAIL ADDRESS _____

ARCHITECT/ENGINEER'S NAME BOB ISHMAN PHONE # 954 929 9695 FAX #

ARCHITECT/ENGINEER'S ADDRESS 2117 HOLLYWD BVD CITY HWD STATE FL ZIP 33020

FEE SIMPLE TITLE HOLDER NAME SAME

Fee Simple Title Holder Address " City _____ State _____ Zip _____

BONDING COMPANY NAME _____

Bonding Company Address _____ City _____ State _____ Zip _____

MORTGAGE LENDER'S NAME NONE

Mortgage Lender's Address _____ City _____ State _____ Zip _____

Application is hereby made to obtain a permit to do work and installations as indicated. I certify that no work or installation has commenced prior to the issuance of a permit and that all work will be performed to meet the standards of all laws regulating construction in the City of Hollywood, Florida. I understand that a separate permit must be secured for ELECTRICAL WORK, PLUMBING, SIGNS, WELLS, POOLS, FURNACES, BOILERS, HEATERS, TANKS, AIR CONDITIONERS, etc.

OWNER'S AFFIDAVIT: I certify that all the foregoing information is accurate and that all work will be done in compliance with applicable laws regulating construction and zoning.

WARNING TO OWNER: YOUR FAILURE TO RECORD A NOTICE OF COMMENCEMENT MAY RESULT IN YOUR PAYING TWICE FOR IMPROVEMENTS TO YOUR PROPERTY. IF YOU INTEND TO OBATIN FINANCING, CONSULT WITH YOUR LENDER OR AN ATTORNEY BEFORE RECORDING YOUR NOTICE OF COMMENCEMENT.

Signature [signature] Date: 4/1/08
Owner or Agent

Sworn to (or affirmed) and subscribed before me this 4/1/08 day of _____, 20 ____.

NOTARY PUBLIC-STATE OF FLORIDA
Everett Butler
Commission # DD680457
Expires: MAY 30, 2011
BONDED THRU ATLANTIC BONDING CO., INC.

Signature [signature]
NOTARY as to Owner/Agent

X Personally Known, ____ Identification Provided: _____

Signature _____ Date: _____
Prime Contractor

Sworn to (or affirmed) and subscribed before me this _____ day of _____, 20 ____.

Signature _____
NOTARY as to Contractor

____ Personally Known, ____ I.D. Provided: _____

**** Individuals who sign as the owner's agent must first obtain the owner's authorization to sign on their behalf.**

Application Approved by: _____ **Permit Officer** **Effective Code: 20__ Florida Building Code**

DISCLOSURE STATEMENT

State law requires construction to be done by licensed contractors.

You have applied for a permit under an exemption to that law. The exemption allows you, as the owner of your property, to act as your own contractor with certain restrictions even though you do not have a license. You must provide direct, on-site supervision of the construction yourself. You may build or improve a one-family or two-family residence or a farm outbuilding. You may also build or improve a commercial building, provided your costs do not exceed $75,000. The building or residence must be for your own use or occupancy. It may not be built or substantially improved for sale or lease. If you sell or lease a building you have built or substantially improved yourself within 1 year after the construction is complete, the law will presume that you built or substantially improved it for sale or lease, which is a violation of this exemption. You may not hire an unlicensed person to act as your contractor or to supervise people working on your building. It is your responsibility to make sure that people employed by you have licenses required by state law and by county or municipal licensing ordinances. You may not delegate the responsibility for supervising work to a licensed contractor who is not licensed to perform the work being done. Any person working on your building who is not licensed must work under your direct supervision and must be employed by you, which means that you must deduct F.I.C.A. and withholding tax and provide workersí compensation for that employee, all as prescribed by law. Your construction must comply with all applicable laws, ordinances, building codes, and zoning regulations.

Reference Florida Statue 489.103(7)

Owner Signature Date

Note: Properties held in corporate ownership are not included within this exemption and must obtain permits through licensed contractors.

17-101 (02/06)

Permit # B08-10157 Folio # _____

INSTR # 107934940
OR BK 45424 Pages 826 - 826
RECORDED 06/05/08 12:14:13
BROWARD COUNTY COMMISSION
DEPUTY CLERK 2160
#1, 1 Pages

NOTICE OF COMMENCEMENT

The undersigned hereby gives notice that improvement will be made to certain real property and in accordance with Chapter 713, Florida Statutes, the following information is provided in this Notice of Commencement :

(the space reserved for recorder)

1. **Legal Description of Property:** Lot 17 Block 81 Unit # ___ Bldg # ___ Lengthy legal attached
   Subdivision / Condominium: HOLLYWOOD 1-21 B
   Street Address if available: 1409 JACKSON ST
2. **General description of improvement :** SIDING
3. a. **Owner name and address:** MATHIAS KONDOLF
   b. **Interest in property:** FEE SIMPLE 1409 JACKSON ST
   c. **Name and address of fee simple titleholder (if other than Owner):** SAME HOLLYWOOD FL 33019
4. a. **Contractor name and address:** OWNER
   b. **Contractor's phone number:** 954 922 0514
5. a. **Surety name and address:** _____
   b. **Surety's phone number:** _____
   c. **Amount of bond:** $ _____
6. a. **Lender name and address:** _____
   b. **Lender's phone number:** _____
7. a. **Persons within the State of Florida designated by Owner upon whom notices or other documents may be served as provided by Section 713.13(1)(a)7., Florida Statutes:**
   Name: JOE HARTIGAN
   Address: 1500 SW 131 WAY
   b. **Phone number:** PEMBROKE PINES FL 33027
8. a. **In addition to himself or herself, the Owner designates** _____ **to receive a copy of Lienor's Notice per Section 713.13(1)(b), Florida**
   b. **Phone number of person or entity designated by owner** 954 812 7357
9. **Expiration date of notice of commencement :** _____
   (the expiration date is 1 year from the date of recording unless a different date is specified)

WARNING TO OWNER: ANY PAYMENTS MADE BY THE OWNER AFTER THE EXPIRATION OF THE NOTICE OF COMMENCEMENT ARE CONSIDERED IMPROPER PAYMENTS UNDER CHAPTER 713, PART I, SECTION 713.13, FLORIDA STATUTES, AND CAN RESULT IN YOUR PAYING TWICE FOR IMPROVEMENTS TO YOUR PROPERTY. A NOTICE OF COMMENCEMENT MUST BE RECORDED AND POSTED ON THE JOB SITE BEFORE THE FIRST INSPECTION. IF YOU INTEND TO OBTAIN FINANCING, CONSULT WITH YOUR LENDER OR AN ATTORNEY BEFORE COMMENCING WORK OR RECORDING YOUR NOTICE OF COMMENCEMENT.

Signature(s) of Owner(s) or Owner(s)' Authorized Officer/Director/Partner/Manager

By Mathias Kondolf
Print Name Mathias Kondolf
Title/Office Owner

By _____
Print Name _____
Title/Office _____

STATE OF FLORIDA
COUNTY OF BROWARD

The foregoing instrument was acknowledged before me this 04 day of June, 2008.
By Mathias R. Kondolf
☐ Individually, or ☐ as _____ for _____
☐ Personally known, or ☐ produced the following type of identification: Florida Drivers License

GERALD A. VARGAS
Comm# DD0435088
Expires 8/30/2009
Bonded thru (800)432-4254
Florida Notary Assn., Inc

Signature of Notary Public: Gerald A Vargas
Print Name: _____
(SEAL)

VERIFICATION PURSUANT TO SECTION 92.525, FLORIDA STATUTES

Under penalties of perjury, I declare that I have read the foregoing and that the facts stated in it are true, to the best of my knowledge and belief.

Signature(s) of Owner(s) or Owner(s)' Authorized Officer/Director/Partner/Manager who signed above:

By Mathias Kondolf

By _____

Florida Building Code Edition 2004

High-Velocity Hurricane Zone Uniform Permit Application Form.

Section A (General Information)

Master Permit No. B08-10571 Process No. _____

Contractor's Name ALL-FLORIDA ROOFING Co.

Job Address _____

ROOF CATEGORY

- ☐ Low Slope
- ☐ Mechanically Fastened Tile
- ☐ Mortar/Adhesive Set Tile
- ☐ Asphaltic Shingles
- ☐ Metal Panel/Shingles
- ☐ Wood Shingles/Shakes
- ☑ Prescriptive BUR-RAS 150

ROOF TYPE

- ☑ New Roof
- ☐ Reroofing
- ☐ Recovering
- ☐ Repair
- ☐ Maintenance

ROOF SYSTEM INFORMATION

Low Slope Roof Area (SF)	Steep Sloped Roof Area (SF)	Total (SF)
460 FT²	—	460 FT²

Section B (Roof Plan)

Sketch Roof Plan: Illustrate all levels and sections, roof drains, scuppers, overflow scuppers and overflow drains. Include dimensions of sections and levels, clearly identify dimensions of elevated pressure zones and location of parapets.

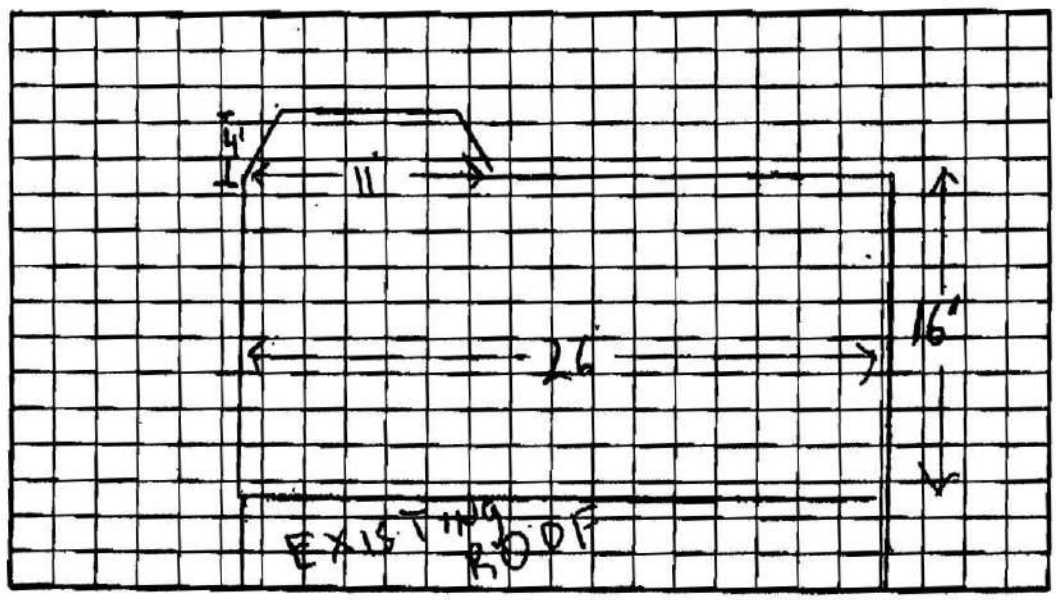

ROBERT G. ISHMAN P.A.
A R C H I T E C T

TRANSMITTAL SEPT. 16, 2008

TO; CITY of HOLLYWOOD – BUILDING DEPT.

C/O; BUILDING OFFICIAL

Ref; PROPOSED ADDITION to RESIDENCE and TRELLACE PATIO
1404 JACKSON ST.
HOLLYWOOD, FLORIDA 33020

Item; REVISIONS to PLANS- ARCHITECTS PROJECT - No. 2709

DEAR BUILDING OFFICIAL;
PLEASE ACCEPT THE FOLLOWING AS REVISIONS TO PERMITTED PLANS.

TRELLACE AREA OPEN WOOD JOISTS:
(NO UPLIFT- OPEN JOISTS)

REVISION- JOIST TO BEAM CONNECTION
"USP" TIE- "RT7 " 18ga, (5) 8d Nails to HEADER, (5) 8d Nails to JOIST
LOCATION- EACH SIDE of JOISTS

- "SIMPSON" HANGER- "LUS36 " 18ga., (4) 16d Nail – HEADER ,
(4) 16d Nail -JOIST

Sincerely, ROBERT ISHMAN
9/16/08

APPROVED
SEP 26 2008
CITY OF HOLLYWOOD, FLA.
STRUCTURAL

FIELD COPY

LICENSE NO. AR-0012684 / AA-C001769
2117 HOLLYWOOD BLVD., HOLLYWOOD, FLORIDA 33020
TEL; (954) 929-9695 / FAX; (954) 929-9597

Accurate
PEST CONTROL, INC.

CONFIRMATION OF COMPLETION OF SUBTERRANEAN TERMITE TREATMENT

AS REQUIRED BY FLORIDA BUILDING CODE (FBC) 1816.1.7

Purchaser's Name and Address: Joe Hartigan Builders, Inc.
1500 SW 131st Way
Pembroke Pines, Fl 33027

Treatment Site: 1404 Jackson Street Hollywood, Fl 33020

Project: Residence Addition

Permit No.: B08101571

Chemical: Cypermethrin

Product: Demon MAX @ 0.25%

Square Footage: 320

Number of Gallons: 32

Number of structures treated: 1

Lot & Block: N/A

Date of Completion: 10/31/08

Technicians Name: Breck Bishop

Date & Time: 10/31/08, 9:00AM

Accurate Pest Control, Inc. hereby confirms that this building has received a complete treatment for the prevention of subterranean termites. Treatment is in accordance with the rules and laws as established by Florida Department of Agriculture and Consumer Services. Exterior perimeter treatment was completed upon final grade.

Guarantee None ☑

1 Year ☐

5 Years ☐

Renewal Yes ☐

No ☑

LICENSE NO. JB 1752
ACCURATE PEST CONTROL, INC.
BY: _____
Harvey Smades, President
Revised on 06/01/08

OCT 31 2008

300 S. STATE ROAD 7 • PLANTATION, FLORIDA 33317 • 954-584-8588 • 1-800-749-8588 • FAX: 954-584-6117

Accurate
PEST CONTROL, INC.

License # JB 1752

Certificate of Compliance for Termite Protection
(as required by Florida Building Code (FBC) 1816.1.7)

Joe Hartigan Builders, Inc.
(954) 812-7357

1404 Jackson Street Hollywood, Fl 33020
Residence Addition
Permit #: B08101571
Method of Termite Treatment Prevention Treatment- soil barrier, wood treatment, bait system, other (describe)

The building has received a complete treatment for the prevention of subterranean termites.
Treatment is in accordance with rules and laws established by the Florida Department of Agriculture and Consumer Services.

Authorized Signature

300 S. STATE ROAD 7 • PLANTATION, FLORIDA 33317 • 954-584-8588 • 1-800-749-8588 • FAX: 954-584-6117

U.S. DEPARTMENT OF HOMELAND SECURITY
Federal Emergency Management Agency
National Flood Insurance Program

ELEVATION CERTIFICATE

OMB No. 1660-0008
Expires February 28, 2009

Important: Read the instructions on pages 1-8.

SECTION A - PROPERTY INFORMATION

	For Insurance Company Use:
A1. Building Owner's Name MATHIAS KONDOLF	Policy Number
A2. Building Street Address (including Apt., Unit, Suite, and/or Bldg. No.) or P.O. Route and Box No. 1404 JACKSON ST City HOLLYWOOD State FL ZIP Code 33020	Company NAIC Number

A3. Property Description (Lot and Block Numbers, Tax Parcel Number, Legal Description, etc.)
LOT 17 AND EAST 1/2 OF LOT 18, BLOCK 89 OF HOLLYWOOD, PLAT BOOK 1, PG 21, B.C.R., APN #: 51-42-15-02-6660

A4. Building Use (e.g., Residential, Non-Residential, Addition, Accessory, etc.) RESIDENTIAL
A5. Latitude/Longitude: Lat. 26°00'32.4" Long. 80°08'06.6" Horizontal Datum: ☐ NAD 1927 ☒ NAD 1983
A6. Attach at least 2 photographs of the building if the Certificate is being used to obtain flood insurance.
A7. Building Diagram Number 1
A8. For a building with a crawl space or enclosure(s), provide
a) Square footage of crawl space or enclosure(s) 0 sq ft
b) No. of permanent flood openings in the crawl space or enclosure(s) walls within 1.0 foot above adjacent grade 0
c) Total net area of flood openings in A8.b 0 sq in
A9. For a building with an attached garage, provide:
a) Square footage of attached garage 0 sq ft
b) No. of permanent flood openings in the attached garage walls within 1.0 foot above adjacent grade 0
c) Total net area of flood openings in A9.b 0 sq in

SECTION B - FLOOD INSURANCE RATE MAP (FIRM) INFORMATION

B1. NFIP Community Name & Community Number	B2. County Name	B3. State
HOLLYWOOD 125113	BROWARD	FL

B4. Map/Panel Number	B5. Suffix	B6. FIRM Index Date	B7. FIRM Panel Effective/Revised Date	B8. Flood Zone(s)	B9. Base Flood Elevation(s) (Zone AO, use base flood depth)
12011C0317	G	10/2/97	7/21/95	AE	8'

B10. Indicate the source of the Base Flood Elevation (BFE) data or base flood depth entered in Item B9.
☐ FIS Profile ☒ FIRM ☐ Community Determined ☐ Other (Describe) ____
B11. Indicate elevation datum used for BFE in Item B9: ☒ NGVD 1929 ☐ NAVD 1988 ☐ Other (Describe) ____
B12. Is the building located in a Coastal Barrier Resources System (CBRS) area or Otherwise Protected Area (OPA)? ☐ Yes ☒ No
Designation Date ____ ☐ CBRS ☐ OPA

SECTION C - BUILDING ELEVATION INFORMATION (SURVEY REQUIRED)

C1. Building elevations are based on: ☐ Construction Drawings* ☒ Building Under Construction* ☒ Finished Construction
*A new Elevation Certificate will be required when construction of the building is complete.
C2. Elevations – Zones A1-A30, AE, AH, A (with BFE), VE, V1-V30, V (with BFE), AR, AR/A, AR/AE, AR/A1-A30, AR/AH, AR/AO. Complete Items C2.a-g below according to the building diagram specified in Item A7.
Benchmark Utilized COUNTY Vertical Datum NGVD
Conversion/Comments ____

			Check the measurement used.
a)	Top of bottom floor (including basement, crawl space, or enclosure floor)	5.09	☒ feet ☐ meters (Puerto Rico only)
b)	Top of the next higher floor	N/A	☐ feet ☐ meters (Puerto Rico only)
c)	Bottom of the lowest horizontal structural member (V Zones only)	N/A	☐ feet ☐ meters (Puerto Rico only)
d)	Attached garage (top of slab)	N/A	☒ feet ☐ meters (Puerto Rico only)
e)	Lowest elevation of machinery or equipment servicing the building (Describe type of equipment in Comments)	N/A	☒ feet ☐ meters (Puerto Rico only)
f)	Lowest adjacent (finished) grade (LAG)	4.7	☒ feet ☐ meters (Puerto Rico only)
g)	Highest adjacent (finished) grade (HAG)	4.9	☒ feet ☐ meters (Puerto Rico only)

SECTION D - SURVEYOR, ENGINEER, OR ARCHITECT CERTIFICATION

This certification is to be signed and sealed by a land surveyor, engineer, or architect authorized by law to certify elevation information. *I certify that the information on this Certificate represents my best efforts to interpret the data available. I understand that any false statement may be punishable by fine or imprisonment under 18 U.S. Code, Section 1001.*

☒ Check here if comments are provided on back of form.

3869
PLACE SEAL HERE
Robert L. Thompson
7-11-8

Certifier's Name ROBERT L.THOMPSON License Number 3869
Title PROFESSIONAL LAND SURVEYOR Company Name ACCURATE LAND SURVEYORS
Address 1150 E ATLANTIC BLVD City POMPANO BEACH State FL ZIP Code 33060
Signature Robert L Thompson Date 7/9/08 Telephone 954-782-1441

IMPORTANT: In these spaces, copy the corresponding information from Section A.	For Insurance Company Use:
Building Street Address (including Apt., Unit, Suite, and/or Bldg. No.) or P.O. Route and Box No. 1404 JACKSON ST	Policy Number
City HOLLYWOOD State FL ZIP Code 33020	Company NAIC Number

SECTION D - SURVEYOR, ENGINEER, OR ARCHITECT CERTIFICATION (CONTINUED)

Copy both sides of this Elevation Certificate for (1) community official, (2) insurance agent/company, and (3) building owner.

Comments JOB NO. 01-4278C;

Robert L Thompson

Signature ROBERT L. THOMPSON Date

☐ Check here if attachmen

SECTION E - BUILDING ELEVATION INFORMATION (SURVEY NOT REQUIRED) FOR ZONE AO AND ZONE A (WITHOUT BFE)

For Zones AO and A (without BFE), complete Items E1-E5. If the Certificate is intended to support a LOMA or LOMR-F request, complete Sections A, B, and C. For Items E1-E4, use natural grade, if available. Check the measurement used. In Puerto Rico only, enter meters.

E1. Provide elevation information for the following and check the appropriate boxes to show whether the elevation is above or below the highest adjacent grade (HAG) and the lowest adjacent grade (LAG).
a) Top of bottom floor (including basement, crawl space, or enclosure) is _____.____ ☐ feet ☐ meters ☐ above or ☐ below the HAG.
b) Top of bottom floor (including basement, crawl space, or enclosure) is _____.____ ☐ feet ☐ meters ☐ above or ☐ below the LAG.

E2. For Building Diagrams 6-8 with permanent flood openings provided in Section A Items 8 and/or 9 (see page 8 of Instructions), the next higher floor (elevation C2.b in the diagrams) of the building is _____.____ ☐ feet ☐ meters ☐ above or ☐ below the HAG.

E3. Attached garage (top of slab) is _____.____ ☐ feet ☐ meters ☐ above or ☐ below the HAG.

E4. Top of platform of machinery and/or equipment servicing the building is _____.____ ☐ feet ☐ meters ☐ above or ☐ below the HAG.

E5. Zone AO only: If no flood depth number is available, is the top of the bottom floor elevated in accordance with the community's floodplain management ordinance? ☐ Yes ☐ No ☐ Unknown. The local official must certify this information in Section G.

SECTION F - PROPERTY OWNER (OR OWNER'S REPRESENTATIVE) CERTIFICATION

The property owner or owner's authorized representative who completes Sections A, B, and E for Zone A (without a FEMA-issued or community-issued BFE) or Zone AO must sign here. *The statements in Sections A, B, and E are correct to the best of my knowledge.*

Property Owner's or Owner's Authorized Representative's Name
ROBERT L. THOMPSON LICENSE NO. 3869

Address 1150 E ATLANTIC BLVD City POMPANO BEACH State FL ZIP Code 33060

Signature Date Telephone 954-782-1441

Comments

☐ Check here if attachments

SECTION G - COMMUNITY INFORMATION (OPTIONAL)

The local official who is authorized by law or ordinance to administer the community's floodplain management ordinance can complete Sections A, B, C (or E), and G of this Elevation Certificate. Complete the applicable item(s) and sign below. Check the measurement used in Items G8. and G9.

G1. ☒ The information in Section C was taken from other documentation that has been signed and sealed by a licensed surveyor, engineer, or architect who is authorized by law to certify elevation information. (Indicate the source and date of the elevation data in the Comments area below.)

G2. ☐ A community official completed Section E for a building located in Zone A (without a FEMA-issued or community-issued BFE) or Zone AO.

G3. ☐ The following information (Items G4.-G9.) is provided for community floodplain management purposes.

G4. Permit Number	G5. Date Permit Issued	G6. Date Certificate Of Compliance/Occupancy Issued
B08-101571	5-27-2008	

G7. This permit has been issued for: ☐ New Construction ☐ Substantial Improvement

G8. Elevation of as-built lowest floor (including basement) of the building: 4.97 ☒ feet ☐ meters (PR) Datum NGVD

G9. BFE or (in Zone AO) depth of flooding at the building site: 8.0 ☒ feet ☐ meters (PR) Datum NGVD

Local Official's Name ROBERT L. THOMPSON Title PRESIDENT

Community Name HOLLYWOOD Telephone (954) 782-1441

Signature Date 7/9/08

Comments

☒ Check here if attachments

Building Photographs

See Instructions for Item A6.

	For Insurance Company Use:
Building Street Address (including Apt., Unit, Suite, and/or Bldg. No.) or P.O. Route and Box No. 1404 JACKSON ST	Policy Number
City HOLLYWOOD State FL ZIP Code 33020	Company NAIC Number

If using the Elevation Certificate to obtain NFIP flood insurance, affix at least two building photographs below according to the instructions for Item A6. Identify all photographs with: date taken; "Front View" and "Rear View"; and, if required, "Right Side View" and "Left Side View." If submitting more photographs than will fit on this page, use the Continuation Page, following.

CONSTRUCTION SITE PICTURES TAKEN 07/09/08





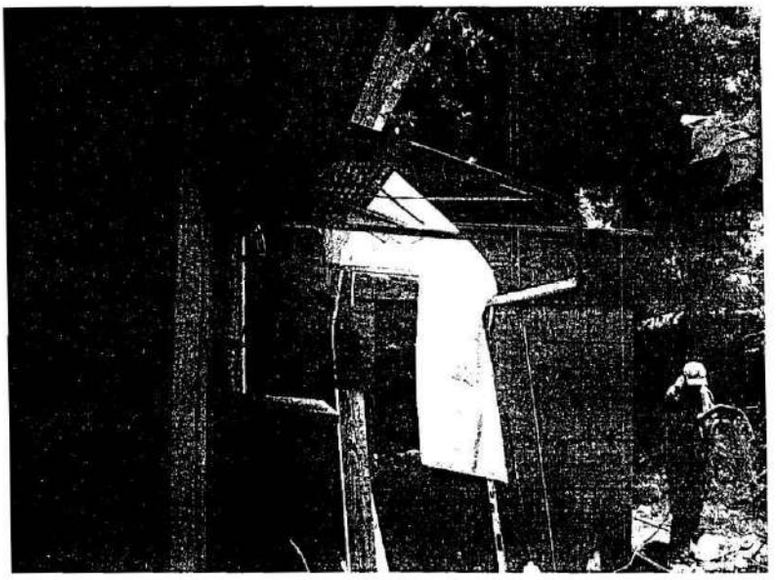

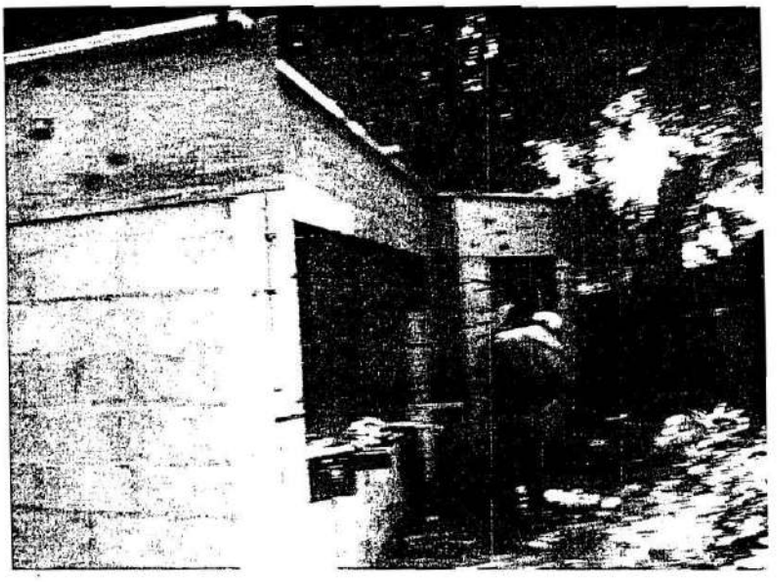







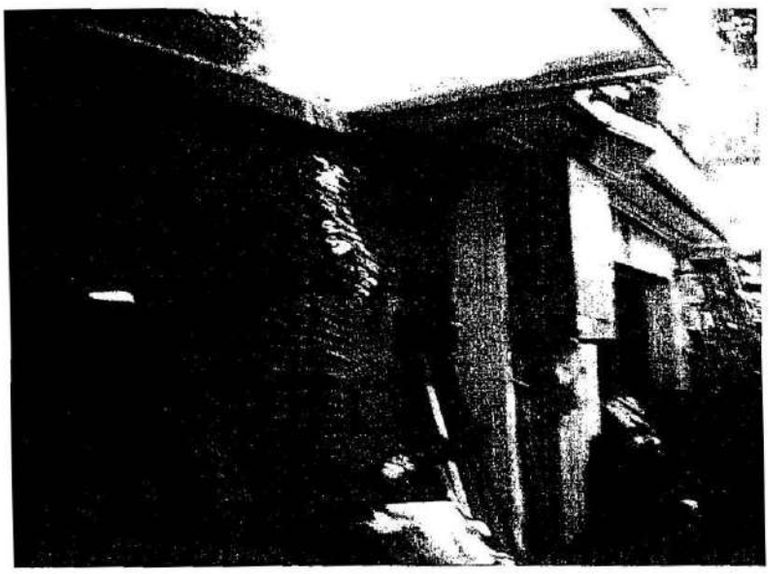

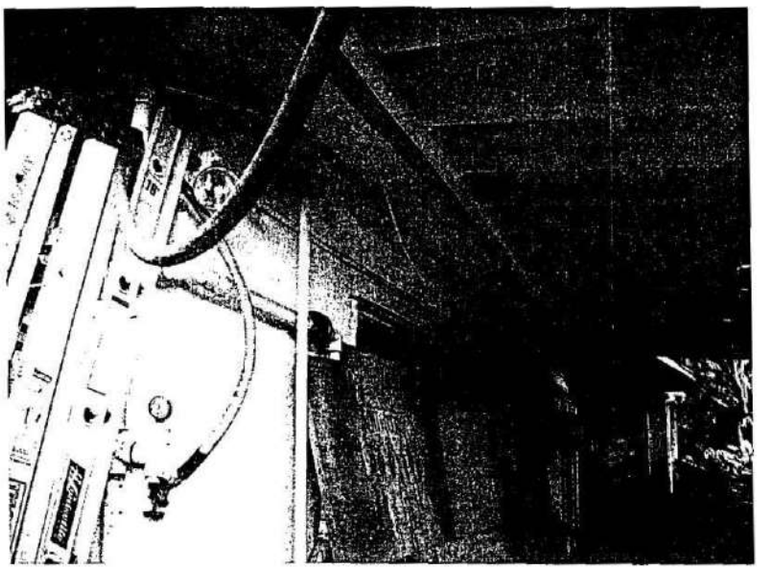

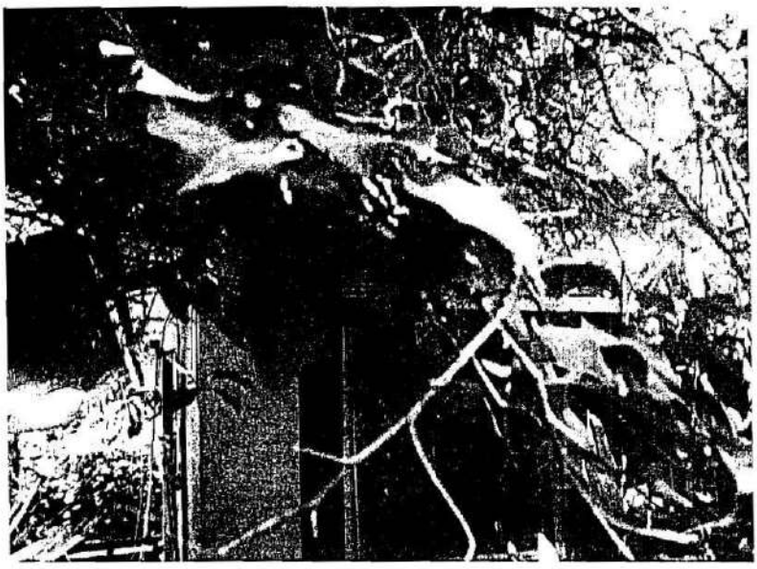

7150 E. ATLANTIC BLVD.
POMPANO BEACH
FLORIDA 33060

ACCURATE LAND SURVEYORS, INC.
L.B. #3635

TEL. (954) 782-1441
FAX. (954) 782-1442

TYPE OF SURVEY: **BOUNDARY**
REF 01-4278C

JOB NUMBER: SU-08-1787

LEGAL DESCRIPTION:
LOT 17 AND EAST 1/2 OF LOT 18, BLOCK 89 OF HOLLYWOOD, ACCORDING TO THE PLAT THEREOF, AS RECORDED IN PLAT BOOK 1, PAGE 21, OF THE PUBLIC RECORDS OF BROWARD COUNTY, FLORIDA.

ADDRESS: **1404 JACKSON ST HOLLYWOOD, FL 33020**

FLOOD ZONE: **AE**
BASE FLOOD ELEVATION: **8' NGVD**
CONTROL PANEL NUMBER: **125113-0317-G**
EFFECTIVE: **REVISED: 10/2/1997**

LOWEST FLOOR ELEVATION: **5.09' NGVD**
GARAGE FLOOR ELEVATION: **N/A**
LOWEST ADJACENT GRADE : **4.7' NGVD**
HIGHEST ADJACENT GRADE : **4.9' NGVD**

REFERENCE BENCH MARK: **CITY OF HOLLYWOOD BM PG. 16 PK NAIL 5' N. C/L S. 14TH AVE. & JACKSON ST.**

CERTIFY TO:

1. MATHIAS KONDOLF
2.
3.
4.
5.
6.

EASEMENTS ACCORDING TO THE PLAT THEREOF:
NONE

ENCROACHMENTS ACCORDING TO THE PLAT THEREOF:
CONCRETE DRIVEWAYS ENCROACHES INTO RIGHT OF WAYS ALONG NORTH & SOUTH BOUNDARIES.

NOTES:

1. THIS SURVEY CONSISTS OF A MAP AND A TEXT REPORT. ONE IS NOT VALID WITHOUT THE OTHER.
2. OWNERSHIP OF FENCES AND WALLS IF ANY, NOT DETERMINED.
3. THIS SURVEY IS MADE FOR THE EXCLUSIVE USE OF THE CERTIFIED HEREON. TO BE VALID ONE YEAR FROM THE DATE OF SURVEY AS SHOWN AS UPDATED 04-15-08.

SEAL
NOT VALID WITHOUT THE SIGNATURE AND THE ORIGINAL RAISED SEAL OF A FLORIDA LICENSED SURVEYOR AND MAPPER.

LEGEND OF ABBREVIATIONS:

Δ	=	CENTRAL ANGLE	+7.00						ENCH.	=	ENCH.
A	=	ARC LENGTH							(M)	=	MEASURED
CB	=	CHORD BEARING		=	ELEVATIONS BASED ON N.G.V.D.	MAINT.	=	MAINTENANCE	LP	=	LIGHT POLE.
R	=	RADIUS	SQ. FT.	=	SQUARE FEET	B.C.R.	=	BROWARD COUNTY RECORDS	CONC.	=	CONCRETE
R/W	=	RIGHT OF WAY	P.C.P.	=	PERMANENT CONTROL POINT	D.C.R.	=	DADE COUNTY RECORDS	D.B.	=	DEED BOOK
P.C.	=	POINT OF CURVATURE	P.B.C.R.	=	PALM BEACH COUNTY RECORDS	P.B.	=	PLAT BOOK	CLF	=	CHAIN LINK FENCE
P.T.	=	POINT OF TANGENCY	P	=	PLAT	O.R.B.	=	OFFICIAL RECORDS BOOK	BLVD.	=	BOULEVARD
WM	=	WATER METER	N&D	=	NAIL & DISC	F.F.	=	FINISHED FLOOR	AD	=	ASSUMED DATUM
OH	=	OVERHANG	P.O.C.	=	POINT OF COMMENCEMENT	GAR.	=	GARAGE	I.P.	=	IRON PIPE
N	=	NORTH	P.O.B.	=	POINT OF BEGINNING	ELEC.	=	ELECTRIC	I.R.	=	IRON ROD
S	=	SOUTH	A/C	=	AIR CONDITIONER	SEC.	=	SECTION	P.R.M.	=	PERMANENT REFERENCE MONUMENT
E	=	EAST	FND.	=	FOUND	TWP.	=	TOWNSHIP	N.G.V.D.	=	NATIONAL GEODETIC VERTICAL DATUM
W	=	WEST	CHATT.	=	CHATTAHOOCHEE	RGE.	=	RANGE	U.E.	=	UTILITY EASEMENT
B.M.	=	BENCHMARK	STA.	=	STATION	C/L	=	CENTERLINE	D.E.	=	DRAINAGE EASEMENT
FH	=	FIRE HYDRANT	F.P.L.	=	FLORIDA POWER & LIGHT	MH	=	MANHOLE	A.E.	=	ANCHOR EASEMENT
o/s	=	OFFSET	ELEV.	=	ELEVATION	ESMT.	=	EASEMENT			

ROBERT G. ISHMAN P.A.
A R C H I T E C T

TRANSMITTAL SEPT. 16, 2008

TO; CITY of HOLLYWOOD – BUILDING DEPT.

C/O; BUILDING OFFICIAL

Ref; PROPOSED ADDITION to RESIDENCE and TRELLACE PATIO
1404 JACKSON ST.
HOLLYWOOD, FLORIDA 33020

Item; REVISIONS to PLANS- ARCHITECTS PROJECT - No. 2709

DEAR BUILDING OFFICIAL;
PLEASE ACCEPT THE FOLLOWING AS REVISIONS TO PERMITTED PLANS.

TRELLACE AREA OPEN WOOD JOISTS;
(NO UPLIFT- OPEN JOISTS)

REVISION- JOIST TO BEAM CONNECTION
"USP" TIE- "RT7 " 18ga. (5) 8d Nails to HEADER, (5) 8d Nails to JOIST
LOCATION- EACH SIDE of JOISTS

- "SIMPSON" HANGER- "LUS36 " 18ga., (4) 16d Nail – HEADER ,
(4) 16d Nail-JOIST

Sincerely, ROBERT ISHMAN
9/16/08

APPROVED
SEP 26 2008
CITY OF HOLLYWOOD, FLA.
STRUCTURAL

LICENSE NO. AR-0012684 / AA-C001769
2117 HOLLYWOOD BLVD., HOLLYWOOD, FLORIDA 33020
TEL; (954) 929-9695 / FAX; (954) 929-9597

ROBERT G. ISHMAN P.A.
A R C H I T E C T

TRANSMITTAL SEPT. 6, 2008

TO; CITY of HOLLYWOOD – BUILDING DEPT.

C/O; BUILDING OFFICIAL

Ref; PROPOSED ADDITION to RESIDENCE and TRELLACE PATIO
1404 JACKSON ST.
HOLLYWOOD, FLORIDA 33020

Item; REVISIONS to PLANS- ARCHITECTS PROJECT - No. 2709

DEAR BUILDING OFFICIAL;
PLEASE ACCEPT THE FOLLOWING AS REVISIONS TO PERMITTED PLANS.

TRELLACE AREA OPEN WOOD JOISTS:
(NO UPLIFT- OPEN JOISTS)

REVISION- JOIST TO BEAM CONNECTION
"USP" TIE- "RT7" 18ga, (5) 8d Nails to HEADER, (5) 8d Nails to JOIST
LOCATION- EACH SIDE of JOISTS

AS PER PLAN - "USP" HANGER- "SUH36-(U36)" 16ga., (8) 10d Nail – HEADER ,
(4) 10d x 1-1/2" Nail JOIST

Sincerely, ROBERT ISHMAN
9/6/08

APPROVED
SEP 11 2008
HOLLYWOOD, FLA.

FIELD COPY

VOID
SEE REV.
9/16/08

LICENSE NO. AR-0012684 / AA-C001769
2117 HOLLYWOOD BLVD., HOLLYWOOD, FLORIDA 33020
TEL; (954) 929-9695 / FAX; (954) 929-9597

Cancellation Request.

Master B08-10157

Jafe Contracting Company
d/b/a Modern Electric
240 N0rth Dixie Highway Suite # 19
Hollywood, Fl 33020
(954) 921-6360
05E001170 ER13013275 05CME11566X

Re:Master Permit #B08101571, Electrical Permit # E08100687
Job site address is 1404 Jackson St. The owners name is Mathias Kondolf.

Please cancel the Electrical Permit # E08100687. Two permits were issued on this job by mistake. Cancel #E08100687. All other electrical work will be done under the other electrical permit that was issued. Thank you.

Thank You,
Joshua Agriesti.

05CME11566X
ER13013275

Canceled Sub
Appears to be
duplicate.
9/19/08

ROBERT G. ISHMAN P.A.
A R C H I T E C T

TRANSMITTAL SEPT. 6, 2008

TO; CITY of HOLLYWOOD – BUILDING DEPT.

C/O; BUILDING OFFICIAL

Ref; PROPOSED ADDITION to RESIDENCE and TRELLACE PATIO
1404 JACKSON ST.
HOLLYWOOD, FLORIDA 33020

Item; REVISIONS to PLANS- ARCHITECTS PROJECT - No. 2709

DEAR BUILDING OFFICIAL;
PLEASE ACCEPT THE FOLLOWING AS REVISIONS TO PERMITTED PLANS.

TRELLACE AREA OPEN WOOD JOISTS;
(NO UPLIFT- OPEN JOISTS)

REVISION- JOIST TO BEAM CONNECTION
"USP" TIE- "RT7 " 18ga, ~~(5) 8d Nails to HEADER, (5) 8d Nails to JOIST~~
LOCATION- EACH SIDE of JOISTS

AS PER PLAN - "USP" HANGER- "SUH36-(U36) " 16ga., (8) 10d Nail – HEADER ,
~~(4) 10d x 1-1/2" Nail JOIST~~

Sincerely, ROBERT ISHMAN
9/6/08

APPROVED
SEP 11 2008
CITY OF HOLLYWOOD, FLA.
STRUCTURAL

LICENSE NO. AR-0012684 / AA-C001769
2117 HOLLYWOOD BLVD., HOLLYWOOD, FLORIDA 33020
TEL; (954) 929-9695 / FAX; (954) 929-9597

FLORIDA ENGINEERING & TESTING, INC.

Phone: (866) 781-6889 • Fax: (866) 784-8550
www.floridaengineeringandtesting.com
250 S.W. 13th Avenue
Pompano Beach, FL 33069

June 10, 2008

Joe Hart Builders
1500 S.W. 131st Way
Pembroke Pines, Florida 33027

RE: FOUNDATION SOIL DENSITY & BEARING CAPABILITY
Proposed Addition
Kondolf Residence
1404 Jackson Street
Hollywood, Florida

Dear Sir or Madam:

In accordance with your request, we have supervised general site preparation procedures for the above reference location and have performed density tests of fill material used to raise the site to grade. Site preparation procedures were in general accordance with the specifications set forth by the U.S. Department of Housing and Urban Development and comply with the approved Plans and Specifications. **These tests were in accordance with Florida Building Code Chapter 18, latest edition as it pertains to the High Velocity Hurricane Zone and A.S.T.M. Standards.**

Based on our observations and results of density tests, it is our opinion that the above referenced building pad is suitable for the construction of an addition with foundations proportioned for a design bearing stress not to exceed **2,500 pounds per square foot (P.S.F.)** without settlement detrimental to the addition placed upon it.

Sincerely,

6/13/08

Pao Tcheou, P.E.
Florida Engineering & Testing, Inc.
Florida Reg. No. 65742
Certificate of Authorization No. 6923

APPROVED
JUN 17 2008
CITY OF HOLLYWOOD FLA.
STRUCTURAL

Member National Association of Women In Construction (N.A.W.I.C.) W/BE

FLORIDA ENGINEERING & TESTING, INC.

Phone: (866) 781-6889 • Fax: (866) 784-8550
www.floridaengineeringandtesting.com
250 S.W. 13th Avenue
Pompano Beach, FL 33069

PROCTOR COMPACTION TEST

DATE: 6/10/08 **ORDER NO:** 08-1937 **PERMIT NO.** _____

CLIENT: Joe Hart Builders

ADDRESS: 1500 S.W. 131st Way Pembroke Pines, Florida 33027

PROJECT: Proposed Addition Kondolf Residence

ADDRESS: 1404 Jackson Street Hollywood, Florida

MATERIAL DESCRIPTION: Dark Gray Sand

SAMPLED BY: C.C. **TESTED BY:** J.T.

TEST RESULTS

Laboratory Number P- 1937 **Sample Number** 1

The following compaction test was conducted in accordance with the Standard Methods for Moisture Density Relations of soil using a **10 lb.** Hammer and an **18"** drop **A.S.T.M. D-1557 METHOD**

% MOISTURE	DRY DENSITY
9.2	100.3
10.1	103.7
14.2	102.6

Optimum Moisture 12.2 **Percent**

100% Maximum Dry Density 104.8 **lbs./cu.ft.**

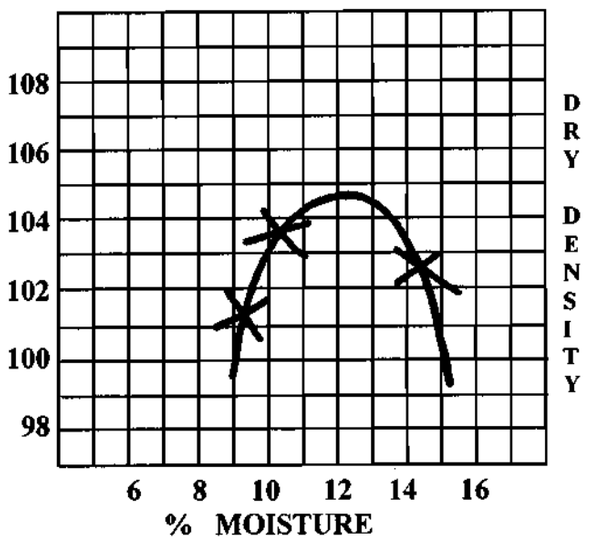

Respectfully submitted,

6/12/08

PAO TCHEOU, P.E.
FLORIDA ENGINEERING & TESTING, INC.
FLORIDA REG. NO 65742
Certificate of Authorization No. 6923

As a mutual protection to clients, the public and ourselves, all reports are submitted as the confidential property of clients, and authorization for publication of statements, conclusions or extracts from or regarding our reports is reserved pending our written approval.

Member National Association of Women In Construction (N.A.W.I.C.) W/BE

FLORIDA ENGINEERING & TESTING, INC.

Phone: (866) 781-6889 •Fax: (866) 784-8550
www.floridaengineeringandtesting.com
250 S.W. 13th Avenue
Pompano Beach, FL 33069

FIELD DENSITY TESTS OF COMPACTED SOILS

DATE: 6/10/08 ORDER NO: 08-1937 PERMIT NO. _____

CLIENT: Joe Hart Builders

ADDRESS: 1500 S.W. 131st Way Pembroke Pines, Florida 33027

PROJECT: Proposed Addition Kondolf Residence

ADDRESS: 1404 Jackson Street Hollywood, Florida

MATERIAL DESCRIPTION: Dark Gray Sand

LOCATION: Center of Addition Pad

LOCATION: N. Column Pad

LOCATION: E. Column Pad

LOCATION: W. Column Pad

LOCATION:

LOCATION:

FIELD DENSITY METHOD A.S.T.M. D-2922

DRY DENSITY P.C.F. IN THE FIELD	99.8	---	---	---		
CONE RESISTANCE (TSF)*	35	35	35	40		
% MOISTURE	2.8	---	---	---		
% COMPACTION IN THE FIELD	95.2	>95*	>95*	>95*		
% COMPACTION REQUIREMENT BY SPECS	95%					
PROCTOR VALUE, P.C.F.	104.8					
OPTIMUM MOISTURE, %	12.2					
LABORATORY NO.	P-1937					
DEPTH IN INCHES	12"					

PROCTOR A.S.T.M. D-1557 METHOD

* Compaction percentage estimated from cone penetrometer reading obtained with a Brainard-Kilman Model S-214 hand-held cone penetrometer.

REMARKS: Steel In Place At Time of Testing.

TESTED BY: C.C.

CHECKED BY: H.J.

Respectfully submitted,

6/12/08

PAO TCHEOU, P.E.
FLORIDA ENGINEERING & TESTING, INC.
FLORIDA REG. NO 65742
Certificate of Authorization No. 6923

As a mutual protection to clients, the public and ourselves, all reports are submitted as the confidential property of clients, and authorization for publication of statements, conclusions or extracts from or regarding our reports is reserved pending our written approval.

*A density test determines the degree of compaction of the tested layer of material only. In no way shall a density test replace a soil bearing capacity determination.

Quality QA Assurance

FLORIDA ENGINEERING & TESTING, INC.

Phone: (954) 970-8870 • 970-8809
(561) 998-7002 • Fax: (954) 975-3934
1845 N.W. 33rd Street
Pompano Bch, FL 33064

February 10, 2003 **Job Order # 2003-547**

Attn: Mr. Mark Sever

Sever Design Group
5580 N.E. 28th Avenue
Fort Lauderdale, Florida 33308

RE: SUBSOIL INVESTIGATION
Proposed Addition
1404 Jackson Street
Hollywood, Florida

Dear Mr. Sever:

Pursuant to your request, Florida Engineering & Testing, Inc., has completed a subsoil investigation on February 10, 2003, at the above referenced site. The purpose of our investigation was to verify subsoil conditions relative to foundation preparation and design.

One (1) **SPT** boring test was performed according to **ASTM D-1586** down to a depth of fifteen feet (15') below the existing ground surface. (See attached field sketch for location). The following is a general condition for the subject site:

Depth From To	Soil Descriptions
0'0" - 1'6"	**Pale Brown Silica Sand**
1'6" - 4'0"	**Grayish Brown Sand**
4'0" - 7'0"	**Brown Sand W/Traces of Roots**
7'0" - 11'0"	**Tan Clayey Sand W/Rock**
11'0" - 15'0"	**Clayey Limerock**

Groundwater table elevation was measured immediately at the completion of the boring and was found at four feet ten inches (4'10") below ground surface. Fluctuation in water levels should be anticipated due to surface runoff, tidal influences and seasonal variations.

The boring log attached presents a detailed description of the soils encountered at the location. The soil stratification shown on the boring log is based on the examination of the recovered soil samples and interpretation of the driller's field log. It indicates only the approximate boundaries between soil types. The actual transitions between adjacent soil types may be gradual.

Based on our understanding of the proposed structure and the information obtained from our field boring log, we recommend the following procedures for foundation design:

1) Strip the entire footings and building construction area plus five feet (5') past the outer perimeter of the proposed structure, of topsoil and ground vegetation (when encountered) down to clean granular material.

2) Saturate and compact all construction areas with a heavy self-propelled vibratory roller to a minimum of 95% of the A.S.T.M. D-1557 modified proctor method. Make a minimum of ten (10) passes with the roller in each direction.

3) Backfill construction area to proper elevation if needed using a clean granular material placed in lifts not to exceed twelve inches (12") in thickness and compacted as per item 2.

4) Care should be taken when using vibration in case of existing structures in the vicinity of the construction area. If vibration cannot be used for compaction, static compaction may be applied. However, in this case, the compacted layers should not exceed 6 inches in thickness.

5) All construction fill material shall be clean granular soil, free of organics or other deleterious material, and shall contain no more than five percent fines passing a U.S. Standard No. 200 sieve (0.075mm).

6) Representative samples of the on-site and proposed fill material should be collected and tested to determine the classification and compaction characteristics.

7) Verify all densification procedures by taking an adequate number of field density tests in each layer of compacted material.

8) All Geotechnical work shall be performed under the supervision of our Geotechnical Engineer or his authorized representative.

The above foundation recommendations being achieved and verified; it is our opinion that the proposed addition be designed for a shallow foundation system with a permissible soil bearing pressure not to exceed 2000 P.S.F.

Regardless of the thoroughness of a Geotechnical exploration there is always a possibility that conditions may be different from those of the test location; therefore Florida Engineering & Testing, Inc., does not guarantee any subsoil condition surrounding the bore test hole. If different conditions are encountered, Florida Engineering & Testing, Inc., shall be notified to review the findings and make any recommendations as needed. In accepting this report the client understands that all data from the soil boring is intended for foundation analysis only and is not to be used for excavating, backfilling or pricing estimates. The site contractor must familiarize themselves with the job site conditions.

As mutual protection to clients, the public and ourselves, all reports are submitted as the confidential property of clients, and authorization for publication of statements, conclusions or extracts from or regarding our reports is reserved pending our written approval.

Florida Engineering & Testing, Inc., appreciates the opportunity to be of service to you at this phase of your project. If you have any questions or comments, please give us a call. We would be glad to help you in any way we can. It has been a pleasure working with you and we look forward to hearing from you again in the near future.

Sincerely,

Allen Witt 2-10-03

Allen Witt, P.E.
Florida Engineering & Testing, Inc.
Florida Reg. No. 39681

SPT Test Boring Report

Client: Sever Design Group **Hole No.:** B - 1
Project: Proposed Addition **Date:** Feb/05/03
Address: 1404 Jackson Street Hollywood, Florida
Location: See Attached Field Sketch

Depth (Ft)	Soil Descriptions	Hammer Blows	N
	0" – 1'6" Pale Brown Silica Sand	3 3 5 7	8
	1'6" - 4' Grayish Brown Silica Sand	8 6 5 8	11
5	4' – 7' Brown Sand W/Traces of Roots	6 7 7 9	14
		8 6 11 10	17
	7' – 11' Tan Clayey Sand W/Rock	12 11 11 14	22
10		13 12 16 18	28
	11' – 15' Clayey Limerock	15 17 14 15	31
15		16 14	

Penetration "N" Value: 10 20 30 40

Water Level: 4'10" **Below Land Surface**

2-10-03

Allen Witt, P.E.
Florida Engineering & Testing, Inc.
Florida Reg. No. 39681

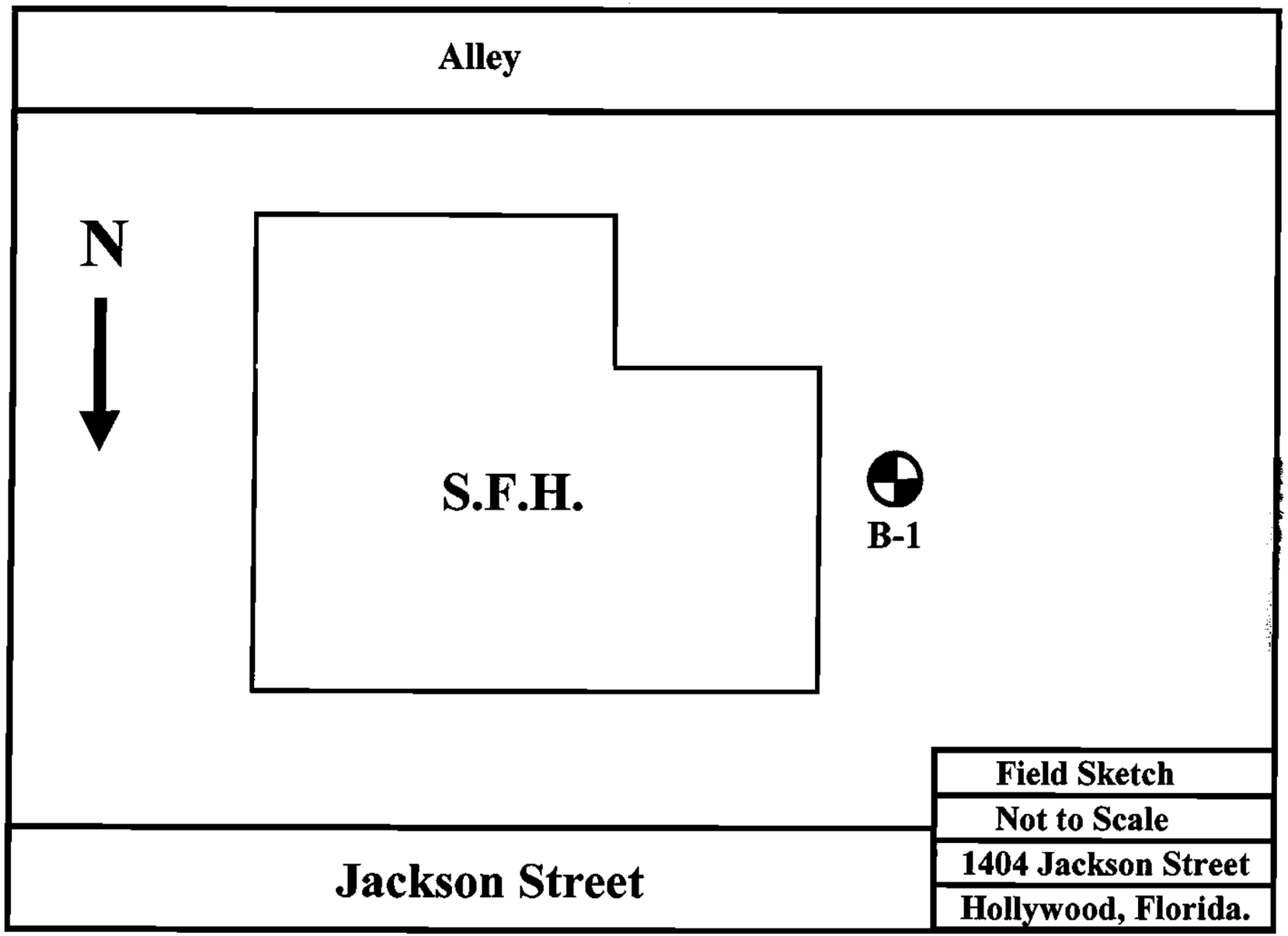
Alley
N
S.F.H.
B-1
Field Sketch
Not to Scale
1404 Jackson Street
Hollywood, Florida.
Jackson Street



KEY CLASSIFICATION & SYMBOLS

Correlation of Penetration Resistance With Relative Density and Consistency

	Cone Penetration Tests kg/cm²	Standard Penetration Tests blows/ft	Relative Density
Sands	0 - 16	0 - 4	Very Loose
	17 - 40	5 - 10	Loose
	41 - 80	11 - 20	Firm
	81 - 120	21 - 30	Very Firm
	Over 120	31 - 50	Dense
Silts & Clays	0 - 3	0 - 2	Very Soft
	4 - 9	3 - 4	Soft
	10 -17	5 - 8	Firm
	18 - 31	9 -15	Stiff
	32 - 60	16 -30	Very Stiff
	Over 60	31 - 50	Hard

Particle Size

Boulder	>12 in.
Cobble	3 to 1 in.
Gravel	4.76 mm to 3 in.
Sand	0.074 mm to 4.76 mm
Silt	0.005 mm to 0.074 mm
Clay	< 0.005 mm

Modifiers

5% - 10%	Slightly Silty or Clayey
10% - 30%	Silty or Clayey
30% - 50%	Very Silty or Very Clayey
0 - 5%	Slight Trace
6 - 10%	Trace
11 - 20%	Little
21 - 35%	Some
> 35%	And

Rock Hardness Description

Soft	Rock core crumbles when handled.
Medium	Can break core with your hands.
Moderately Hard	Thin edges of rock core can be broken with fingers.
Hard	Thin edges of rock core cannot be broken with fingers.
Very Hard	Rock core rings when struck with a hammer (cherts).

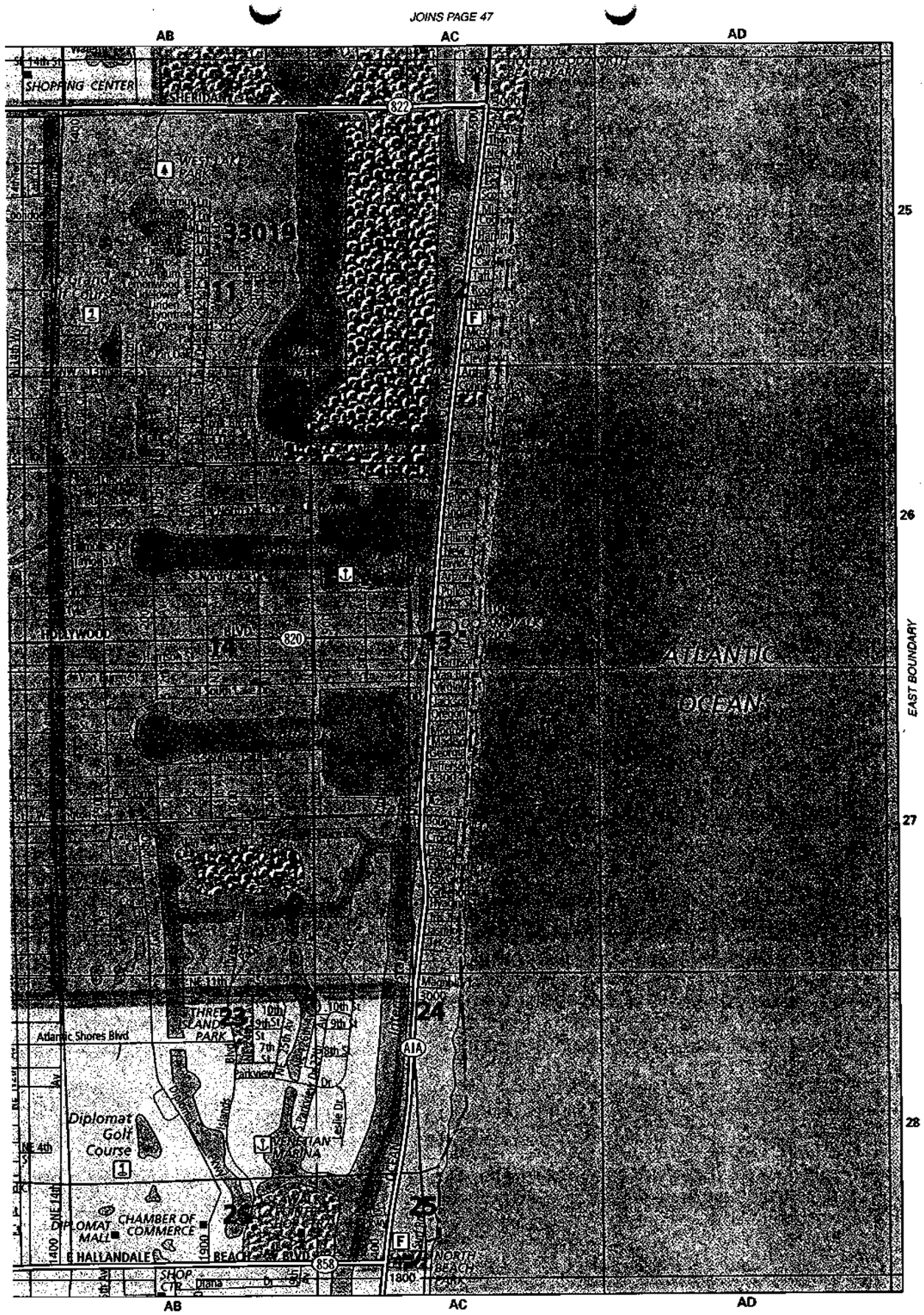
JOINS PAGE 47
AB
AC
AD
SHOPPING CENTER
West Lake
Golf Course
HOLLYWOOD BLVD
ATLANTIC OCEAN
EAST BOUNDARY
Atlantic Shores Blvd
THREE ISLAND PARK
Diplomat Golf Course
VENETIAN MARINA
DIPLOMAT MALL
CHAMBER OF COMMERCE
HALLANDALE BEACH BLVD
SHOP CTR
NORTH BEACH PARK
A1A
Parkview Dr
Ellie Dr
Diana Dr
25
26
27
28
JOINS PAGE 67

INSTR # 107930369
OR BK 45418 Pages 257 - 258
RECORDED 06/04/08 09:06:32
BROWARD COUNTY COMMISSION

DEPUTY CLERK 1032
#1, 2 Pages

DECLARATION OF UNITY OF TITLE

KNOWN ALL MEN BY THESE PRESENTS, that pursuant to the ordinances of the City Of Hollywood pertaining to zoning, the issuance of building permits, and regulating building construction activities, the undersigned, being the fee owner(s) of the following described real property situated in the City of Hollywood, County of Broward and State of Florida, do hereby make the following declaration of conditions, limitations and restrictions on said lands, hereinafter to be known and referred to as a DECLARATION OF UNITY OF TITLE, as to the following particulars:

1. That the undersigned is the owner(s) in fee simple of the properties described as follows:
   LEGAL DESCRIPTION: LOT 17 AND EAST 1/2 OF LOT 18, BLOCK 89 OF HOLLYWOOD, ACCORDING TO THE PLAT THEREOF, AS RECORDED IN PLAT BOOK 1, PAGE 21, OF THE PUBLIC RECORDS OF BROWARD COUNTY,FLORIDA.
   ADDRESS: 1404 JACKSON STREET HOLLYWOOD,FLORIDA
2. That the aforesaid plot or combination of separate lots, plots, parcels, acreage or portions thereof shall hereafter be regarded and is hereby declared to be unified under one title as an indivisible building site (hereinafter referred to as "Property")

3. That the said Property, for the purpose of building, zoning and other applicable codes and regulations, shall henceforth be considered as one parcel of land and that no portion shall be sold, assigned, transferred, conveyed, or devised except in its entirety as one plot or parcel of land; provided, however, that recordation of a mortgage on any portion of the Property shall not be deemed to be in contravention of this Declaration.

4. The undersigned further agrees that this Declaration of Unity of Title shall constitute a covenant to run with the land, as provided by law, and shall be binding upon the undersigned, their successors and assigns, and all parties claiming under them until such time as the same may be released in writing under the order of the City Commission of the City of Hollywood.

5. The undersigned also agrees that this instrument shall be recorded in the Public Records of Broward County.

(This space intentionally left blank.)

Return to: Office of Planning
City of Hollywood
2600 Hollywood Blvd, Room 315
Hollywood, FL 33020

2

(UNITY OF TITLE BETWEEN Owner Mathias Kondolf AND THE CITY OF HOLLYWOOD)

IN WITNESS WHEREOF, the said property owner has signed and sealed these presents this 13th day of May, 2008.

APPLICANTS NAME

By Mathias R. Kondolf

MATHIAS KONDOLF

Signed, sealed, and delivered in the presence of:

_____ sign

(witness 1)

Robert Ishman print

_____ sign

(witness 2)

_____ print

STATE OF FLORIDA }

SS:

COUNTY OF BROWARD }

The foregoing instrument was acknowledged before me this May 13th 2008,

by _____, who is known to me ~~or produced~~ _____ ~~as identification~~.

Everett Butler sign

EVERETT BUTLER print

Notary Public, State of Florida At Large

(SEAL)

Commission No:_____

My Commission Expires _____

NOTARY PUBLIC-STATE OF FLORIDA
Everett Butler
Commission # DD680457
Expires: MAY 20, 2011
BONDED THRU ATLANTIC BONDING CO., INC.

APPROVED
MAY 16 2008
CITY OF HOLLYWOOD FLA.
STRUCTURAL

MIAMI-DADE COUNTY

BUILDING CODE COMPLIANCE OFFICE (BCCO)
PRODUCT CONTROL DIVISION

MIAMI-DADE COUNTY, FLORIDA
METRO-DADE FLAGLER BUILDING
140 WEST FLAGLER STREET, SUITE 1603
MIAMI, FLORIDA 33130-1563
(305) 375-2901 FAX (305) 375-2908
www.buildingcodeonline.com

NOTICE OF ACCEPTANCE (NOA)

TRACO Security Windows & Doors, Inc.
71 Progress Avenue
Cranberry Township, PA 16066

SCOPE:

This NOA is being issued under the applicable rules and regulations governing the use of construction materials. The documentation submitted has been reviewed by Miami-Dade County Product Control Division and accepted by the Board of Rules and Appeals (BORA) to be used in Miami Dade County and other areas where allowed by the Authority Having Jurisdiction (AHJ).

This NOA shall not be valid after the expiration date stated below. The Miami-Dade County Product Control Division (In Miami Dade County) and/or the AHJ (in areas other than Miami Dade County) reserve the right to have this product or material tested for quality assurance purposes. If this product or material fails to perform in the accepted manner, the manufacturer will incur the expense of such testing and the AHJ may immediately revoke, modify, or suspend the use of such product or material within their jurisdiction. BORA reserves the right to revoke this acceptance, if it is determined by Miami-Dade County Product Control Division that this product or material fails to meet the requirements of the applicable building code.

This product is approved as described herein, and has been designed to comply with the Florida Building Code, including the High Velocity Hurricane Zone.

DESCRIPTION: Aluminum Tube Mullion (No Reinforcement) – L.M.I.

APPROVAL DOCUMENT: Drawing No. **06-TRA-0004**, titled "Aluminum Tube Mullions", sheets 1 through 3 of 3, dated 12/1/06, prepared by Engineering Express, signed and sealed by Frank L. Bennardo, P.E., bearing the Miami-Dade County Product Control Renewal stamp with the Notice of Acceptance number and expiration date by the Miami-Dade County Product Control Division.

MISSILE IMPACT RATING: Large and Small Missile Impact Resistant

LABELING: Each unit shall bear a permanent label with the manufacturer's name or logo, city, state and following statement: "Miami-Dade County Product Control Approved", unless otherwise noted herein.

RENEWAL of this NOA shall be considered after a renewal application has been filed and there has been no change in the applicable building code negatively affecting the performance of this product.

TERMINATION of this NOA will occur after the expiration date or if there has been a revision or change in the materials, use, and/or manufacture of the product or process. Misuse of this NOA as an endorsement of any product, for sales, advertising or any other purposes shall automatically terminate this NOA. Failure to comply with any section of this NOA shall be cause for termination and removal of NOA.

ADVERTISEMENT: The NOA number preceded by the words Miami-Dade County, Florida, and followed by the expiration date may be displayed in advertising literature. If any portion of the NOA is displayed, then it shall be done in its entirety.

INSPECTION: A copy of this entire NOA shall be provided to the user by the manufacturer or its distributors and shall be available for inspection at the job site at the request of the Building Official.

This NOA **revises and renews NOA # 06-1212.05** and consists of this page 1 and evidence page E-1, as well as approval document mentioned above.

The submitted documentation was reviewed by **Manuel Perez, P.E.**

APPROVED
OK

NOA No. 07-0828.06
Expiration Date: January 2, 2012
Approval Date: December 6, 2007

TRACO Security Windows & Doors, Inc.

NOTICE OF ACCEPTANCE: EVIDENCE SUBMITTED

A. DRAWINGS

1. Manufacturer's die drawings and sections.
2. Drawing No **06-TRA-0004**, Sheets 1 through 3 of 3, titled "Aluminum Tube Mullions", dated 12/1/06, prepared by Engineering Express, signed and sealed by Frank L. Bennardo, P.E.

B. TESTS

1. Test reports on: 1) Air Infiltration Test, per FBC, TAS 202-94
   2) Uniform Static Air Pressure Test, Loading per FBC TAS 202-94
   3) Water Resistance Test, per FBC, TAS 202-94
   4) Large Missile Impact Test per FBC, TAS 201-94
   5) Cyclic Wind Pressure Loading per FBC, TAS 203-94

   along with marked-up drawings and installation diagram of two mulled Alum. Single Hung Windows, prepared by Farabaugh Engineering and Testing, Inc., Test Report No. **FET-T214-07**, dated 6/21/07, signed and sealed by Daniel G. Farabaugh, P.E.
2. Test reports on: 1) Uniform Static Air Pressure Test, per PA 202-94
   along with marked-up drawings and installation diagram of two mulled Aluminum Sliding Glass Doors, prepared by Miami Testing Laboratory, Inc., Test Report No. **MTL-16605**, dated 12/07/95, signed and sealed by David Gale Ober, P.E.
   (Submitted under previous NOA # 99-0104.02)
3. Test reports on: 1) Large Missile Impact Test per PA 201-94
   2) Cyclic Wind Pressure Loading per PA 203-94

   along with marked-up drawings and installation diagram of two mulled Aluminum Double Hung Windows, prepared by Fenestration Testing Laboratory, Inc., Test Report No.**FTL-1350**, dated 12/12/95, signed and sealed by Gilbert Diamond, P.E.
   (Submitted under previous NOA # 99-0104.02)

C. CALCULATIONS

1. Anchor verification calculations and structural analysis, complying with FBC-2004, , dated 12/6/06, prepared by Engineering Express, signed and sealed by Frank L. Bennardo, P.E.

D. QUALITY ASSURANCE

1. Miami Dade Building Code Compliance Office (BCCO).

E. MATERIAL CERTIFICATIONS

1. None.

F. STATEMENTS

1. Statement letter of conformance, dated 12/6/06, prepared by Engineering Express, signed and sealed by Frank L. Bennardo, P.E.
2. Statement letter of no financial interest, dated 12/6/06, prepared by Engineering Express, signed and sealed by Frank L. Bennardo, P.E.

G. OTHER

1. Notice of Acceptance No. **06-1212.05**, issued to TRACO Security Windows & Doors, Inc. for their Aluminum Tube Mullion (No Reinforcement), approved on 02/01/07 and expiring on 01/2/08.

Manuel Perez, P.E.
Product Control Examiner
NOA No. 07-0828.06
Expiration Date: January 2, 2012
Approval Date: December 6, 2007

ALUMINUM TUBE MULLIONS

LARGE MISSILE IMPACT RESISTANT

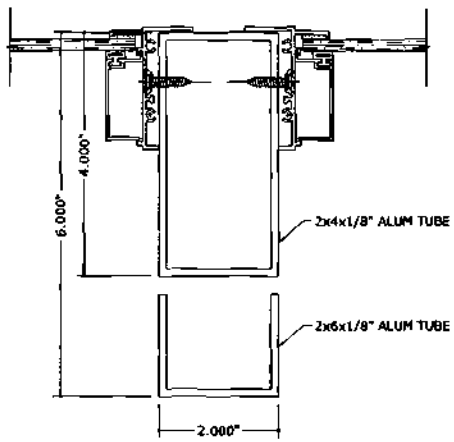

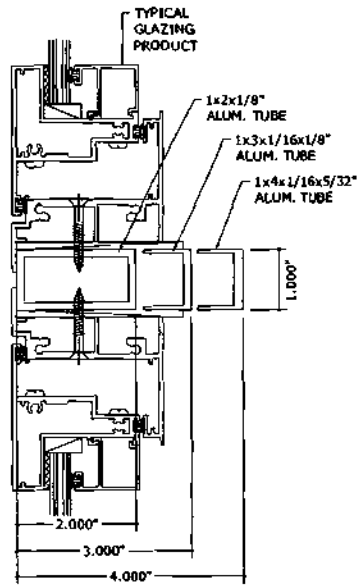

1/1 TYPICAL MULLIONS SUPPORTING FENESTRATION PRODUCTS

HORIZONTAL OR VERTICAL INSTALLATION

SEE WINDOW OR DOOR APPROVAL FOR FASTENER SIZES AND SPACING

GENERAL NOTES

1. THE SYSTEM DESCRIBED HEREIN HAS BEEN DESIGNED AND TESTED IN ACCORDANCE WITH THE 2004 FLORIDA BUILDING CODE, FOR USE WITHIN THE HIGH VELOCITY HURRICANE ZONE, PER TAS 201 / 203 AND THE 2000 ALUMINUM DESIGN MANUAL.

2. NO 33-1/3% INCREASE IN ALLOWABLE STRESS HAS BEEN USED IN THE DESIGN OF THIS SYSTEM. WIND LOAD DURATION FACTOR Cd=1.6 HAS BEEN USED FOR WOOD ANCHOR DESIGN.

3. POSITIVE AND NEGATIVE DESIGN PRESSURES CALCULATED FOR USE WITH THIS SYSTEM SHALL BE DETERMINED BY OTHERS ON A JOB-SPECIFIC BASIS IN ACCORDANCE WITH THE GOVERNING CODE.

4. THE SYSTEM DETAILED HEREIN IS GENERIC AND DOES NOT PROVIDE INFORMATION FOR A SPECIFIC SITE. FOR SITE CONDITIONS DIFFERENT FROM THE CONDITIONS DETAILED HEREIN, A LICENSED ENGINEER OR REGISTERED ARCHITECT SHALL PREPARE SITE SPECIFIC DOCUMENTS FOR USE IN CONJUNCTION WITH THIS DOCUMENT.

5. PERMIT HOLDER SHALL VERIFY THE ADEQUACY OF THE EXISTING STRUCTURE TO WITHSTAND SUPERIMPOSED LOADS. WOOD BUCKS (BY OTHERS) SHALL BE ANCHORED PROPERLY TO TRANSFER LOADS TO THE EXISTING STRUCTURE.

6. ALL EXTRUSIONS SHALL BE 6063-T5 ALUMINUM ALLOY, UNLESS NOTED OTHERWISE.

7. ALL FENESTRATION PRODUCTS TO BE USED WITH THESE MULLIONS SHALL MEET ALL APPLICABLE CODE REQUIREMENTS, e.g. WIND LOAD RESISTANCE, AIR & WATER INFILTRATION, FORCED ENTRY, SAFEGUARDS, ETC.

8. TOP & BOTTOM DETAILS SHOWN MAY BE INTERCHANGED AS FIELD CONDITIONS DICTATE. MULLIONS MAY BE MOUNTED VERTICALLY OR HORIZONTALLY AS APPLICABLE.

9. MULLIONS SHOWN HEREIN ARE LARGE MISSILE IMPACT RESISTANT. VERIFY IMPACT RESISTANCE OF FENESTRATION PRODUCTS TO BE USED WITH THESE MULLIONS.

10. ALL BOLTS & WASHERS SHALL BE ZINC COATED STEEL, GALVANIZED STEEL, OR STAINLESS STEEL WITH A MINIMUM TENSILE YIELD STRENGTH OF 60 KSI.

11. ALL STEEL IN CONTACT WITH ALUMINUM SHALL BE PAINTED OR PLATED.

PRODUCT RENEWED
as complying with the Florida Building Code
Acceptance No. 07-0828.06
Expiration Date JAN. 2, 2012
By Miami Dade Product Control Division

PRODUCT REVISED
as complying with the Florida Building Code
Acceptance No. 06-1212.05
Expiration Date JAN. 2, 2008
By Miami Dade Product Control Division

FRANK L. BENNARDO, P.E.
PE0046549
12/06/2006

ENGINEERING EXPRESS®
160 SW 12th AVENUE, #106
DEERFIELD BEACH, FL 33442
PH: (954) 354-0660 FAX: (954) 354-0443
WWW.ENGEXP.COM
CERT OF AUTH #0005
L. BENNARDO, P.E., INC. INNOVATION

TRACO Windows & Doors Inc.
71 Progress Avenue, Cranberry Township, PA 16166
Tel. (724) 776-7000

ALUMINUM TUBE MULLIONS
LARGE MISSILE IMPACT RESISTANT
MIAMI-DADE NOTICE OF ACCEPTANCE

REMARKS	DRWN/CHKD	DATE
INT ISSUE	CL FLB	12/1/06

06-TRA-0004
SCALE: 1/01
PAGE DESCRIPTION:
3
1

12/06/2006 - 1:29pm clangley F:\01 Project Files\Traco (TRA)\2006 Jobs\06-TRA-0004 Mullions, LMI (NOA)\06-TRA-0004_06 Mullions, LMI (NOA).dwg

DESIGN LOAD SCHEDULES

1. TABLES BELOW GIVE ALLOWABLE PRESSURES FOR EACH MULLION AT SPAN & TRIBUTARY DIMENSIONS SHOWN.
2. MULLION SPAN & TRIBUTARY SPAN ARE DEPICTED TO THE RIGHT.

PRODUCT RENEWED as complying with the Florida Building Code
Acceptance No. 03-0828.06
Expiration Date MAY 2 2007
By Manuel Perez
Miami-Dade Product Control Division

PRODUCT REVISED as complying with the Florida Building Code
Acceptance No. 06-1212.05
Expiration Date JAN. 2, 2008
By Manuel Perez
Miami-Dade Product Control Division

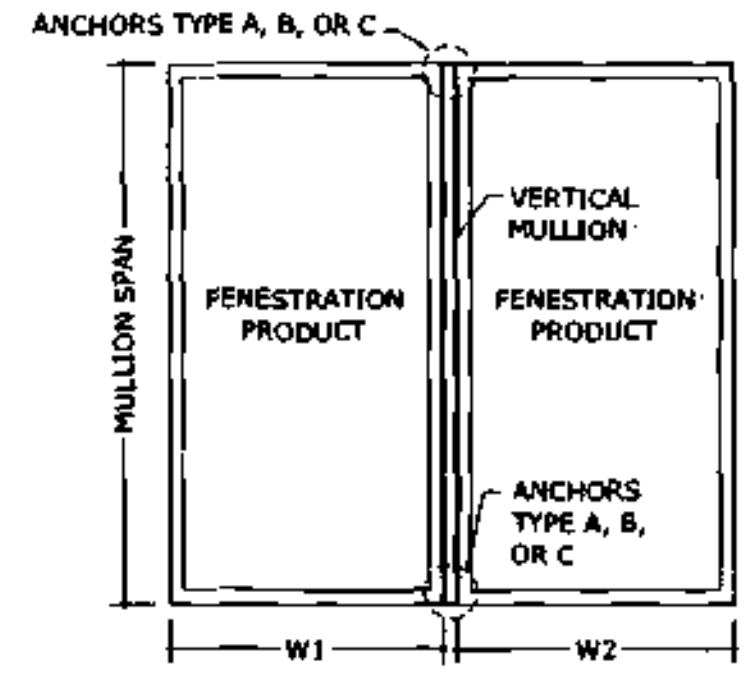

"TRIBUTARY SPAN" = $\frac{W1 + W2}{2}$

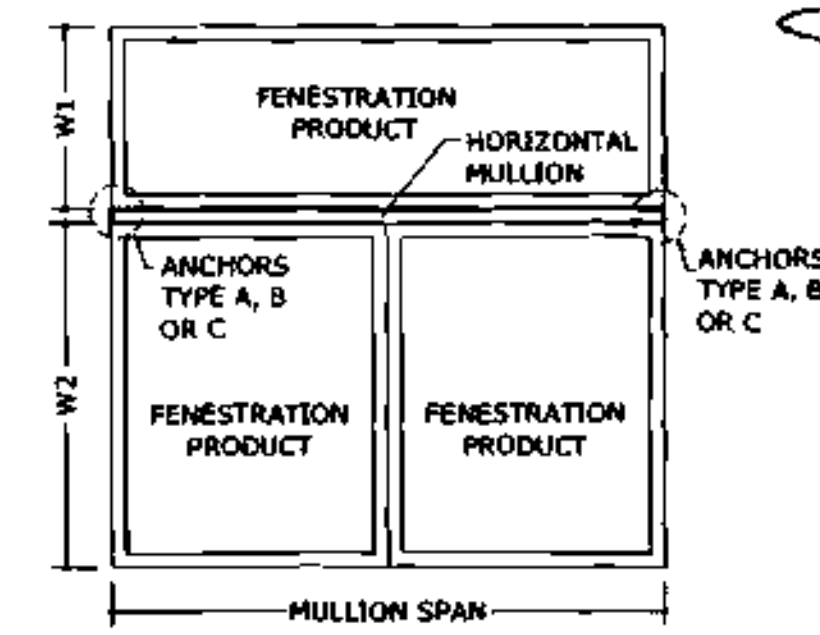

1" x 2" x 1/8" TUBE MULLION

MULLION SPAN	TRIBUTARY SPAN 24"	27"	30"	33"	36"	39"	42"	45"	48"	51"	54"	57"
90"	11.8	10.5	—	—	—	—	—	—	—	—	—	—
84"	14.5	12.9	11.6	10.6	—	—	—	—	—	—	—	—
78"	18.1	16.1	14.5	13.1	12.0	11.1	10.3	—	—	—	—	—
72"	23.0	20.4	18.4	16.7	15.3	14.1	13.1	12.3	11.5	10.8	10.2	—
66"	29.8	26.5	23.9	21.7	19.9	18.4	17.0	15.9	14.9	14.0	13.3	12.6
60"	39.7	35.3	31.8	28.9	26.5	24.4	22.7	21.2	19.9	18.7	17.6	16.7
54"	51.7	46.0	41.4	37.6	34.5	31.8	29.8	27.6	25.9	24.3	23.0	21.8
48"	65.9	58.6	52.7	47.9	43.9	40.5	37.6	35.1	32.9	31.0	29.3	27.7
42"	86.6	77.0	69.3	63.0	57.7	53.3	49.5	46.2	43.3	40.8	38.5	36.5
36"	118.7	105.6	95.0	86.3	79.1	73.1	67.8	63.3	59.4	55.9	52.8	50.0
30"	140.0	140.0	137.2	124.8	114.4	105.6	98.0	91.5	85.8	80.7	76.2	72.2

1" x 3" x 1/16" x 1/8" TUBE MULLION

MULLION SPAN	TRIBUTARY SPAN 24"	27"	30"	33"	36"	39"	42"	45"	48"	51"	54"	57"
120"	11.0	—	—	—	—	—	—	—	—	—	—	—
114"	12.8	11.4	10.2	—	—	—	—	—	—	—	—	—
108"	15.1	13.4	12.0	11.0	10.0	—	—	—	—	—	—	—
102"	17.9	15.9	14.3	13.0	11.9	11.0	10.2	—	—	—	—	—
96"	21.4	19.1	17.2	15.6	14.3	13.2	12.3	11.4	10.7	10.1	—	—
90"	25.8	22.9	20.6	18.7	17.2	15.9	14.7	13.7	12.9	12.1	11.4	10.8
84"	29.8	26.4	23.8	21.6	19.8	18.3	17.0	15.9	14.9	14.0	13.2	12.5
78"	34.7	30.9	27.8	25.3	23.2	21.4	19.8	18.5	17.4	16.3	15.4	14.6
72"	41.0	36.5	32.8	29.8	27.4	25.2	23.4	21.9	20.5	19.3	18.2	17.3
66"	49.2	43.7	39.3	35.8	32.8	30.3	28.1	26.2	24.6	23.1	21.8	20.7
60"	59.9	53.2	47.9	43.6	39.9	36.9	34.2	31.9	30.0	28.2	26.6	25.2
54"	74.5	66.2	59.6	54.2	49.7	45.8	42.6	39.7	37.3	35.1	33.1	31.4
48"	95.0	84.5	76.0	69.1	63.4	58.5	54.3	50.7	47.5	44.7	42.2	40.0
42"	125.1	111.2	100.1	91.0	83.4	77.0	71.5	66.7	62.6	58.9	55.6	52.7
36"	140.0	140.0	137.5	125.0	114.5	105.7	98.2	91.6	85.9	80.9	76.4	72.3
30"	140.0	140.0	140.0	140.0	140.0	140.0	140.0	133.2	124.9	117.5	111.0	105.2

1" x 4" x 1/16" x 5/32" TUBE MULLION

MULLION SPAN	TRIBUTARY SPAN 24"	27"	30"	33"	36"	39"	42"	45"	48"	51"	54"	57"
144"	14.5	12.9	11.6	10.6	—	—	—	—	—	—	—	—
138"	16.5	14.7	13.2	12.0	11.0	10.2	—	—	—	—	—	—
132"	18.9	16.8	15.1	13.7	12.6	11.6	10.8	10.1	—	—	—	—
126"	21.2	18.8	17.0	15.4	14.1	13.0	12.1	11.3	10.6	—	—	—
120"	23.5	20.9	18.8	17.1	15.7	14.5	13.4	12.5	11.8	11.1	10.5	—
114"	26.2	23.3	21.0	19.1	17.5	16.1	15.0	14.0	13.1	12.3	11.7	11.0
108"	29.4	26.1	23.5	21.4	19.6	18.1	16.8	15.7	14.7	13.8	13.1	12.4
102"	33.2	29.5	26.5	24.1	22.1	20.4	19.0	17.7	16.6	15.6	14.7	14.0
96"	37.7	33.5	30.2	27.4	25.1	23.2	21.6	20.1	18.9	17.7	16.8	15.9
90"	43.2	38.4	34.6	31.4	28.8	26.6	24.7	23.0	21.6	20.3	19.2	18.2
84"	50.0	44.4	40.0	36.3	33.3	30.7	28.5	26.6	25.0	23.5	22.2	21.0
78"	58.4	51.9	46.7	42.4	38.9	35.9	33.3	31.1	29.2	27.5	25.9	24.6
72"	69.0	61.3	55.2	50.2	46.0	42.5	39.4	36.8	34.5	32.5	30.7	29.1
66"	82.8	73.6	66.2	60.2	66.2	50.9	47.3	44.1	41.4	38.9	36.8	34.8
60"	100.9	89.7	80.8	73.4	67.3	62.1	57.7	53.8	50.5	47.6	44.9	42.5
54"	125.7	111.7	100.5	91.4	83.8	77.3	71.8	67.0	62.8	59.1	55.9	52.9
48"	140.0	140.0	126.4	116.7	107.0	98.8	91.7	85.6	80.2	75.5	71.3	67.6
42"	140.0	140.0	140.0	140.0	140.0	130.2	120.9	112.8	105.8	99.6	94.0	89.1
36"	140.0	140.0	140.0	140.0	140.0	140.0	140.0	140.0	140.0	136.9	129.3	122.4
30"	140.0	140.0	140.0	140.0	140.0	140.0	140.0	140.0	140.0	140.0	140.0	140.0

2" x 4" x 1/8" TUBE MULLION

MULLION SPAN	TRIBUTARY SPAN 24"	27"	30"	33"	36"	39"	42"	45"	48"	51"	54"	57"
144"	25.8	22.9	20.6	18.7	17.2	15.9	14.7	13.7	12.9	12.1	11.5	10.9
138"	29.3	26.0	23.4	21.3	19.5	18.0	16.7	15.6	14.6	13.8	13.0	12.3
132"	33.5	29.7	26.8	24.3	22.3	20.6	19.1	17.8	16.7	15.7	14.9	14.1
126"	38.5	34.2	30.8	28.0	25.6	23.7	22.0	20.5	19.2	18.1	17.1	16.2
120"	44.5	39.6	35.6	32.4	29.7	27.4	25.4	23.8	22.3	21.0	19.8	18.8
114"	51.9	46.2	41.6	37.8	34.6	32.0	29.7	27.7	26.0	24.4	23.1	21.9
108"	58.2	51.7	46.5	42.3	38.8	35.8	33.2	31.0	29.1	27.4	25.8	24.5
102"	65.4	58.1	52.3	47.6	43.6	40.2	37.4	34.9	32.7	30.8	29.1	27.5
96"	74.1	65.8	59.2	53.9	49.4	45.6	42.3	39.5	37.0	34.9	32.9	31.2
90"	84.5	75.1	67.6	61.5	56.4	52.0	48.3	45.1	42.3	39.8	37.6	35.6
84"	97.4	86.5	77.9	70.8	64.9	59.9	55.6	51.9	48.7	45.8	43.3	41.0
78"	113.3	100.7	90.6	82.4	75.5	69.7	64.7	60.4	56.6	53.3	50.4	47.7
72"	133.4	118.6	106.7	97.0	89.0	82.1	76.2	71.2	66.7	62.8	59.3	56.2
66"	140.0	140.0	127.2	115.6	106.0	97.9	90.9	84.8	79.5	74.8	70.7	67.0
60"	140.0	140.0	140.0	139.9	128.3	118.4	109.9	102.6	96.2	90.5	85.5	81.0
54"	140.0	140.0	140.0	140.0	140.0	140.0	135.7	126.7	118.8	111.8	105.6	100.0
48"	140.0	140.0	140.0	140.0	140.0	140.0	140.0	140.0	140.0	140.0	133.8	126.6
42"	140.0	140.0	140.0	140.0	140.0	140.0	140.0	140.0	140.0	140.0	140.0	140.0
36"	140.0	140.0	140.0	140.0	140.0	140.0	140.0	140.0	140.0	140.0	140.0	140.0
30"	140.0	140.0	140.0	140.0	140.0	140.0	140.0	140.0	140.0	140.0	140.0	140.0

2" x 6" x 1/8" TUBE MULLION

MULLION SPAN	TRIBUTARY SPAN 24"	27"	30"	33"	36"	39"	42"	45"	48"	51"	54"	57"
144"	59.0	52.4	47.2	42.9	39.3	36.3	33.7	31.5	29.5	27.8	26.2	24.8
138"	64.4	57.3	51.5	46.8	42.9	39.6	36.8	34.4	32.2	30.3	28.6	27.1
132"	70.6	62.8	56.5	51.4	47.1	43.5	40.3	37.7	35.3	33.2	31.4	29.7
126"	77.7	69.1	62.2	56.5	51.8	47.8	44.4	41.5	38.9	36.6	34.5	32.7
120"	86.0	76.4	68.8	62.5	57.3	52.9	49.1	45.8	43.0	40.5	38.2	36.2
114"	95.6	84.9	76.4	69.5	63.7	58.8	54.6	51.0	47.8	45.0	42.5	40.2
108"	106.8	94.9	85.4	77.7	71.2	65.7	61.0	57.0	53.4	50.3	47.5	45.0
102"	120.1	106.8	96.1	87.4	80.1	73.9	68.7	64.1	60.1	56.5	53.4	50.6
96"	136.1	121.0	108.9	99.0	90.7	83.7	77.8	72.6	68.0	64.0	60.5	57.3
90"	140.0	138.1	124.3	113.0	103.6	95.6	88.8	82.9	77.7	73.1	69.1	65.4
84"	140.0	140.0	140.0	130.2	119.3	110.2	102.3	95.5	89.5	84.2	79.6	75.4
78"	140.0	140.0	140.0	140.0	136.9	128.2	119.1	111.1	104.2	98.1	92.6	87.7
72"	140.0	140.0	140.0	140.0	140.0	140.0	140.0	130.9	122.6	115.5	109.1	103.4
66"	140.0	140.0	140.0	140.0	140.0	140.0	140.0	140.0	140.0	136.0	130.4	123.5
60"	140.0	140.0	140.0	140.0	140.0	140.0	140.0	140.0	140.0	140.0	140.0	140.0
54"	140.0	140.0	140.0	140.0	140.0	140.0	140.0	140.0	140.0	140.0	140.0	140.0
48"	140.0	140.0	140.0	140.0	140.0	140.0	140.0	140.0	140.0	140.0	140.0	140.0
42"	140.0	140.0	140.0	140.0	140.0	140.0	140.0	140.0	140.0	140.0	140.0	140.0
36"	140.0	140.0	140.0	140.0	140.0	140.0	140.0	140.0	140.0	140.0	140.0	140.0
30"	140.0	140.0	140.0	140.0	140.0	140.0	140.0	140.0	140.0	140.0	140.0	140.0

FRANK L. BENNARDO, P.E.
PE0046549
12/06/2006

ENGINEERING EXPRESS®
160 SW 12th AVENUE, #106
DEERFIELD BEACH, FL 33442
PH: (954) 354-0660 FAX: (954) 354-0443
WWW.ENGEXP.COM
CERT OF AUTH #9885
L. BENNARDO, P.E., INC. INNOVATION

TRACO Windows & Doors Inc.
71 Progress Avenue, Cranberry Township, PA 16166 Tel. (724) 776-7000

ALUMINUM TUBE MULLIONS
LARGE MISSILE IMPACT RESISTANT
MIAMI-DADE NOTICE OF ACCEPTANCE

REMARKS	DRWN	CHKD	DATE
INIT ISSUE	CL	FLB	12/1/06

06-TRA-0004
SCALE: 01
PAGE DESCRIPTION:

3
2

12/06/2006 - 1:29pm clangley F:\01 Project Files\Traco (TRA)\2006 Jobs\06-TRA-0004 Mullions, LMI (NOA)\06-TRA-0004_006 Mullions, LMI (NOA).dwg

ANCHORS TYPE "A"

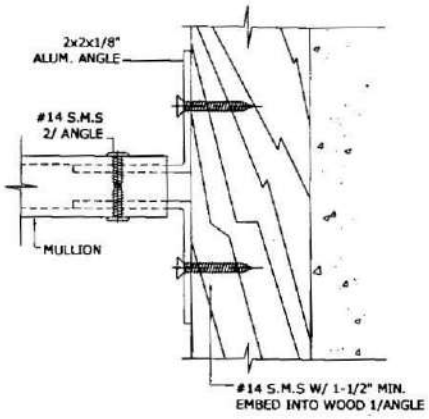

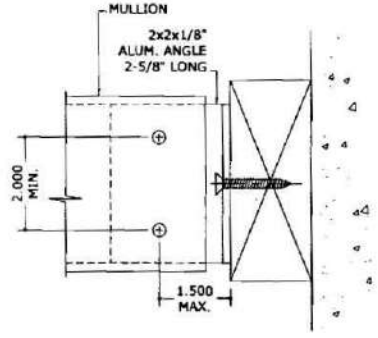

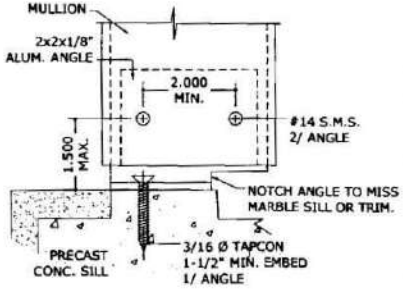

ANCHORS TYPE "B"

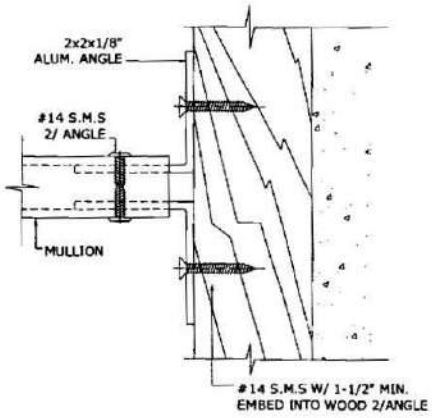

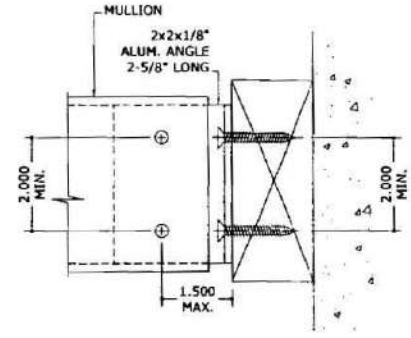

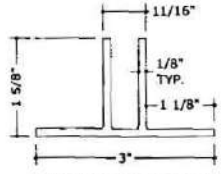

MULLION CLIP

- ALT. TO ANGLES FOR ALL ANCHOR TYPES
- THIS CLIP SHALL FLOAT INSIDE MULLION (NO SIDE FASTENERS REQ'D)

ANCHORS TYPE "C"

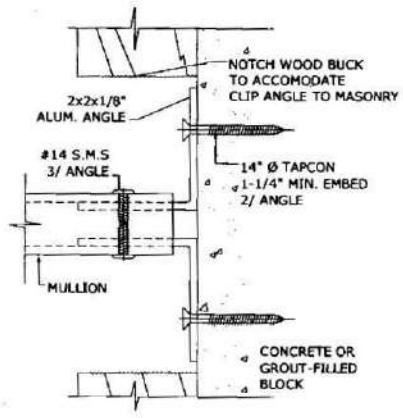

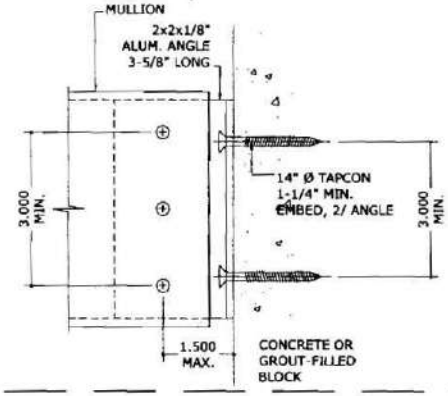

PRODUCT RENEWED
as complying with the Florida Building Code
Acceptance No. 07-0822.06
Expiration Date: JAN. 2, 2012
By: Miami-Dade Product Control Division

PRODUCT REVISED
as complying with the Florida Building Code
Acceptance No. 06-1212.05
Expiration Date: JAN. 2, 2008
By: Miami-Dade Product Control Division

FRANK L. BENNARDO, P.E.
PE0046549
12/06/2006

ENGINEERING EXPRESS®
160 SW 12th AVENUE, #106
DEERFIELD BEACH, FL 33442
PH: (954) 354-0660 FAX: (954) 354-0443
WWW.ENGEXP.COM
CERT. OF AUTH. #8680
L. BENNARDO, P.E., INC. (INNOVATION)

TRACO Windows & Doors Inc.
71 Progress Avenue, Cranberry Township, PA 16066 Tel. (724) 776-7000

ALUMINUM TUBE MULLIONS
LARGE MISSILE IMPACT RESISTANT
MIAMI-DADE NOTICE OF ACCEPTANCE

REMARKS	DRWN	CHKD	DATE
UNIT ISSUE	CL	FLB	12/1/06

06-TRA-0004
SCALE: - 01
PAGE DESCRIPTION:
-
-

3

12/06/2006 - 1:29pm dangley F:\01 Project Files\Traco (TRA)\2006 Jobs\06-TRA-0004 Mullions, LMI (NOA)\06-TRA-0004_Obj Mullions, LMI (NOA).dwg

OK

APPENDIX 13-D

FLORIDA ENERGY EFFICIENCY CODE FOR BUILDING CONSTRUCTION

FORM 600C-04R — Residential Limited Applications Prescriptive Method C — SOUTH 7 8 9

Small Additions, Renovations & Building Systems

Compliance with Method C of Sub-Chapter 6 of the Florida Energy Efficiency Code may be demonstrated by the use of Form 600C-04 for additions of 600 square feet or less, site-installed components of manufactured homes, and renovations to single- and multiple-family residences. Alternative methods are provided for additions by use of Form 600B-04 or 600A-04.

PROJECT NAME: ISHMAN	BUILDER:		
AND ADDRESS: 1404 JACKSON ST HOLLYWOOD FL	PERMITTING OFFICE: HOLLYWOOD	CLIMATE ZONE: 7 ☐ 8 ☒ 9 ☐	
OWNER: ADDITION	PERMIT NO.:	JURISDICTION NO.: 1 6 2 1 0 6	

SMALL ADDITIONS TO EXISTING RESIDENCES (600 square feet or less of conditioned area). Prescriptive requirements in Tables 6C-1, 6C-2, and 6C-3 apply only to the components of the addition, not to the existing building. Space heating, cooling, and water heating equipment efficiency levels must be met only when equipment is installed specifically to serve the addition or is being installed in conjunction with the addition construction. Components seperating unconditioned spaces from conditioned spaces must meet the prescribed minimum insulation levels. RENOVATIONS (Residential buildings undergoing renovations costing more than 30% of the assessed value of the building). Prescriptive requirements in Tables 6C-1 and 6C-2 apply only to the components and equipment being renovated or replaced. MANUFACTURED HOMES AND BUILDINGS. Only site-installed components and features are covered by this form. BUILDING SYSTEMS Comply when complete new system is installed.

	Please Print	CK
1. Renovation, (Addition) New System or Manufactured Home	1. ADDITION	
2. Single-family detached or Multiple-family attached	2. S.F.D.	
3. If Multiple-family—No. of units covered by this submission	3.	
4. Conditioned floor area (sq. ft.)	4. 315	
5. Predominant eave overhang (ft.)	5.	
6. Glass type and area: (a. Clear glass; b. Tint, film or solar screen) — TOTAL GLASS 108; EXISTING REMOVED 75; NET NEW 33	Single Pane / Double Pane 6a. 33 sq. ft. / ____ sq. ft. 6b. ____ sq. ft. / ____ sq. ft.	
7. Percentage of glass to floor area	7. 11 %	
8. Floor type and insulation: (a. Slab-on-grade (R-value); b. Wood, raised (R-value); c. Wood, common (R-value); d. Concrete, raised (R-value); e. Concrete, common (R-value))	8a R = 0 57 lin. ft. 8b. R = ____ ____ sq. ft. 8c. R = ____ ____ sq. ft. 8d. R = ____ ____ sq. ft. 8e. R = ____ ____ sq. ft.	
9. Wall type and insulation: a. Exterior: 1. Masonry (Insulation R-value) 2. Wood frame (Insulation R-value); b. Adjacent: 1. Masonry (Insulation R-value) 2. Wood frame (Insulation R-value); c. Marriage Walls of Multiple Units* (Yes/No)	9a-1 R = 5 456 sq. ft. 9a-2 R = ____ ____ sq. ft. 9b-1 R = ____ ____ sq. ft. 9b-2 R = ____ ____ sq. ft. 9c. ____ ____	
10. Ceiling type and insulation: a. Under attic (Insulation R-value); b. Single assembly (Insulation R-value)	10a. R = 19 315 sq. ft. 10b. R = ____ ____ sq. ft.	
11. Cooling system* (Types: central, room unit, (package terminal A.C.), gas, existing, none)	11. Type: PT SEER/EER: 9.6	
12. Heating system* (Types: heat pump, elec. strip, natural gas, LP-gas, gas h.p., room or PTAC, existing, none)	12. Type: ES HSPF/COP/AFUE: 1	
13. Air distribution system* a. Backflow damper or single package systems* (Yes/No); b. Ducts on marriage walls adequately sealed* (Yes/No)	13a. ____ 13b. ____	
14. Hot water system: (Types: elec., natural gas, other, existing, none)	14. Type: EXISTING EF: ____	

* Pertains to manufactured homes with site-installed components.

I hereby certify that the plans and specifications covered by the calculation are in compliance with the Florida Energy Code.

PREPARED BY: SEQUENZIA DATE: 01-07-08

I hereby certify that this building is in compliance with the Florida Energy Code.

OWNER AGENT: [signature] DATE: 01-07-08

Review of plans and specifications covered by this calculation indicates compliance with the Florida Energy Code. Before construction is completed, this building will be inspected for compliance in accordance with Section 553.908, F.S.

BUILDING OFFICIAL: ____

DATE: ____

Climate Zones 7, 8, 9

TABLE 6C-1: PRESCRIPTIVE REQUIREMENTS FOR SMALL ADDITIONS (600 Sq. Ft. and Less), RENOVATIONS TO EXISTING BUILDINGS AND SITE-INSTALLED COMPONENTS OF MANUFACTURED HOMES

	COMPONENT	MINIMUM INSULATION	INSULATION INSTALLED
WALLS	Concrete Block	R-5	R-5
	Frame, 2' x 4'	R-11	
	Frame, 2' x 6'	R-19	
	Common, Frame	R-11	
	Common, Masonry	R-3	
CEILINGS	Under Attic	R-30	
	Single Assembly; Enclosed		
	Frame	R-19	R-19
	Metal Pans	R-13	
	Single Assembly; Open	R-10	
	Common, Frame	R-11	
FLOORS	Slab-on-grade	No Minimum	0
	Raised Wood	R-11	
	Raised Concrete	R-5	
	Common, Frame	R-11	
DUCT	In unconditioned space	R-6	N/A
	In conditioned space	No minimum	

	EQUIPMENT	MINIMUM EFFICIENCY	INSTALLED EFFICIENCY
COOLING	Central A/C - Split	SEER = 13.0*	SEER =
	- Single Pkg.	SEER = 13.0*	SEER =
	Room unit or PTAC	EER = 8.5*	EER = 9.2
SPACE HEATING	Electric Resistance	ANY	
	Heat pump - Split	HSPF = 7.7*	HSPF =
	- Single Pkg.	HSPF = 7.7*	HSPF =
	Room unit or PTHP	COP = 2.7*	HSPF/COP =
	Gas; natural or propane	AFUE = .78	AFUE =
	Fuel Oil	AFUE = .78	AFUE =
HOT WATER	Electric Resistance	EF = .92	EF = EXISTING
	Gas; natural or LP	EF = .59	EF =
	Fuel Oil	EF = .54	EF =

TABLE 6C-2: PRESCRIPTIVE REQUIREMENTS FOR GLASS AREAS IN ADDITIONS ONLY

* See Table 13-607.1.ABC.3.2 and 13-608.1.ABC.3.2

Maximum percentage glass to floor area allowed is selected by type, overhang length, and solar heat gain coefficient. Maximum % = 20 Installed % = 11

GLASS TYPE, OVERHANG, AND SOLAR HEAT GAIN COEFFICIENT REQUIRED FOR GLASS PERCENTAGE ALLOWED

UP TO 20%		UP TO 30%		UP TO 40%		UP TO 50%	
Single	Double	Single	Double	Single	Double	Single	Double
OH-SHGC	OH-SHGC	OH-SHGC	OH-SHGC	OH-SHGC	OH-SHGC	OH-SHGC	OH-SHGC
1' - .87 0' - .75	0' - .78	2' - .87 1' - .75 0' - .57	1' - .78 0' - .61	3' - .87 2' - .75 1' - .57 0' - .39	2' - .78 1' - .61 0' - .44	4' - .87 3' - .75 2' - .57 1' - .39 0' - .30	3' - .78 2' - .61 1' - .44 0' - .35

Get certified SHGC from the manufacturer or use defaults: Single clear SHGC = .75, double clear SHGC = .66, and single tint SHGC = .64

TABLE 6C-3 MINIMUM REQUIREMENTS FOR ALL PACKAGES

COMPONENTS	SECTION	REQUIREMENTS	CHECK
Exterior Joints & Cracks	606.1	To be caulked, gasketed, weather-stripped or otherwise sealed.	✓
Exterior Windows & Doors	606.1	Max. 0.3 cfm/sq.ft. window area; .5 cfm/sq.ft. door area.	✓
Sole & Top Plates	606.1	Sole plates and penetrations through top plates of exterior walls must be sealed.	✓
Recessed Lighting	606.1	Type IC rated with no penetrations (two alternatives allowed).	✓
Multistory Houses	606.1	Air barrier on perimeter of floor cavity between floors.	NA
Exhaust Fans	606.1	Exhaust fans vented to unconditioned space shall have dampers, except for combustion devices with integral exhaust ductwork.	✓
Combustion Heating	606.1	Combustion space and water heating systems must be provided with outside combustion air, except for direct vent appliances.	NA
Water Heaters	612.1	Comply with efficiency requirements in Table 612.1.ABC.3.2. Switch or clearly marked circuit breaker electric or cutoff (gas) must be provided. External or built-in heat trap required for vertical pipe risers.	EXIST
Swimming Pools & Spas	612.1	Spas & heated pools must have covers (except solar heated). Noncommercial pools must have a pump timer. Gas spa & pool heaters must have minimum thermal efficiency of 78%.	NA
Hot Water Pipes	612.1	Insulation is required for hot water circulating systems (including heat recovery units).	N/A
Shower Heads	612.1	Water flow must be restricted to no more than 2.5 gallons per minute at 80 psig.	✓
HVAC Duct Construction, Insulation & Installation	610.1	All ducts, fittings, mechanical equipment and plenum chambers shall be mechanically attached, sealed, insulated and installed in accordance with the criteria of Section 610.1. Ducts in attics must be insulated to a minimum of R-6.	✓
HVAC Controls	607.1	Separate readily accessible manual or automatic thermostat for each system.	N/A

GENERAL DIRECTIONS:

1. On Table 6C-1 indicate the R-value of the insulation being added to each component and the efficiency levels of the equipment installed. All R-values and efficiencies installed must meet or exceed the minimum values listed. Components and equipment neither being added nor renovated may be left blank.
2. ADDITIONS ONLY. Determine the percentage of new glass to conditioned floor area in the addition as follows. Total the areas of all glass windows, sliding glass doors and glass door panels. Double the area of all nonvertical roof glass and add it to the previous total. When glass in existing exterior walls is being removed or enclosed by the addition, an amount equal to the total area of this glass may be subtracted from the total glass area. Divide the adjusted glass area total by the conditioned floor area of the addition. Multiply by 100 to get the percent. Find the largest glass percentage under which your calculated percentage falls on Table 6C-2. Prescriptives are given by the type of glass (single or double pane) and the overhang (OH) paired with a solar heat gain coefficient (SHGC). For a given glass type and overhang, the minimum solar heat gain coefficient allowed is specified. Actual glass windows and doors previously in the exterior walls of the house and being reinstalled in the addition do not have to comply with the overhang and solar heat gain coefficient requirements on Table 6C-2. All new glass in the addition must meet the requirement for one of the options in the glass percentage category you indicated. The overhang (OH) distance is measured perpendicularly from the face of the glass to a point directly under the outermost edge of the overhang.
3. RENOVATIONS ONLY. Replacement glass needs to meet the following requirements. Any glass type and solar heat gain coefficient may be used for glass areas which are under at least a 2-foot overhang and whose lowest edge does not extend further than 8 feet from the overhang. Glass areas being renovated that do not meet this criteria must be either single-pane tinted, double-pane clear or double-pane tinted.
4. BUILDING SYSTEMS. Comply when new system is installed for system installed.
5. Complete the information requested on the top half of page 1.
6. Read "Minimum Requirements for Small Additions and Renovations," Table 6C-3, and check all applicable items.
7. Read, sign and date the "Owner/Agent" certification statement on page 1.

ROBERT G. ISHMAN P.A.
ARCHITECT
LICENSE NO. AR-0012684 / AA-C001769
2117 HOLLYWOOD BLVD., HOLLYWOOD, FLORIDA 33020
TEL; (954) 929-9695 / FAX; (954) 929-9597

324-B

Date: 1-4-08 Job: Addition to Residence Sheet 1 of 3
1404 JACKSON ST., HOLLYWOOD, FL.

$M = \frac{wl^2}{8} = (22)(7)(14.83^2)(1.5) = 50,804^{in}/\#$ $S = \frac{M}{f_b} = \frac{50,804}{1100\ psi} = 46.2$

f_b for 1100 psi 4x10 = 54.52 $\left(S = \frac{bd^2}{6}\right)$

$V = \left(\frac{3}{2}\right)\left(\frac{1155}{(3.5)(9.5)=33.25}\right)$ 52 < 95 Allowed.

Roof Joist @ open porch (Exposed roof load 40#/ft)

$M = \frac{wl^2}{8} = (40)(2')(10.67^2)(1.5) = 13,662^{in}/\#$ $S = \frac{M}{f_b} = \frac{13,662}{1100\ psi} = 12.42$

f_b for 1100psi 3x8 = 24.6 > 12.42 OK

$V = \left(\frac{3}{2}\right)\left(\frac{534}{3.5 \times 7.5}\right) = 42.72$ OK < 95 allowed

Open Porch Col. footing

$(280\#)\left(\frac{15'}{2}\right) = 2100\# +$ footing = $\frac{2400}{2000\ psf\ soil} = 1.2$ S.F. Required

1.2 S.F. req'd
1.33 S.F. provided OK

2-2x12 wood header beam (worst case) @ enclosed addition

$M = \frac{wl^2}{8} = (65\#)(4.16)(15^2)(1.5) = 91,260^{in}/\#$ $S = \frac{M}{f_b} = \frac{91,260}{2 \times 1100\ psi} = 41.48$

f_b for 2x 1100psi 2x12s = (2)(55.82) @ 70% = 50.15 > 41.48 OK

$V = \left(\frac{3}{2}\right)\left(\frac{2028}{(1.625)(2)(11.5)}\right) = \frac{6084}{74.75} = 81.4$ < 95 allowed OK

ROBERT G. ISHMAN P.A.
ARCHITECT
LICENSE NO. AR-0012684 / AA-C001769
2117 HOLLYWOOD BLVD., HOLLYWOOD, FLORIDA 33020
TEL: (954) 929-9695 / FAX: (954) 929-9597

Date: 1-4-08 Job: Addition to Residence Sheet 2 of 3
1404 JACKSON ST., HOLLYWOOD, FL.

2x12 WOOD Joist @ Enclosed Addition (15' span worst case)

$M = \frac{wl^2}{8} = (65\#)(1.33)(15^2)(1.5) = \frac{29,177}{1100\ psi} = 26.52 < 35.82$ Allowed

DEFLECTION worst Case 4x12

$D = \left(\frac{5}{384}\right)\left(\frac{4200 \times 180^3}{1,400,000 \times 459.42}\right) = .50 < \frac{15 \times 12}{240} = .75$ Exposed
OK

DEFLECTION (worst Case) 2x12's @ 15' span Enclosed Apt.

$D = \left(\frac{5}{384}\right)\left(\frac{1297 \times 180^3}{1,400,000 \times 205.94}\right) = .34 < \frac{15 \times 12}{360} = .50$ Plaster or GWB
OK

Concrete tie beam (worst Case) windows-doors

$M = \frac{wl^2}{8} = (1263)(12^2)(1.5) = 272,808\ "/\#$ OK $d = \sqrt{\frac{272\,808}{1808}}$ 15"

$As = \frac{272,808}{f_s j d} = \frac{272\,808}{244160} = 1.12\ As$ USE 3#6s = 1.32 BOTT. 3#6s TOP.

$v = \frac{V}{bd}$ $r = \frac{7578}{128} = 59.2 < 60$ Allowed (use code for T.B. ☐ spacing)

LOAD ON COLUMNS (WORST CASE) ENCLOSED BLDG
16.42 K Base Pl: 5/8" THK x 10" x 10"
Table AISC Handbook pg 3.40
3" x 3" x 1/4" CARRIES 38K fill w/ concrete for fire rating

OPEN PORCH COLS. (worst case)
2.35 K Use Min of 3" x 3" x 3/16" Base Pl = 1/2" THK x 10" x 10"

ROBERT G. ISHMAN P.A.
ARCHITECT
LICENSE NO. AR-0012684 / AA-C001769
2117 HOLLYWOOD BLVD., HOLLYWOOD, FLORIDA 33020
TEL; (954) 929-9695 / FAX; (954) 929-9597

Date: 1-4-08 Job: Addition to Residence Sheet 3 of 3
1404 JACKSON ST., HOLLYWOOD, FL

COLUMN FOOTING @ Enclosed Addition (worst case)

future 2nd floor Roof + wall loads 775#
future floor load 488#
Total (1263)(13' of bm) =

= 16,419
6 00 assumed footing load
17019# / 2000 psf soil = 8.5 S.F. Required
OK 9.0 S.F. Provided

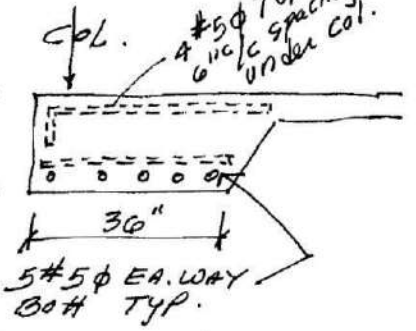

WALL FOOTING @ Enclosed Add. (worst case)

Future 2nd floor Roof + wall	775#
Roof - future 2nd floor load	488#
1ST Floor wall	600#
1ST Floor Tie bm	100#
footing assumed	200#
	2163#

2163# / 2000 psf soil = 1.08 SF. Required
OK 1.33 provided

STEEL BEAM DESIGN for future 2nd floor

Load on beam 1263# / foot (x) 15' span =

$M = \frac{wL^2}{8} = (1263)(15^2)(1.5) = 426,623$ in/# $S = \frac{M}{f} = \frac{426,623}{24,000}$

OK S = 17.76
OK S = 10 x 19# WF 18.8
ALT 12x19 = 21.3

$f_v = \frac{V}{dt} = \frac{9473}{10 \times .250} = 3789$ < 14,500 allowed OK

$D = \left(\frac{5}{384}\right)\left(\frac{18945 \times (15 \times 12)^3}{29,000,000 \times 96.3}\right) = .515$ actual. OK

$D = \frac{\text{coefficient}}{\text{depth}} = \frac{5.580}{10} = .558$ allowed

Project : Addition to residence
Location: 1404 Jackson St., Hollywood, Fl

By: Rob't Ishman arch.

TIME: 08:44 AM
DATE: 01-06-2008

32403

MASONRY MATERIAL : Hollow Core Concrete Masonry Units
MORTAR TYPE : Type S
MORTAR MATERIAL : Portland Cement Lime Mortar
BLOCK PLACEMENT : Running Bond

MASONRY WALL DATA:

Wall Height	=	8.67 ft.
Nominal Wall Thickness	=	8.00 in.
Depth to c.g. Steel, Wall	=	3.81 in.
Parapet Height	=	0.00 ft.
Nominal Parapet Thickness	=	0.00 in.
Depth to c.g. Steel, Parapet	=	0.00 in.
Design Strip Width	=	48.00 in.

Main Wall Reinf. Layers = One Layer
Wall Grout Spacing = Partially Grouted

Support Type at Base = Fixed Support
Span Type = Cantilever Wall (Fixed Base)

WALL LOADS:

Wall Weight	=	65.00 psf.
Floor or Roof Load: Dead	=	360.0 Lb
Live	=	480.0 Lb
Eccentricity	=	0.00 in.
Additional Vertical Load: Dead	=	0.0 Lb
Live	=	0.0 Lb
Eccentricity	=	0.00 in.
Vertical Distance (y)	=	0.00 ft.
Equivalent Fluid Pressure	=	0.00 pcf.
Vertical Distance (x)	=	0.00 ft.

SEISMIC LOADS:

Site Class (A to F)	=	Class A
Seismic Use Group	=	I
Short Period Spectral Acceleration, Ss	=	0.00 %
One Second Spectral Acceleration, S1	=	< 0.75 g
(Computed) Design Category,	=	Category A
Parapet Component Importance Factor, Ip	=	1
Parapet Height/Roof Height Ratio z/h	=	0
Veneer Weight	=	0.00 psf.
Seismic Load on Main Wall*	=	26.00 psf.

* Minimum Code Required Value

Seismic Load on Parapet Wall	=	0.00 psf.

WIND LOADS:

	Load W or H	Magnitude (plf, lb)	Distance From Base of Wall (ft) Start	End
1	W	49.77	0.00	8.67
2				
3				
4				
5				

Notes: 1. "W" designates a uniform distributed wind load.
"H" designates a concentrated horizontal wind load.
2. Horizontal loads are positive to the right.

MASONRY DATA:

Masonry Unit Strength		=	1900.00 psi.
Masonry Compressive Strength,	f'm	=	1500.00 psi.
Allowable Flexural Stress,	Fb	=	500.00 psi.
Allowable Shear Stress,	Fv	=	38.73 psi.
Allowable Tension: No Grout,	Ft	=	25.00 psi.
Solid Grout,	Ft	=	68.00 psi.
Modulus of Elasticity,	Em	=	1,350 ksi.
Modular Ratio, Es/Em =	n	=	21.48
Single Grouted Cell + Web Width		=	8.00 in.
Nominal Length of Masonry Unit		=	16.00 in.
Block Face Shell Thickness		=	1.25 in.
Nominal Minus Actual Thickness		=	0.38 in.

MATERIAL DATA:

Steel Yield Strength,	Fy	=	60.00 ksi.
Allowable Steel Stress,	Fs	=	24.00 ksi.
Modulus of Elasticity,	Es	=	29,000 ksi.

REINFORCED WALL DATA:

Minimum Steel Ratio, As/bt = 0.0007

GRAPHIC SUMMARY OF MASONRY WALL DATA

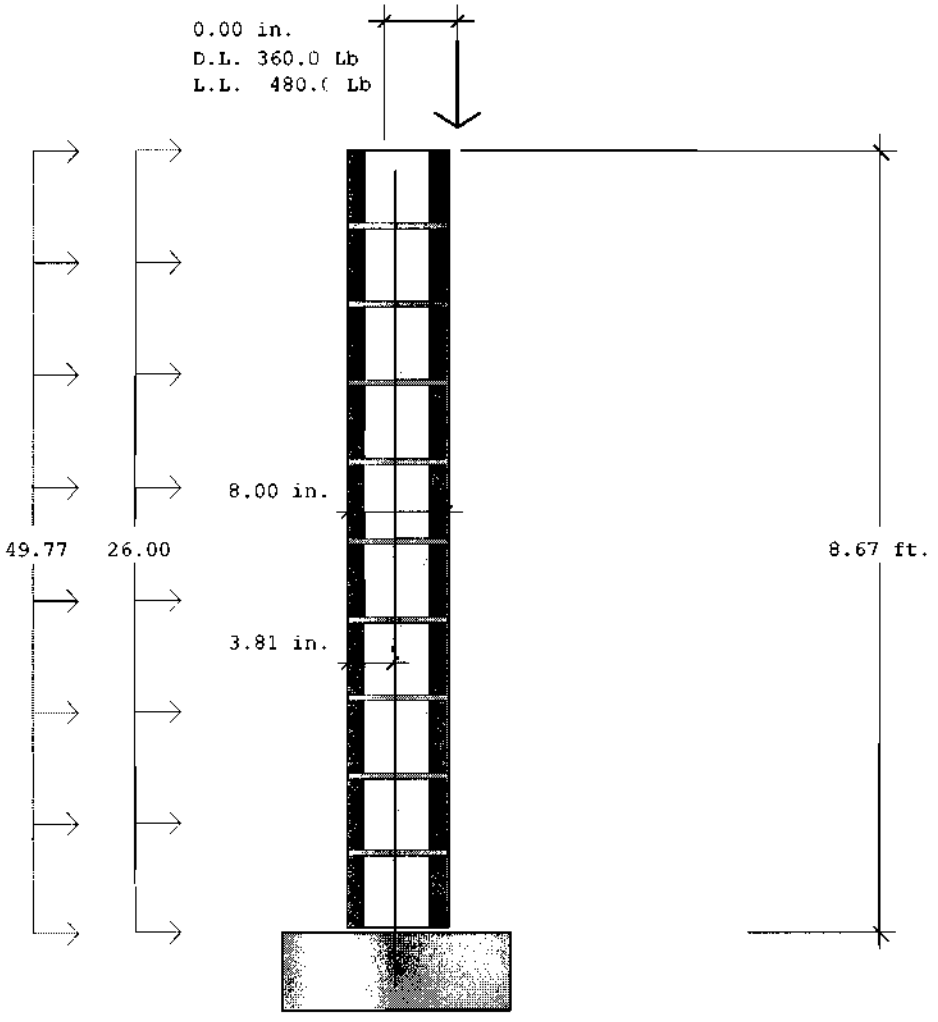

****
SUMMARY OF RESULTS
FOR MAIN WALL
****

DESIGN LOADS:

Moment, Ms = -1,870.6 ft-lb / 48.00 in.
Axial Load, Ps = 2,614.2 Lb / 48.00 in.
Load Combination = 1*DL+1*WL
Eccentricity at Moment, e = M/P = 8.59 in.

NOTE: Max. moment is located in Zone C, (e > 2d/3)
Wall is cracked, steel is stressed in tension.

Max. Shear, Vs = 481.5 Lb / 48.00 in.
Load Combination = 1*DL+1*WL

ANALYSIS RESULTS:

Design Strip Width = 48.00 in.
Actual Wall Thickness, t = 7.63 in.
Effective Height, h' = 17.34 ft.
Seismic Force, (IBC 2000 1620.1.7) Fp = 26.00 plf. / 48.00 in.

Minimum Area of Steel, Vertical Reinf. = 0.256 in.^2 / 48.00 in.
Minimum Area of Steel, Horiz. Reinf. = Not Required

Ref. ACI 99 1.11/IBC 2000 2109.6.5

DESIGN RESULTS:

Bar Size	Fa, psi (4/3*.25*f'm*R)	fv, psi (V/b'd)	All. Moment @ Axial Load (P=2,614.2 lb)	Bar Spa. (in. o.c.)
#3	321.55	4.72	3,811.3	16.00
#4	353.61	9.43	3,54?.3	32.00
#5	365.75	16.50	3,22?.7	56.00
#6	365.75	21.22	3,42?.5	72.00
#7	365.75	21.22	3,88?.2	72.00
#8	365.75	21.22	4,21?.0	72.00
#9	365.75	21.22	4,47?.3	72.00

Max. vertical bar spacing is 72 inch per ACI 99 2.3.3.3 (commentary)

Project : Addition to residence
Location: 1404 Jackson St., Hollywood, Fl

By: Rob't Ishman arch.

TIME: 08:46 AM
DATE: 01-06-2008

MASONRY WALL INTERACTION DIAGRAM: (DEAD + LIVE LOAD ONLY)

Effective Wall Height = 17.34 ft. Solid Masonry Area, Ae = 138.00 in^2
Actual Wall Thickness = 7.63 in. All. Axial Stress, Fa = 274.31 psi.
Depth to c.g. Steel = 3.81 in. All. Bending Stress, Fb = 500.00 psi.
Design Width = 48.00 in. All. Steel Stress, Fs = 24.00 ksi.
Reinforcing Design = #5 @ 56 in. o.c.

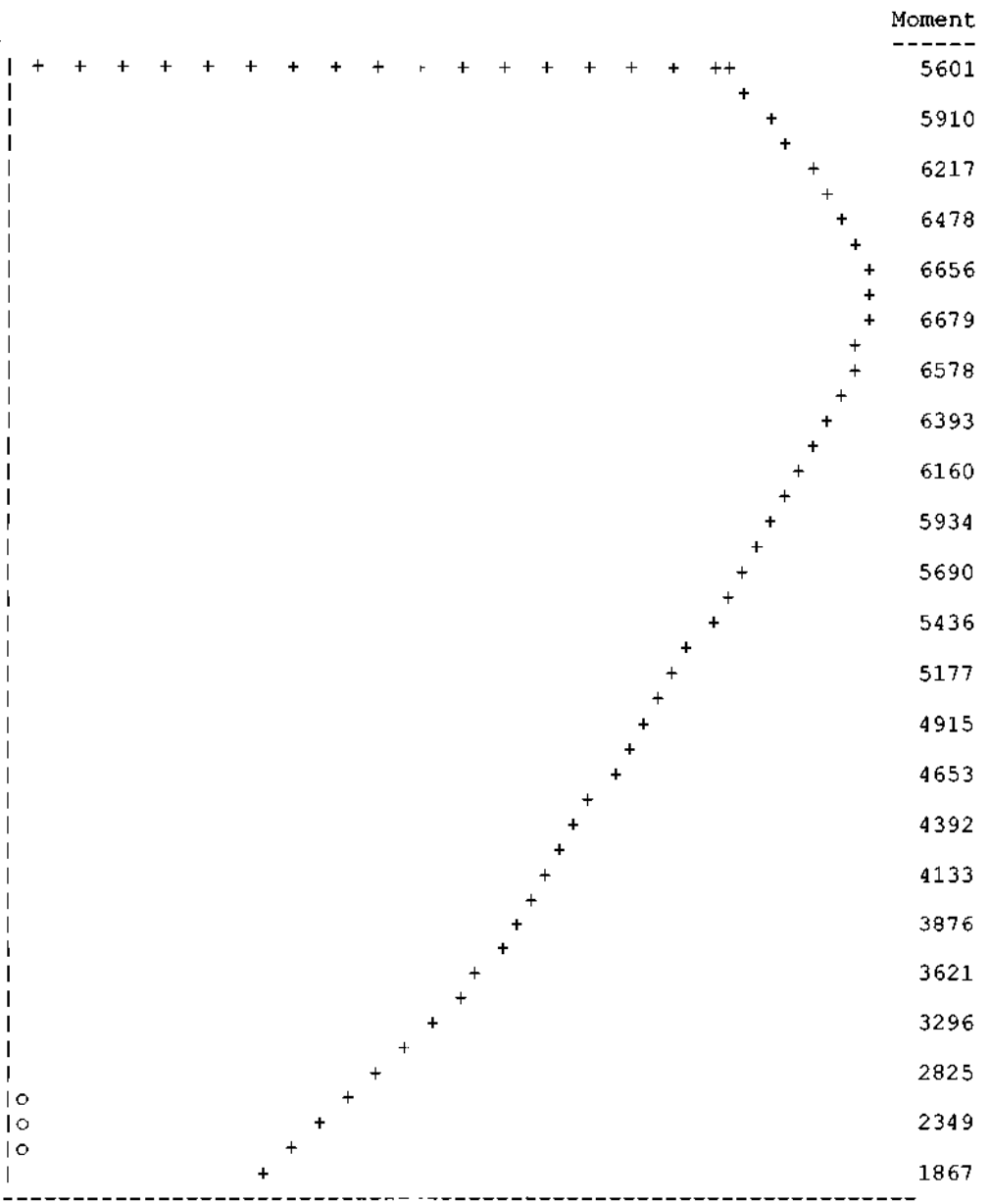

NOTES: Axial Load = Lb, Moment = ft-lb
+ = Moment Capacity
o = Applied Moment

Positive moment is defined as moment which causes compression on the outside face of wall.

Project : Addition to residence
Location: 1404 Jackson St., Hollywood, Fl
By: Rob't Ishman arch.

TIME: 08:46 AM
DATE: 01-06-2008

MASONRY WALL INTERACTION DIAGRAM: (WIND / SEISMIC LOADS)

Effective Wall Height = 17.34 ft.
Actual Wall Thickness = 7.63 in.
Depth to c.g. Steel = 3.81 in.
Design Width = 48.00 in.
Reinforcing Design = #5 @ 56 in. o.c.

Solid Masonry Area, Ae = 138.00 in^2
All. Axial Stress, Fa = 365.75 psi.
All. Bending Stress, Fb = 666.67 psi.
All. Steel Stress, Fs = 32.00 ksi.

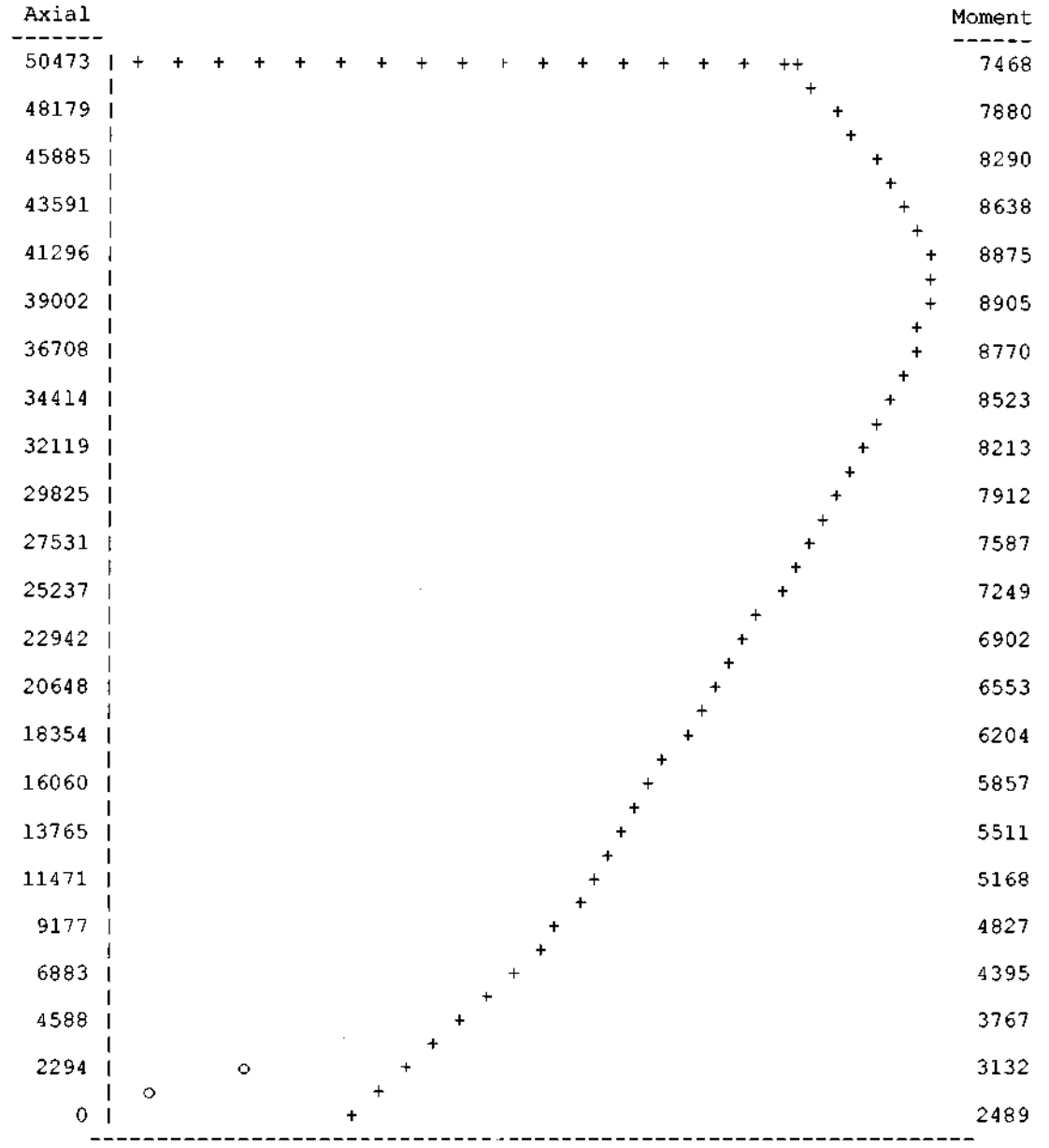

NOTES: Axial Load = Lb, Moment = ft-lb
+ = Moment Capacity
o = Applied Moment

Positive moment is defined as moment which causes compression on the outside face of wall.

Project : Addition to residence
Location: 1404 Jackson St., Hollywood, Fl
By: Rob't Ishman arch.

TIME: 08:46 AM
DATE: 01-06-2008

DETAILED RESULTS FOR MAIN WALL:

LOAD COMBINATION : 1*DL+1*LL
REBAR DESIGN : #5 @ 56 in. o.c.
FURNISHED AREA OF STEEL : 0.266 in^2 / 48.00 in.
MINIMUM AREA OF STEEL : 0.256 in^2 / 48.00 in.

No.	Dist From Bot (ft)	Mom. (ft-lb)	Axial (lbs)	Shear (lbs)
0	8.67	0.0	840.0	0.0
1	7.80	0.0	1,065.4	0.0
2	6.94	0.0	1,290.8	0.0
3	6.07	0.0	1,516.3	0.0
4	5.20	0.0	1,741.7	0.0
5	4.34	0.0	1,967.1	0.0
6	3.47	0.0	2,192.5	0.0
7	2.60	0.0	2,417.9	0.0
8	1.73	0.0	2,643.4	0.0
9	0.87	0.0	2,868.8	0.0
10	0.00	0.0	3,094.2	0.0

WALL PROPERTIES:

Effective Flange Width bf = 41.14 in. / 48.00 in.
Effective Grouted Core Width, b' = 6.86 in. / 48.00 in.

Solid Masonry Area, Ae = 138.00 in.^2 / 48.00 in.
Gross Moment of Inertia, Ig = 1135.3 in.^4 / 48.00 in.
Section Modulus, S = 2*Ig/t = 297.80 in.^3 / 48.00 in.
Radius of Gyration, r = 2.868 in. / 48.00 in.
Slenderness Factor, h'/r = 72.54

ALLOWABLE STRESSES:

Allowable Axial Stress, Fa = 274.31 psi.
Allowable Bending Stress, Fb = 500.00 psi.
Allowable Shear Stress, Fv = 38.73 psi.
Allowable Steel Stress, Fs = 24000.00 psi.

Project : Addition to residence
Location: 1404 Jackson St., Hollywood, Fl By: Rob't Ishman arch.

TIME: 08:46 AM
DATE: 01-06-2008

DETAILED RESULTS FOR MAIN WALL:

LOAD COMBINATION : 1*DL+1*LL+1*WL
REBAR DESIGN : #5 @ 56 in. o.c.
FURNISHED AREA OF STEEL : 0.266 in^2 / 48.00 in.
MINIMUM AREA OF STEEL : 0.256 in^2 / 48.00 in.

No.	Dist From Bot (ft)	Mom. (ft-lb)	Axial (lbs)	Shear (lbs)
0	8.67	0.0	840.0	0.0
1	7.80	-18.7	1,065.4	43.2
2	6.94	-74.8	1,290.8	86.3
3	6.07	-168.4	1,516.3	129.5
4	5.20	-299.3	1,741.7	172.6
5	4.34	-467.6	1,967.1	215.8
6	3.47	-673.4	2,192.5	258.9
7	2.60	-916.6	2,417.9	302.1
8	1.73	-1,197.2	2,643.4	345.2
9	0.87	-1,515.2	2,868.8	388.4
10	0.00	-1,870.6	3,094.2	431.5

WALL PROPERTIES:

Effective Flange Width bf = 41.14 in. / 48.00 in.
Effective Grouted Core Width, b' = 6.86 in. / 48.00 in.

Solid Masonry Area, Ae = 138.00 in.^2 / 48.00 in.
Gross Moment of Inertia, Ig = 1135.3 in.^4 / 48.00 in.
Section Modulus, S = 2*Ig/t = 297.80 in.^3 / 48.00 in.
Radius of Gyration, r = 2.868 in. / 48.00 in.
Slenderness Factor, h'/r = 72.54

ALLOWABLE STRESSES:

Allowable Axial Stress, Fa = 365.75 psi.
Allowable Bending Stress, Fb = 666.67 psi.
Allowable Shear Stress, Fv = 51.64 psi.
Allowable Steel Stress, Fs = 32000.00 psi.

Project : Addition to residence
Location: 1404 Jackson St., Hollywood, Fl By: Rob't Ishman arch.

TIME: 08:46 AM
DATE: 01-06-2008

DETAILED RESULTS FOR MAIN WALL:

LOAD COMBINATION : 1*DL+1*LL+1*E
REBAR DESIGN : #5 @ 56 in. o.c.
FURNISHED AREA OF STEEL : 0.266 in^2 / 48.00 in.
MINIMUM AREA OF STEEL : 0.256 in^2 / 48.00 in.

No.	Dist From Bot (ft)	Mom. (ft-lb)	Axial (lbs)	Shear (lbs)
0	8.67	0.0	840.0	0.0
1	7.80	-9.8	1,065.4	22.5
2	6.94	-39.1	1,290.8	45.1
3	6.07	-87.9	1,516.3	67.6
4	5.20	-156.4	1,741.7	90.2
5	4.34	-244.3	1,967.1	112.7
6	3.47	-351.8	2,192.5	135.3
7	2.60	-478.8	2,417.9	157.8
8	1.73	-625.4	2,643.4	180.3
9	0.87	-791.5	2,868.8	202.9
10	0.00	-977.2	3,094.2	225.4

WALL PROPERTIES:

Effective Flange Width bf = 41.14 in. / 48.00 in.
Effective Grouted Core Width, b' = 6.86 in. / 48.00 in.

Solid Masonry Area, Ae = 138.00 in.^2 / 48.00 in.
Gross Moment of Inertia, Ig = 1135.3 in.^4 / 48.00 in.
Section Modulus, S = 2*Ig/t = 297.80 in.^3 / 48.00 in.
Radius of Gyration, r = 2.868 in. / 48.00 in.
Slenderness Factor, h'/r = 72.54

ALLOWABLE STRESSES:

Allowable Axial Stress, Fa = 365.75 psi.
Allowable Bending Stress, Fb = 666.67 psi.
Allowable Shear Stress, Fv = 51.64 psi.
Allowable Steel Stress, Fs = 32000.00 psi.

Project : Addition to residence
Location: 1404 Jackson St., Hollywood, Fl
By: Rob't Ishman arch.

TIME: 08:46 AM
DATE: 01-06-2008

DETAILED RESULTS FOR MAIN WALL:

LOAD COMBINATION : 1*DL+1*WL
REBAR DESIGN : #5 @ 56 in. o.c.
FURNISHED AREA OF STEEL : 0.266 in^2 / 48.00 in.
MINIMUM AREA OF STEEL : 0.256 in^2 / 48.00 in.

No.	Dist From Bot (ft)	Mom. (ft-lb)	Axial (lbs)	Shear (lbs)
0	8.67	0.0	360.0	0.0
1	7.80	-18.7	585.4	43.2
2	6.94	-74.8	810.8	86.3
3	6.07	-168.4	1,036.3	129.5
4	5.20	-299.3	1,261.7	172.6
5	4.34	-467.6	1,487.1	215.8
6	3.47	-673.4	1,712.5	258.9
7	2.60	-916.6	1,937.9	302.1
8	1.73	-1,197.2	2,163.4	345.2
9	0.87	-1,515.2	2,388.8	388.4
10	0.00	-1,870.6	2,614.2	431.5

WALL PROPERTIES:

Effective Flange Width bf = 41.14 in. / 48.00 in.
Effective Grouted Core Width, b' = 6.86 in. / 48.00 in.

Solid Masonry Area, Ae = 138.00 in.^2 / 48.00 in.
Gross Moment of Inertia, Ig = 1135.3 in.^4 / 48.00 in.
Section Modulus, S = 2*Ig/t = 297.80 in.^3 / 48.00 in.
Radius of Gyration, r = 2.868 in. / 48.00 in.
Slenderness Factor, h'/r = 72.54

ALLOWABLE STRESSES:

Allowable Axial Stress, Fa = 365.75 psi.
Allowable Bending Stress, Fb = 666.67 psi.
Allowable Shear Stress, Fv = 51.64 psi.
Allowable Steel Stress, Fs = 32000.00 psi.

DETAILED RESULTS FOR MAIN WALL:

LOAD COMBINATION : 0.9*DL+1*E
REBAR DESIGN : #5 @ 56 in. o.c.
FURNISHED AREA OF STEEL : 0.266 in^2 / 48.00 in.
MINIMUM AREA OF STEEL : 0.256 in^2 / 48.00 in.

No.	Dist From Bot (ft)	Mom. (ft-lb)	Axial (lbs)	Shear (lbs)
0	8.67	0.0	324.0	0.0
1	7.80	-9.8	526.9	22.5
2	6.94	-39.1	729.8	45.1
3	6.07	-87.9	932.6	67.6
4	5.20	-156.4	1,135.5	90.2
5	4.34	-244.3	1,338.4	112.7
6	3.47	-351.8	1,541.3	135.3
7	2.60	-478.8	1,744.1	157.8
8	1.73	-625.4	1,947.0	180.3
9	0.87	-791.5	2,149.9	202.9
10	0.00	-977.2	2,352.8	225.4

WALL PROPERTIES:

Effective Flange Width bf = 41.14 in. / 48.00 in.
Effective Grouted Core Width, b' = 6.86 in. / 48.00 in.

Solid Masonry Area, Ae = 138.00 in.^2 / 48.00 in.
Gross Moment of Inertia, Ig = 1135.3 in.^4 / 48.00 in.
Section Modulus, S = 2*Ig/t = 297.80 in.^3 / 48.00 in.
Radius of Gyration, r = 2.868 in. / 48.00 in.
Slenderness Factor, h'/r = 72.54

ALLOWABLE STRESSES:

Allowable Axial Stress, Fa = 365.75 psi.
Allowable Bending Stress, Fb = 666.67 psi.
Allowable Shear Stress, Fv = 51.64 psi.
Allowable Steel Stress, Fs = 32000.00 psi.

FLORIDA ENERGY EFFICIENCY CODE FOR BUILDING CONSTRUCTION

FORM 600C-04R — Residential Limited Applications Prescriptive Method C — SOUTH 7 8 9

Small Additions, Renovations & Building Systems

Compliance with Method C of Sub-Chapter 6 of the Florida Energy Efficiency Code may be demonstrated by the use of Form 600C-04 for additions of 600 square feet or less, site-installed components of manufactured homes, and renovations to single- and multiple-family residences. Alternative methods are provided for additions by use of Form 600B-04 or 600A-04.

PROJECT NAME AND ADDRESS: ISHMAN 1404 JACKSON ST HOLLYWOOD FL	BUILDER:		CLIMATE ZONE: 7 ☐ 8 ☒ 9 ☐
OWNER: ADDITION	PERMITTING OFFICE: HOLLYWOOD	PERMIT NO.:	JURISDICTION NO.: 1 6 2 1 0 6

SMALL ADDITIONS TO EXISTING RESIDENCES (600 square feet or less of conditioned area). Prescriptive requirements in Tables 6C-1, 6C-2, and 6C-3 apply only to the components of the addition, not to the existing building. Space heating, cooling, and water heating equipment efficiency levels must be met only when equipment is installed specifically to serve the addition or is being installed in conjunction with the addition construction. Components seperating unconditioned spaces from conditioned spaces must meet the prescribed minimum insulation levels. RENOVATIONS (Residential buildings undergoing renovations costing more than 30% of the assessed value of the building). Prescriptive requirements in Tables 6C-1 and 6C-2 apply only to the components and equipment being renovated or replaced. MANUFACTURED HOMES AND BUILDINGS. Only site-installed components and features are covered by this form. BUILDING SYSTEMS Comply when complete new system is installed.

	Please Print	CK
1. Renovation, (Addition) New System or Manufactured Home	1. ADDITION	
2. Single-family detached or Multiple-family attached	2. SFD	
3. If Multiple-family–No. of units covered by this submission	3.	
4. Conditioned floor area (sq. ft.)	4. 315	
5. Predominant eave overhang (ft.)	5.	
6. Glass type and area: (a. Clear glass; b. Tint, film or solar screen) — TOTAL GLASS 108 / EXISTING REMOVED 75 / NET NEW 33	Single Pane / Double Pane 6a. 33 sq. ft. ____ sq. ft. 6b. ____ sq. ft. ____ sq. ft.	
7. Percentage of glass to floor area	7. 11 %	
8. Floor type and insulation: (a. Slab-on-grade (R-value); b. Wood, raised (R-value); c. Wood, common (R-value); d. Concrete, raised (R-value); e. Concrete, common (R-value))	8a R = 0 57 lin. ft. 8b. R = ____ ____ sq. ft. 8c. R = ____ ____ sq. ft. 8d. R = ____ ____ sq. ft. 8e. R = ____ ____ sq. ft.	
9. Wall type and insulation: a. Exterior: 1. Masonry (Insulation R-value) 2. Wood frame (Insulation R-value); b. Adjacent: 1. Masonry (Insulation R-value) 2. Wood frame (Insulation R-value); c. Marriage Walls of Multiple Units* (Yes/No)	9a-1 R = 5 456 sq. ft. 9a-2 R = ____ ____ sq. ft. 9b-1 R = ____ ____ sq. ft. 9b-2 R = ____ ____ sq. ft. 9c. ____ ____	
10. Ceiling type and insulation: a. Under attic (Insulation R-value); b. Single assembly (Insulation R-value)	10a. R = 19 315 sq. ft. 10b. R = ____ ____ sq. ft.	
11. Cooling system* (Types: central, room unit, package terminal A.C., gas, existing, none)	11. Type: PT SEER/EER: 9.6	
12. Heating system* (Types: heat pump, elec. strip, natural gas, LP-gas, gas h.p., room or PTAC, existing, none)	12. Type: ES HSPF/COP/AFUE: 1	
13. Air distribution system*: a. Backflow damper or single package systems* (Yes/No); b. Ducts on marriage walls adequately sealed* (Yes/No)	13a. ____ 13b. ____	
14. Hot water system: (Types: elec., natural gas, other, existing, none)	14. Type: EXISTING EF: ____	

* Pertains to manufactured homes with site-installed components.

I hereby certify that the plans and specifications covered by the calculation are in compliance with the Florida Energy Code.

PREPARED BY: SEQUENZIA DATE: 01-07-08

I hereby certify that this building is in compliance with the Florida Energy Code:

OWNER AGENT: [signature] DATE: 01-07-08

Review of plans and specifications covered by this calculation indicates compliance with the Florida Energy Code. Before construction is completed, this building will be inspected for compliance in accordance with Section 553.908, F.S.

BUILDING OFFICIAL: ____

DATE: ____

Climate Zones 7, 8, 9

TABLE 6C-1: PRESCRIPTIVE REQUIREMENTS FOR SMALL ADDITIONS (600 Sq. Ft. and Less), RENOVATIONS TO EXISTING BUILDINGS AND SITE-INSTALLED COMPONENTS OF MANUFACTURED HOMES

	COMPONENT	MINIMUM INSULATION	INSULATION INSTALLED
WALLS	Concrete Block	R-5	R-5
	Frame, 2" x 4"	R-11	
	Frame, 2" x 6"	R-19	
	Common, Frame	R-11	
	Common, Masonry	R-3	
CEILINGS	Under Attic	R-30	
	Single Assembly; Enclosed		
	Frame	R-19	R-19
	Metal Pans	R-13	
	Single Assembly; Open	R-10	
	Common, Frame	R-11	
FLOORS	Slab-on-grade	No Minimum	0
	Raised Wood	R-11	
	Raised Concrete	R-5	
	Common, Frame	R-11	
DUCT	In unconditioned space	R-6	N/A
	In conditioned space	No minimum	

	EQUIPMENT	MINIMUM EFFICIENCY	INSTALLED EFFICIENCY
COOLING	Central A/C - Split	SEER = 13.0*	SEER =
	- Single Pkg.	SEER = 13.0*	SEER =
	Room unit or PTAC	EER = 8.5*	EER = 9.6
SPACE HEATING	Electric Resistance	ANY	
	Heat pump - Split	HSPF = 7.7*	HSPF =
	- Single Pkg.	HSPF = 7.7*	HSPF =
	Room unit or PTHP	COP = 2.7*	HSPF/COP =
	Gas; natural or propane	AFUE = .78	AFUE =
	Fuel Oil	AFUE = .78	AFUE =
HOT WATER	Electric Resistance	EF = .92	EF = EXISTING
	Gas; natural or LP	EF = .59	EF =
	Fuel Oil	EF = .54	EF =

TABLE 6C-2: PRESCRIPTIVE REQUIREMENTS FOR GLASS AREAS IN ADDITIONS ONLY

* See Table 13-607.1.ABC.3.2 and 13-608.1.ABC.3.2

Maximum percentage glass to floor area allowed is selected by type, overhang length, and solar heat gain coefficient. Maximum % = 20 Installed % = 11

GLASS TYPE, OVERHANG, AND SOLAR HEAT GAIN COEFFICIENT REQUIRED FOR GLASS PERCENTAGE ALLOWED

UP TO 20%		UP TO 30%		UP TO 40%		UP TO 50%	
Single	Double	Single	Double	Single	Double	Single	Double
OH-SHGC	OH-SHGC	OH-SHGC	OH-SHGC	OH-SHGC	OH-SHGC	OH-SHGC	OH-SHGC
1' - .87	0' - .78	2' - .87	1' - .78	3' - .87	2' - .78	4' - .87	3' - .78
0' - .75		1' - .75	0' - .61	2' - .75	1' - .61	3' - .75	2' - .61
		0' - .57		1' - .57	0' - .44	2' - .57	1' - .44
				0' - .39		1' - .39	0' - .35
						0' - .30	

Get certified SHGC from the manufacturer or use defaults: Single clear SHGC = .75, double clear SHGC = .66, and single tint SHGC = .64

TABLE 6C-3 MINIMUM REQUIREMENTS FOR ALL PACKAGES

COMPONENTS	SECTION	REQUIREMENTS	CHECK
Exterior Joints & Cracks	606.1	To be caulked, gasketed, weather-stripped or otherwise sealed.	✓
Exterior Windows & Doors	606.1	Max. 0.3 cfm/sq.ft. window area; .5 cfm/sq.ft. door area.	✓
Sole & Top Plates	606.1	Sole plates and penetrations through top plates of exterior walls must be sealed.	✓
Recessed Lighting	606.1	Type IC rated with no penetrations (two alternatives allowed).	✓
Multistory Houses	606.1	Air barrier on perimeter of floor cavity between floors.	NA
Exhaust Fans	606.1	Exhaust fans vented to unconditioned space shall have dampers, except for combustion devices with integral exhaust ductwork.	✓
Combustion Heating	606.1	Combustion space and water heating systems must be provided with outside combustion air, except for direct vent appliances.	NA
Water Heaters	612.1	Comply with efficiency requirements in Table 612.1.ABC.3.2. Switch or clearly marked circuit breaker electric or cutoff (gas) must be provided. External or built-in heat trap required for vertical pipe risers.	EXIST
Swimming Pools & Spas	612.1	Spas & heated pools must have covers (except solar heated). Noncommercial pools must have a pump timer. Gas spa & pool heaters must have minimum thermal efficiency of 78%.	NA
Hot Water Pipes	612.1	Insulation is required for hot water circulating systems (including heat recovery units).	N/A
Shower Heads	612.1	Water flow must be restricted to no more than 2.5 gallons per minute at 80 psig.	✓
HVAC Duct Construction, Insulation & Installation	610.1	All ducts, fittings, mechanical equipment and plenum chambers shall be mechanically attached, sealed, insulated and installed in accordance with the criteria of Section 610.1. Ducts in attics must be insulated to a minimum of R-6.	✓
HVAC Controls	607.1	Separate readily accessible manual or automatic thermostat for each system.	N/A

GENERAL DIRECTIONS:

1. On Table 6C-1 indicate the R-value of the insulation being added to each component and the efficiency levels of the equipment installed. All R-values and efficiencies installed must meet or exceed the minimum values listed. Components and equipment neither being added nor renovated may be left blank.
2. ADDITIONS ONLY. Determine the percentage of new glass to conditioned floor area in the addition as follows. Total the areas of all glass windows, sliding glass doors and glass door panels. Double the area of all nonvertical roof glass and add it to the previous total. When glass in existing exterior walls is being removed or enclosed by the addition, an amount equal to the total area of this glass may be subtracted from the total glass area. Divide the adjusted glass area total by the conditioned floor area of the addition. Multiply by 100 to get the percent. Find the largest glass percentage under which your calculated percentage falls on Table 6C-2. Prescriptives are given by the type of glass (single or double pane) and the overhang (OH) paired with a solar heat gain coefficient (SHGC). For a given glass type and overhang, the minimum solar heat gain coefficient allowed is specified. Actual glass windows and doors previously in the exterior walls of the house and being reinstalled in the addition do not have to comply with the overhang and solar heat gain coefficient requirements on Table 6C-2. All new glass in the addition must meet the requirement for one of the options in the glass percentage category you indicated. The overhang (OH) distance is measured perpendicularly from the face of the glass to a point directly under the outermost edge of the overhang.
3. RENOVATIONS ONLY. Replacement glass needs to meet the following requirements. Any glass type and solar heat gain coefficient may be used for glass areas which are under at least a 2-foot overhang and whose lowest edge does not extend further than 8 feet from the overhang. Glass areas being renovated that do not meet this criteria must be either single-pane tinted, double-pane clear or double-pane tinted.
4. BUILDING SYSTEMS. Comply when new system is installed for system installed.
5. Complete the information requested on the top half of page 1.
6. Read "Minimum Requirements for Small Additions and Renovations," Table 6C-3, and check all applicable items.
7. Read, sign and date the "Owner/Agent" certification statement on page 1.

Project Summary
Entire House
PREPARED FOR R G ISHMAN ARCHITECT

Job: #2136-1436
Date: 1/7/2008
By: SEQUENZIA

2117 HOLLYWOOD BLVD, HOLLYWOOD, FL 33320 Phone: 954 929 9895

Project Information

For: ADDITION TO SINGLE FAMILY RESIDECE
1404 JACKSON STREET, HOLLYWOOD, FL 33020

Notes: PREPARED FOR JURISDICTION #162100 SOUTH #8

APR 14 2008

Design Information

Weather: Fort Lauderdale/Hollywood, FL, US

Winter Design Conditions

Outside db	50	°F
Inside db	70	°F
Design TD	20	°F

Summer Design Conditions

Outside db	90	°F
Inside db	75	°F
Design TD	15	°F
Daily range	L	
Relative humidity	50	%
Moisture difference	61	gr/lb

Heating Summary

Building heat loss	6242	Btuh
Ventilation air	27	cfm
Ventilation air loss	591	Btuh
Design heat load	6834	Btuh

Infiltration

Method	Simplified
Construction quality	Average
Fireplaces	0

	Heating	Cooling
Area (ft²)	315	315
Volume (ft³)	2520	2520
Air changes/hour	1.05	0.55
Equiv. AVF (cfm)	44	23

Sensible Cooling Equipment Load Sizing

Structure	11475	Btuh
Ventilation	443	Btuh
Design temperature swing	3.0	°F
Use mfg. data	y	
Rate/swing multiplier	1.00	
Total sens. equip. load	11919	Btuh

Latent Cooling Equipment Load Sizing

Internal gains	0	Btuh
Ventilation	1124	Btuh
Infiltration	965	Btuh
Total latent equip. load	2439	Btuh
Total equipment load	14357	Btuh
Req. total capacity at 0.70 SHR	1.4	ton

Heating Equipment Summary

Make GE
Trade ZONELINE
Model PTCA STRIP

Efficiency	80	AFUE
Heating input	11700	Btuh
Heating output	11700	Btuh
Temperature rise	17	°F
Actual air flow	614	cfm
Air flow factor	0.098	cfm/Btuh
Static pressure	0.50	in H2O
Space thermostat		

Cooling Equipment Summary

Make GE
Trade ZONELINE
Cond AZ25E15D3B
Coil PTAC

Efficiency	9.6	EER
Sensible cooling	10220	Btuh
Latent cooling	4380	Btuh
Total cooling	14600	Btuh
Actual air flow	614	cfm
Air flow factor	0.054	cfm/Btuh
Static pressure	0.50	in H2O
Load sensible heat ratio	83	%

Printout certified by ACCA to meet all requirements of Manual J 8th Ed.

Right-J8 Worksheet
Entire House

PREPARED FOR R G ISHMAN
ARCHITECT
17 HOLLYWOOD BLVD, HOLLYWOOD, FL 33320 Phone: 954 929 9695

Job: #2136-1436
Date: 1/7/2008
By: SEQUENZIA

		Entire House	DEN
1	Room name		
2	Exposed wall	57.0 ft	29.0 ft
3	Ceiling height	8.0 ft d	8.0 ft heat/cool
4	Room dimensions		11.0 x 15.0 ft
5	Room area	315.0 ft²	165.0 ft²

	Ty	Construction number	U-value (Btuh/ft²-°F)	Or	HTM (Btuh/ft²)		Area (ft²) or perimeter (ft)		Load (Btuh)		Area (ft²) or perimeter (ft)		Load (Btuh)	
					Heat	Cool	Gross	N/P/S	Heat	Cool	Gross	N/P/S	Heat	Cool
6	W	13A-5ocs	0.125	n	2.50	2.46	88	76	190	187	88	76	190	187
	G	1A-c1ob	1.080	n	21.60	31.92	12	0	259	383	12	0	259	383
	W	13A-5ocs	0.125	s	2.50	2.46	128	116	290	285	0	0	0	0
	G	1A-c1ob	1.080	s	21.60	35.03	12	0	259	420	0	0	0	0
11	W	13A-5ocs	0.125	w	2.50	2.46	184	100	250	246	120	72	180	177
	G	1A-c1ob	1.080	w	21.60	88.27	84	0	1814	7415	48	0	1037	4237
	C	16B-19ad	0.049	-	0.98	2.66	315	315	309	839	165	165	162	439
	F	22A-tph	1.358	-	27.16	0.00	315	57	1548	0	165	29	788	0
	Envelope loss/gain								4920	9774			2615	5423
12	a) Infiltration								969	381			504	198
	b) Ventilation								0	0			0	0
13	Internal gains:	Occupants @	230				0			0	0			0
		Appliances @	1200				0			0	0			0
	Less external load								0	0			0	0
	Less transfer								0	0			0	0
	Redistribution								0	0			0	0
14	Subtotal								5889	10155			3119	5621
15	Duct loads						6%	13%	353	1320	6%	13%	187	731
	Total room load								6242	11475			3307	6352
	Air required (cfm)								614	614			325	340

Printout certified by ACCA to meet all requirements of Manual J 8th Ed.

Right-J8 Worksheet
Entire House
PREPARED FOR R G ISHMAN ARCHITECT

2117 HOLLYWOOD BLVD, HOLLYWOOD, FL 33320 Phone: 954 929 9695

Job: #2136-1436
Date: 1/7/2008
By: SEQUENZIA

1	Room name				SUN ROOM										
2	Exposed wall				28.0 ft										
3	Ceiling height				8.0 ft				heat/cool						
4	Room dimensions				15.0 x 10.0 ft										
5	Room area				150.0 ft²										
	Ty	Construction number	U-value (Btuh/ft²-°F)	Or	HTM (Btuh/ft²)		Area (ft²) or perimeter (ft)		Load (Btuh)		Area or perimeter		Load	
					Heat	Cool	Gross	N/P/S	Heat	Cool	Gross	N/P/S	Heat	Cool
6	W	13A-5ocs	0.125	n	2.50	2.46	0	0	0	0				
.	G	1A-c1ob	1.080	n	21.60	31.92	0	0	0	0				
.	W	13A-5ocs	0.125	s	2.50	2.46	128	116	290	285				
.	G	1A-c1ob	1.080	s	21.60	35.03	12	0	259	420				
11	W	13A-5ocs	0.125	w	2.50	2.46	64	28	70	69				
	G	1A-c1ob	1.080	w	21.60	88.27	36	0	778	3178				
	C	16B-19ad	0.049	-	0.98	2.66	150	150	147	399				
	F	22A-tph	1.358	-	27.16	0.00	150	28	760	0				
	Envelope loss/gain								2304	4351				
12	a) Infiltration								465	183				
	b) Ventilation								0	0				
13	Internal gains:	Occupants @	230				0			0				
		Appliances @	1200				0			0				
	Less external load								0	0				
	Less transfer								0	0				
	Redistribution								0	0				
14	Subtotal								2770	4534				
15	Duct loads						6%	13%	166	589				
	Total room load								2936	5123				
	Air required (cfm)								289	274				

Printout certified by ACCA to meet all requirements of Manual J 8th Ed.

ED TERMINAL AIR CONDITIONERS AND HEAT PUMPS

PTHP's

- motors for quiet operation and higher efficiency
- ntly lubricated fan motors
- e controls for better room temperature control
- isting GE Zoneline wall cases
- air filters for ease of cleaning and efficient maintenance
- leading EER's and COP's on heat pumps
- desk control compatibility
- control thermostat compatibility
- ic frost control
- **3-197** through **B93-199** series includes electronic re limiting; power cords, **G80-188** through **G80-190**, are rately
- year warranty parts and labor; second through fifth year labor on sealed refrigeration system; second through limited parts warranty
- e sold separately

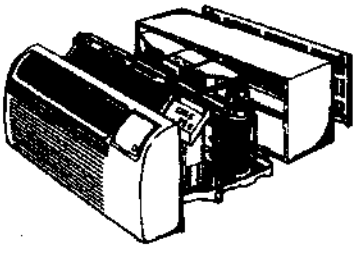

ilable from participating Johnstone Supply stores by order:

- models (require direct connection to comply with National Code)
- ion treated models required in seacoast and e environments
- BtuH
- pumps with internal condensate removal
- d 20A models

	F/L Amps	L/R Amps	Fuse Size Amps	COP	Width	Height	Depth	Shipping Wt. Lbs.	Order #
D3B	3.6/3.9	21	20	–	42"	16"	13-3/4"	122	B93-191
D3B	4.9/5.3	33	20	–	42"	16"	13-3/4"	131	B93-192
3B	7.0/7.5	38	20	–	42"	16"	13-3/4"	138	B93-193
3B	3.6/3.9	21	20	3.5/3.5	42"	16"	13-3/4"	127	B93-194
D3B	4.9/5.3	33	20	3.3/3.3	42"	16"	13-3/4"	131	B93-195
5D3B	7.0/7.5	38	20	3.1/3.1	42"	16"	13-3/4"	145	B93-196
DAB	3.6/3.9	21	20	3.5/3.5	42"	16"	13-3/4"	122	B93-197
DAB	5.1/5.5	33	20	3.3/3.3	42"	16"	13-3/4"	132	B93-198
5DAB	6.7/7.3	38	20	3.1/3.1	42"	16"	13-3/4"	143	B93-199

	Type	Cool BtuH	Heat BtuH	Strip Heat BtuH	EER	Dehumidifying Pints/Hr.	Order #
D3B	A/C	9,000/8,800	–	11,700/9,600	11.3	2.7	B93-191
D3B	A/C	11,700/11,500	–	11,700/9,600	10.7	3.6	B93-192
5D3B	A/C	14,600/14,300	–	11,700/9,600	9.6	4.5	B93-193
D3B	Heat Pump	9,000/8,800	8,400/8,200	11,700/9,600	11.3	2.7	B93-194
D3B	Heat Pump	11,700/11,500	10,900/10,700	11,700/9,600	10.7	3.6	B93-195
5D3B	Heat Pump	14,600/14,300	13,400/13,200	11,700/9,600	9.6	4.5	B93-196
DAB	Heat Pump	9,000/8,800	8,400/8,200	11,700/9,600	11.3	2.8	B93-197
DAB	Heat Pump	11,800/11,600	10,900/10,700	11,700/9,600	10.7	3.6	B93-198
5DAB	Heat Pump	14,700/14,400	13,400/13,200	11,700/9,600	10.0	4.8	B93-199

CESSORIES FOR GE ZONELINE PACKAGED TERMINAL UNITS

.#	Description	Features	Order #
77A4	Wall Case	Molded SMC Fiberglass-Reinforced Polyester Compound	B93-200
10	Drain Kit	For Internal or External Disposal of Condensate	B13-401
60	Aluminum Grille	Standard Aluminum Grille	B93-201
71	Wall Case	Insulated, Galvanized Steel Wall Sleeve	B93-202
3152	15A Power Cord	Power Cord for B93-197, B93-198 & B93-199	G80-188
3202	20A Power Cord	Power Cord for B93-197, B93-198 & B93-199	G80-189
3302	30A Power Cord	Power Cord for B93-197, B93-198 & B93-199	G80-190

Call your local Johnstone Supply for competitive prices on these products

- Solid-state controls for better room temperature
- Fits all existing GE Zoneline wall cases
- Upfront air filters for ease of cleaning and efficient maintenance
- Industry leading EER's and COP's on heat pumps
- Central desk control compatibility
- Remote control thermostat compatibility
- Automatic frost control
- 5200 **B93-197** through **B93-199** series includes electronic temperature limiting; power cords, **G80-188** through **G80-190**, are sold separately
- Full one-year warranty parts and labor; second through fifth year parts and labor on sealed refrigeration system; second through fifth year limited parts warranty
- Wall case sold separately

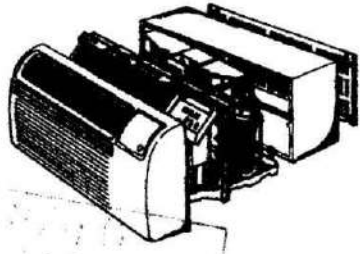

Also available from participating Johnstone Supply stores by special order:

- 265V models (require direct connection to comply with National Electric Code)
- Corrosion treated models required in seacoast and corrosive environments
- 7,000 BtuH
- Heat pumps with internal condensate removal
- 15A and 20A models

APR 14 2003

Model #	F/L Amps	L/R Amps	Fuse Size Amps	COP	Width	Height	Depth	Shipping Wt. (lbs.)	Order #
AZ25E09D3B	3.6/3.9	21	20	–	42"	16"	13-3/4"	122	B93-191
AZ25E12D3B	4.9/5.3	33	20	–	42"	16"	13-3/4"	131	B93-192
AZ25E15D3B	7.0/7.5	38	20	–	42"	16"	13-3/4"	138	B93-193
AZ35H09D3B	3.6/3.9	21	20	3.5/3.5	42"	16"	13-3/4"	127	B93-194
AZ35H12D3B	4.9/5.3	33	20	3.3/3.3	42"	16"	13-3/4"	131	B93-195
AZ35H15D3B	7.0/7.5	38	20	3.1/3.1	42"	16"	13-3/4"	145	B93-196
AZ55H09DAB	3.6/3.9	21	20	3.5/3.5	42"	16"	13-3/4"	122	B93-197
AZ55H12DAB	5.1/5.5	33	20	3.3/3.3	42"	16"	13-3/4"	132	B93-198
AZ55H15DAB	6.7/7.3	38	20	3.1/3.1	42"	16"	13-3/4"	143	B93-199

Model #	Type	Cool Btu/H	Heat Btu/H	Sizing Heat Btu/H	EER	Dehumidify Pints/Hr.	Order #
AZ25E09D3B	A/C	9,000 /8,800	–	11,700 /9,600	11.3	2.7	B93-191
AZ25E12D3B	A/C	11,700/11,500	–	11,700 /9,600	10.7	3.6	B93-192
AZ25E15D3B	A/C	14,600/14,300	–	11,700 /9,600	9.6	4.5	B93-193
AZ35H09D3B	Heat Pump	9,000/8,800	8,400/8,200	11,700 /9,600	11.3	2.7	B93-194
AZ35H12D3B	Heat Pump	11,700/11,500	10,900/10,700	11,700 /9,600	10.7	3.6	B93-195
AZ35H15D3B	Heat Pump	14,600/14,300	13,400/13,200	11,700 /9,600	9.6	4.5	B93-196
AZ55H09DAB	Heat Pump	9,000/8,800	8,400/8,200	11,700 /9,600	11.3	2.8	B93-197
AZ55H12DAB	Heat Pump	11,800/11,600	10,900/10,700	11,700 /9,600	10.7	3.6	B93-198
AZ55H15DAB	Heat Pump	14,700/14,400	13,400/13,200	11,700 /9,600	10.0	4.8	B93-199

ACCESSORIES FOR GE ZONELINE PACKAGED TERMINAL UNITS

Mfg. #	Description	Features	Order #
RA877A4	Wall Case	Molded SMC Fiberglass-Reinforced Polyester Compound	B93-200
RAD10	Drain Kit	For Internal or External Disposal of Condensate	B13-401
RAG60	Aluminum Grille	Standard Aluminum Grille	B93-201
RA871	Wall Case	Insulated, Galvanized Steel Wall Sleeve	B93-202
RAK3152	15A Power Cord	Power Cord for B93-197, B93-198 & B93-199	G80-188
RAK3202	20A Power Cord	Power Cord for B93-197, B93-198 & B93-199	G80-189
RAK3302	30A Power Cord	Power Cord for B93-197, B93-198 & B93-199	G80-190

Call your local Johnstone Supply for competitive prices on these products.

MIAMI-DADE COUNTY

BUILDING CODE COMPLIANCE OFFICE (BCCO)
PRODUCT CONTROL DIVISION

MIAMI-DADE COUNTY, FLORIDA
METRO-DADE FLAGLER BUILDING
140 WEST FLAGLER STREET, SUITE 1603
MIAMI, FLORIDA 33130-1563
(305) 375-2901 FAX (305) 375-2908
www.buildingcodeonline.com

NOTICE OF ACCEPTANCE (NOA)

Yale Ogron Windows and Doors, Inc.
8130 N. W. 74th Avenue
Medley, FL 33166

SCOPE:

This NOA is being issued under the applicable rules and regulations governing the use of construction materials. The documentation submitted has been reviewed by Miami-Dade County Product Control Division and accepted by the Board of Rules and Appeals (BORA) to be used in Miami Dade County and other areas where allowed by the Authority Having Jurisdiction (AHJ).

This NOA shall not be valid after the expiration date stated below. The Miami-Dade County Product Control Division (in Miami Dade County) and/or the AHJ (in areas other than Miami Dade County) reserve the right to have this product or material tested for quality assurance purposes. If this product or material fails to perform in the accepted manner, the manufacturer will incur the expense of such testing and the AHJ may immediately revoke, modify, or suspend the use of such product or material within their jurisdiction. BORA reserves the right to revoke this acceptance, if it is determined by Miami-Dade County Product Control Division that this product or material fails to meet the requirements of the applicable building code.

This product is approved as described herein, and has been designed to comply with the Florida Building Code, including the High Velocity Hurricane Zone.

DESCRIPTION: Series 2500 Aluminum Single Hung Window – L.M.I.

APPROVAL DOCUMENT: Drawing No. **W05-37**, titled "Series 2500 Alum. Single Hung Window (L.M.I.)", sheets 1 through 5 of 5, dated 07/26/05, with revision A dated 10/05/05, prepared by Al Farooq Corporation, signed and sealed by Humayoun Farooq, P.E., bearing the Miami-Dade County Product Control Approval stamp with the Notice of Acceptance number and approval date by the Miami-Dade County Product Control Division.

MISSILE IMPACT RATING: Large and Small Missile Impact Resistant

LABELING: Each unit shall bear a permanent label with the manufacturer's name or logo, city, state and following statement: "Miami-Dade County Product Control Approved", unless otherwise noted herein.

RENEWAL of this NOA shall be considered after a renewal application has been filed and there has been no change in the applicable building code negatively affecting the performance of this product.

TERMINATION of this NOA will occur after the expiration date or if there has been a revision or change in the materials, use, and/or manufacture of the product or process. Misuse of this NOA as an endorsement of any product, for sales, advertising or any other purposes shall automatically terminate this NOA. Failure to comply with any section of this NOA shall be cause for termination and removal of NOA.

ADVERTISEMENT: The NOA number preceded by the words Miami-Dade County, Florida, and followed by the expiration date may be displayed in advertising literature. If any portion of the NOA is displayed, then it shall be done in its entirety.

INSPECTION: A copy of this entire NOA shall be provided to the user by the manufacturer or its distributors and shall be available for inspection at the job site at the request of the Building Official.

This NOA consists of this page 1 and evidence page E-1, as well as approval document mentioned above.
The submitted documentation was reviewed by **Manuel Perez, P.E.**

Approved
4/4/06

NOA No 05-0810.04
Expiration Date: December 1, 2010
Approval Date: December 1, 2005

Yale Ogron Windows and Doors, Inc.

NOTICE OF ACCEPTANCE: EVIDENCE SUBMITTED

A. DRAWINGS

1. Manufacturer's die drawings and sections.
2. Drawing No **W05-37**, Sheets 1 through 5 of 5, titled "Series 2500 Alum. Single Hung Window", prepared by Al-Farooq Corporation, dated 07/26/05 with revision A dated 10/05/05, signed and sealed by Humayoun Farooq, P.E.

B. TESTS

1. Test reports on 1) Air Infiltration Test, per FBC, TAS 202-94
   2) Uniform Static Air Pressure Test, Loading per FBC TAS 202-94
   3) Water Resistance Test, per FBC, TAS 202-94
   4) Forced Entry Test, per FBC 3603.2 (b) and TAS 202-94
   along with marked-up drawings and installation diagram of aluminum single hung window, prepared by Hurricane Engineering & Testing Inc., Test Report No. **HETI-04-1419A**, dated Jan. 20, 2005, signed and sealed by Ivonne Ghia, P.E.
2. Test reports on 1) Large Missile Impact Test per FBC, TAS 201-94
   2) Cyclic Wind Pressure Loading per FBC, TAS 203-94
   along with marked-up drawings and installation diagram of aluminum single hung window, prepared by Hurricane Engineering & Testing Inc., Test Report No. **HETI-04-1419B**, dated Jan. 21, 2005, signed and sealed by Ivonne Ghia, P.E.

C. CALCULATIONS

1. Anchor Calculations and structural analysis, complying with FBC-2004, prepared by Al-Farooq Corporation, dated July 23, 2005, signed and sealed by Humayoun Farooq, P.E. **Complies with ASTM E1300-98**

D. QUALITY ASSURANCE

1. Miami Dade Building Code Compliance Office (BCCO).

E. MATERIAL CERTIFICATIONS

1. Notice of Acceptance No. **03-0225.10** issued to Glasslam NGI Inc. for their "**Safety-Plus II - Laminated Glass**" dated 08/07/03, expiring on 08/07/08.

F. STATEMENTS

1. Statement letter of conformance, dated July 25, 2005, signed and sealed by Humayoun Farooq, P.E.
2. Statement letter of no financial interest, dated July 25, 2005, signed and sealed by Humayoun Farooq, P.E.

G. OTHER

1. None.

Manuel Perez, P.E.
Product Control Examiner
NOA No 05-0510.04
Expiration Date: December 1, 2010
Approval Date: December 1, 2005

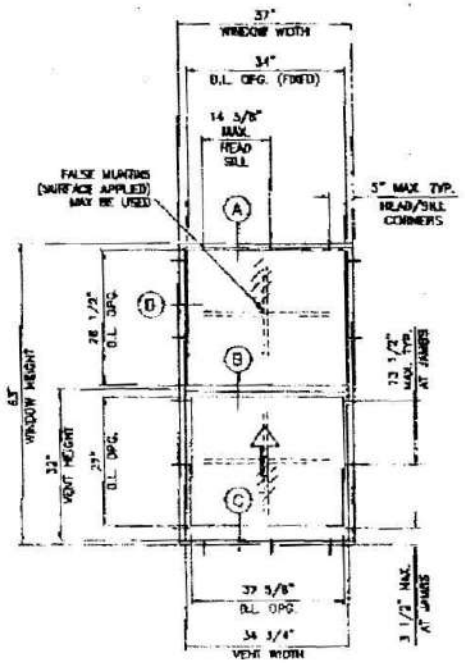

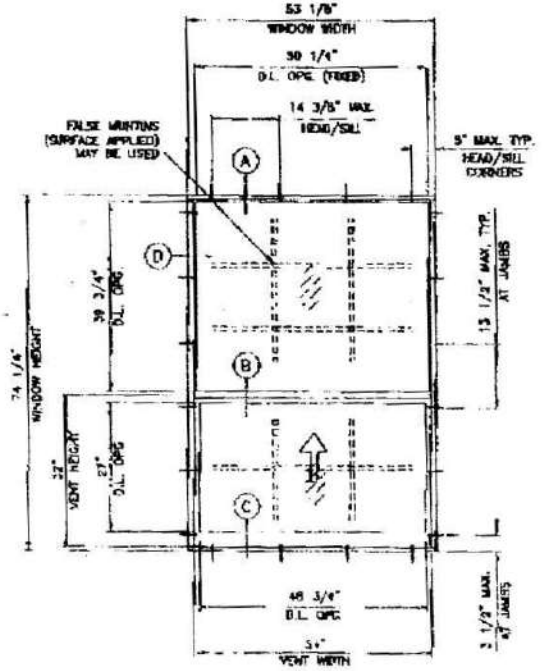

TYPICAL ELEVATION
TESTED UNITS

THESE WINDOWS ARE RATED FOR LARGE MISSILE IMPACT.
SHUTTERS ARE NOT REQUIRED.

SERIES 2500 ALUMINUM SINGLE HUNG WINDOW

DESIGN LOAD RATINGS FOR THESE WINDOWS TO BE AS PER CHART SHOWN ON SHEET 2.

APPROVAL APPLIES TO SINGLE UNITS OR SIDE BY SIDE COMBINATIONS OF S.H./S.H. OR S.H. WITH OTHER WINDOW TYPES IN MODULES OF TWO OR MORE WINDOWS USING MIAMI-DADE COUNTY APPROVED MULLIONS IN BETWEEN.

THIS PRODUCT HAS BEEN DESIGNED AND TESTED TO COMPLY WITH THE REQUIREMENTS OF THE FLORIDA BUILDING CODE 2004 EDITION FOR THE HIGH VELOCITY HURRICANE ZONE.

WOOD FRICKS BY OTHERS, MUST BE ANCHORED PROPERLY TO TRANSFER LOADS TO THE STRUCTURE.

ANCHORS SHALL BE AS LISTED, SPACED AS SHOWN ON DETAILS. ANCHOR EMBEDMENT TO BASE MATERIAL SHALL BE BEYOND WALL DRESSING OR STUCCO.

ALL STEEL IS CORRECT WITH ALUMINUM TO BE COATED OR PLATED.

ANCHORING OR LOADING CONDITIONS NOT SHOWN IN THESE DETAILS ARE NOT PART OF THIS APPROVAL.

A 33% INCREASE IN ALLOWABLE STRESS IS USED IN DESIGN OF WOOD ANCHORS ONLY.

LAMINATED GLASS
LARGE MISSILE IMPACT

Engr. Cert. Hurricane Impact Structures
FLA. PE # 14837
C.A.N. 3939
OCT 06 2005

Approved as complying with the Florida Building Code
Date DEC 1 2005
Miami-Dade Product Control
By

AL-FAROOQ CORPORATION
ENGINEERS, PLANNERS & PRODUCT DESIGN
1235 SW 87 AVE
MIAMI, FLORIDA 33174
TEL (305) 284-8100 FAX (305) 282-6978
COMP-AHL\W05-37\5

SERIES 2500 ALUM SINGLE HUNG WINDOW (L.M.I.)

YALE ORION WINDOWS AND DOORS INC.
8130 N.W. 74TH AVE.
MEDLEY, FL. 33166
TEL (305) 887-2846 FAX (305) 883-1306

revisions:
1 10/20/05 DR. CORRECTION

date 07-26-05
scale 1/2" = 1'
drawn by
checked by

drawing no.
W05-37

sheet 1 of 5

02/13/2007 09:37 FAX 8543740220 PAVILION → 1881PEMBROKE 003/016

EQUAL LITES WINDOWS
DESIGN LOAD CAPACITY - PSF

WINDOW DIMS.		ANCHORS METHOD 'A'		ANCHORS METHOD 'B'	
WIDTH	HEIGHT	EXT.(+)	INT.(−)	EXT.(+)	INT.(−)
19-1/8"	26" (3)	70.0	90.0	70.0	90.0
26-1/2"		70.0	90.0	70.0	90.0
37"		70.0	90.0	70.0	90.0
42"		70.0	90.0	70.0	90.0
48"		70.0	85.4	70.0	90.0
53-1/8"		70.0	78.0	70.0	80.0
19-1/8"	36-3/8" (4)	70.0	90.0	70.0	90.0
26-1/2"		70.0	90.0	70.0	90.0
37"		70.0	90.0	70.0	90.0
42"		70.0	81.5	70.0	90.0
48"		70.0	73.0	70.0	90.0
53-1/8"		67.0	67.0	70.0	90.0
19-1/8"	50-5/8" (4)	70.0	90.0	70.0	90.0
26-1/2"		70.0	81.4	70.0	90.0
37"		64.2	64.2	70.0	90.0
42"		58.3	58.3	70.0	90.0
48"		52.5	52.5	60.0	65.0
53-1/8"		48.4	48.4	60.0	65.0
19-1/8"	38" (5)	70.0	90.0	70.0	90.0
26-1/2"		70.0	81.1	70.0	90.0
37"		66.0	66.0	70.0	67.8
42"		60.0	60.2	60.0	65.0
48"		54.5	54.5	60.0	53.2
53-1/8"		50.3	50.3	54.2	53.2
19-1/8"	63" (6)	70.0	90.0	70.0	90.0
26-1/2"		70.0	90.0	70.0	90.0
37"		70.0	72.8	70.0	81.6
42"		60.0	65.0	60.0	66.0
48"		60.0	60.2	60.0	61.1
53-1/8"		54.1	54.1	54.1	54.1
19-1/8"	74-1/4" (6)	70.0	90.0	70.0	90.0
26-1/2"		70.0	74.8	70.0	84.1
37"		58.6	58.6	58.4	58.4
42"		53.8	53.8	60.0	61.6
48"		48.9	48.9	55.8	55.8
53-1/8"		45.4	45.4	50.7	50.7

* NO. IN PARENTHESIS INDICATE NO. OF ANCHORS PER JAMB

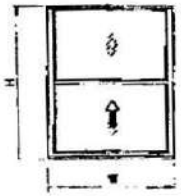

UNEQUAL LITES (GREEK TYPE) WINDOWS
DESIGN LOAD CAPACITY - PSF

WINDOW DIMS.		ANCHORS METHOD 'A'		ANCHORS METHOD 'B'	
WIDTH	HEIGHT	EXT.(+)	INT.(−)	EXT.(+)	INT.(−)
19-1/8"	50-5/8" (4)	70.0	90.0	70.0	90.0
26-1/2"		70.0	81.4	70.0	90.0
37"		64.2	64.2	70.0	81.7
42"		58.3	58.3	70.0	71.5
46"		52.5	52.5	60.0	61.3
53-1/8"		48.4	48.4	54.3	54.3
19-1/8"	58" (5)	70.0	90.0	70.0	90.0
26-1/2"		70.0	83.1	70.0	95.0
37"		63.2	63.2	63.2	63.2
42"		60.0	66.2	60.0	65.0
46"		54.5	54.5	59.6	59.6
53-1/8"		50.3	50.3	53.5	53.5
19-1/8"	63" (6)	70.0	90.0	70.0	90.0
26-1/2"		70.0	81.8	70.0	91.8
37"		58.0	58.0	58.0	58.0
42"		60.0	60.2	60.0	60.7
46"		54.4	54.4	54.4	54.4
19-1/8"	74-1/4" (6)	70.0	90.0	70.0	90.0
26-1/2"		64.5	64.5	64.5	64.5
37"		45.1	45.1	45.1	45.1

* NO. IN PARENTHESIS INDICATE NO. OF ANCHORS PER JAMB

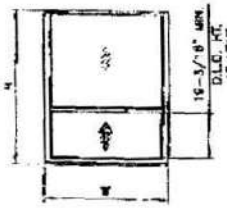

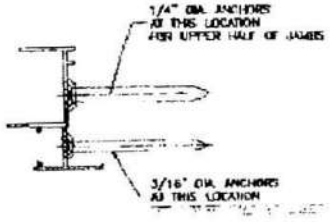

ANCHORS METHOD 'A'

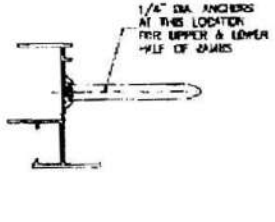

ANCHORS METHOD 'B'

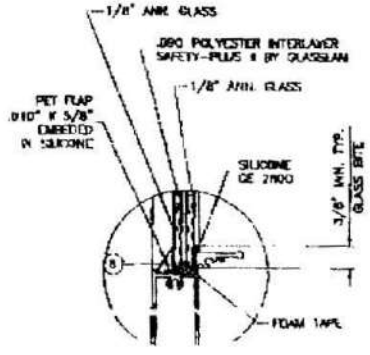

GLAZING DETAIL

NOTE:
GLASS CAPACITIES ON THIS SHEET ARE BASED ON ASTM E1300-98 (60 SEC. WIND)

OCT 06 2005

Approved as complying with the
Date DEC 1 2005
Permit No. 05-0610.01
Miami-Dade Product Control
Division
By

AL-FAROOQ CORPORATION
ENGINEERS, PLANNERS & PRODUCT DESIGN
1235 SW 87 AVE
MIAMI, FLORIDA 33174
TEL. (305) 264-6103 FAX (305) 262-9078
COMP-ANL WOS-3770

SERIES 2500 ALUM SINGLE HUNG WINDOW (L.M.I.)

YALE CORON WINDOWS AND DOORS INC.
6130 N.W. 74TH AVE.
MEDLEY, FL. 33166
TEL. (305) 887-2640 FAX (305) 883-1509

revisions:	by	date
ADD. GLASS		10.04.05
INTERLAYER GA.		10.06.05
NAME REV.		10.06.05

date 07-24-05
scale 1/2" = 1'
drawn by AL-FAROOQ
job no.

drawing no. WO5-37
sheet 2 of 5

02/13/2007 08:37 FAX 9543740220 PAVILLION + 1681FENBROKE 004/016

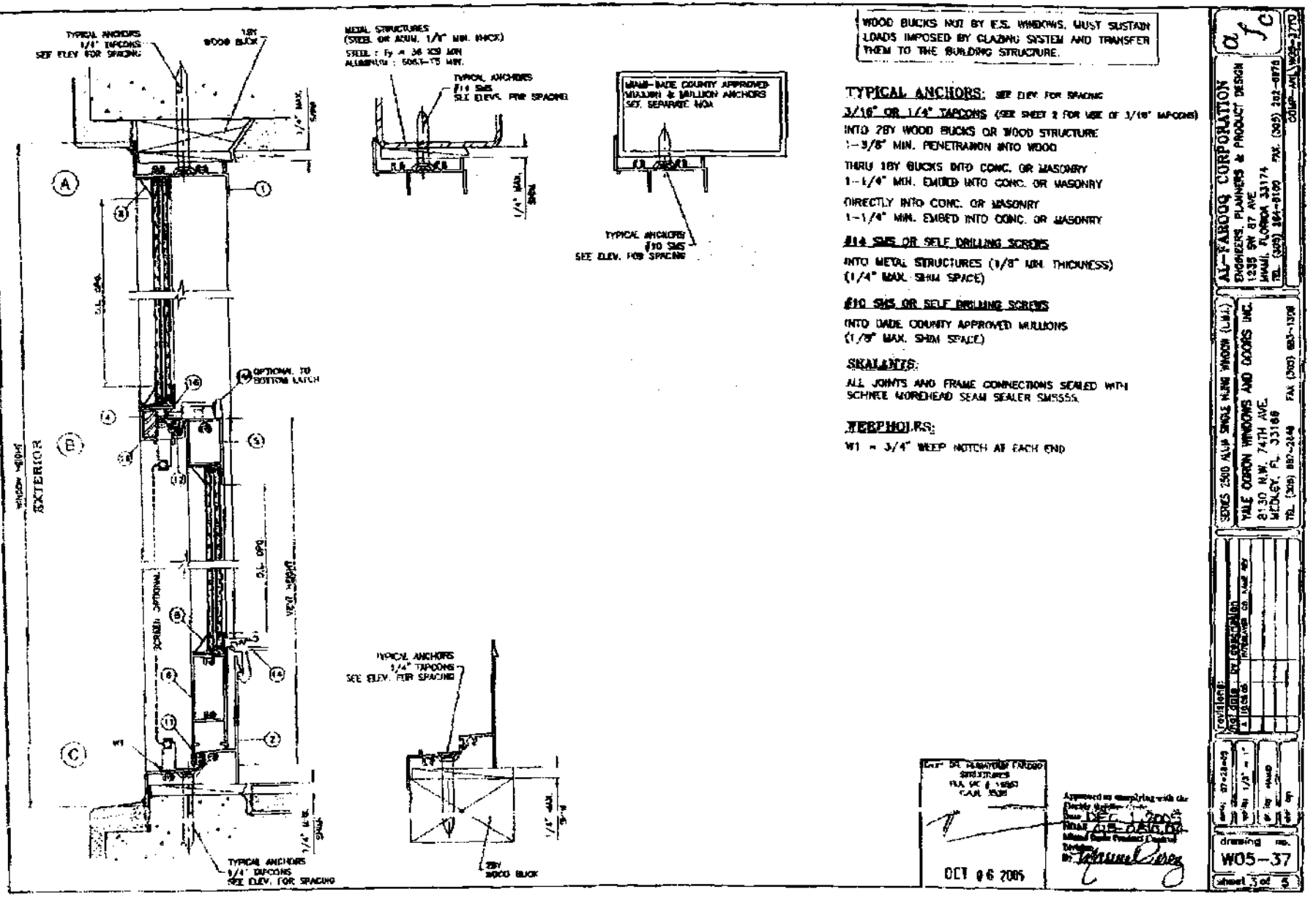

WOOD BUCKS NOT BY E.S. WINDOWS, MUST SUSTAIN LOADS IMPOSED BY GLAZING SYSTEM AND TRANSFER THEM TO THE BUILDING STRUCTURE.

TYPICAL ANCHORS: SEE ELEV FOR SPACING

3/16" OR 1/4" TAPCONS (SEE SHEET 2 FOR USE OF 3/16" TAPCONS)

INTO 2BY WOOD BUCKS OR WOOD STRUCTURE
1-3/8" MIN. PENETRATION INTO WOOD

THRU 1BY BUCKS INTO CONC. OR MASONRY
1-1/4" MIN. EMBED INTO CONC. OR MASONRY

DIRECTLY INTO CONC. OR MASONRY
1-1/4" MIN. EMBED INTO CONC. OR MASONRY

#14 SMS OR SELF DRILLING SCREWS

INTO METAL STRUCTURES (1/8" MIN. THICKNESS)
(1/4" MAX. SHIM SPACE)

#10 SMS OR SELF DRILLING SCREWS

INTO DADE COUNTY APPROVED MULLIONS
(1/8" MAX. SHIM SPACE)

SEALANTS:

ALL JOINTS AND FRAME CONNECTIONS SEALED WITH SCHNEE MOREHEAD SEAM SEALER SMS555.

WEEPHOLES:

W1 = 3/4" WEEP NOTCH AT EACH END

OCT 06 2005

DEC 1 2005

ALFA WOOD CORPORATION
ENGINEERS, PLANNERS & PRODUCT DESIGN
1235 SW 87 AVE
MIAMI, FLORIDA 33174
TEL. (305) 264-8100 FAX. (305) 262-0578

SERIES 2500 W/ 1" SEALED MAIN FRAME (LIMI)

YALE CORIAN WINDOWS AND DOORS INC.
8130 N.W. 74TH AVE.
MEDLEY, FL. 33166
TEL. (305) 887-2844 FAX (305) 883-1508

revisions	date	by
1	10/5/05	

drawing no. W05-37

sheet 3 of 5

02/13/2007 09:38 FAX 9543740229 FAYLLION + 1691PEMBROKE 005/016

- 02/13/2007 09:38 FAX 3543740220 PAVILLION + 1881PEMBROKE 006/016

ITEM #	PART #	REQD	DESCRIPTION	MATERIAL	MANF./SUPPLIER/REMARKS
1	YE-189	1	FRAME HEAD	6063-T5	-
2	YE-187	1	FRAME SILL	6063-T5	-
3	YE-102	2	FRAME JAMB	6063-T5	-
4	YE-152	1	FIXED RAIL	6063-T5	-
5	YE-151	1	VENT TOP RAIL	6063-T5	-
6	YE-188	1	VENT BOTTOM RAIL	6063-T5	-
7	YE-930	2	VENT JAMB	6063-T5	-
8	-	AS REQD.	GLAZING BEAD	ALUMINUM	ROLL FORMED
9	-	-	-	-	-
10	-	2/ VENT	BLOCK & TACKLE BALANCE	-	-
11	YH-511	AS REQD.	BULB VINYL	PVC	SINGLE
12	YH-510	AS REQD.	BULB VINYL	PVC	SINGLE
13	YH-509F	AS REQD.	PILE-REMOVED .187 X .250	-	FIN SEAL (DOUBLE)
14	YH-504	2/ VENT	VENT LATCHES	NYLON/DIECAST	AT 11" FROM ENDS
14A	YH-515	2/ VENT	CAM LOCKS	ZAMAK	AT 11" FROM ENDS
15	#10 X 3/4"	8	FRAME ASSEMBLY SCREWS	CRS	PLATED, PH SMS
16	#8 X 1"	2	FIXED RAIL SCREWS	CRS	CAD PLATED, PH SMS
17	#8 X 1-1/4"	4/ VENT	VENT ASSEMBLY SCREWS	CRS	CAD PLATED, PH SMS
18	HRB83	1	REINFORCING BAR (.677 X .312")	STEEL	-

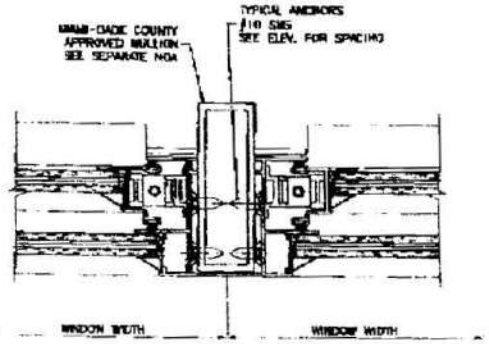

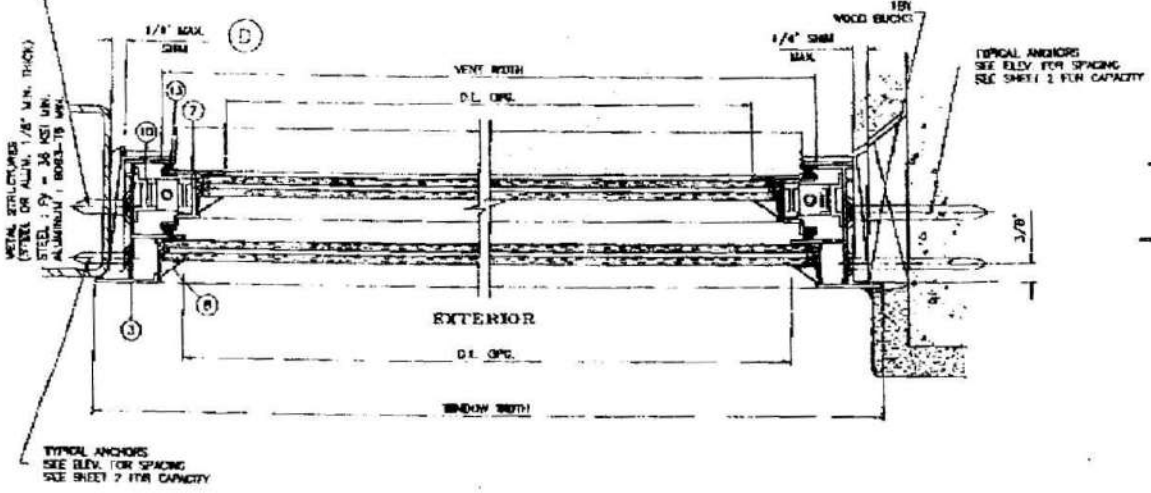

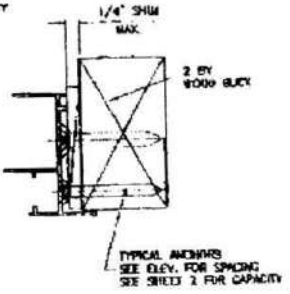

Engr: DR. HOMAYOUN FAROOQ
STRUCTURES
FLA. PE # 18557
C.A.N. 3558

DCT 06 2005

Approved as complying with the
Florida Building Code
Date DEC 1 2005
NOA 05-0610.04
Miami-Dade Product Control
Division
By

AL-FAROOQ CORPORATION
ENGINEERS, PLANNERS & PRODUCT DESIGN
12255 SW 67 AVE
MIAMI, FLORIDA 33174
TEL. (305) 284-9168 FAX. (305) 281-8878
CORP. ANL. W05-3770

SERIES 2500 ALUM SINGLE HUNG WINDOW (J.H.)

YALE DORON WINDOWS AND DOORS INC.
8130 N.W. 74TH AVE.
MEDLEY, FL. 33166
TEL. (305) 887-2849 FAX (305) 883-1308

revisions
1 10-26-05 PER CORRECTION

date 07-28-05
scale 1/2" = 1"
dr. by HMRD
chk. by

drawing no.
W05-37
sheet 4 of 5

02/13/2007 09:38 FAX 9543740220 PAVILLION 1691PEMBROKE 007/016

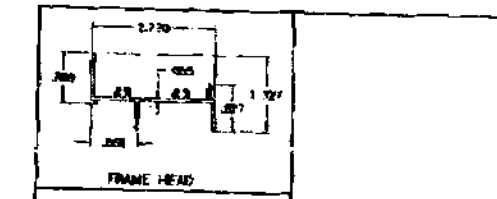

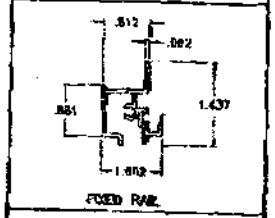

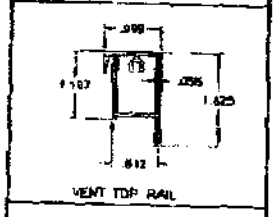

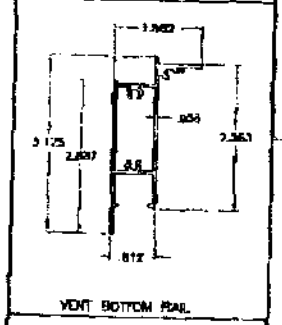

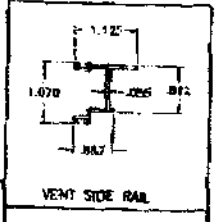

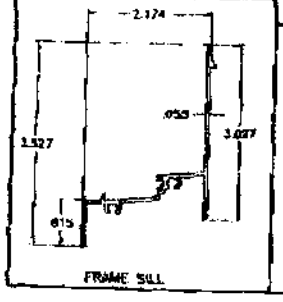

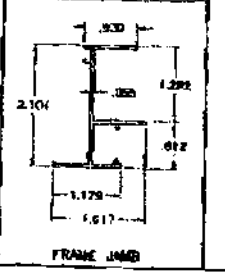

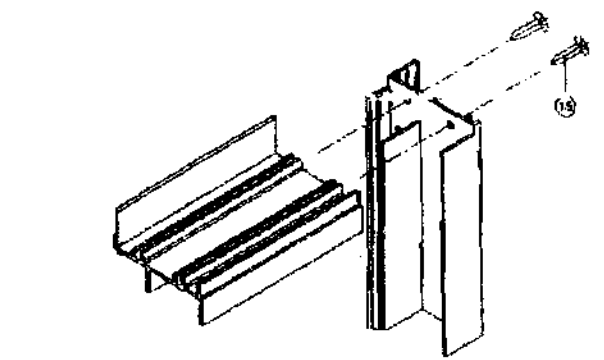

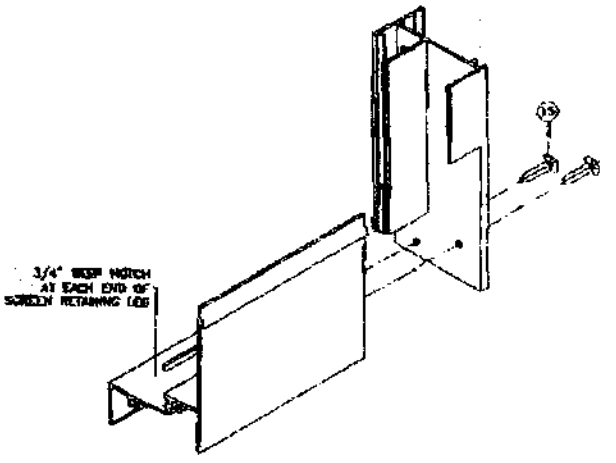

S.H. FRAME CORNER DETAIL

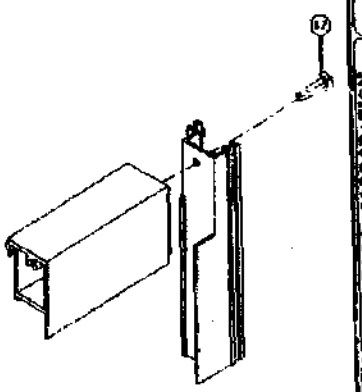

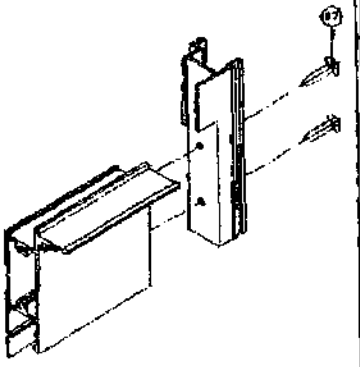

S.H. VENT CORNER DETAIL

OCT 06 2005

Approved as complying with the Florida Building Code
Date: Dec. 1, 2005
Permit No. 05-0705.08
Authorized Building Official Designee
Signature:

AL-FAROOQ CORPORATION
ENGINEERS, PLANNERS & PRODUCT DESIGN
1235 SW 87 AVE
MIAMI, FLORIDA 33174
TEL. (305) 264-6100 FAX. (305) 264-6878

SERIES 2500 ALUM SINGLE HUNG WINDOW (S.H.W.)
YALE OGRON WINDOWS AND DOORS INC.
8130 N.W. 74TH AVE.
MEDLEY, FL. 33166
TEL. (305) 887-4844 FAX (305) 883-1308

revisions: 01 Description

date 07-06-05
scale 1/2" = 1"
dr. by: Hmdz
chk. by:

drawing no. W05-37
sheet 5 of 5

MIAMI-DADE COUNTY

BUILDING CODE COMPLIANCE OFFICE (BCCO)
PRODUCT CONTROL DIVISION

MIAMI-DADE COUNTY, FLORIDA
METRO-DADE FLAGLER BUILDING
140 WEST FLAGLER STREET, SUITE 1603
MIAMI, FLORIDA 33130-1563
(305) 375-2901 FAX (305) 375-2908
www.buildingcodeonline.com

NOTICE OF ACCEPTANCE (NOA)

TRACO Windows & Doors
71 Progress Avenue
Cranberry Township, PA 16066

SCOPE:

This NOA is being issued under the applicable rules and regulations governing the use of construction materials. The documentation submitted has been reviewed by Miami-Dade County Product Control Division and accepted by the Board of Rules and Appeals (BORA) to be used in Miami Dade County and other areas where allowed by the Authority Having Jurisdiction (AHJ).

This NOA shall not be valid after the expiration date stated below. The Miami-Dade County Product Control Division (In Miami Dade County) and/or the AHJ (in areas other than Miami Dade County) reserve the right to have this product or material tested for quality assurance purposes. If this product or material fails to perform in the accepted manner, the manufacturer will incur the expense of such testing and the AHJ may immediately revoke, modify, or suspend the use of such product or material within their jurisdiction. BORA reserves the right to revoke this acceptance, if it is determined by Miami-Dade County Product Control Division that this product or material fails to meet the requirements of the applicable building code.

This product is approved as described herein, and has been designed to comply with the Florida Building Code, including the High Velocity Hurricane Zone.

DESCRIPTION: Series "Doral 3" Outswing Aluminum Patio Door (L.M.I.)

APPROVAL DOCUMENT: Drawing No. **04-113-001B**, titled "Series "Doral 3" Outswing Aluminum Patio Door (Large Missile)", sheets 1 through 6 of 6, prepared by Frank L. Bennardo, P.E., Inc. Consulting Engineers, dated 01/21/04 with revision "1" on 09/06/05,signed and sealed by Frank L.Bennardo, P.E., bearing the Miami-Dade County Product Control Revision stamp with the Notice of Acceptance number and expiration date by the Miami-Dade County Product Control Division.

MISSILE IMPACT RATING: Large and Small Missile Impact

LABELING: Each unit shall bear a permanent label with the manufacturer's name or logo, city, state and following statement: "Miami-Dade County Product Control Approved", unless otherwise noted herein.

RENEWAL of this NOA shall be considered after a renewal application has been filed and there has been no change in the applicable building code negatively affecting the performance of this product.

TERMINATION of this NOA will occur after the expiration date or if there has been a revision or change in the materials, use, and/or manufacture of the product or process. Misuse of this NOA as an endorsement of any product, for sales, advertising or any other purposes shall automatically terminate this NOA. Failure to comply with any section of this NOA shall be cause for termination and removal of NOA.

ADVERTISEMENT: The NOA number preceded by the words Miami-Dade County, Florida, and followed by the expiration date may be displayed in advertising literature. If any portion of the NOA is displayed, then it shall be done in its entirety.

INSPECTION: A copy of this entire NOA shall be provided to the user by the manufacturer or its distributors and shall be available for inspection at the job site at the request of the Building Official.

This NOA **revises NOA # 04-0122.17** and consists of this page 1 and evidence pages E-1, and E-2, as well as approval document mentioned above

The submitted documentation was reviewed by **Herminio F. Gonzalez, P.E., Director, BCCO**

PRODUCT CONTROL ACCEPTED
01/06/06
APR 29 2008

4/4/08 Approved

TRACO Windows & Doors Inc.

NOTICE OF ACCEPTANCE: EVIDENCE PAGE

A. DRAWINGS

1. Manufacturer's die drawings and sections.
2. Drawing No. **04-113-001B,** titled "Series Doral 3 Outswing Aluminum Patio Door – (Large Missile).", sheets 1 through 6 of 6, prepared by Frank L. Bennardo, P.E. Inc. Consulting Engineers, dated 01/21/04 with revision "**1**" on 09/06/05, signed and sealed by Frank L. Bennardo, P.E.

B. TESTS

1. Test reports on 1) Air Infiltration Test, per FBC, TAS 202-94
   2) Uniform Static Air Pressure Test, Loading per FBC, TAS 202-94
   3) Water Resistance Test, per FBC, TAS 202-94
   4) Large Missile Impact Test per FBC, TAS 201-94
   5) Cyclic Wind Pressure Loading per FBC, TAS 203-94
   6) Forced Entry Test, per FBC 2411 3.2.1 and TAS 202-94

   Along with installation diagram of an outswinging aluminum patio door, prepared by Hurricane Test Laboratory, Inc., Test Report No.**0021-1007-03** with specimen number 2, 4, 6, dated 10/29-11/25/03, signed and sealed by Vinu J. Abraham, P.E.
   "Submitted under NOA# 04-0122.17"
2. Test reports on 1) Uniform Static Air Pressure Test, Loading per FBC, TAS 202-94
   2) Cyclic Wind Pressure Loading per FBC, TAS 203-94
   3) Small Missile Impact Test per FBC, TAS 201-94

   Along with installation diagram of an outswinging aluminum patio door, prepared by Hurricane Test Laboratory, Inc., Test Report No.**0021-1007-03** with specimen number 5, dated 11/18-19/03, signed and sealed by Vinu J. Abraham, P.E.
   "Submitted under NOA# 04-0122.17"
3. Test reports on 1) Uniform Static Air Pressure Test, Loading per FBC, TAS 202-94
   2) Cyclic Wind Pressure Loading per FBC, TAS 203-94
   3) Large Missile Impact Test per FBC, TAS 201-94

   Along with installation diagram of an outswinging aluminum patio door, prepared by Hurricane Test Laboratory, Inc., Test Report No.**0021-1007-03** with specimen number 1, dated 10/14-16/03, signed and sealed by Vinu J. Abraham, P.E.
   "Submitted under NOA# 04-0122.17"

C. CALCULATIONS

1. Revised Anchor Calculation and Structural analysis, prepared by Frank L. Bennardo, P.E. Consulting Engineer, dated 09/06/05, signed and sealed by Frank L. Bennardo, P.E.

   Complies with ASTM E1300-98

   No 1/3 stress increase used in anchors into masonry or steel substrate

Herminio F. Gonzalez, P.E.
Director, Building Code Compliance Office
NOA No 05-1003.09
Expiration Date: April 22, 2009
Approval Date: January 26, 2006

TRACO Windows & Doors Inc.

NOTICE OF ACCEPTANCE: EVIDENCE PAGE

D. QUALITY ASSURANCE

1. Miami Dade Building Code Compliance Office (BCCO).

E. MATERIAL CERTIFICATIONS

1. Notice of Acceptance No. **01-0205.02** issued to "Solutia Inc." for "SaflexIIG PVB Interlayer for Laminated Glass" dated 05/17/01, expiring on 05/21/06.

F. STATEMENTS

1. Statement letter of code compliance and no financial interest, dated 09/06/05, signed and sealed by Frank L. Bennardo, P.E.

G. STATEMENTS

1. Letter from consultant, dated 12/06/05, stating that the product is in compliance with the Florida Building Code (FBC).
2. Notice of Acceptance No. **04-0122.17**, issued to TRACO Windows & Doors, for their "Series Doral Outswing Patio Door (L.M.I.)", approved on 04/22/04 and expiring on 04/22/09.

for M Khatib

Herminio F. Gonzalez, P.E.
Director, Building Code Compliance Office
NOA No 05-1003.09
Expiration Date: April 22, 2009
Approval Date: January 26, 2006

LARGE MISSILE IMPACT RESISTANT OUTSWING DOOR WITH SIDELITES

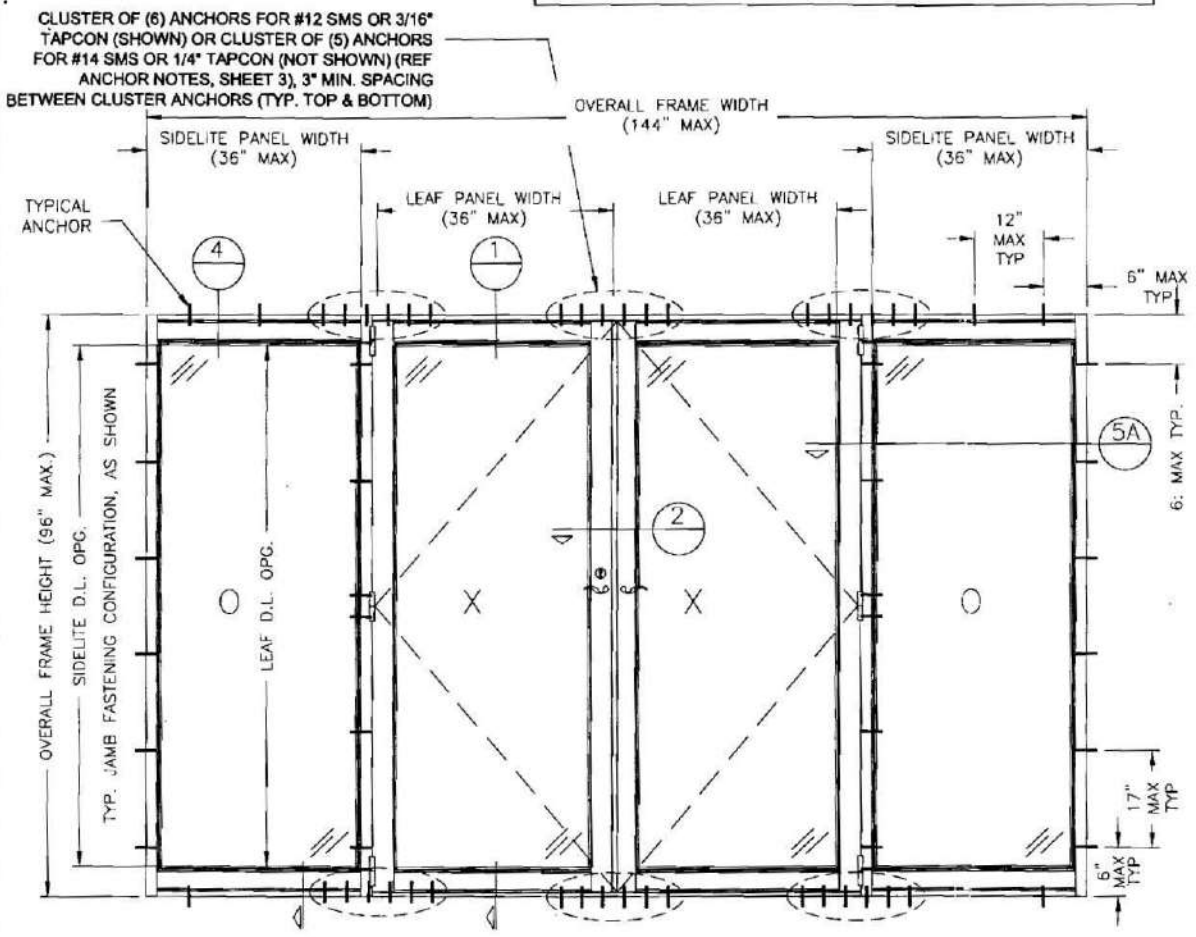

A EXTERIOR ELEVATION: SNAP-MULLION SIDELITES

AS SHOWN, OR OXX, XXO, OXO, XO, OX, or XX CONFIG
USE TYP. JAMB FASTENING CONFIGURATION FOR ALL CASES, AS SHOWN
(N.T.S.)

GENERAL NOTES:

1. THE SWING DOOR SYSTEM DESCRIBED HEREIN HAS BEEN DESIGNED AND TESTED IN COMPLIANCE WITH THE FLORIDA BUILDING CODE 2004 (HIGH VELOCITY HURRICANE ZONE) AND MIAMI-DADE COUNTY PROTOCOLS TAS 201, 202 & 203.

2. NO 33-1/3% INCREASE IN ALLOWABLE STRESS HAS BEEN USED IN THE DESIGN OF THIS SYSTEM. WIND LOAD DURATION FACTOR Cd=1.6 HAS BEEN USED FOR WOOD ANCHOR DESIGN.

3. POSITIVE AND NEGATIVE DESIGN PRESSURES CALCULATED FOR USE WITH THIS DOOR SYSTEM SHALL BE DETERMINED BY OTHERS ON A JOB-SPECIFIC BASIS IN ACCORDANCE WITH THE GOVERNING CODE.

4. THE DOOR SYSTEM DETAILED HEREIN HAS BEEN TESTED PER MIAMI-DADE COUNTY PROTOCOLS TAS-201, TAS-202, & TAS-203 AS REFERENCED IN TEST REPORT #0021-1007-03 BY HURRICANE TEST LABORATORY (HTL).

5. THE DOOR SYSTEM DETAILED HEREIN IS GENERIC AND DOES NOT PROVIDE INFORMATION FOR A SPECIFIC SITE. FOR SITE CONDITIONS DIFFERENT FROM THE CONDITIONS DETAILED HEREIN, A LICENSED ENGINEER OR REGISTERED ARCHITECT SHALL APPLY FOR ONE-TIME APPROVAL AND PREPARE SITE SPECIFIC DOCUMENTS FOR USE IN CONJUNCTION WITH THIS DOCUMENT.

6. PERMIT HOLDER SHALL VERIFY THE ADEQUACY OF THE EXISTING STRUCTURE TO WITHSTAND SUPERIMPOSED LOADS. WOOD BUCKS (NOT BY TRACO) SHALL BE ANCHORED PROPERLY TO TRANSFER LOADS TO THE EXISTING STRUCTURE.

7. DOORS PANELS GLAZED WITH 7/16" LAMINATED GLASS ARE LARGE MISSILE IMPACT APPROVED. NO PROTECTION REQUIRED FOR ALL INSTALLATIONS.

8. ALL STEEL IN CONTACT WITH ALUMINUM SHALL BE PAINTED OR PLATED.

DESIGN PRESSURES:
+55 PSF / -60 PSF

PRODUCT REVIEWED
as complying with the Florida Building Code
Acceptance No. 05-1003.09
Expiration Date 04/22/09
By [signature]
Miami Dade Product Control Division

FRANK L. BENNARDO, P.E.
PE0046549
09/27/2005

FRANK L. BENNARDO, P.E., INC.
CONSULTING ENGINEERS
4441 NORTH DIXIE HIGHWAY
BOCA RATON, FL 33431
(561) 391-2888 FAX: (561) 391-2862
WWW.FLBENGINEERING.COM
CERTIFICATE OF AUTHORIZATION: #9885

TRACO
Windows & Doors Inc.
71 Progress Avenue
Cranberry Township, PA 16166

SERIES DORAL 3
OUTSWING ALUMINUM PATIO DOOR
(LARGE MISSILE)

REMARKS	DRWN	CHKD	DATE
ORIGINAL	MEH	FLB	01/21/04
2004 FBC	CL	FLB	09/05/05

04-113-001B
PAGE SCALE:
DESCRIPTION:

1 6

09/27/2005 - 2:54pm Andrei F:\01 Project Files\Traco\2004 Jobs\Traco Doral 3 Outswing Door Large Missile (04-113-001b)\04-113-001b Traco Doral 3 Outswing Door + Sidelites (Large Missile) rev0.3.dwg

LARGE MISSILE IMPACT RESISTANT OUTSWING DOOR WITH SIDELITES

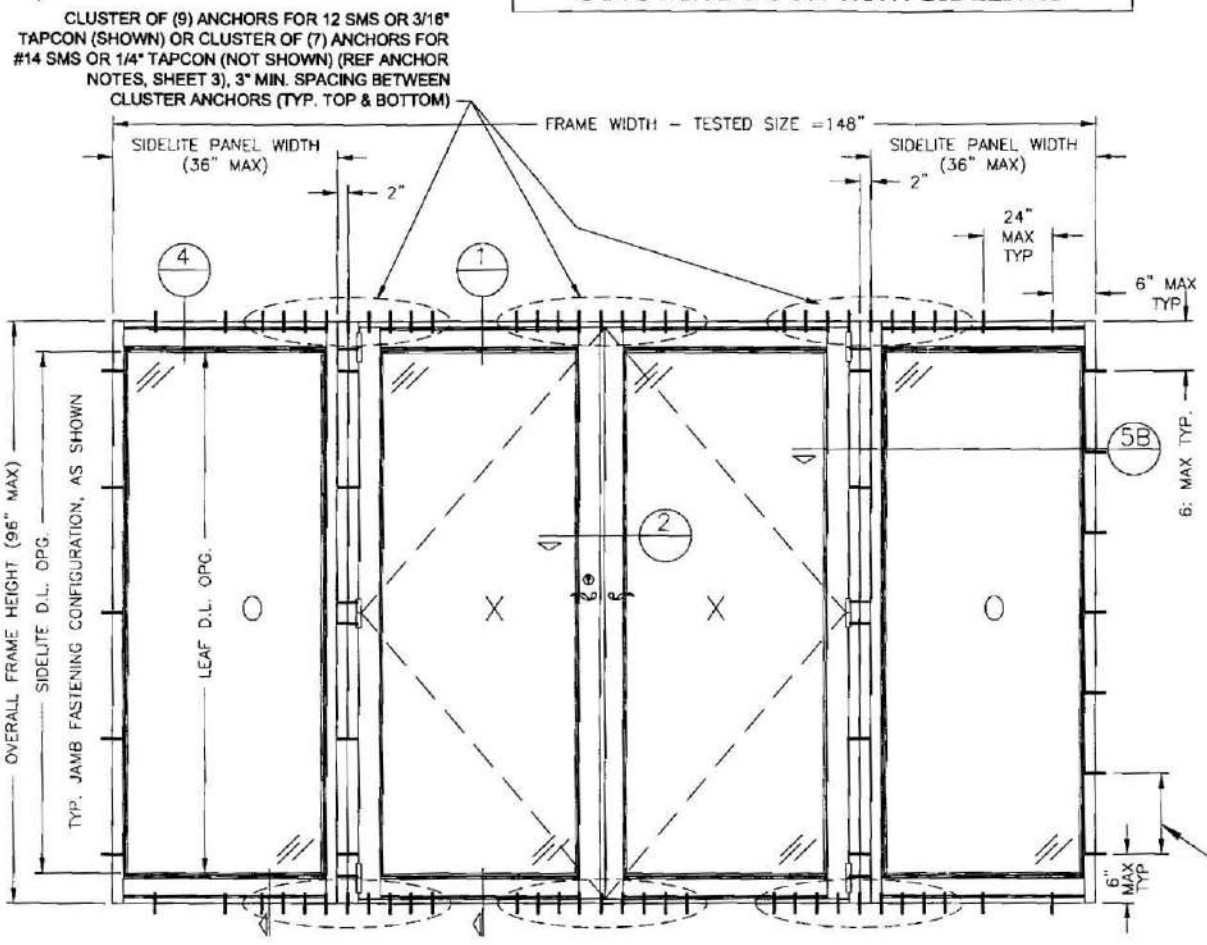

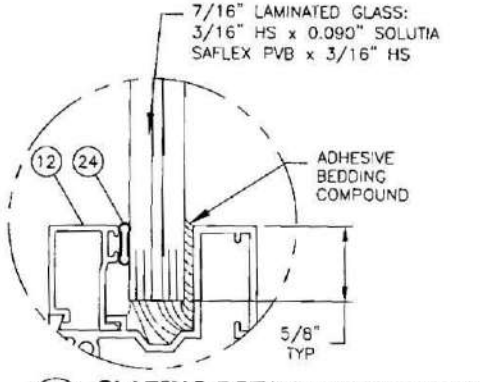

C GLAZING DETAIL (LEAF OR SIDELITE)
FULL SCALE

10.5" MAX TYP FOR #12 SMS OR 3/16" TAPCON (NOT SHOWN) AND 14" MAX TYP FOR #14 SMS OR 1/4" TAPCON (SHOWN)

B EXTERIOR ELEVATION: TUBE-MULLION SIDELITES
AS SHOWN, OR OXX, XXO, OXO, XO, OX, XX, O, or X CONFIG
USE TYP. JAMB FASTENING CONFIGURATION FOR ALL CASES, AS SHOWN
(N.T.S.)

DESIGN PRESSURES:
+90 PSF / -90 PSF

PRODUCT REVISED
as complying with the Florida Building Code
Acceptance No. 05-1003.09
Expiration Date 04.26.10.9
By
Miami-Dade Product Control Division

FRANK L. BENNARDO, P.E.
PE0046549
09/27/2005

FRANK L. BENNARDO, P.E., INC.
CONSULTING ENGINEERS
4441 NORTH DIXIE HIGHWAY
BOCA RATON, FL 33431
(561) 391-2888 FAX: (561) 391-2882
WWW.FLBENGINEERING.COM
CERTIFICATE OF AUTHORIZATION #8685

TRACO
Windows & Doors Inc.
71 Progress Avenue
Cranberry Township, PA 16166

SERIES DORAL 3
OUTSWING ALUMINUM PATIO DOOR
(LARGE MISSILE)

REMARKS	DRWN	CHKD	DATE
ORIGINAL	MEH	FLB	07/21/04
2004 FBC	GL	FLB	09/06/05

04-113-001B
PAGE SCALE:
DESCRIPTION:

2 of 6

09/27/2005 - 2:54pm Andrei F:\01 Project Files\Traco\2004 Jobs\Traco Doral 3 Outswing Door Large Missile (04-113-001b)\04-113-001b Traco Doral 3 Outswing Door + Sidelites (Large Missile) rev0.3.dwg

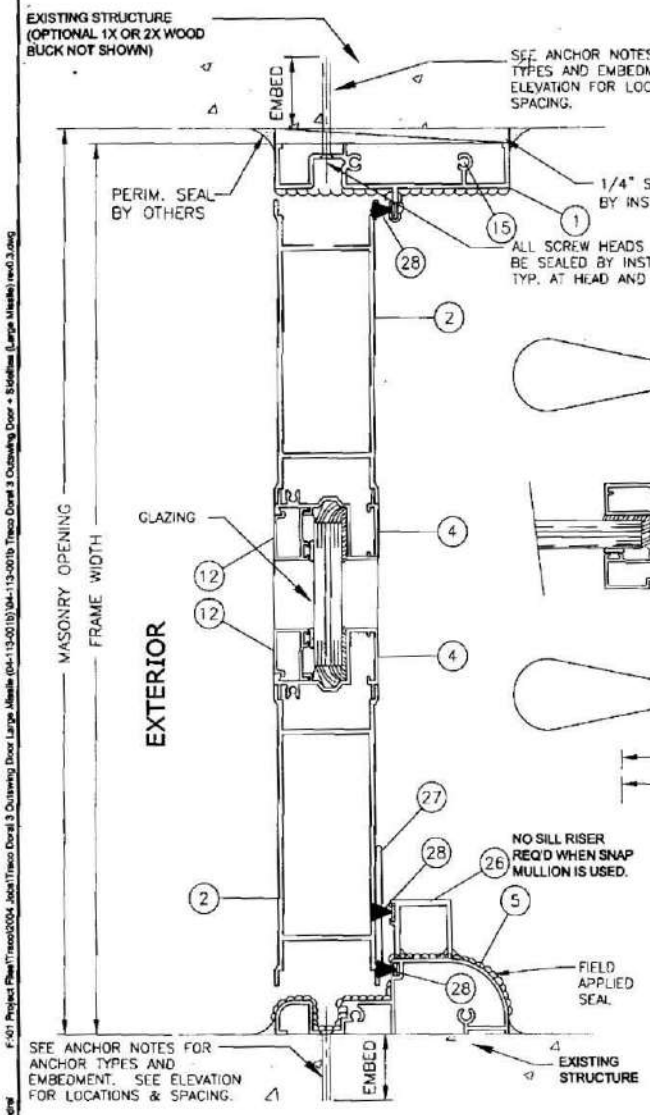

1 SECTION OF RESIDENTIAL DOOR
HALF SCALE

NOTE:
EXTERIOR AND INTERIOR FINISHES, BREAK METALS AND FLASHING BY OTHERS.

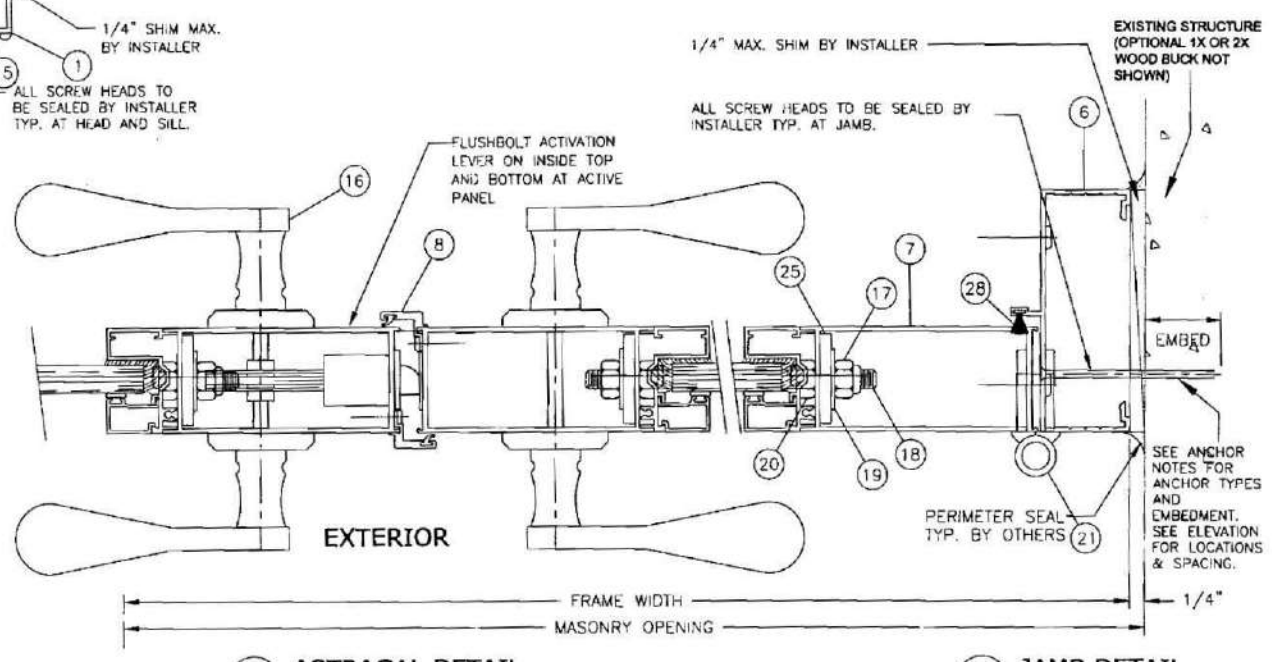

2 ASTRAGAL DETAIL
HALF SCALE

3 JAMB DETAIL
HALF SCALE

ANCHOR NOTES:

1. ANCHORS SHALL BE INSTALLED IN ACCORDANCE WITH MANUFACTURER'S RECOMMENDATIONS.
2. ANCHOR EMBEDMENT SHALL BE INTO BASE MATERIAL, EXCLUDING STUCCO OR OTHER WALL FINISH.
3. BASE MATERIAL SHALL BE WOOD (G=0.55 OR GREATER SPECIFIC GRAVITY), GROUT-FILLED BLOCK (MIN 2000 psi COMPRESSIVE STRENGTH FOR GROUT), OR CONCRETE (MIN 3000 PSI).
4. SEE EXTERIOR ELEVATIONS FOR ANCHOR LOCATIONS AND SPACING.
5. ENSURE MINIMUM OF 2-1/2" EDGE DISTANCE FOR ALL ANCHORS INTO GROUT-FILLED BLOCK OR CONCRETE, AND MINIMUM OF 1-1/2" EDGE DISTANCE FOR ALL WOOD ANCHORS.
6. ANCHOR OPTIONS FOR INSTALLATION ARE AS FOLLOWS:

TO 2x WOOD BUCK OR WOOD STRUCTURE
#12 SMS, 3/16" OR 1/4" TAPCONS (ITW OR ELCO) WITH 1-1/2" MINIMUM EMBEDMENT.

TO CONC OR GROUT-FILLED BLOCK
(DIRECTLY OR THRU 1x OR 2x WOOD BUCK)
3/16" OR 1/4" TAPCONS (ITW OR ELCO)
WITH 1-1/4" MINIMUM EMBEDMENT TO CONC OR GROUT-FILLED BLOCK.

PRODUCT REVISED
as complying with the Florida Building Code
Acceptance No. 05-1009.09
Expiration Date 09/22/09
By
Miami-Dade Product Control Division

FRANK L. BENNARDO, P.E.
PE0046543
09/27/2005

FRANK L BENNARDO, P.E., INC.
CONSULTING ENGINEERS
4441 NORTH DIXIE HIGHWAY
BOCA RATON, FL 33431
(561) 391-2888 FAX: (561) 391-2882
WWW.FLENGINEERING.COM
CERT. OF AUTHORIZATION #8885

TRACO
Windows & Doors Inc.
71 Progress Avenue
Cranberry Township, PA 16166

SERIES DORAL 3
OUTSWING ALUMINUM PATIO DOOR
(LARGE MISSILE)

REMARKS	DRWN	CHKD	DATE
ORIGINAL	MEH	FLB	07/21/04
3RX REC	CL	FLB	08/06/05

04-113-001B

PAGE SCALE:
DESCRIPTION:

3

F:\01 Project Files\Traco\2004 Jobs\Traco Doral 3 Outswing Door Large Missile (04-113-001B)\04-113-001b Traco Doral 3 Outswing Door + Sidelites (Large Missile) rev0.3.dwg
09/27/2005 - 2:54pm Andrej

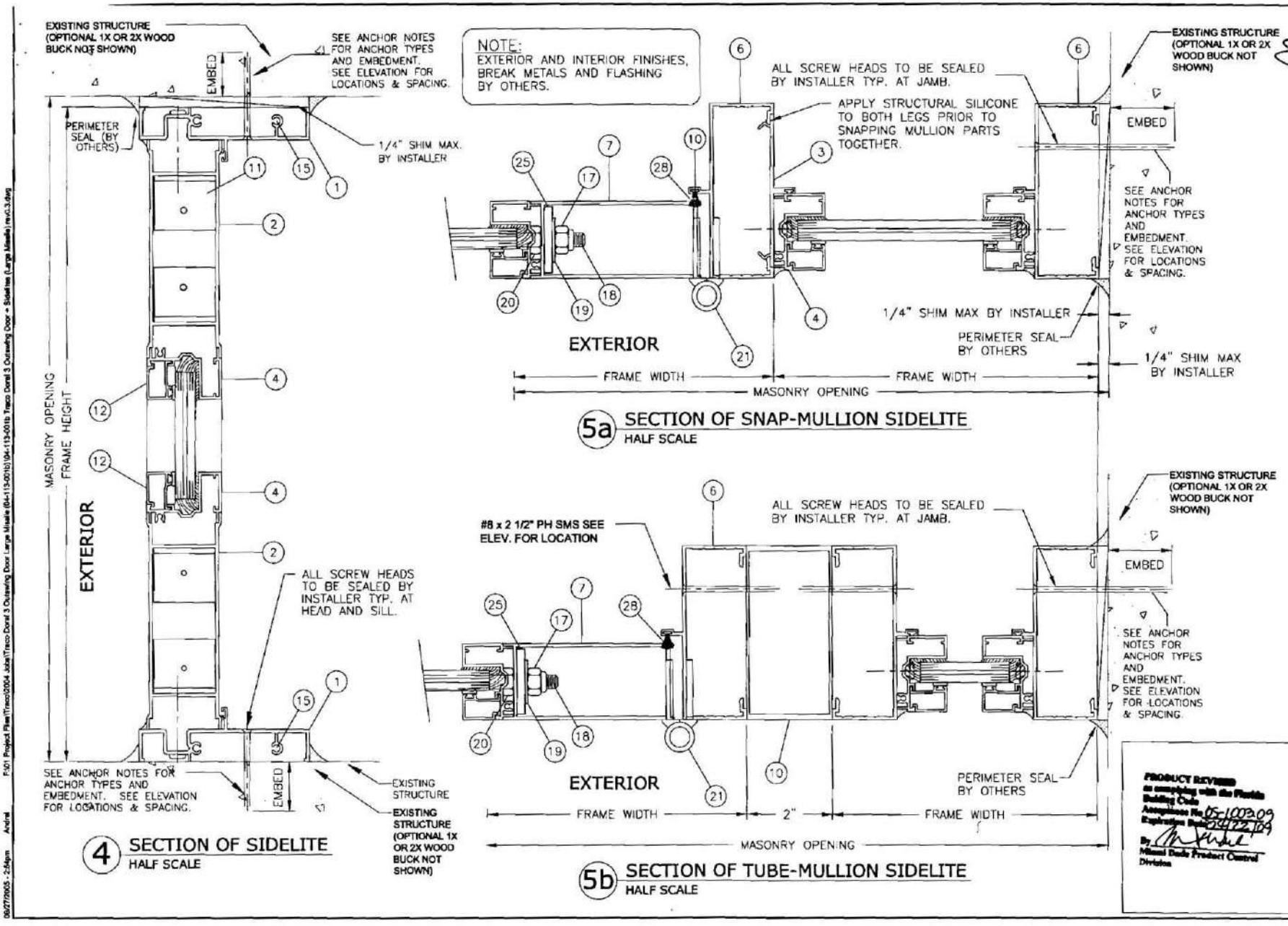

4 SECTION OF SIDELITE
HALF SCALE

5a SECTION OF SNAP-MULLION SIDELITE
HALF SCALE

5b SECTION OF TUBE-MULLION SIDELITE
HALF SCALE

PRODUCT REVIEWED as complying with the Florida Building Code
Acceptance No. 05-1003.09
Expiration Date 04/22/09
By [signature]
Miami Dade Product Control Division

FRANK L. BENNARDO, P.E. # PE0046549
09/27/2005

FRANK L. BENNARDO, P.E., INC.
CONSULTING ENGINEERS
4441 NORTH DIXIE HIGHWAY
BOCA RATON, FL 33431
(561) 391-2888 FAX: (561) 391-2882
WWW.FLBENGINEERING.COM
CERTIFICATE OF AUTHORIZATION: #9685

TRACO
Windows & Doors Inc.
71 Progress Avenue
Cranberry Township, PA 16166

SERIES DORAL 3
OUTSWING ALUMINUM PATIO DOOR
(LARGE MISSILE)

REMARKS	DRWN	CHKD	DATE
ORIGINAL	MEH	FLB	01/21/04
ZOM FBC	CL	FLB	09/06/05

04-113-001B
PAGE SCALE:
DESCRIPTION:

4

8

F:\01 Project Files\Traco\2004 Jobs\Traco Doral 3 Outswing Door Large Missile (04-113-001b)\04-113-001b Traco Doral 3 Outswing Door + Sidelites (Large Missile) rev0.3.dwg
06/27/2005 - 2:54pm Andrel

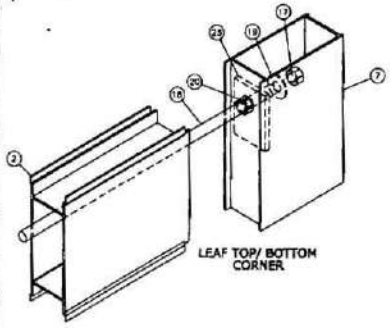

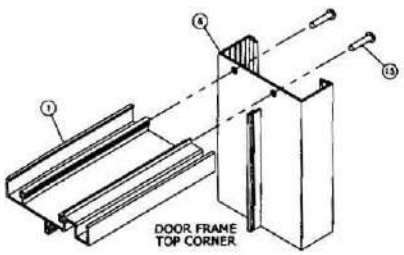

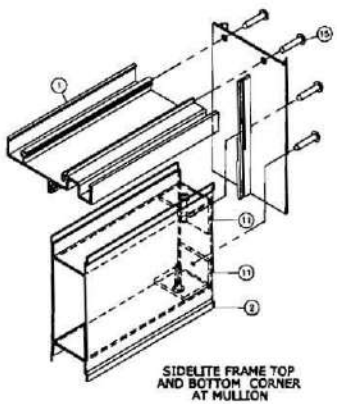

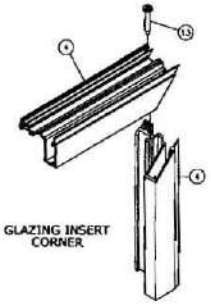

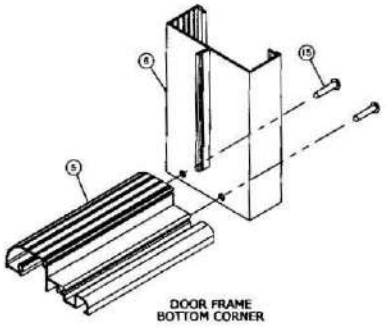

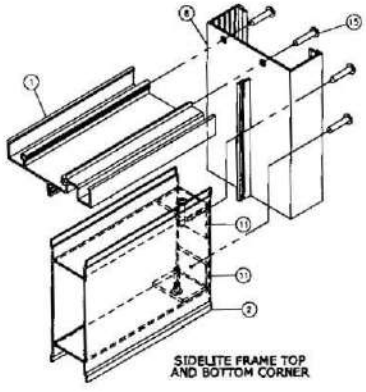

SEALANTS:
ALL FRAME AND LEAF CORNERS, INSTALLATION SCREWS AT SILL AND JAMBS AND BOTTOM GLAZING BEAD SHALL BE SEALED WITH SCHEE MOREHEAD 5504 SEALANT.

HINGES:
4" LONG ALUM. BUTT HINGES WITH .312 DIA X 2-1/2" ALUM PIN, BRASS SPACER AND NYLON CAPS AT 3 1/2" FROM TOP & BOTTOM AND AT MIDSPAN

LOCKS:
STANDARD STEEL THROW BOLT LOCK, KEY OPERATED ON EXTERIOR AND THUMB TURN ON INTERIOR 39 1/2" FROM BOTTOM AT ACTIVE LEAF LOCK STILE

CONVENTIONAL LOCKSET WITH LEVER TYPE OPERATOR HANDLE AT ACTIVE LEAF LOCK STILE NEAR MIDSPAN

STANDARD FLUSH BOLTS, MANUALLY OPERATED AT TOP AND BOTTOM OF EACH ACTIVE AND INACTIVE LEAF

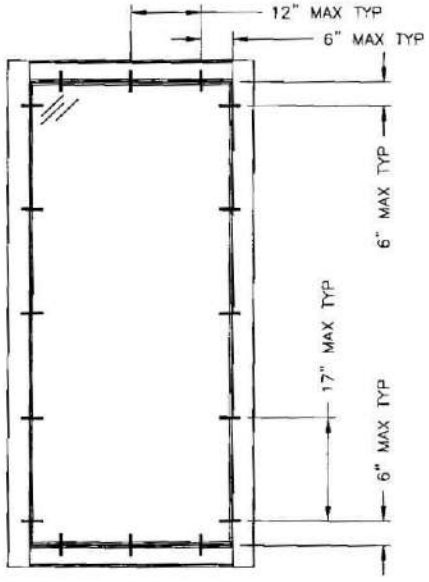

GLAZING INSERT FASTENER SPACING

PRODUCT REVIEWED as complying with the Florida Building Code
Acceptance No. 05-1003.09
Expiration Date 04-22-09
By: [signature]
Miami-Dade Product Control Division

FRANK L. BENNARDO, P.E.
PE0046549
09/27/2005

FRANK L. BENNARDO, P.E., INC.
CONSULTING ENGINEERS
4441 NORTH DIXIE HIGHWAY
BOCA RATON, FL 33431
(561) 391-2888 FAX: (561) 391-2862
WWW.FLBENGINEERING.COM
CERTIFICATE OF AUTHORIZATION: #6085

TRACO
Windows & Doors Inc.
71 Progress Avenue
Cranberry Township, PA 16166

SERIES DORAL 3
OUTSWING ALUMINUM PATIO DOOR
(LARGE MISSILE)

REMARKS	DRWN	CHKD	DATE
ORIGINAL	MEH	FLB	6/12/04
2004 REC	CL	FLB	09/06/05

04-113-001B

PAGE SCALE:

DESCRIPTION:

5

6

09/27/2005 - 2:54pm Andrzej F:\01 Project Files\Traco\2004\ Jobs\Traco Doral 3 Outswing Door Large Missile (04-113-001b)\04-113-001b Traco Doral 3 Outswing Door + Sidelites (Large Missile) rev0.3.dwg

MATERIAL LIST					
ITEM NO.	PART NUMBER	QUANTITY	DESCRIPTION	MATERIAL	MANF./SUPPLIER/REMARKS
1	050-338	1/DOOR 2/SIDELITE	ATRIUM FRAME HEAD ATRIUM FRAME HEAD OR SILL	6063-T6	TIFTON OR EQUIV.
2	050-389	2/ LEAF	DOOR LEAF TOP & BOTTOM RAIL	6063-T5	ALUMAX OR EQUIV.
3	050-002	1/ SIDELITE	SNAP CANTILEVER	6063-T5	–
4	050-763	4/ GLASS LITE	GLAZING SUB FRAME	6063-T6	TIFTON OR EQUIV.
5	050-138	1 @ DOOR	THREASHOLD	6063-T5	ALUMAX OR EQUIV.
6	050-292	2/ DOOR 1/ SIDELITE	ATRIUM FRAME JAMB	6063-T5	TIFTON OR EQUIV.
7	051-394	2/ LEAF	RESIDENTIAL DOOR PANEL VERTICAL STILE	6063-T5	TIFTON OR EQN.
8	050-455	1/ LEAF	GAP CLOSURE	6063-T5	TIFTON OR EQUIV.
9	–	–	–	–	–
10	H-1006	AS REQD.	2" X 4" TUBE MULLION	6063-T5	TRECO OR EQUIV.
11	050-124	AS REQD.	1" x 1 1/4" X 1/8" ANGLE	ALUMINUM	–
12	050-764	AS REQD.	GLAZING BEAD	6063-T6	TIFTON OR EQUIV.
13	012-00-401	AS REQD.	#10 X 1/2" FLAT HEAD SCREW	–	–
14	AS REQD.	–	1/8" SHIM	PLASTIC	–
15	–	8/ FRAME	#10 X 1" DOOR FRAME ASSEMBLY SCREW	–	–
16	007-14-039A	AS REQD.	DOOR HANDLE	–	MARBOLLO
17	–	4/ LEAF	1/2" SELF LOCK NUT	STEEL	–
18	–	2/ LEAF	1/2" ROD (2 X PANELS)	STEEL	–
19	–	4/ LEAF	1/2" FLAT WASHER	STEEL	–
20	–	4/ LEAF	1/2" REGULAR NUT	–	–
21	051-181	3/ LEAF	HINGES	–	–
22	007-10-051	2/ LEAF	STANDARD FLUSH BOLT	–	–
23	–	4	#8 x 1/2" SMS	–	–
24	20-4164	AS REQD.	BULB VINYL	VINYL	–
25	–	4/ LEAF	BLOCK ROD GUIDE	–	–
26	050-10-765	1	SILL RISER	ALUMINUM	SILL RISER
27	–	1/ LEAF	1 X .050 ALUM BAR (BETWEEN VERTICALS)	ALUMINUM	–
28	047-10-014	AS REQD.	FIN SEAL WEATHER-STRIPPING	–	–

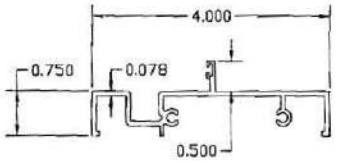

ATRIUM FRAME HEAD/SILL

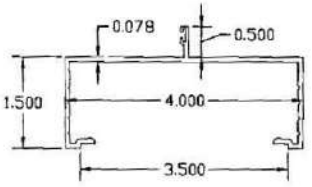

DOOR FRAME JAMB

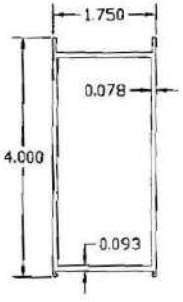

DOOR STILE

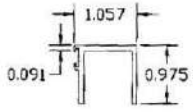

SILL RISER

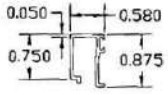

GLAZING BEAD

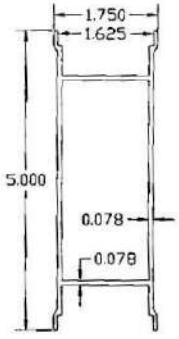

DOOR TOP/ BOTTOM RAIL

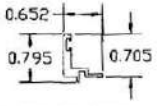

GAP CLOSURE

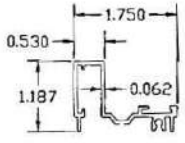

GLAZING SUBFRAME

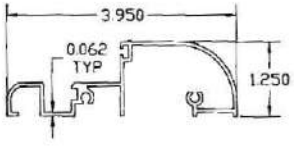

THRESHOLD

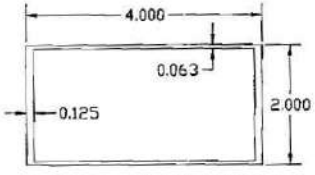

H-1006 TUBE MULLION

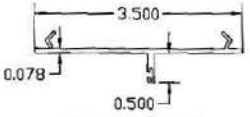

DOOR STOP

PRODUCT REVISED
in complying with the Florida Building Code
Acceptance No: FL 05-1003.09
Expiration Date: 04/22/09
By: Product Control Division

FRANK L. BENNARDO, P.E.
PE0046549
09/27/2005

FRANK L. BENNARDO, P.E., INC.
CONSULTING ENGINEERS
4441 NORTH DIXIE HIGHWAY
BOCA RATON, FL 33431
(561) 391-2868 FAX: (561) 391-2962
WWW.ENGINEERING.COM
CERTIFICATE OF AUTHORIZATION: #6885

TRACO
Windows & Doors Inc.
71 Progress Avenue
Cranberry Township, PA 16166

SERIES DORAL 3
OUTSWING ALUMINUM PATIO DOOR
(LARGE MISSILE)

REMARKS	DRWN	CHKD	DATE
ORIGINAL	MEH	FLB	07/27/04
3001 FBC	CL	FLB	09/06/05

04-113-001B

PAGE SCALE:

DESCRIPTION:

6

09/27/2005 - 2:54pm Andrial F:\01 Project Files\Traco\2004 Jobs\Traco Doral 3 Outswing Door Large Missile (04-113-001b)\04-113-001b Traco Doral 3 Outswing Door + Sidelites (Large Missile) rev0.3.dwg

Project Summary
Entire House
PREPARED FOR R G ISHMAN ARCHITECT

Job: #2136-1436
Date: 1/7/2008
By: SEQUENZIA

2117 HOLLYWOOD BLVD, HOLLYWOOD, FL 33020 Phone: 954 929 9895

Project Information

For: ADDITION TO SINGLE FAMILY RESIDECE
1404 JACKSON STREET, HOLLYWOOD, FL 33020

Notes: PREPARED FOR JURISDICTION #162100 SOUTH #8

APR 14 2008

Design Information

Weather: Fort Lauderdale/Hollywood, FL, US

Winter Design Conditions

Outside db	60	°F
Inside db	70	°F
Design TD	20	°F

Summer Design Conditions

Outside db	90	°F
Inside db	75	°F
Design TD	15	°F
Daily range	L	
Relative humidity	50	%
Moisture difference	61	gr/lb

Heating Summary

Building heat loss	6242	Btuh
Ventilation air	27	cfm
Ventilation air loss	591	Btuh
Design heat load	6834	Btuh

Sensible Cooling Equipment Load Sizing

Structure	11475	Btuh
Ventilation	443	Btuh
Design temperature swing	3.0	°F
Use mfg. data	y	
Rate/swing multiplier	1.00	
Total sens. equip. load	11919	Btuh

Infiltration

Method	Simplified
Construction quality	Average
Fireplaces	0

	Heating	Cooling
Area (ft²)	315	315
Volume (ft³)	2520	2520
Air changes/hour	1.05	0.55
Equiv. AVF (cfm)	44	23

Latent Cooling Equipment Load Sizing

Internal gains	0	Btuh
Ventilation	1124	Btuh
Infiltration	865	Btuh
Total latent equip. load	2439	Btuh
Total equipment load	14357	Btuh
Req. total capacity at 0.70 SHR	1.4	ton

Heating Equipment Summary

Make GE
Trade ZONELINE
Model PTCA STRIP

Efficiency	80	AFUE
Heating input	11700	Btuh
Heating output	11700	Btuh
Temperature rise	17	°F
Actual air flow	614	cfm
Air flow factor	0.098	cfm/Btuh
Static pressure	0.50	in H2O
Space thermostat		

Cooling Equipment Summary

Make GE
Trade ZONELINE
Cond AZ25E15D3B
Coil PTAC

Efficiency	9.6	EER
Sensible cooling	10220	Btuh
Latent cooling	4380	Btuh
Total cooling	14600	Btuh
Actual air flow	614	cfm
Air flow factor	0.054	cfm/Btuh
Static pressure	0.50	in H2O
Load sensible heat ratio	83	%

Printout certified by ACCA to meet all requirements of Manual J 8th Ed.

Right-J8 Worksheet
Entire House
PREPARED FOR R G ISHMAN ARCHITECT

2117 HOLLYWOOD BLVD, HOLLYWOOD, FL 33320 Phone: 954 929 9695

Job: #2136-1436
Date: 1/7/2008
By: SEQUENZIA

		Entire House	DEN
1	Room name		
2	Exposed wall	57.0 ft	29.0 ft
3	Ceiling height	8.0 ft d	8.0 ft heat/cool
4	Room dimensions		11.0 x 15.0 ft
5	Room area	315.0 ft²	165.0 ft²

	Ty	Construction number	U-value (Btuh/ft²-°F)	Or	HTM (Btuh/ft²)		Area (ft²) or perimeter (ft)		Load (Btuh)		Area (ft²) or perimeter (ft)		Load (Btuh)	
					Heat	Cool	Gross	N/P/S	Heat	Cool	Gross	N/P/S	Heat	Cool
6	W	13A-5ocs	0.125	n	2.50	2.46	88	76	190	187	88	76	190	187
	G	1A-c1ob	1.080	n	21.60	31.92	12	0	259	383	12	0	259	383
	W	13A-5ocs	0.125	s	2.50	2.46	128	116	290	285	0	0	0	0
	G	1A-c1ob	1.080	s	21.60	35.03	12	0	259	420	0	0	0	0
11	W	13A-5ocs	0.125	w	2.50	2.46	184	100	250	246	120	72	180	177
	G	1A-c1ob	1.080	w	21.60	88.27	84	0	1814	7415	48	0	1037	4237
	C	16B-19ad	0.049	-	0.98	2.66	315	315	309	839	165	165	162	439
	F	22A-tph	1.358	-	27.16	0.00	315	57	1548	0	165	29	788	0
	Envelope loss/gain								4920	9774			2615	5423
12	a) Infiltration								969	381			504	198
	b) Ventilation								0	0			0	0
13	Internal gains:	Occupants @ 230					0			0	0			0
		Appliances @ 1200					0			0	0			0
	Less external load								0	0			0	0
	Less transfer								0	0			0	0
	Redistribution								0	0			0	0
14	Subtotal								5889	10155			3119	5621
15	Duct loads						6%	13%	353	1320	6%	13%	187	731
	Total room load								6242	11475			3307	6352
	Air required (cfm)								614	614			325	340

Printout certified by ACCA to meet all requirements of Manual J 8th Ed.

Right-J8 Worksheet
Entire House
PREPARED FOR R G ISHMAN ARCHITECT

2117 HOLLYWOOD BLVD, HOLLYWOOD, FL 33320 Phone: 954 929 9695

Job: #2136-1436
Date: 1/7/2008
By: SEQUENZIA

1	Room name					SUN ROOM									
2	Exposed wall					28.0 ft									
3	Ceiling height					8.0 ft		heat/cool							
4	Room dimensions					15.0 x 10.0 ft									
5	Room area					150.0 ft²									
	Ty	Construction number	U-value (Btuh/ft²-°F)	Or	HTM (Btuh/ft²)		Area (ft²) or perimeter (ft)		Load (Btuh)		Area or perimeter		Load	
					Heat	Cool	Gross	N/P/S	Heat	Cool	Gross	N/P/S	Heat	Cool
6	W	13A-5ocs	0.125	n	2.50	2.46	0	0	0	0				
.	G	1A-c1ob	1.080	n	21.60	31.92	0	0	0	0				
.	W	13A-5ocs	0.125	s	2.50	2.46	128	116	290	285				
.	G	1A-c1ob	1.080	s	21.60	35.03	12	0	259	420				
11	W	13A-5ocs	0.125	w	2.50	2.46	64	28	70	69				
	G	1A-c1ob	1.080	w	21.60	88.27	36	0	778	3178				
	C	16B-19ad	0.049	-	0.98	2.66	150	150	147	399				
	F	22A-tph	1.358	-	27.16	0.00	150	28	760	0				
	Envelope loss/gain								2304	4351				
12	a) Infiltration								465	183				
	b) Ventilation								0	0				
13	Internal gains:	Occupants @ 230					0			0				
		Appliances @ 1200					0			0				
	Less external load								0	0				
	Less transfer								0	0				
	Redistribution								0	0				
14	Subtotal								2770	4534				
15	Duct loads						6%	13%	166	589				
	Total room load								2936	5123				
	Air required (cfm)								289	274				

Printout certified by ACCA to meet all requirements of Manual J 8th Ed.

D TERMINAL AIR CONDITIONERS AND HEAT PUMPS

PTHP's

- motors for quiet operation and higher efficiency
- ntly lubricated fan motors
- y
- e controls for better room temperature control
- isting GE Zoneline wall cases
- air filters for ease of cleaning and efficient maintenance
- leading EER's and COP's on heat pumps
- desk control compatibility
- control thermostat compatibility
- ic frost control
- **-197** through **B93-199** series includes electronic re limiting; power cords, **G00-188** through **G00-190**, are ately
- -year warranty parts and labor; second through fifth year labor on sealed refrigeration system; second through limited parts warranty
- e sold separately

lable from participating Johnstone Supply stores by order:

- models (require direct connection to comply with National Code)
- on treated models required in seacoast and e environments
- BtuH
- pumps with internal condensate removal
- d 20A models

APR 14 2008

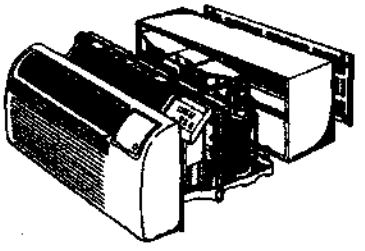

	F/L Amps	L/R Amps	Fuse Size Amps	COP	Width	Height	Depth	Shipping Wt. (lbs.	Order #
D3B	3.6/3.9	21	20	–	42"	16"	13-3/4"	122	
D5B	4.9/5.3	33	20	–	42"	16"	13-3/4"	131	
B	7.0/7.5	38	20	–	42"	16"	13-3/4"	138	
03B	3.6/3.9	21	20	3.5/3.5	42"	16"	13-3/4"	127	
03B	4.9/5.3	33	20	3.3/3.3	42"	16"	13-3/4"	131	
5D3B	7.0/7.5	38	20	3.1/3.1	42"	16"	13-3/4"	145	
DAB	3.6/3.9	21	20	3.5/3.5	42"	16"	13-3/4"	122	
2DAB	5.1/5.5	33	20	3.3/3.3	42"	16"	13-3/4"	132	
5DAB	6.7/7.3	38	20	3.1/3.1	42"	16"	13-3/4"	143	

	Type	Cool Btuh	Heat Btuh	Strip Heat Btuh	EER	Dehumidifying Pints/Hr.	Order #
D3B	A/C	9,000/8,800	–	11,700/9,600	11.3	2.7	
D3B	A/C	11,700/11,500	–	11,700/9,600	10.7	3.6	
5D3B	A/C	14,600/14,300	–	11,700/9,600	9.6	4.5	
D3B	Heat Pump	9,000/8,800	8,400/8,200	11,700/9,600	11.3	2.7	
2D3B	Heat Pump	11,700/11,500	10,900/10,700	11,700/9,600	10.7	3.6	
5D3B	Heat Pump	14,600/14,300	13,400/13,200	11,700/9,600	9.6	4.5	
DAB	Heat Pump	9,000/8,800	8,400/8,200	11,700/9,600	11.3	2.8	
2DAB	Heat Pump	11,800/11,600	10,900/10,700	11,700/9,600	10.7	3.6	
5DAB	Heat Pump	14,700/14,400	13,400/13,200	11,700/9,600	10.0	4.8	

ESSORIES FOR GE ZONELINE PACKAGED TERMINAL UNITS

#	Description	Features	Order #
77A4	Wall Case	Molded SMC Fiberglass-Reinforced Polyester Compound	
10	Drain Kit	For Internal or External Disposal of Condensate	
60	Aluminum Grille	Standard Aluminum Grille	
71	Wall Case	Insulated, Galvanized Steel Wall Sleeve	
3152	15A Power Cord	Power Cord for B93-197, B93-198 & B93-199	
3202	20A Power Cord	Power Cord for B93-197, B93-198 & B93-199	
3302	30A Power Cord	Power Cord for B93-197, B93-198 & B93-199	

Call your local Johnstone Supply for competitive prices on these products

- Solid-state controls for better room temperature
- Fits all existing GE Zoneline wall cases
- Upfront air filters for ease of cleaning and efficient maintenance
- Industry leading EER's and COP's on heat pumps
- Central desk control compatibility
- Remote control thermostat compatibility
- Automatic frost control
- 5200 **B93-197** through **B93-199** series includes electronic temperature limiting; power cords, **G80-188** through **G80-190**, are sold separately
- Full one-year warranty parts and labor; second through fifth year parts and labor on sealed refrigeration system; second through fifth year limited parts warranty
- Wall case sold separately

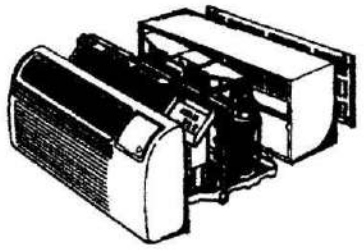

Also available from participating Johnstone Supply stores by special order:

- 265V models (require direct connection to comply with National Electric Code)
- Corrosion treated models required in seacoast and corrosive environments
- 7,000 BtuH
- Heat pumps with internal condensate removal
- 15A and 20A models

Model #	F/L Amps	L/R Amps	Fuse Size Amps	COP	Width	Height	Depth	Shipping Wt. Lbs.	Order #
AZ25E09D3B	3.6/3.9	21	20	–	42"	16"	13-3/4"	122	B93-191
AZ25E12D3B	4.9/5.3	33	20	–	42"	16"	13-3/4"	131	B93-192
AZ25E15D3B	7.0/7.5	38	20	–	42"	16"	13-3/4"	138	B93-193
AZ35H09D3B	3.6/3.9	21	20	3.5/3.5	42"	16"	13-3/4"	127	B93-194
AZ35H12D3B	4.9/5.3	33	20	3.3/3.3	42"	16"	13-3/4"	131	B93-195
AZ35H15D3B	7.0/7.5	38	20	3.1/3.1	42"	16"	13-3/4"	145	B93-196
AZ55H09DAB	3.6/3.9	21	20	3.5/3.5	42"	16"	13-3/4"	122	B93-197
AZ55H12DAB	5.1/5.5	33	20	3.3/3.3	42"	16"	13-3/4"	132	B93-198
AZ55H15DAB	6.7/7.3	38	20	3.1/3.1	42"	16"	13-3/4"	143	B93-199

Model #	Type	Cool Btu/H	Heat Btu/H	Strip Heat Btu/H	EER	Dehumidify Pints/Hr.	Order #
AZ25E09D3B	A/C	9,000 /8,800	–	11,700 /9,600	11.3	2.7	B93-191
AZ25E12D3B	A/C	11,700/11,500	–	11,700 /9,600	10.7	3.6	B93-192
AZ25E15D3B	A/C	14,600/14,300	–	11,700 /9,600	9.6	4.5	B93-193
AZ35H09D3B	Heat Pump	9,000/8,800	8,400/8,200	11,700 /9,600	11.3	2.7	B93-194
AZ35H12D3B	Heat Pump	11,700/11,500	10,900/10,700	11,700 /9,600	10.7	3.6	B93-195
AZ35H15D3B	Heat Pump	14,600/14,300	13,400/13,200	11,700 /9,600	9.6	4.5	B93-196
AZ55H09DAB	Heat Pump	9,000/8,800	8,400/8,200	11,700 /9,600	11.3	2.8	B93-197
AZ55H12DAB	Heat Pump	11,800/11,600	10,900/10,700	11,700 /9,600	10.7	3.6	B93-198
AZ55H15DAB	Heat Pump	14,700/14,400	13,400/13,200	11,700 /9,600	10.0	4.8	B93-199

ACCESSORIES FOR GE ZONELINE PACKAGED TERMINAL UNITS

Mfg. #	Description	Features	Order #
RAB77A4	Wall Case	Molded SMC Fiberglass-Reinforced Polyester Compound	B93-200
RAD10	Drain Kit	For Internal or External Disposal of Condensate	B13-401
RAG60	Aluminum Grille	Standard Aluminum Grille	B93-201
RAB71	Wall Case	Insulated, Galvanized Steel Wall Sleeve	B93-202
RAK3152	15A Power Cord	Power Cord for B93-197, B93-198 & B93-199	G80-188
RAK3202	20A Power Cord	Power Cord for B93-197, B93-198 & B93-199	G80-189
RAK3302	30A Power Cord	Power Cord for B93-197, B93-198 & B93-199	G80-190

Call your local Johnstone Supply for competitive prices on these products

U.S. DEPARTMENT OF HOMELAND SECURITY
Federal Emergency Management Agency
National Flood Insurance Program

ELEVATION CERTIFICATE

Important: Read the instructions on pages 1-8.

OMB No. 1660-0008
Expires February 28, 2009

SECTION A - PROPERTY INFORMATION

For Insurance Company Use:

A1. Building Owner's Name MATHIAS KONDOLF — Policy Number

A2. Building Street Address (including Apt., Unit, Suite, and/or Bldg. No.) or P.O. Route and Box No. — Company NAIC Number
1404 JACKSON ST
City HOLLYWOOD State FL ZIP Code 33020

A3. Property Description (Lot and Block Numbers, Tax Parcel Number, Legal Description, etc.)
LOT 17 AND EAST 1/2 OF LOT 18, BLOCK 89 OF HOLLYWOOD, PLAT BOOK 1, PG 21, B.C.R., APN #: 51-42-15-02-6660

A4. Building Use (e.g., Residential, Non-Residential, Addition, Accessory, etc.) RESIDENTIAL

A5. Latitude/Longitude: Lat. 26°00'32.4" Long. 80°08'06.6" Horizontal Datum: ☐ NAD 1927 ☒ NAD 1983

A6. Attach at least 2 photographs of the building if the Certificate is being used to obtain flood insurance.

A7. Building Diagram Number 1

A8. For a building with a crawl space or enclosure(s), provide
- a) Square footage of crawl space or enclosure(s) 0 sq ft
- b) No. of permanent flood openings in the crawl space or enclosure(s) walls within 1.0 foot above adjacent grade 0
- c) Total net area of flood openings in A8.b 0 sq in

A9. For a building with an attached garage, provide:
- a) Square footage of attached garage 0 sq ft
- b) No. of permanent flood openings in the attached garage walls within 1.0 foot above adjacent grade 0
- c) Total net area of flood openings in A9.b 0 sq in

SECTION B - FLOOD INSURANCE RATE MAP (FIRM) INFORMATION

B1. NFIP Community Name & Community Number	B2. County Name	B3. State
HOLLYWOOD 125113	BROWARD	FL

B4. Map/Panel Number	B5. Suffix	B6. FIRM Index Date	B7. FIRM Panel Effective/Revised Date	B8. Flood Zone(s)	B9. Base Flood Elevation(s) (Zone AO, use base flood depth)
12011C0317	G	10/2/97	7/21/95	AE	8'

B10. Indicate the source of the Base Flood Elevation (BFE) data or base flood depth entered in Item B9.
☐ FIS Profile ☒ FIRM ☐ Community Determined ☐ Other (Describe) ____

B11. Indicate elevation datum used for BFE in Item B9: ☒ NGVD 1929 ☐ NAVD 1988 ☐ Other (Describe) ____

B12. Is the building located in a Coastal Barrier Resources System (CBRS) area or Otherwise Protected Area (OPA)? ☐ Yes ☒ No
Designation Date ____ ☐ CBRS ☐ OPA

SECTION C - BUILDING ELEVATION INFORMATION (SURVEY REQUIRED)

C1. Building elevations are based on: ☐ Construction Drawings* ☐ Building Under Construction* ☒ Finished Construction
*A new Elevation Certificate will be required when construction of the building is complete.

C2. Elevations – Zones A1-A30, AE, AH, A (with BFE), VE, V1-V30, V (with BFE), AR, AR/A, AR/AE, AR/A1-A30, AR/AH, AR/AO. Complete Items C2.a-g below according to the building diagram specified in Item A7.
Benchmark Utilized COUNTY Vertical Datum NGVD
Conversion/Comments ____

			Check the measurement used.
a)	Top of bottom floor (including basement, crawl space, or enclosure floor)	5.09	☒ feet ☐ meters (Puerto Rico only)
b)	Top of the next higher floor	N/A	☐ feet ☐ meters (Puerto Rico only)
c)	Bottom of the lowest horizontal structural member (V Zones only)	N/A	☐ feet ☐ meters (Puerto Rico only)
d)	Attached garage (top of slab)	N/A	☒ feet ☐ meters (Puerto Rico only)
e)	Lowest elevation of machinery or equipment servicing the building (Describe type of equipment in Comments)	10.09	☒ feet ☐ meters (Puerto Rico only)
f)	Lowest adjacent (finished) grade (LAG)	4.7	☒ feet ☐ meters (Puerto Rico only)
g)	Highest adjacent (finished) grade (HAG)	4.9	☒ feet ☐ meters (Puerto Rico only)

SECTION D - SURVEYOR, ENGINEER, OR ARCHITECT CERTIFICATION

This certification is to be signed and sealed by a land surveyor, engineer, or architect authorized by law to certify elevation information. *I certify that the information on this Certificate represents my best efforts to interpret the data available. I understand that any false statement may be punishable by fine or imprisonment under 18 U.S. Code, Section 1001.*

☒ Check here if comments are provided on back of form.

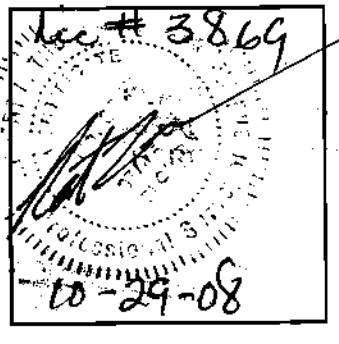

Certifier's Name ROBERT L.THOMPSON License Number 3869

Title PROFESSIONAL LAND SURVEYOR Company Name ACCURATE LAND SURVEYORS

Address 1150 E ATLANTIC BLVD City POMPANO BEACH State FL ZIP Code 33060

Signature _____ Date 10/29/08 Telephone 954-782-1441

IMPORTANT: In these spaces, copy the corresponding information from Section A.	For Insurance Company Use:
Building Street Address (including Apt., Unit, Suite, and/or Bldg. No.) or P.O. Route and Box No. 1404 JACKSON ST	Policy Number
City HOLLYWOOD State FL ZIP Code 33020	Company NAIC Number

SECTION D - SURVEYOR, ENGINEER, OR ARCHITECT CERTIFICATION (CONTINUED)

Copy both sides of this Elevation Certificate for (1) community official, (2) insurance agent/company, and (3) building owner.

Comments JOB NO. 01-4278C; ELECTRIC METER 10.09'NGVD

Signature ROBERT L. THOMPSON Date 10/29/08

☐ Check here if attachments

SECTION E - BUILDING ELEVATION INFORMATION (SURVEY NOT REQUIRED) FOR ZONE AO AND ZONE A (WITHOUT BFE)

For Zones AO and A (without BFE), complete Items E1-E5. If the Certificate is intended to support a LOMA or LOMR-F request, complete Sections A, B, and C. For Items E1-E4, use natural grade, if available. Check the measurement used. In Puerto Rico only, enter meters.

E1. Provide elevation information for the following and check the appropriate boxes to show whether the elevation is above or below the highest adjacent grade (HAG) and the lowest adjacent grade (LAG).
a) Top of bottom floor (including basement, crawl space, or enclosure) is _____.____ ☐ feet ☐ meters ☐ above or ☐ below the HAG.
b) Top of bottom floor (including basement, crawl space, or enclosure) is _____.____ ☐ feet ☐ meters ☐ above or ☐ below the LAG.

E2. For Building Diagrams 6-8 with permanent flood openings provided in Section A Items 8 and/or 9 (see page 8 of Instructions), the next higher floor (elevation C2.b in the diagrams) of the building is _____.____ ☐ feet ☐ meters ☐ above or ☐ below the HAG.

E3. Attached garage (top of slab) is _____.____ ☐ feet ☐ meters ☐ above or ☐ below the HAG.

E4. Top of platform of machinery and/or equipment servicing the building is _____.____ ☐ feet ☐ meters ☐ above or ☐ below the HAG.

E5. Zone AO only: If no flood depth number is available, is the top of the bottom floor elevated in accordance with the community's floodplain management ordinance? ☐ Yes ☐ No ☐ Unknown. The local official must certify this information in Section G.

SECTION F - PROPERTY OWNER (OR OWNER'S REPRESENTATIVE) CERTIFICATION

The property owner or owner's authorized representative who completes Sections A, B, and E for Zone A (without a FEMA-issued or community-issued BFE) or Zone AO must sign here. *The statements in Sections A, B, and E are correct to the best of my knowledge.*

Property Owner's or Owner's Authorized Representative's Name
ROBERT L. THOMPSON LICENSE NO. 3869

Address 1150 E ATLANTIC BLVD City POMPANO BEACH State FL ZIP Code 33060

Signature Date Telephone 954-782-1441

Comments

☐ Check here if attachments

SECTION G - COMMUNITY INFORMATION (OPTIONAL)

The local official who is authorized by law or ordinance to administer the community's floodplain management ordinance can complete Sections A, B, C (or E), and G of this Elevation Certificate. Complete the applicable item(s) and sign below. Check the measurement used in Items G8. and G9.

G1. ☒ The information in Section C was taken from other documentation that has been signed and sealed by a licensed surveyor, engineer, or architect who is authorized by law to certify elevation information. (Indicate the source and date of the elevation data in the Comments area below.)

G2. ☐ A community official completed Section E for a building located in Zone A (without a FEMA-issued or community-issued BFE) or Zone AO.

G3. ☐ The following information (Items G4.-G9.) is provided for community floodplain management purposes.

G4. Permit Number	G5. Date Permit Issued	G6. Date Certificate Of Compliance/Occupancy Issued

G7. This permit has been issued for: ☐ New Construction ☐ Substantial Improvement

G8. Elevation of as-built lowest floor (including basement) of the building: _____.____ ☐ feet ☐ meters (PR) Datum _____

G9. BFE or (in Zone AO) depth of flooding at the building site: _____.____ ☐ feet ☐ meters (PR) Datum _____

APPROVED
OCT 31 2008
CITY OF HOLLYWOOD, FLA.
FINAL SURVEY

Local Official's Name Title

Community Name Telephone

Signature Date

Comments

☒ Check here if attachments

1150 E. ATLANTIC BLVD.
POMPANO BEACH
FLORIDA 33060

ACCURATE LAND SURVEYORS, INC.

L.B. #3635

TEL. (954) 782-1441
FAX. (954) 782-1442

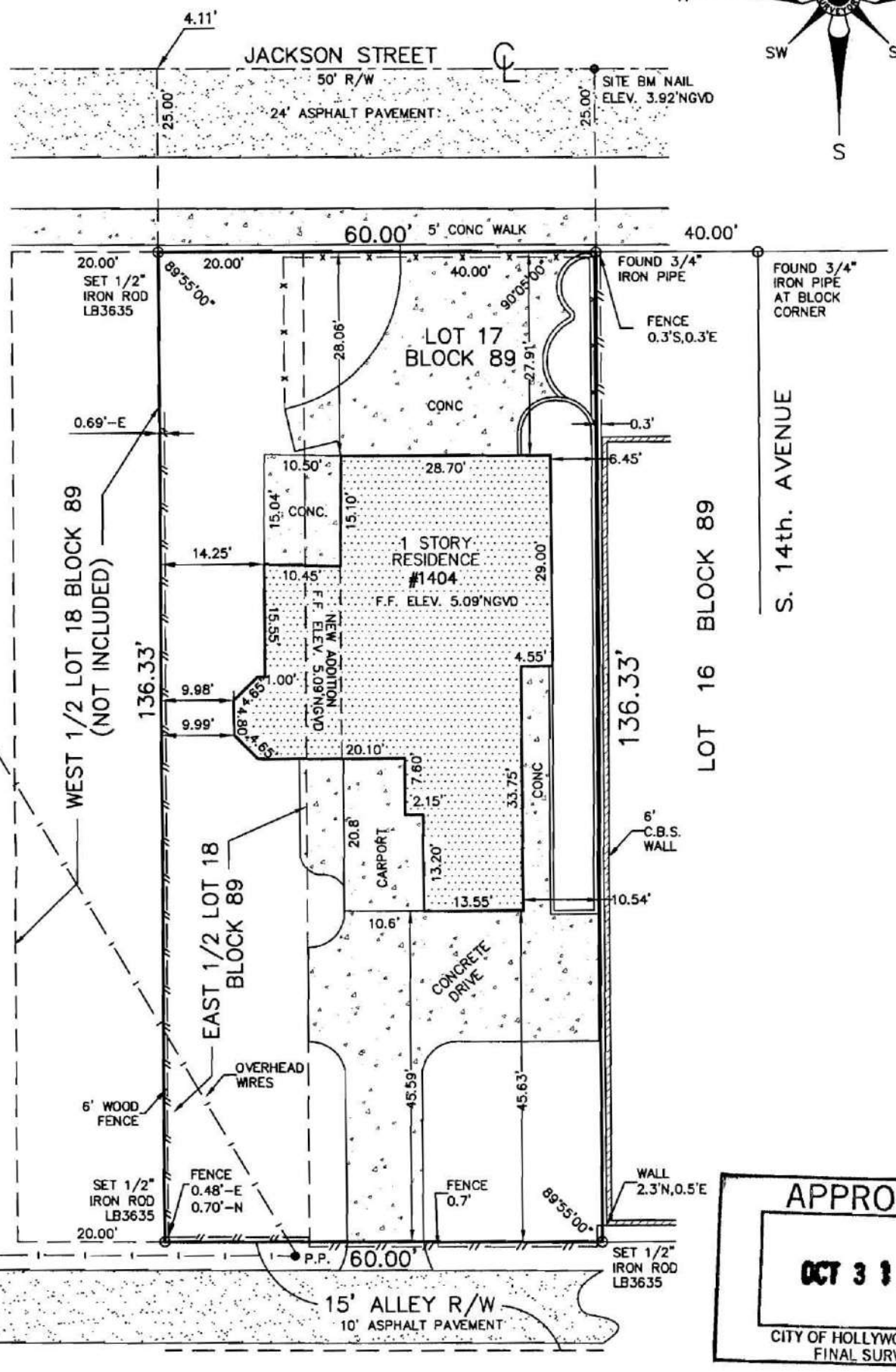

APPROVED
OCT 3 1 2008
CITY OF HOLLYWOOD, FLA.
FINAL SURVEY

20 0 10 20

GRAPHIC SCALE
1"=20'

6.69'

ELEVATIONS BASED ON N.G.V.D.

NOTES:

1. UNLESS OTHERWISE NOTED FIELD MEASUREMENTS ARE IN AGREEMENT WITH RECORD MEASUREMENTS.
2. BEARINGS SHOWN HEREON ARE BASED ON A BEARING OF N/A
3. THE LANDS SHOWN HEREON WERE NOT ABSTRACTED FOR OWNERSHIP, RIGHTS-OF-WAY, EASEMENTS, OR OTHER MATTERS OF RECORDS BY ACCURATE LAND SURVEYORS, INC.
4. OWNERSHIP OF FENCES AND WALLS IF ANY NOT DETEMINED.
5. THIS DRAWING IS THE PROPERTY OF ACCURATE LAND SURVEYORS, INC. AND SHALL NOT BE USED OR REPRODUCTED IN WHOLE OR IN PART WITHOUT WRITTEN AUTHORIZATION.
6. THIS SURVEY CONSISTS OF A MAP AND TEXT REPORT. ONE IS NOT VALID WITHOUT THE OTHER.
7. THIS SURVEY IS MADE FOR THE EXCLUSIVE USE OF THE CERTIFIED HEREON, TO BE VALID ONE YEAR FROM THE DATE OF SURVEY AS SHOWN.

CERTIFICATION:

THIS IS TO CERTIFY THAT I HAVE RECENTLY SURVEYED THE PROPERTY DESCRIBED IN THE FOREGOING TITLE CAPTION AND HAVE SET OR FOUND MONUMENTS AS INDICATED ON THIS SKETCH AND THAT SAID ABOVE GROUND SURVEY AND SKETCH ARE ACCURATE AND CORRECT TO THE BEST OF MY KNOWLEDGE AND BELIEF. I FURTHER CERTIFY THAT THIS SURVEY MEETS MINIMUM TECHNICAL STANDARDS UNDER RULE 61G17-6 FLORIDA ADMINISTRATIVE CODE, ADOPTED BY THE FLORIDA BOARD OF LAND SURVEYORS, MAY 1995.

SEAL
NOT VALID WITHOUT THE SIGNATURE AND THE ORIGINAL RAISED SEAL OF A FLORIDA LICENSED SURVEYOR AND MAPPER.

10-30-08

ROBERT L. THOMPSON (PRESIDENT)
PROFESSIONAL SURVEYOR AND MAPPER No.3869 - STATE OF FLORIDA

REVISIONS	DATE	BY
FINAL SURVEY SU-08-2722	10-28-08	AL/JMS
SPOT SURVEY SU-08-1787	07-10-08	AL/JMS

DATE OF SURVEY	DRAWN BY	CHECKED BY	FIELD BOOK	SCALE	SKETCH NUMBER
6-5-01 & 7/9/01	Q.D.I.	J.P.H.	756/1-2 & 755/75-76	1"=20'	SU-01-4278C

1309 S.E 1ST. STREET
POMPANO BEACH
FLORIDA 33060

ACCURATE LAND SURVEYORS, INC.
L.B. #3635

TEL. (954) 782-1441
FAX. (954) 782-1442

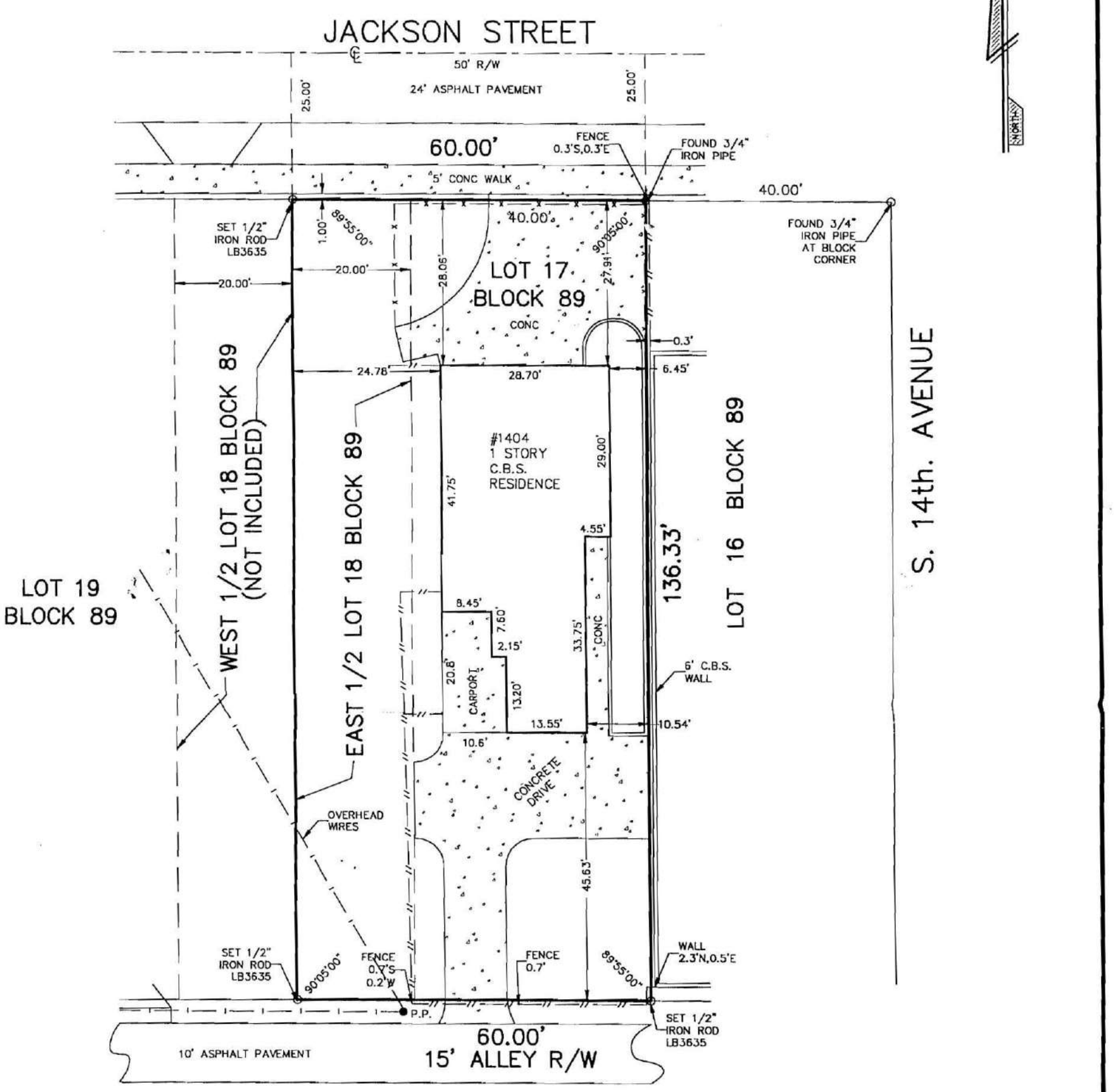

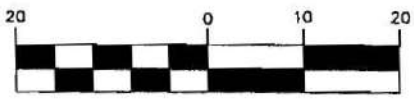

GRAPHIC SCALE
1"=20'

ES:

ILESS OTHERWISE NOTED FIELD MEASUREMENTS ARE IN AGREEMENT WITH RECORD
EASUREMENTS.

ARINGS SHOWN HEREON ARE BASED ON A BEARING OF N/A ALONG
IE _____ PLAT BOOK _____, PAGE _____
_____ COUNTY RECORDS.

E LANDS SHOWN HEREON WERE NOT ABSTRACTED FOR OWNERSHIP, RIGHTS-OF-WAY,
SEMENTS, OR OTHER MATTERS OF RECORDS BY ACCURATE LAND SURVEYORS, INC.

IIS SURVEY IS FOR TITLE AND MORTGAGE PURPOSES ONLY.

REVISIONS	DATE	BY

CERTIFICATION:

THIS IS TO CERTIFY THAT I HAVE RECENTLY SURVEYED THE PROPERTY DESCRIBED IN THE FOREGOING TITLE CAPTION AND HAVE SET OR FOUND MONUMENTS AS INDICATED ON THIS SKETCH AND THAT SAID ABOVE GROUND SURVEY AND SKETCH ARE ACCURATE AND CORRECT TO THE BEST OF MY KNOWLEDGE AND BELIEF. I FURTHER CERTIFY THAT THIS SURVEY MEETS MINIMUM TECHNICAL STANDARDS UNDER RULE 61G17-6 FLORIDA ADMINISTRATIVE CODE, ADOPTED BY THE FLORIDA BOARD OF LAND SURVEYORS, MAY 1995.

7-13-01

ROBERT L. THOMPSON (PRESIDENT)
PROFESSIONAL SURVEYOR AND MAPPER No.3869 - STATE OF FLORIDA

SEAL
NOT VALID WITHOUT THE SIGNATURE AND THE ORIGINAL RAISED SEAL OF A FLORIDA LICENSED SURVEYOR AND MAPPER.

TE OF SURVEY	DRAWN BY	CHECKED BY	FIELD BOOK
5/5/01 & 7/9/01	Q.D.I.	J.P.H.	755/1-2 & 755/75-76

SCALE 1"=20'

SKETCH NUMBER SU-01-4278C

209 S.E 1ST. STREET
POMPANO BEACH
FLORIDA 33060

ACCURATE LAND SURVEYORS, INC.

L.B. #3635

TEL. (954) 782-1441
FAX. (954) 782-1442

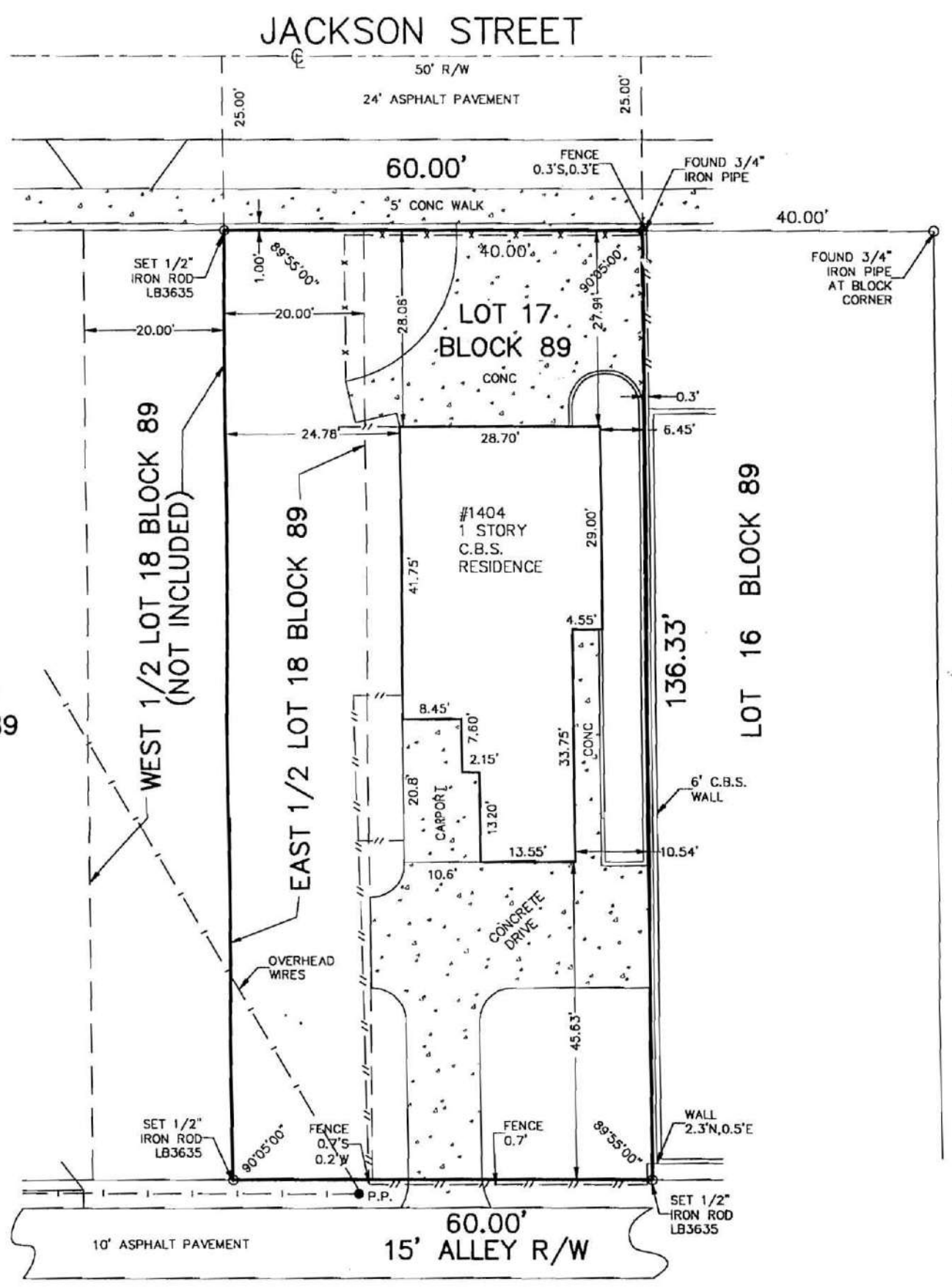

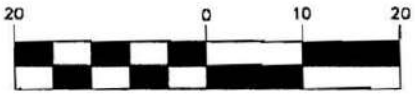

GRAPHIC SCALE
1"=20'

ES:

ILESS OTHERWISE NOTED FIELD MEASUREMENTS ARE IN AGREEMENT WITH RECORD
'ASUREMENTS.

ARINGS SHOWN HEREON ARE BASED ON A BEARING OF N/A ALONG
E _____ PLAT BOOK _____, PAGE _____
_____ COUNTY RECORDS.

E LANDS SHOWN HEREON WERE NOT ABSTRACTED FOR OWNERSHIP, RIGHTS-OF-WAY,
SEMENTS, OR OTHER MATTERS OF RECORDS BY ACCURATE LAND SURVEYORS, INC.

IIS SURVEY IS FOR TITLE AND MORTGAGE PURPOSES ONLY.

REVISIONS	DATE	BY

CERTIFICATION:

THIS IS TO CERTIFY THAT I HAVE RECENTLY SURVEYED THE PROPERTY DESCRIBED IN THE FOREGOING TITLE CAPTION AND HAVE SET OR FOUND MONUMENTS AS INDICATED ON THIS SKETCH AND THAT SAID ABOVE GROUND SURVEY AND SKETCH ARE ACCURATE AND CORRECT TO THE BEST OF MY KNOWLEDGE AND BELIEF. I FURTHER CERTIFY THAT THIS SURVEY MEETS MINIMUM TECHNICAL STANDARDS UNDER RULE 61G17-6 FLORIDA ADMINISTRATIVE CODE, ADOPTED BY THE FLORIDA BOARD OF LAND SURVEYORS, MAY 1995.

Robert L Thom 7-13-01

ROBERT L. THOMPSON (PRESIDENT)
PROFESSIONAL SURVEYOR AND MAPPER No.3869 - STATE OF FLORIDA

SEAL
NOT VALID WITHOUT THE SIGNATURE AND THE ORIGINAL RAISED SEAL OF A FLORIDA LICENSED SURVEYOR AND MAPPER.

TE OF SURVEY	DRAWN BY	CHECKED BY	FIELD BOOK
6/5/01 & 7/9/01	Q.D.I.	J.P.H.	755/1-2 & 755/75-76

SCALE 1"=20'

SKETCH NUMBER SU-01-4278C

1150 E. ATLANTIC BLVD.
POMPANO BEACH
FLORIDA 33060

ACCURATE LAND SURVEYORS, INC.
L.B. #3635

TEL. (954) 782-1441
FAX. (954) 782-1442

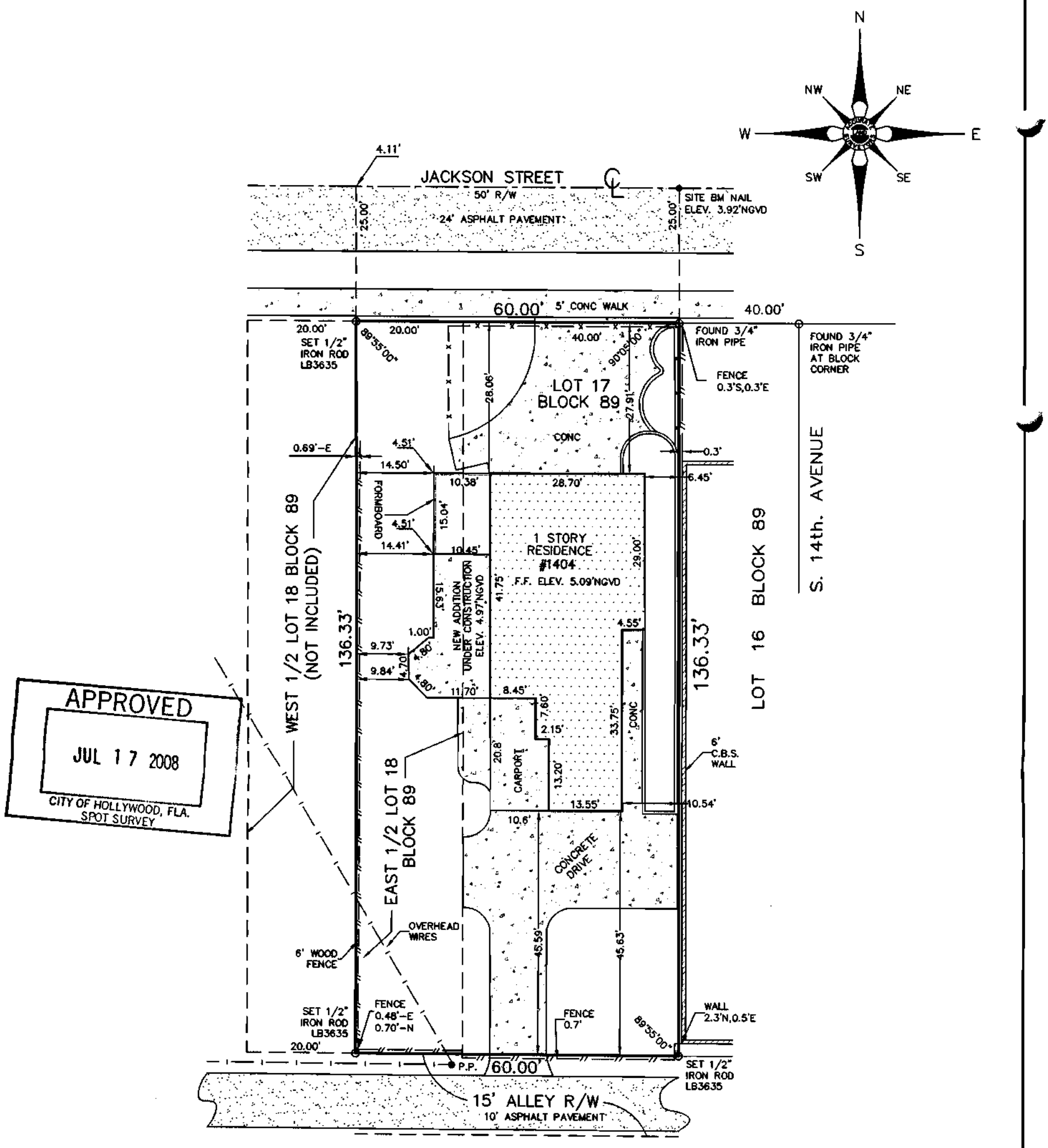

APPROVED
JUL 17 2008
CITY OF HOLLYWOOD, FLA.
SPOT SURVEY

6.69'
ELEVATIONS BASED ON N.G.V.D.

20 0 10 20
GRAPHIC SCALE
1"=20'

NOTES:

1. UNLESS OTHERWISE NOTED FIELD MEASUREMENTS ARE IN AGREEMENT WITH RECORD MEASUREMENTS.
2. BEARINGS SHOWN HEREON ARE BASED ON A BEARING OF N/A
3. THE LANDS SHOWN HEREON WERE NOT ABSTRACTED FOR OWNERSHIP, RIGHTS-OF-WAY, EASEMENTS, OR OTHER MATTERS OF RECORDS BY ACCURATE LAND SURVEYORS, INC.
4. OWNERSHIP OF FENCES AND WALLS IF ANY NOT DETEMINED.
5. THIS DRAWING IS THE PROPERTY OF ACCURATE LAND SURVEYORS, INC. AND SHALL NOT BE USED OR REPRODUCTED IN WHOLE OR IN PART WITHOUT WRITTEN AUTHORIZATION.
6. THIS SURVEY CONSISTS OF A MAP AND TEXT REPORT. ONE IS NOT VALID WITHOUT THE OTHER.
7. THIS SURVEY IS MADE FOR THE EXCLUSIVE USE OF THE CERTIFIED HEREON, TO BE VALID ONE YEAR FROM THE DATE OF SURVEY AS SHOWN.

CERTIFICATION:

THIS IS TO CERTIFY THAT I HAVE RECENTLY SURVEYED THE PROPERTY DESCRIBED IN THE FOREGOING TITLE CAPTION AND HAVE SET OR FOUND MONUMENTS AS INDICATED ON THIS SKETCH AND THAT SAID ABOVE GROUND SURVEY AND SKETCH ARE ACCURATE AND CORRECT TO THE BEST OF MY KNOWLEDGE AND BELIEF. I FURTHER CERTIFY THAT THIS SURVEY MEETS MINIMUM TECHNICAL STANDARDS UNDER RULE 61G17-6 FLORIDA ADMINISTRATIVE CODE, ADOPTED BY THE FLORIDA BOARD OF LAND SURVEYORS, MAY 1995.

SEAL
NOT VALID WITHOUT THE SIGNATURE AND THE ORIGINAL RAISED SEAL OF A FLORIDA LICENSED SURVEYOR AND MAPPER.

Robert L. Thompson 7-17-8
ROBERT L. THOMPSON (PRESIDENT)
PROFESSIONAL SURVEYOR AND MAPPER No.3869 - STATE OF FLORIDA

REVISIONS	DATE	BY
SPOT SURVEY SU-08-1787	07-10-08	AL/JMS

DATE OF SURVEY	DRAWN BY	CHECKED BY	FIELD BOOK	SCALE	SKETCH NUMBER
6-5-01 & 7/9/01	Q.D.I.	J.P.H.	756/1-2 & 755/75-76	1"=20'	SU-01-4278C

THESE DOCUMENTS HAVE BEEN PREPARED ACCORDING TO THE FOLLOWING REQUIREMENTS-
FLORIDA BUILDING CODE 2004 & LATEST EDITION of AMENDMENTS, ASCE 7
140 MPH
CATEGORY 'C'

OCCUPANCY - RESIDENTIAL R-3
TYPE II-B ALTERATION - LEVEL 2

GENERAL NOTES-

- CONTRACTOR AND SUB CONTRACTORS SHALL VISIT SITE AND VERIFY ALL CONDITIONS BEFORE PROCEEDING WITH ANY COMMENCEMENT OF WORK OR ANY MATERIAL ORDERING. NOTIFY THIS ARCHITECT AND ENGINEERS OF ANY ERRORS, OMISSIONS OR CHANGES BEFORE COMMENCEMENT OF PROJECT.
- MANUFACTURER FOR TRUSSES, STRUCTURAL STEEL FABRICATION SHALL SUBMIT TO THIS ARCHITECT SHOP DRAWINGS FOR APPROVAL BEFORE FABRICATION AND SUBMISSION TO THE BUILDING DEPARTMENT.
- AIR CONDITIONING SUBCONTRACTOR SHALL SUBMIT SHOP DRAWINGS TO THIS ARCHITECT WITH ALL NAME PLATE CRITERIA, ELECTRICAL REQUIREMENTS EFFICIENCY RATING, ETC. BEFORE ANY MATERIAL ORDERING AND SUBMITTALS TO THE BUILDING DEPT. REFER TO ENERGY COMPLIANCE FORMS FOR MINIMUM REQUIREMENTS.
- CONTRACTOR SHALL NOTIFY ALL APPROPRIATE UTILITY COMPANIES BEFORE ANY EXCAVATION HAS COMMENCED AND TO VERIFY EXISTING SERVICE LINES AND POSSIBLE HAZARDS.
- COORDINATE ELECTRICAL SERVICE, TELEPHONE, TELEVISION (CABLE), COMPUTER SYSTEM REQUIREMENTS AND LOCATIONS AND AVAILABILITY WITH SERVICE PROVIDERS.
- BATHROOM, RESTROOM FLOORS, BASE TUB AND SHOWER ENCLOSURES SHALL BE IMPERVIOUS MATERIAL (CERAMIC TILE) UNLESS SPECIFIED OTHERWISE. PROVIDE WATER RESISTANT GYPSUM WALLBOARD (DENS SHIELD) AROUND TUB AND SHOWER ENCLOSURES.
- INTERIOR PARTITIONS (NON-BEARING) SHALL BE 1/2" GYPSUM WALLBOARD ON EACH SIDE OF 2"x 4" WOOD STUDS or 25 ga METAL 'C' SHAPED STUDS SPACED 24" ON CENTER, UNLESS OTHERWISE SPECIFIED.
- ALL WOOD IN CONTACT WITH CONCRETE SHALL BE TREATED OR OTHERWISE PROTECTED WITH TYPE 30 FELT MEMBRANE BARRIER.

WOOD NOTES-

- WOOD GRADE FOR STUDS AND TOP PLATES SHALL BE SOUTHERN PINE - STANDARD GRADE. BASE PLATES SHALL BE No. 2 SOUTHERN PINE TREATED SURFACE DRY USED AT MAX. 19% MOISTURE CONTENT.
- STRUCTURAL GRADE LUMBER SHALL BE MIN. Fb = 1200 PSI UNLESS OTHERWISE SPECIFIED.
- NAILS FOR-
  STUD TO STUD PLATE - (2) 16d
  STUD TO SOLE PLATE / TOE NAIL- (2) 8d
  DOUBLE TOP PLATE- (2) 16d NAIL @ 12"o.c.
- TOP PLATES IN BEARING WALLS SHALL BE DOUBLED AND LAPPED AT INTERSECTION OF WALLS AND PARTITIONS.
  JOINTS SHALL BE LAPPED NOT LESS THAN (4) FEET
- CORNER OF STUD WALLS SHALL BE FRAMED SOLID BY NOT LESS THAN (3) STUDS WITH 16d NAILS @ 12" o.c. CORNER STUD SECURED TO (3) MEMBER STUDS (2) 16d NAILS @ 6"o.c.
- TOP PLATES IN NON-BEARING PARTITIONS SHALL BE SINGLE
- SOLE PLATES IN NON-BEARING PARTITIONS SECURE TO CONCRETE SLAB WITH TAPCON FASTENER 1/4"x 1-1/2" EMBED or HILTI POWDER ACTUATED FASTENER PIN DN 12 P08 x 2.145 SHANK DIa. SPACE FASTENERS AT 32"o.c.
- CEILING FURRING STRIPS SHALL BE SOUTHERN PINE 1"x 3" WOOD SECURED TO WOOD JOISTS, TRUSSES SPACED 16"o.c. WITH (2) 8d NAILS COMMON.
- WALL FURRING AND CONTINOUS FIRE STOP FOR CONCRETE, MASONRY WALLS SHALL BE 1"x 2" TREATED PINE SPACED 24"o.c. HORIZONTAL AND MAX. 8ft HIGH VERTICAL PROVIDE FORE STOP ABOVE 8ft.
  SECURE TO CONCRETE WITH CUT NAILS OR "T" NAILS SPACED @ 16"o.c.
- WHERE VERTICAL PIPES POSITIONS NECESSITATE THE CUTTING OF PLATES, A METAL TIE 1"x 1/8" SHALL BE PLACED EACH SIDE OF WOOD PLATE ACROSS THE OPENING 6" PAST AND NAILED WITH (2) 16d oa 8d COMMON NAILS AT EACH END.
- HEADERS OR LINTELS OVER STUD WALL OPENINGS SHALL BEAR NOT LESS THAN (3) 2x JACK STUDS or HANGER SECURED TO NOT LESS THAN (3) KING STUDS.
- WHERE STUD WALLS OR PARTITIONS JOIN MASONRY WALLS, SUCH STUDS SHALL BE SECURED AGAINST LATERAL MOVEMENT BY BOLTING TO THE MASONRY OR CONCRETE WITH 1/2 INCH DIAMETER ANCHOR BOLTS WITH OVERSIZED WASHER SPACED NOT MORE THAN 4 FEET APART AND EMBEDDED NOT LESS THAN 5 INCHES INTO A GROUTED CELL OR INTO CONCRETE.

GYPSUM WALLBOARD-

- WALLBOARD SHALL BE ASTM C36-85 REGULAR 1/2" / ASTM C36-85 TYPE 'X' FIRE RATED / ASTM C111 (MOISTURE RESISTANT) UNLESS SPECIFIED OTHERWISE.
- JOINT TREATMENT SHALL BE COMPOUND AND TAPE (READY MIX) ASTM C475-88 CORNER BEAD ASTM C1047-88
  PANEL ADHESIVE SHALL BE STA-STUCK 88-200, ASTM C-557-73
- PROVIDE MIN. 1/2" AIR GAP BETWEEN FLOOR AND WALLBOARD BOTTOM
- ATTACHMENTS FOR WALLBOARD TO SUPPORTS SHALL BE-
  METAL STUDS- TYPE W 1-1/4" DRYWALL SCREWS SPACED @ 12"o.c.
  WOOD STUDS & FURRING- NAILS GWB-54 ANNUAL RING 1/4" HEAD, .098 Dia SHANK
  ATTACHMENT SPACING / CEILING- 7" o.c. / WALLS- 8" o.c.

METAL STUD WALL - NON BEARING GALVALUME STEEL

SCREW STUD TRACK- .0179" BASE STEEL x 3-5/8" WIDE
STUDS- 'C' SHAPED SCREW STUDS, ASTM C645 x .0179" BASE STEEL
SCREWS- TYPE S-12 LOW PROFILE (2) SCREWS PER ATTACHMENT (METAL to METAL)
HILTI SHOT THROUGH BASE TRACK TO CONCRETE- PIN DN 19 P08 x .145" Dia. SHANK
CEILING METAL TRACK TO WOOD FURRING- TYPE -W SCREW x 1-1/4" SPACED @ 24"o.c.
METAL FURRING- ASTM C645 / 1/8" x .179" BASE STEEL
WIRE LATH-
- SOFFIT- 3/8" RIB LATH, OVERLAP EDGES ONE (1") ATTACHMENTS FOR SECURING LATH TO SUPPORTS SHALL BE SPACED NOT MORE THAN 6" APART AND SIDE LAPS SHALL BE SECURED TO SUPPORTS AND TIED BETWEEN SUPPORTS AT NOT TO EXCEED 9" INTERVALS. ATTACHMENTS TO CEILING SUPPORTS SHALL BE No. 11 ga x 1" LONG WITH 3/4" Dia. HEAD.
  PROVIDE TYPE 30 ROOF FELT BETWEEN ALL WOOD AND LATH

- STUCCO

- ASTM C926 / (1) PART PORTLAND CEMENT TO A MAX. 2-1/2 PARTS SAND BY VOLUME (MIXED PROPORTION)
- MASONRY APPLICATION- BASE COAT / FINISH COAT
- RIB LATH- (3) COAT APPLICATION / Min. 1/2" THICKNESS
- PLASTIC PC COMPONENTS- PVC ACCESSORIES & PLASTIC LATH

- INSULATION

FIBERGLASS BATT - ATTIC R-30
SINGLE ASSEMBLY R-19
PARTITIONS 4", R-11 / 6" R-19
EXTERIOR WALLS- FRAME 6", R-19
MASONRY R 4.1 MINIMUM
R 5.4 CELOTEX INSULATING SHEATHING 3/4"
CONCRETE SLAB FLOOR R-0
FRAME FLOOR R-19

ROOF NOTE

BUILT-UP ROOF

MINERAL SURFACED CAP SHEET (WHITE FLINTLASTIC MODIFIED BITUMEN - HOT MOPPED 12ga x 1-1/4" CORROSION RESISTANT ON TYPE 30, ASTM D226, TYPE II ORGANIC FELT APPLIED TO THE DECK IN SHINGLE FASHION. THE UNDERLAYMENT SHALL BE SECURED TO THE DECK WITH MINIMUM 12 ga x 1-1/4" CORROSION RESTANT ROOFING NAILS AND A MINIMUM 32 ga 1-1/8" Dia. TIN CAPS SPACED FOR 'PERIMETER' ROOF EDGE (4 ft) 6" LAPS, 2 ROWS @ 6" MIDSHEET AND 'FIELD' 6" @ LAPS, 2 ROWS @ 12" MIDSHEET.
EDGE METAL SHALL BE .021" (26ga), 2-1/2"x 2-1/2" GALVANIZED AND NAILED OVER THE TOP OF THE UNDERLAYMENT AT 4" ON CENTER WITH MIN. 12ga x 1-1/4" CORROSION RESISTANT ROOFING NAILS AT ALL PERIMETERS, AT CORNERS, THE ENDS OF ADJOINING EDGE METAL SHALL BE OVERLAPPED FOR (5") NOTCHED AND BENT AROUND CORNERS METAL EDGE SHALL BE OVERLAPPED NOT LESS THAN (3").

ROOF SHEATHING- 19/32" CD PLYWOOD - SPAN RATING 40/20
FASTENERS- NAILS (8d) COMMON, SPACED @ (6") ON CENTER OVER ALL SUPPORTS AND BLOCKING UNLESS SPECIFIED OTHERWISE
ROOF SHEATHING NAILED AT (4") ON CENTER AT PERMITER EDGE AND FIELD
PERIMETER EDGE DISTANCE (4 FEET)
ROOF SHEATHING SPACING BETWEEN PANELS AS PER MANUFACTURER REQUIREMENTS. (1/8")
SUPPORTS- MINIMUM (3) TRUSS, JOISTS

ATTIC VENTILATION- 1/ 150 RATIO
1/300 RATIO WITH ROOF VENTILATORS 3ft ABOVE EAVE

FOUNDATION STATEMENT

- FOUNDATIONS ARE DESIGNED FOR MINIMUM 2,000 PSF BEARING CAPACITY
- COMPACTED SOILS SHALL BE TESTED TO A MINIMUM OF 95% OF MODIFIED PROCTOR IN ACCORDANCE WITH ASTM D 1557 AND COMPACTED AND TESTED IN LIFTS NOT TO EXCEED 12 INCHES.
- A SOIL ENGINEERING TESTING LAB SHALL PROVIDE A REPORT OF EXISTING SOIL CONDITIONS & MAKE RECOMMENDATIONS FOR FOUNDATION REQUIREMENTS FOR THE INTENDED PROJECT.

NOTICE OF TERMITE PROTECTION

A PERMANENT SIGN, WHICH INDENTIFIES THE TERMITE TREATMENT PROVIDER AND NEED FOR RE-INSPECTION AND TREATMENT CONTRACT RENEWAL, SHALL BE PROVIDED. THE SIGN SHALL BE POSTED NEAR THE WATER HEATER OR ELCTIC PANEL.

- TERMITE PROTECTION- SOILS UNDER BUILDING SLABS AND FOUNDATIONS SHALL BE TREATED BY REGISTERED TERMITICIDES.
  UPON COMPLETION OF THE APPLICATION OF THE TERMITE PROTECTIVE TREATMENT, A 'CERTIFICATE OF COMPLIANCE' SHALL BE ISSUED TO THE BUILDING DEPT. BY THE LICENSED PEST CONTROL COMPANY THAT CONTAINS THE FOLLOWING STETEMENT.
  " THE BUILDING HAS RECEIVED A COMPLETE TREATMENT FOR THE PREVENTION OF SUBTERRANEAN TERMITES. TREATMENT IS IN ACCORDANCE WITH THE RULES AND LAWS ESTABLISHED BY THE FLORIDA DEPT. OF AGRICULTURE AND COMMUNITY SERVICES'.

REINFORCEMENT NOTES

- ALL REINFORCING STEEL SHALL BE NEW BILLET CONFORMING TO ASTM A615, GRADE 60
- ALL STRUCTURAL ANGLES SHALL BE GRADE 36, Fy AND FINISHED WITH ONE COAT RUST PROHIBITIVE PAINT.
- UNLESS OTHERWISE NOTED ALL DETAILING, FABRICATION AND PLACING OF REINFORCING STEEL SHALL CONFORM TO THE MANUAL OF STANDARD PRACTICE FOR DETAILING REINFORCED CONCRETE STRUCTURES.
- SPLICES IN REINFORCING BARS SHALL NOT BE LESS THAN 36 BAR DIAMETERS AND REINFORCING SHALL BE CONTINOUS AROUND CORNERS AND CHANGES IN DIRECTION. CONTINUITY SHALL BE PROVIDED AT CORNERS OR CHANGES IN DIRECTION BY BENDING THE LONGITUDINAL STEEL AROUND THE CORNER 48 BAR DIAMETERS OR BY ADDING MATCHING MATCHING REINFORCING STEEL, WHICH SHALL EXTEND 48 BAR DIAMETERS FROM EACH CORNER OR CHANGE IN DIRECTION. MINIMUM BAR LAP SPLICES IS 30 INCHES. WHEN (3) OR MORE BARS ARE REQUIRED, THE BARS SHALL BE HELD IN PLACE AND ALIGNMENT BY TRANVERSE BARS SPACED NOT MORE THAN FOUR (4) FEET APART.
- WIRE MESH REINFORCING SHALL LAP ONE FULL MESH PLUS (2") AND BE SECURELY WIRED AT EACH SIDE AND END.
- MINIMUM COVER FOR REINFORCING STEEL UNLESS OTHERWISE NOTED SHALL BE-
  - CONCRETE DEPOSITED AGAINST THE GROUND----------3"
  - WALLS EXPOSED TO THE WEATHER OR IN CONTACT WITH THE GROUND----2"
  - WALLS NOT EXPOSED TO THE WEATHER OR IN CONTACT WITH THE GROUND----------3/4"
  - BEAMS / OVER MAIN REINFORCEMENT----------2"
  - SLABS ON GRADE----------@ CENTERLINE
  - COLUMNS----------2"
  - STRUCTURAL SLABS----------3/4"

ELECTRIC NOTES

- ALL ELECTRIC WORK SHALL BE IN ACCORDANCE WITH THE NATIONAL ELECTRIC CODE.
- MOUNT ALL SWITCHES 42" A.F.F. AND ALL RECEPTACLES 18" A.F.F.
  MOUNT WALL HUNG FIXTURES NOT LOWER THAN 80" A.F.F. TO BOTTOM OF FIXTURE.
- OWNER / CONTRACTOR SHALL SELECT LIGHT FIXTURES TYPE AND SUBMIT TO ARCHITECT FOR APPROVAL FOR LOCATION USAGE.
- ALL EXTERIOR RECEPTACLES (WEATHER PROOF) FOR GENERAL PURPOSE AND BATHROOM / RESTROOM SHALL HAVE GROUND FAULT CIRCUIT INTERRUPTER.
- SMOKE DETECTORS SHALL BE 110 Volt WITH BATTERY BACK UP TYPE, INTERCONNECTED HARDWIRED TO NON SWITCHABLE INDIVIDUAL CIRCUIT. LOCATE ON OR NEAR CEILING IN THE IMMEDIATE VICINITY OUTSIDE AND INSIDE BEDROOMS AT DOORWAY AND AT STAIRWAY LANDINGS. LOCATE NO CLOSER THAN 3 Feet TO A/C DIFFUSER GRILL.
- THE ELECTRICAL CONTRACTOR SHALL NOTIFY ARCHITECT OF ANY CHANGES TO EQUIPMENT LOADS DIFFERENT THAN SCHEDULE PANEL LOADS.
- GROUNDING ELECTRODES SHALL BE COPPER THW IN ON CONTINOUS LENGTH OR SPLICES IN BUSBARS SHALL BE PERMITTED AND SHALL BE ENCLOSED IN CONDUIT ENCLOSURE SECURELY FASTENED TO THE SURFACE ON WHICH IT IS CARRIED TO EXPOSED CONNECTIONS FOR GROUNDING. METHODS FOR SECURING GROUND SHALL BE PERMANENT. PROVIDE GROUNDING ELECTRODES FROM ALL SERVICE EQUIPMENT OR SEPERATELY DERIVED SYSTEM TO WATER PIPE OR STRUCTURAL METAL BUILDING MEMBER AND FROM THAT POINT TO ONE OF THE ELECTRODES SHOWN FOR GROUNDING.
- BONDING SHALL BE PROVIDED WHERE NECESSARY TO ASSURE ELECTRICAL CONTINUITY AND THE CAPACITY TO CONDUCT SAFELY ANY FAULT CURRENT LIKELY TO BE IMPOSED. ALL NON-CURRENT CARRYING METAL PARTS OF SERVICE EQUIPMENT SHALL BE EFFECTIVELY BONDED TOGETHER.
  AN ACCESSIBLE MEANS EXTERNAL TO ENCLOSURES FOR CONNECTING INTER-SYSTEM BONDING AND GROUNDING CONDUCTORS SHALL BE PROVIDED AT THE SERVICE BY EITHER EXPOSED METALLIC SERVICE RACEWAYS, EXPOSED GROUNDING ELECTRODES CONDUCTOR OR APPROVED MEANS FOR THE EXTERNAL CONNECTION OF A BONDING, OR GROUNDING CONDUCTOR TO THE SERVICE RACEWAY OR EQUIPMENT.
  METHODS OF BONDING SHALL BE BY SCREWS, CLIPS, THREADED COUPLING AND CONNECTORS, BONDING JUMPERS OR OTHER DEVICES SUCH AS BONDING TYPE LOCKNUTS AND BUSHINGS.
- TESTING- ALL WIRING SHALL BE FREE FROM SHORT CIRCUITS AND GROUNDS AND SHALL BE TESTED FOR THESE DEFECTS PRIOR TO BEING CONNECTED TO THE CIRCUITS.
- GROUNDING CONDUCTOR MATERIAL TYPE AND SIZE AS PER PANEL SCHEDULE AND RISER. PROTECTION OF CONDUCTORS SHALL BE BY CONDUIT, BOXES AND COVERS STUD PLATES AND SLEEVES, RACEWAY ETC.TO INSURE ADEQUATE PROTECTION OF CONDUCTORS AGAINST DAMAGE.
- SEPARATE GROUNDING SYSTEM SHALL BE INSTALLED AND PROPERLY BONDED AS PER CODE AND USAGE REQUIREMENTS.
- ROMEX TYPE WIRING (12 CONDUCTOR WITH GROUND) COPPER MAY BE USED FOR LOCATIONS IN PLACE OF CONDUIT, (UNLESS OTHERWISE SPECIFIED)
- DWELLING UNIT BEDROOMS- ALL BRACH CIRCUITS THAT SUPPLY 125 Volt SINGLE PHASE 15 & 20 AMP OUTLETS INSTALLED IN DWELLING UNIT BEDROOMS SHALL BE PROTECTED BY AN ' ARC-FAULT CIRCUIT INTERRUPTER) BREAKERS. N.E.C. Art 210-12

ELECTRIC LEGEND

⊖	RECEPTACLE	110 Volt SINGLE
⊖⊖		DUPLEX
⊖⊖⊖		FOUR PLEX
⊖	RECEPTACLE	240 Volt SINGLE
	AFCI	ARC FAULT CIRCUIT INTERRUPTER
	GFCI	GROUND FAULT CIRCUIT INTERRUPTER
	WP	WEATHER PROOF
□	JUNCTION BOX	
□	JUNCTION BOX	FUSED
⊹	LIGHT FIXTURE	WALL MOUNT (wm)
		CEILING MOUNT (cm)
		RECESSED SPOT HIGH HAT (hh)
		RECESSED SPOT HIGH HAT LOW VOLTAGE (lv)
$	SWITCH	SINGLE
$3		THREE WAY
$d		DIMMER (d)
	ELECTRICAL PANEL	
M	ELECTRICAL METER / DISCONNECT	
EF	EXHAUST FAN - CEILING	
CF	CEILING PADDLE FAN, FAN BOX (Fan & Light) SWITCHED	
SD	SMOKE DETECTOR- DETECTORS SHALL BE INTER-CONNECTED AND ON KITCHEN or BATHROOM LIGHT CIRCUIT, NON-SWITCHABLE	
TV	TELEVISION CABLE	WALL
T	TELEPHONE	WALL
C	COMPUTER	WALL
	HOME RUN	
C-1	CIRCUIT NUMBER	

ELECTRICIAN SHALL PROVIDE FOR THE FOLLOWING ADDITION CIRCUITS IN EXISTING ELECTRIC PANEL SPACE
CIRCUIT # 1,3 AIR CONDITIONING- WALL UNIT
CIRCUIT # 2-4 GENERAL LIGHTING - 1P-15A CB, 3 # 14 In 1/2"P-20A CB, 3 # 12 In 1/2"C
RECEPTACLE GFCI- 1P-20A CB, 3 # 12 In 1/2"C

ADDITIONAL LOAD DEMAND- 315 sf x 3w/ sf = 945 watts- GENERAL LIGHTING
1800 watts- A/C
TOTAL = 2,745 watts = 11 AMPS

EXISTING LANDSCAPING to REMAIN
RP 5/12/08

LANDSCAPE LIST: 1404 JACKSON ST., Hollywood, Fl.

SYMBOL	TYPE	COMMON / BOTANICAL NAME	EXISTING or NEW
RP	PALM	ROYAL PALM / ROYSTONEA PALMACEAE	- EXISTING
QS	PALM	QUEEN SAGO / CYCAS CIRCINALIS-	EXISTING
JR	TREE	JACARANDA / JACARANDA MIMOSAEFOLIA-	EXISTING
CP	SHRUB	COCOPLUM / CHRYSOBALANUS ICACO-	EXISTING
DH	**TREE**	**DAHOON HOLLY / ILEX AQUIFOLIACEAE-**	**NEW**

TRESS SHALL NE FLORIDA GRADE No. 1
MINIMUM 12 feet HIGH AT TIME OF PLANTING
IRRUGATION WITH 100% COVERAGE WITH A RAIN GAUGE

NOTE: NO EXISTING AIR CONDITIONING AIR CONDENSING UNITS ON SITE

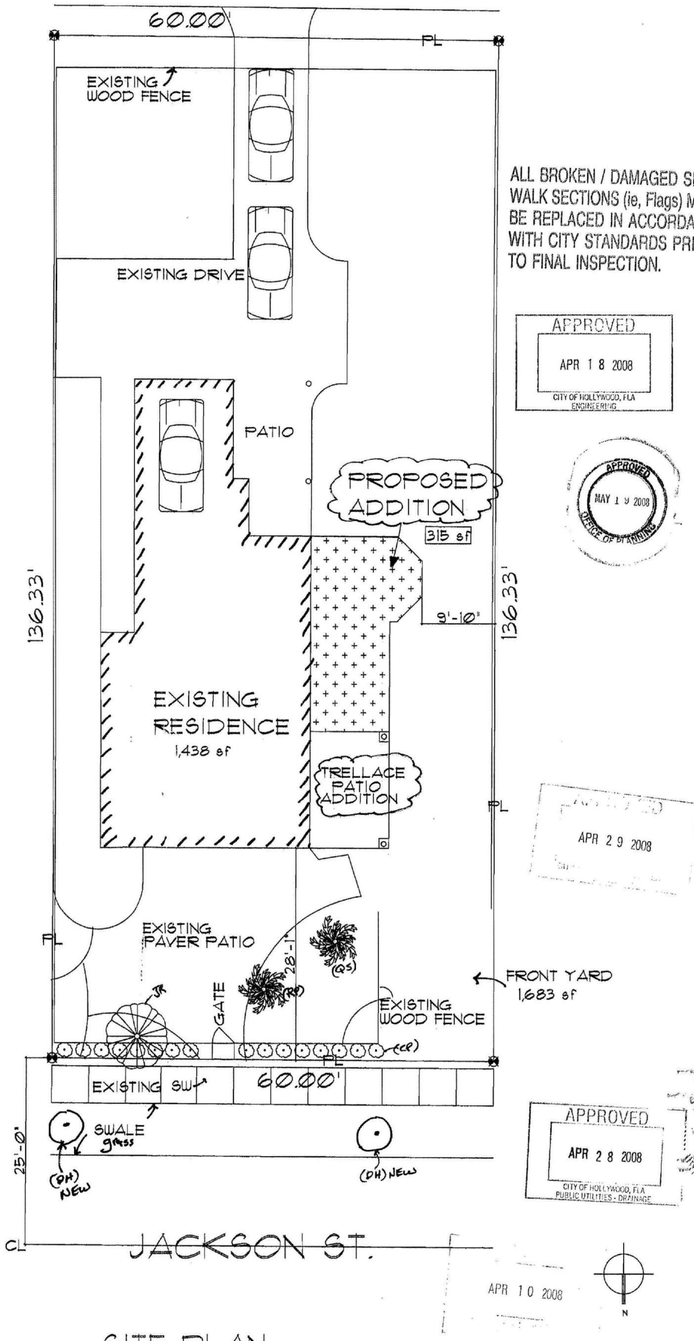

ALL BROKEN / DAMAGED SIDE WALK SECTIONS (ie, Flags) MUST BE REPLACED IN ACCORDANCE WITH CITY STANDARDS PRIOR TO FINAL INSPECTION.

APPROVED
APR 18 2008
CITY OF HOLLYWOOD, FLA
ENGINEERING

APPROVED
MAY 19 2008
DEPARTMENT OF PLANNING

APPROVED
APR 29 2008

APPROVED
APR 28 2008
CITY OF HOLLYWOOD, FLA
PUBLIC UTILITIES - DRAINAGE

APR 10 2008

SITE PLAN

DESCRIPTION-
LOT 17 and EAST 1/2 of LOT 18, BLK. 89 of 'HOLLYWOOD,
ACCORDING TO THE PLAT THEREOF AS RECORDED IN PB. 1 , PG. 21
OF THE PUBLIC RECORDS OF BROWARD COUNTY, FLORIDA
FOLIO # - 5142 15 02 6660

EXISTING RESIDENCE 1,438 sf
PROPOSED ADDITION 315 sf = 22%
TOTAL = 1,753 sf

PARKING REQUIRED = 2
PARKING PROVIDED = 3

Date 1-14-08
Rev 3.24.08

PROPOSED ADDITION to RESIDENCE
1404 JACKSON STREET
HOLLYWOOD, FLORIDA

Date 3/7/08
ROBERT G. ISHMAN

ROBERT G. ISHMAN P.A.
ARCHITECT
LICENSE AR 12684
2171 HOLLYWOOD BLVD.
HOLLYWOOD, FLORIDA 33020
Tel (954) 925-9695

PROJECT No. 2709

SC 1" = 10 Ft

SHEET
SP-1
of 1

○ SCHEDULE / WINDOW

MARK	TYPE	FRAME	GLAZING	SILL	BUCK OPENING	REMARKS	WIND PRESSURE pos P.S.F neg	IMPACT RESISTANT	PRODUCT APPROVAL
1	24 SH SINGLE HUNG	ALUMINUM	TINTED	MARBLE	37-3/4"x 80-5/8"		+38.65 −41.90		
2	4) 24 SH SINGLE HUNG	ALUMINUM	TINTED	MARBLE	151-3/8"x 80-5/8"				

ALL WINDOW FRAMES, SASHES SHALL BE EXTRUDED ALUMINUM 6063-T5 ALLOY
PROVIDE APPROVED TYPE STORM PANEL PROTECTION FOR ALL WINDOWS (NEW)
WIND PRESSURES ARE APPLICABLE FOR STORM PANEL REQUIREMENTS

VERIFY ALL BUCK OPENING REQUIREMENTS WITH PRODUCT APPROVAL AND MANUFACTURER, MODIFY ACCORDINGLY

ROOM FINISH SCHEDULE

AREA	FLOOR	BASE	WALLS	CEILING	CEILING HEIGHT	REMARKS
SUN ROOM	TILE	WOOD	PAINT ^	(KD) PAINT ^	8'-0"	
DEN	TILE	WOOD	PAINT ^	(KD) PAINT ^	8'-0"	

NOTES-
ALL DOORS SHALL BE PAINTED WITH SEMI-GLOSS ENAMEL
LATEX ENAMEL PAINT
EGG SHELL LATEX PAINT
^ LATEX PAINT

(KD) CEILING - KNOCK DOWN LIGHT TEXTURE

EXISTING HOUSE COLOR- WHITE

⬡ SCHEDULE / DOOR

MARK	SIZE	TYPE	DOOR MATERIAL	FRAME	THRESHOLD	BUCK OPENING	REMARKS	WIND PRESSURE pos P.S.F neg	IMPACT RESISTANT	PRODUCT APPROVAL
A	3'0"x 6'8"	FRENCH	METAL IMPACT GLAZING	METAL	ALUMINUM	42"x 82"		+37.31 −40.57	YES	
B	6'-0"x 6'-8"	DOUBLE FRENCH	METAL TEMPERED GLAZING	METAL	NONE	INTERIOR				

NOTE-
UNLESS OTHERWISE INDICATED ALL DOORS AND FRAMES SHALL BE PAINT GRADE AND FINISHED WITH APPROPRIATE TYPE PAINT
FOR INTERIOR AND EXTERIOR APPLICATION- ENAMEL PAINT
PAINT COLORS SHALL BE OWNER SELECTED
DOOR HARDWARE SHALL BE OWNER SELECTED

VERIFY ALL BUCK OPENING REQUIREMENTS WITH PRODUCT APPROVAL AND MANUFACTURER, MODIFY ACCORDINGLY

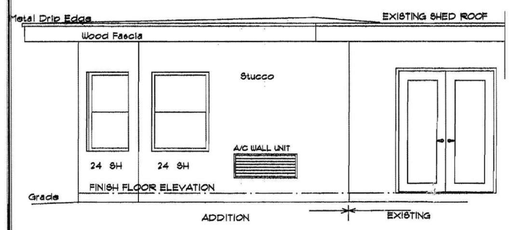

South Rear Elevation

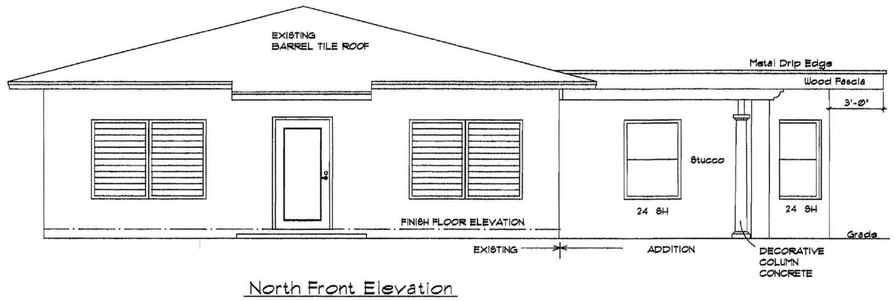

North Front Elevation

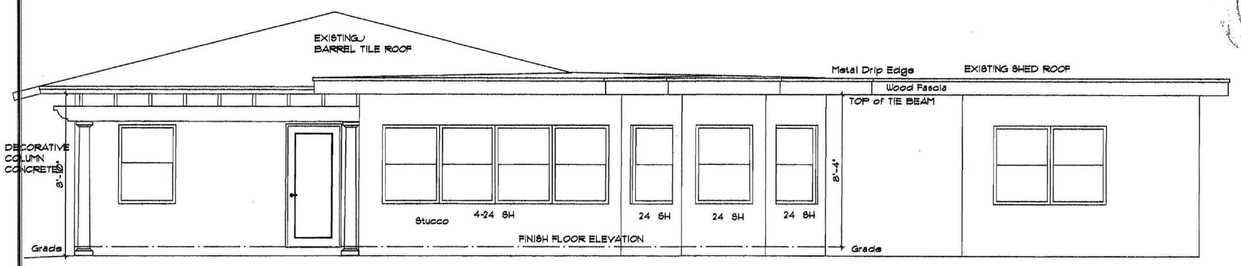

West Side Elevation

ELEVATIONS sc 1/4" = 1'- 0"

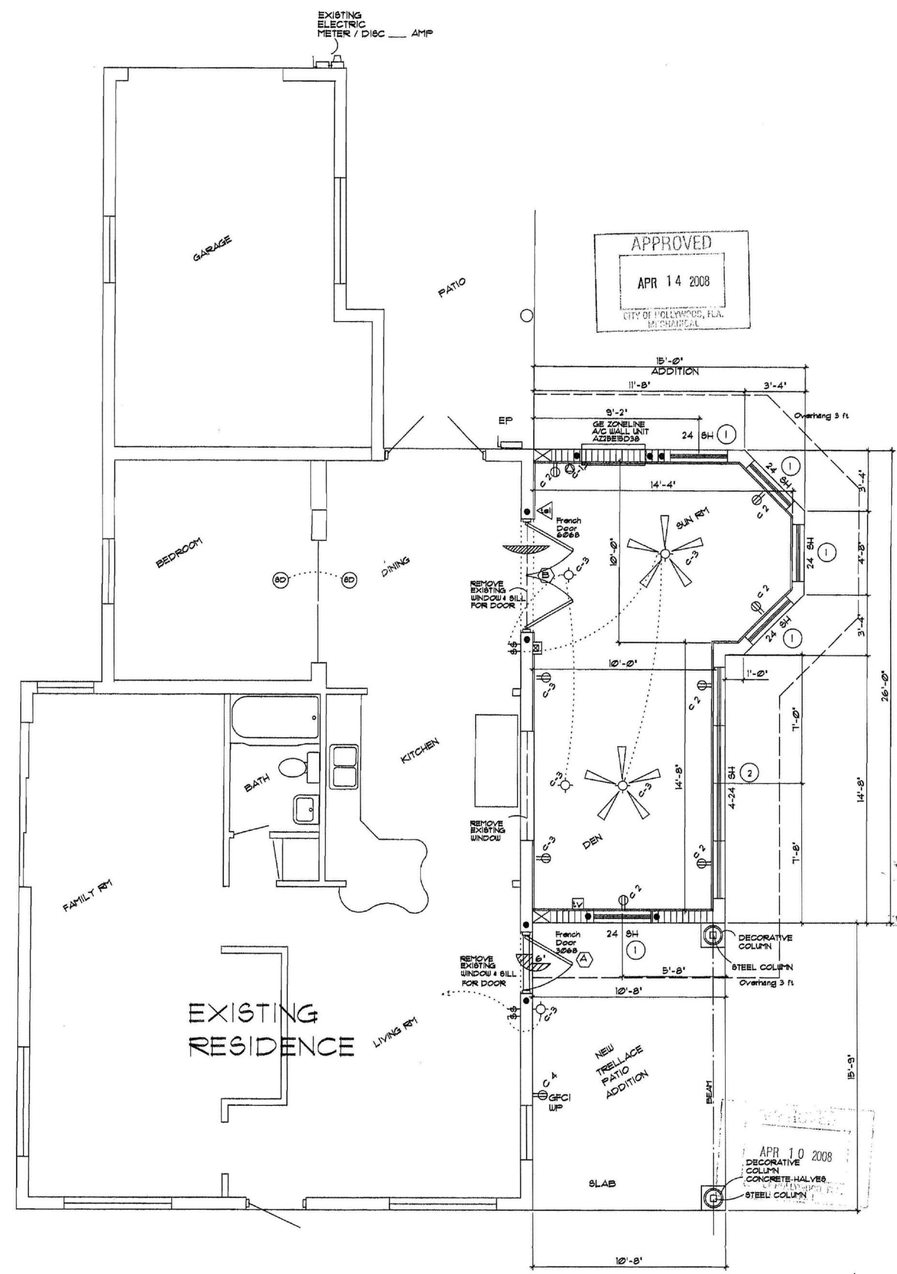

FLOOR PLAN sc 1/4" = 1'- 0"

APPROVED
APR 14 2008
CITY OF HOLLYWOOD, FLA.
BUILDING DIVISION

APPROVED
APR 29 2008
CITY OF HOLLYWOOD, FLA.
BUILDING DIVISION

APPROVED
MAY 19 2008
DEPT. OF PLANNING

APPROVED
APR 10 2008
CITY OF HOLLYWOOD, FLA.
BUILDING DIVISION

APPROVED
APR 28 2008
CITY OF HOLLYWOOD, FLA.
BUILDING DIVISION

Date 1-14-08
Rev

SCANNED
NOV - 7 2008
BUILDING DIV.

PROPOSED ADDITION to RESIDENCE
1404 JACKSON STREET
HOLLYWOOD, FLORIDA

Date 4-10-08

ROBERT G. ISHMAN

ROBERT G. ISHMAN P.A.
ARCHITECT
LICENSE AR 12684
2171 HOLLYWOOD BLVD
HOLLYWOOD, FLORIDA 33020
Tel (954) 925-9595

PROJECT No. 2709

SHEET
A-1
of 3

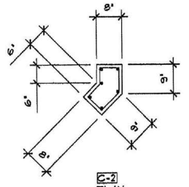

C-2
PLAN

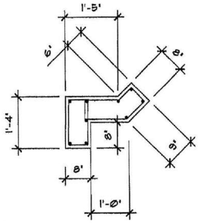

C-3
PLAN

CONCRETE SLAB

Min. 4"th w/ 6"x 6" #Ø-1Ø WWF. MIDWAY on
6mil VISQUEEN VAPOR BARRIER on
TERMITE TREATED COMPACTED SOIL

FOUNDATION SCHEDULE CONCRETE

F-1 12' X 16' w/ 2 # 5 @ BOTTOM

F-2 12' x 24' w/ 3 # 5 @ BOTTOM & # 5 TRANVERSE @ 24' o.c.
& # 5 x 5Ft TRANVERSE w/ ACI HOOK @ 12'o.c. (TR)

F-3 36"x 36"x 16' EACH WAY @ BOTTOM
w/ 4 # 5 @ 6' o.c. TOP EACH WAY

COLUMN SCHEDULE

DESCRIPTION	SIZE	REINFORCING
C-1	8' x 16'	4 # 5 # 3 □'s @ 8' o.c.
C-2	VARIES SEE PLAN	6 # 5 # 3 □'s @ 8' o.c.
C-3	VARIES SEE PLAN	9 # 5 # 3 □'s @ 8' o.c.
Tc-1		# 5 VERT. in GROUTED CELL

BEAM SCHEDULE

RB-1	8' x 12'	2 # 5 TOP, 2 # 5 BOTTOM # 3 □'s (4) @ 12' o.c.
RB-2	8' x 16'	2 # 6 TOP, 2 # 6 BOTTOM # 3 □'s (6) @ 4' o.c. EE, Rem @ 12' o.c.

STEEL COLUMN ST-1
4"x 4" x 14.32 lbs/ft
BASE PLATE
5/8" x 10"x 10" w/ (4) 3/4" x 10" "J" BOLTS
ECCENTRIC PLATE
TOP PLATE
4" x 8"x 1/2"th
CONT. WELD PLATES TO COLUMN

STEEL COLUMN ST-2
3"x 3" x 6.86 lbs/ft
BASE PLATE
5/8" x 10"x 10" w/ (4) 3/4" x 10" "J" BOLTS
TOP PLATE
3-1/2" x 4"x 9"h x 1/2"th w/
(2) 5/8" THRU BOLTS TO WOOD BEAM
CONT. WELD PLATES TO COLUMN

STEEL BEAM - W 12 x 27

HANGER SCHEDULE "USP" MANUFACTURER						
No.	SYMBOL	TYPE	GAUGE	FASTENERS	UPLIFT LBS CALCULATED	UPLIFT LBS PROVIDED
1	TAPL12	EMBEDDED ANCHOR	14	(6) 10d x 1-1/2" to SEAT (11) 10d TRSUSS / RAFTER	909 1212 @ GIRDER	1,385
2	JUS210	JOIST HANGER	16	(8) 10d HEADER (4) 10d JOIST	909	1,115
3	JUS210-2	JOIST HANGER	18	(8) 16d HEADER (6) 16d JOIST	1212 @ GIRDER	1,880
4	SKH210L/R	JOIST HANGER SKEWED	16	(14) 16d HEADER (10) 10d x 1-1/2" JOIST	303	1,035
5	SUH36	JOIST HANGER	16	(8) 10d HEADER (4) 10d x 1-1/2" JOIST	303	605
6	RT5	ANCHOR	18	(8) 8d JOIST (8) 8d BEAM	@ OPEN TRELLACE	430

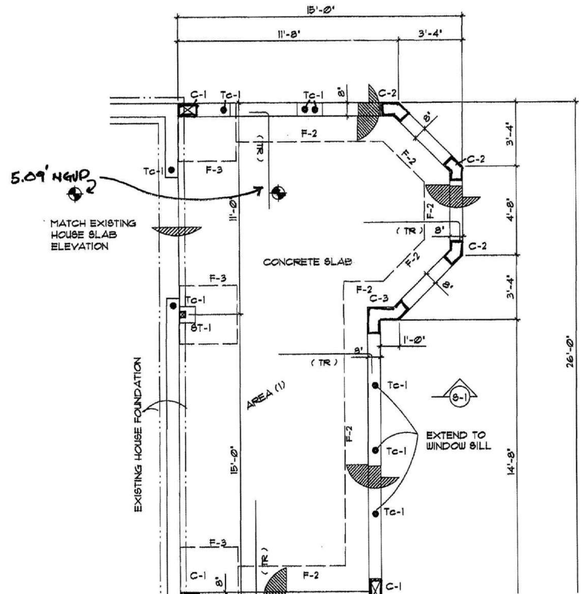

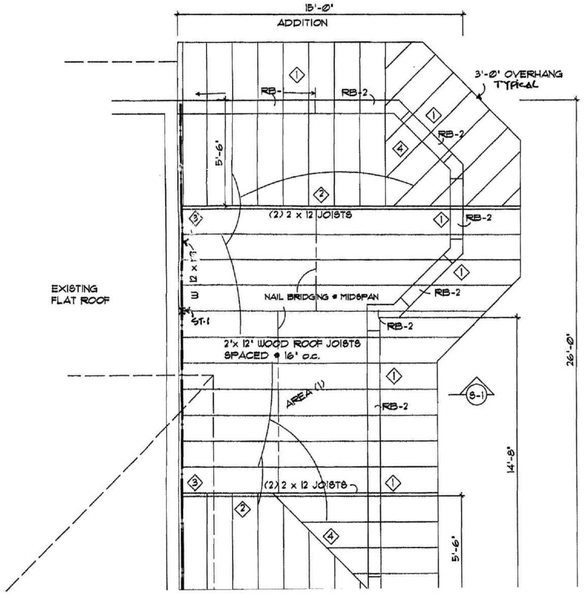

Date 1-14-08
Rev

SCANNED
NOV-1 2011
BUILDING DEPT

PROPOSED ADDITION to RESIDENCE
1404 JACKSON STREET
HOLLYWOOD, FLORIDA

Date 3/2/08

PGT Manufacturer or Equivalent
Outswing Aluminum French Door-

"DETAILS"

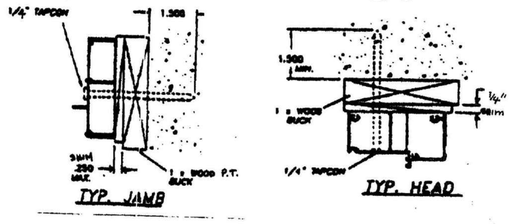

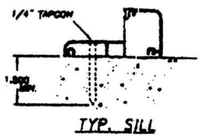

1. - BUCK- 1"x 6" P.T. WOOD BUCK SECURED TO MASONRY WITH 5/16" TAPCON SCREWS x 1 ¾" EMBED SPACED Min. 8" o.c.
2. - SHIM- WOOD , MAX. ¼"
3. - DOOR FRAME- WOOD- SECURE DOOR FRAME WITH FRAME ANCHOR-SCREWS #8 x 2-1/2" F.H.S.M.S. WITH 1" MINIMUM EMBEDMENT INTO 2x STUD OR WOOD BUCK OR 3/16" TAPCON SCREW WITH 1-1/2" MIN. EMBEDMENT INTO MASONRY. NUMBER OF SCREWS AND SPACING AS PER PRODUCT APPROVAL.
4. - PROVIDE CONTINOUS EXTERIOR CAULKING BETWEEN MASONRY, WOOD BUCK AND DOOR FRAME AND FRAMING /TRIM MEMBERS CONCRETE AND THRESHOLD.

*** REFER TO PRODUCT APPROVAL FOR COMPLETE INSTALLATION INFORMATION

EXTERIOR DOOR SECTION
MASONRY & FRAME WALL APPLICATION

EXTERIOR WINDOW SECTION
MASONRY & FRAME WALL APPLICATION sc 1-1/2"= 1'-0"

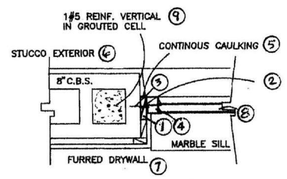

1-BUCK- 1"x 3" P.T. WOOD BUCK SECURED TO MASONRY/ FRAME WITH 5/16" x 1 ¾" EMBED TAPCON SCREWS SPACED 8" O.C.
2-SHIM- WOOD , MAX. ¼"
3-4 WINDOW FRAME, ALUMINUM (6063 T-5)- SECURE FRAME WITH FRAME ANCHOR-SCREWS #8 x 2-1/2" F.H.S.M.S. WITH 3/4" MINIMUM EMBEDMENT INTO WOOD BUCK OR 3/16" TAPCON SCREW WITH 1-1/4" MIN. EMBEDMENT INTO MASONRY. NUMBER OF SCREWS AND SPACING AS PER PRODUCT APPROVAL.
5- PROVIDE CONTINOUS EXTERIOR CAULKING BETWEEN MASONRY, WOOD BUCK AND WINDOW FRAME.
6- EXTERIOR STUCCO
7- DRYWALL ON P.T. WOOD FURRING – INTERIOR
8- WINDOW
9- REINFORCED MASONRY CELL – 8" C.M.U.
*** REFER TO PRODUCT APPROVAL FOR COMPLETE INSTALLATION INFORMATION

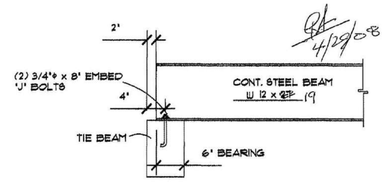

BEAM END SECTION



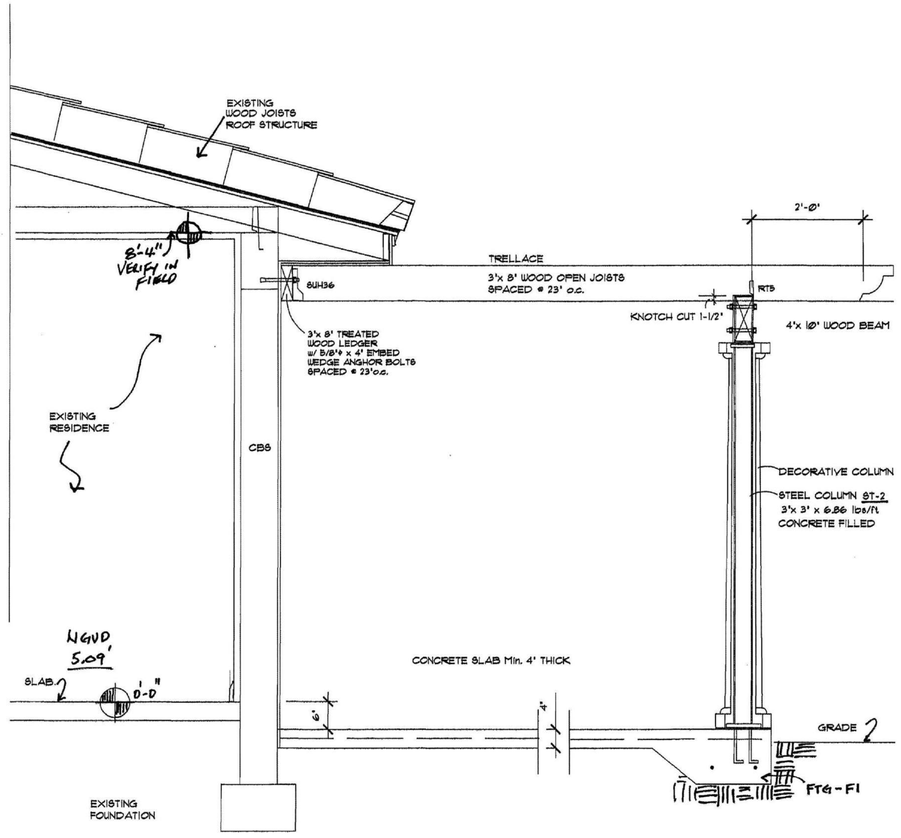

SECTION S-2 sc 3/4" = 1'- Ø"

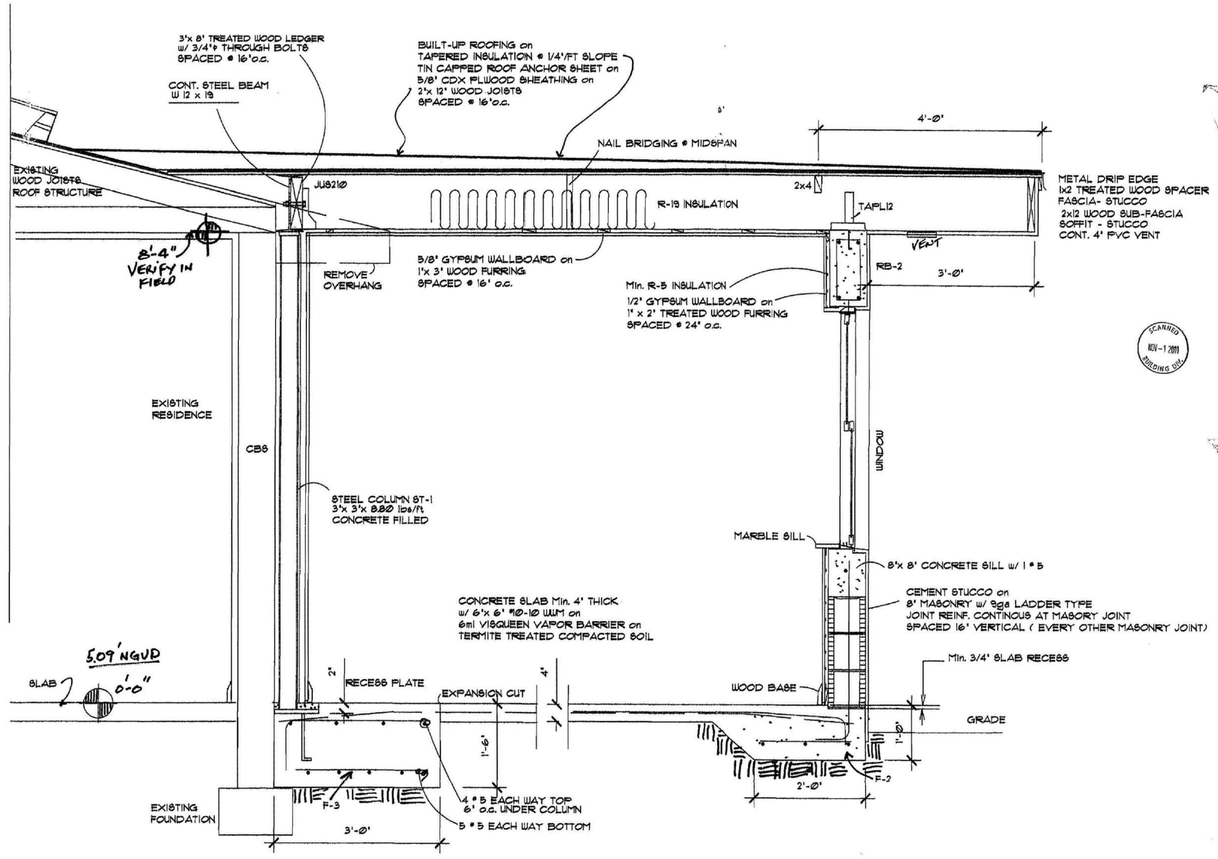

SECTION S-1 sc 3/4" = 1'- Ø"

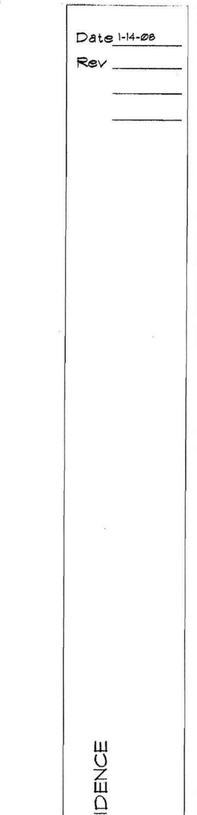

ROBERT G. ISHMAN

ROBERT G. ISHMAN P.A.
ARCHITECT
LICENSE AR 12684
2171 HOLLYWOOD BLVD.
HOLLYWOOD, FLORIDA 33020
Tel (954) 923-3695

PROJECT No. 2109

SHEET
A-3
of 3

Permit Details

Process #:	Permit #: B0106608	Master Permit: B0106608
Status: Closed		
List All Subpermits		

Site Information	
Address: 1404 JACKSON ST	**Folio#:** 514215026660
Sub-division: HOLLYWOOD 1-21 B	**Value:** $1,000.00
Lot: 17 **Block:** 89	**Sq Ft:** 0

Permit Information	
Application Type: FENCE-CHAIN LINK &/OR WOOD **Job Name:** KONDOLF **Film Number:** 0194616	**Application Date:** 00/00/00 **Permit Date:** 10/30/01 **CO/CC Date:** **Total Fees:** $35.35

Applicant / Contact Information
Name: CALANCIE AND COMPANY,INC. **Address:** 14640 MUSTANG TR. FORT LAUDERDALE, FL

Property Owner Information
Name: KONDOLF,MATHIAS **Address:**

Contractor Information
Name: CALANCIE AND COMPANY,INC. (Permits + Details) **Address:** 14640 MUSTANG TR. FORT LAUDERDALE, FL

CITY OF HOLLYWOOD, FLORID..

PERMIT APPLICATION

CITY OF HOLLYWOOD
BUILDING DIVISION

ALL OF THE FOLLOWING MUST BE FILLED IN BY APPLICANT, ACCORDING TO FS 713.135

DATE 10/30/01 TAX FOLIO #

DESCRIPTION: LOT 17, 2001 OCT 30 A 11:45 BLOCK 89 SUBDIVISION HOLLYWOOD

JOB NAME KONDOLF PHONE # (954) 579-0729

JOB ADDRESS 1404 JACKSON ST. CITY OF HOLLYWOOD STATE FL ZIP 33019

DETAILED WORK DESCRIPTION: INSTALL TWO SECTION OF FENCE W/ THREE GATES.

SQ.FT. ESTIMATED VALUE: $ 1000.00

CONTRACTOR'S NAME CALANCIE Co., INC. PHONE # (954) 579-0729

CONTRACTOR'S ADDRESS 14640 MUSTANG TR. CITY S.W RANCHES STATE FL ZIP 33330

CERTIFICATE OF COMPETENCY # CGC-1346C-X FAX # (954) 252-7569

CONTRACTOR'S STATE CERTIFICATION OR REGISTRATION NO. RR-0067677

OWNER OR FEE SIMPLE TITLE HOLDER'S NAME MATHIAS KONDOLF

OWNER OR FEE SIMPLE TITLE HOLDER'S ADDRESS 1404 JACKSON ST., HOLLYWOOD

BONDING COMPANY

BONDING COMPANY ADDRESS

ARCHITECT/ENGINEER'S NAME PHONE #

ARCHITECT/ENGINEER'S ADDRESS CITY STATE ZIP

MORTGAGE LENDER'S NAME

MORTGAGE LENDER'S ADDRESS

ELECTRICAL CONTRACTOR:

Phone # LICENSE #

Sworn before me this ____ of ____, 19____. ____
Notary Public

____ Value $ ____
Notarized Signature of Qualifier

MECHANICAL CONTRACTOR:

Phone # LICENSE #

Sworn before me this ____ of ____, 19____. ____
Notary Public

____ Value $ ____
Notarized Signature of Qualifier

PLUMBING CONTRACTOR: _____

Phone # _____ LICENSE # _____

Sworn before me this _____ of _____, 19____. _____
Notary Public

_____ Value $ _____
Notarized Signature of Qualifier

ROOFING CONTRACTOR: _____

Phone # _____ LICENSE # _____

Sworn before me this _____ of _____, 19____. _____
Notary Public

_____ Value $ _____
Notarized Signature of Qualifier

_____ CONTRACTOR: _____

Phone # _____ LICENSE # _____

Sworn before me this _____ of _____, 19____. _____
Notary Public

_____ Value $ _____
Notarized Signature of Qualifier

Application is hereby made to obtain a permit to do work and installations as indicated. I certify that no work or installation has commenced prior to the issuance of a permit and that all work will be performed to meet the standards of all laws regulating construction in the City of Hollywood, Florida. I understand that a separate permit must be secured for ELECTRICAL WORK, PLUMBING, SIGNS, WELLS, POOLS, BOILERS, TANKS, AIR CONDITIONERS, ETC.

OWNER'S AFFIDAVIT: I certify that all the foregoing information is accurate and that all work will be done in compliance with all applicable laws regulating construction and zoning.

WARNING TO OWNER: YOUR FAILURE TO RECORD A NOTICE OF COMMENCEMENT MAY RESULT IN YOUR PAYING TWICE FOR IMPROVEMENTS TO YOUR PROPERTY. IF YOU INTEND TO OBTAIN FINANCING, CONSULT WITH YOUR LENDER OR AN ATTORNEY BEFORE RECORDING YOUR NOTICE OF COMMENCEMENT.

DISCLOSURE STATEMENT

Owners of property when acting as their own contractor and providing all material supervision themselves, when building or improving farm outbuildings or one-family or two-family residences on such property for the occupancy of use of such owners and not offered for sale or lease, or building or improving commercial building at a cost of under $25,000 on such property for the occupancy or use of such owners and not offered for sale or lease. In an action brought under this part proof of the sale or lease, or offering for sale or lease, of more than one such structure by the owner-builder within 1 year after completion of same is prima facie evidence that the construction was undertaken for purposes of sale or lease. This subsection does not exempt any person who is employed by such owner and who acts in the capacity of a contractor.

SIGNATURE _____ SIGNATURE _____
Owner or Agent Prime Contractor (Owner/Builder)

DATE _____ DATE 10/30/01

_____ _____ 10-30-01
NOTARY as to Owner or Agent NOTARY as to Contractor

My Commission Expires _____ My Commission Expires _____

Within Fifteen (15) working days after the plans are submitted and accepted for a building permit, the applicant will be notified in writing that a permit is ready for issuance or that additional information is required. *Sixty (60) calendar days* after the date of such notification, where such additional information has not been submitted or the permit has not been purchased, the applicant and/or the permit shall become null and void. **Once the permit application package has become null and void it will be discarded by the Building Division, S.F.B.C. 302.1f.**

OFFICE USE ONLY

MASTER PERMIT # _____ MASTER PROCESS # 24078

PROCESS FEE PAID $ _____ APPLICATION APPROVED BY _____
Permit Officer

17-54 (Rev. 01/96)

CITY OF HOLLYWOOD
BUILDING DIVISION

2001 OCT 30 A 11:45

HISTORICAL

AREA

PLEASE DO REVIEW

AND

COMPUTER

DESIGN REVIEW

Date: 10-30-01 **Reviewer:** [signature]

Property Address: 1404 Jackson

☑ **APPROVED AS SHOWN**

☐ **APPROVED WITH CONDITIONS**
(Conditions on back of sheet)

☐ **DENIED**

B. **CHAIN LINK FENCES** MUST BE CONSTRUCTED PER SFBC SECTION 2811.1 AS PROVIDED IN THE TABLE BELOW.

TABLE 28-A
CHAIN LINK FENCE REQUIREMENTS

FENCE HEIGHT	TERMINAL POST DIMENSIONS (o.d. x wall thickness	LINE POST DIMENSIONS (o.d. x wall thickness)	TERMINAL POST CONCRETE FOUNDATION SIZE (Diameter x Depth)	LINE POST CONCTETE FOUNDATION SIZE (Diameter x Depth)
UP TO 4'	2-3/8" X .042"	1-5/8 X .047"	10" X 24"	8" X 24"
OVER 4'TO 5'	2-3/8" X .042"	1-7/8 X .055"	10" X 24"	8" X 24"
OVER 5' TO 6'	2-3/8" X .042"	1-7/8 X .065"	10" X 24"	8" X 24"
OVER 6' TO 8'	2-3/8" X .110"	2-3/8 X .095"	10" X 36"	10" X 36"
OVER 8' TO 10'	2-7/8" X .110"	2-3/8 X .130"	12" X 40"	10" X 40"
OVER 10' TO 12'	2-7/8" X .160"	2-7/8 X .120"	12" X 42"	12" X 42"

NOTES:

1. THIS TABLE IS ONLY APPLICABLE TO FENCES WITH UNRESTRICED AIR FLOW.
2. FABRIC- 12-1/2 GAUGE MINIMUM.
3. TENSION BANDS-USE ONE LESS THAN THE HEIGHT OF THE FENCE IN FEET, EVENLY SPACED.
4. FABRIC TIES-MUST BE THE SAME GAUGE AS THE GAUGE OF THE FABRIC, MINIMUM.
5. FABRIC TIE SPACING ON THE TOP RAIL-FIVE TIES BETWEEN POSTS, EVENLY SPACED.
6. FABRIC TIE SPACING ON LINE POSTS-ONE LESS THAN THE HEIGHT OF THE FENCE IN FEET, EVENLY SPACED.
7. EITHER TOP RAIL OR TOP TENSION WIRE SHALL BE USED.
8. BRACES MUST BE USED AT TERMINAL POSTS IF TOP TENSION WIRE USED INSTEAD OF TOP RAIL.
9. POST SPACING- 10 O.C. MAXIMUM.
10. POST SHALL EMBED TO WITHIN 6" OF THE BOTTOM OF THE FOUNDATION.
11. IN ORDER TO FOLLOW THE CONTOUR OF THE LAND, THE BOTTOM OF THE FENCE MAY CLEAR THE CONTOUR OF THE GROUND BY UP TO 6" WITHOUT INCREASING TABLE VALUES TO THE NEXT HIGHER LIMIT.
12. **FENCES SHOULD NOT BE CONSTRUCTED ON A PROPERTY LINE IN ANY MANNER THAT WOULD ENCROACH ABOVE GROUND OR BELOW GROUND ON TO AN ADJOINING PROPERTY.**

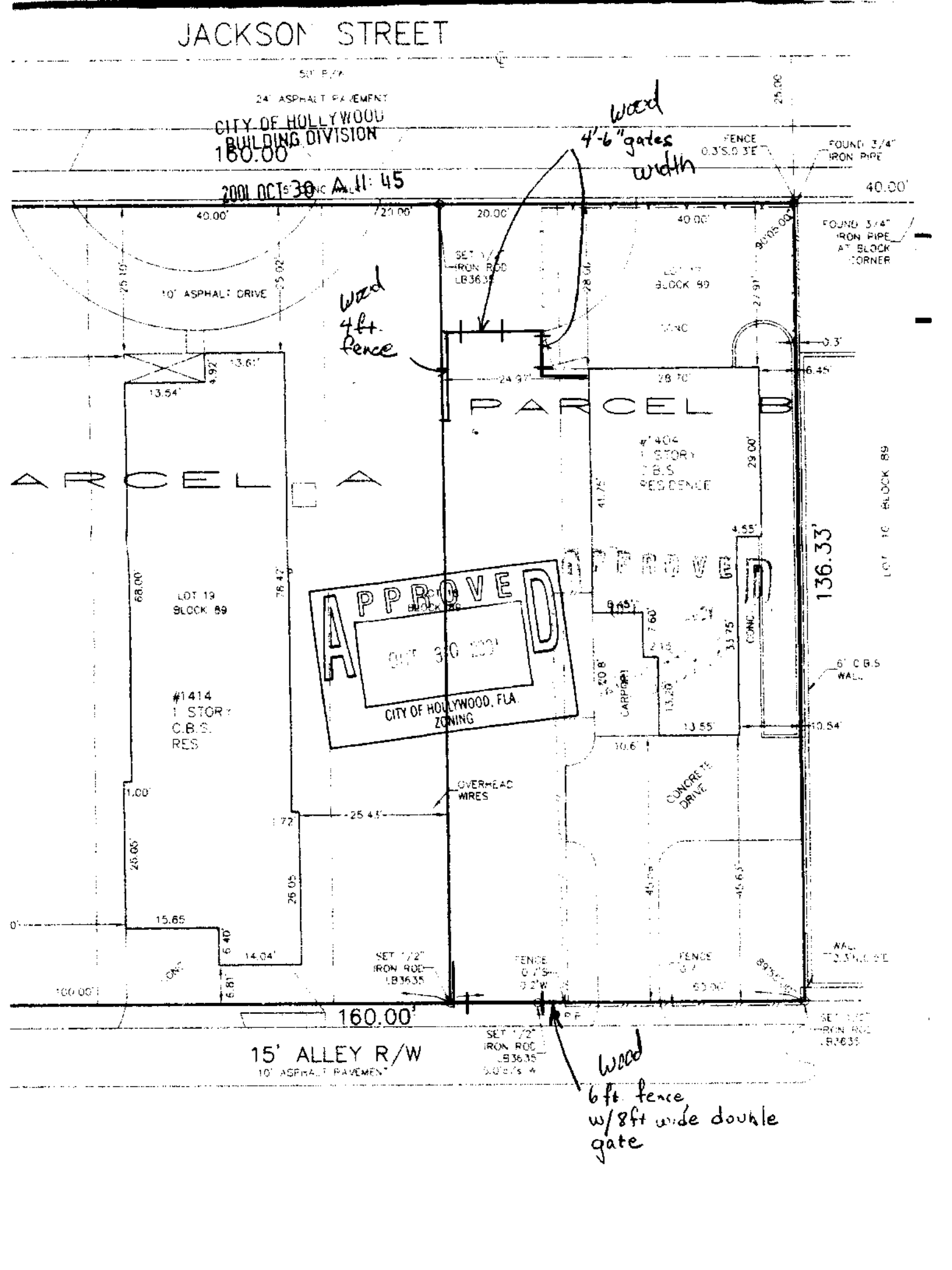
JACKSON STREET
24' ASPHALT PAVEMENT
CITY OF HOLLYWOOD
BUILDING DIVISION
2001 OCT 30 A 11: 45
160.00
wood
4'-6" gates
width
FENCE
FOUND 3/4" IRON PIPE
40.00'
FOUND 3/4" IRON PIPE AT BLOCK CORNER
10' ASPHALT DRIVE
SET 1/2" IRON ROD LB3635
wood
4ft. fence
PARCEL B
PARCEL A
#1404
1 STORY
C.B.S.
RESIDENCE
LOT 19
BLOCK 89
#1414
1 STORY
C.B.S.
RES
APPROVED
CITY OF HOLLYWOOD, FLA.
ZONING
136.33'
6' C.B.S. WALL
CONCRETE DRIVE
OVERHEAD WIRES
SET 1/2" IRON ROD LB3635
160.00'
15' ALLEY R/W
10' ASPHALT PAVEMENT
wood
6ft. fence
w/8ft wide double
gate

Permit Details

NO RECORDS ON FILE

Process #:	Permit #: B9803081	Master Permit: B9803081
Status: Closed		
List All Subpermits		

Site Information	
Address: 1404 JACKSON ST	**Folio#:** 514215026660
Sub-division: HOLLYWOOD 1-21 B	**Value:** $1,000.00
Lot: 17 **Block:** 89	**Sq Ft:** 0

Permit Information	
Application Type: ALTERATIONS-EXTERIOR **Job Name:** KONDOLF,MATHIAS **Film Number:** 9809141	**Application Date:** 00/00/00 **Permit Date:** 05/11/98 **CO/CC Date:** **Total Fees:** $35.35

Applicant / Contact Information
Name: KONDOLF,MATHIAS **Address:**

Property Owner Information
Name: KONDOLF,MATHIAS **Address:**

Contractor Information
Name: **Address:**

Permit Details

Process #:	Permit #: B9800815	Master Permit: B9800815
Status: Closed		
List All Subpermits		

Site Information	
Address: 1404 JACKSON ST	**Folio#:** 514215026660
Sub-division: HOLLYWOOD 1-21 B	**Value:** $900.00
Lot: 17 **Block:** 89	**Sq Ft:** 0

Permit Information	
Application Type: DECK - WITH ROOF STRUCTURE **Job Name:** KONDOLF,MATHIAS TR FR 26751 **Film Number:** 9903925	**Application Date:** 00/00/00 **Permit Date:** 02/09/98 **CO/CC Date:** **Total Fees:** $35.00

Applicant / Contact Information
Name: KONDOLF,MATHIAS **Address:**

Property Owner Information
Name: KONDOLF,MATHIAS **Address:**

Contractor Information
Name: **Address:**

5 subpermits were found for Master Permit

B9800815

View	Process #	Permit #	Description	Appl. Date	Permit Date
Details		**B9606067**	ROOFING - NEW - FLAT		**8/20/1996**
Details		**B9606069**	PAVING		**8/20/1996**
Details		**B9606070**	FENCE-CHAIN LINK &/OR WOOD		**8/20/1996**
Details		**B9606071**	SLAB - FOR FUTURE STRUCTURE		**8/20/1996**
Details		**B9800816**	PAVING		**2/9/1998**

JOB RECORD REPORT

PERMIT #
TRANSFERED FROM
TRANSFERED TO
MASTER PERMIT #

CONTRACTOR
ARCHITECT
ENGINEER

OWNER NAME
JOB ADDRESS
IMPROVEMENT DESCRIPTION

B9606066 OWNER
***** PROPERTY OWNER
B9800315 56468
B9606066

N/A

N/A

KONDOLF,MATHIAS
1404 JACKSON ST
DECK - WITH ROOF STRUCTURE
PATIO W/ROOF

IMPROVEMENT VALUE....$ 900.00
PERMIT FEE.....$ 35.00
COUNTY SURCHARGE.....$ 0.35
STATE SURCHARGE(RADON)..$ 0.00
PERMIT FEE DISCOUNT.....$ 0.00
PROCESS NUMBER..... 26751
DATE ISSUED..... 08/20/96
C OF O DATE..... 05/25/99
MICROFILM NUMBER..... 9903925
OCCUPANCY GROUP.....
CONSTRUCTION TYPE REQUIRED.....
ASSEMBLY CAPACITY..... 0
TEMPORARY DAYS..... 0

JOB: KONDOLF,MATHIAS TR TO 56468
BUILDING- FLOORS: 0 UNITS: 0 C/O: N
SQ-FT- BLDG: 0 ROOF: 0
WATER- GALN: 0 FEES: 0.00
SEWER- GALN: 0 FEES: 0.00

FOLIO # 5142150266O0 LOT 17 BLOCK 89 SUBDIVISION- HOLLYWOOD 1-21 B

INSPECTION HISTORY

INSPECTION DESCRIPTION	FLOOR	FULL PART	PASS FAIL	INSP DATE	INSP INITL	CODE SEC
ROOF SHEATHING/DECKING	1	FULL	PASS	07/18/97	PVM	0
PRIOR WORK						
REINF STEEL-FOUNDATION	1	FULL	PASS	07/18/97	PVM	0
PRIOR WORK						
TRANSFERRED TO -	0	FULL	PASS	02/06/98		0

OK per Owner to Pull Babs 8/19/96

Historical Site

CITY OF HOLLYWOOD, FLORIDA
PERMIT APPLICATION

ALL OF THE FOLLOWING MUST BE FILLED IN BY APPLICANT, ACCORDING TO FS 713.135

DATE 7/29 TAX FOLIO #

DESCRIPTION: LOT BLOCK SUBDIVISION

JOB NAME Mathias Kendall PHONE # 927-0514

JOB ADDRESS 1904 Jackson St CITY OF HOLLYWOOD STATE FL ZIP

DETAILED WORK DESCRIPTION: Patio / Roof

SQ.FT. ESTIMATED VALUE: $ 900

CONTRACTOR'S NAME Owner PHONE #

CONTRACTOR'S ADDRESS CITY STATE ZIP

CERTIFICATE OF COMPETENCY # FAX #

CONTRACTOR'S STATE CERTIFICATION OR REGISTRATION NO.

OWNER OR FEE SIMPLE TITLE HOLDER'S NAME

OWNER OR FEE SIMPLE TITLE HOLDER'S ADDRESS

BONDING COMPANY

BONDING COMPANY ADDRESS

ARCHITECT/ENGINEER'S NAME PHONE #

ARCHITECT/ENGINEER'S ADDRESS CITY STATE ZIP

MORTGAGE LENDER'S NAME

MORTGAGE LENDER'S ADDRESS

ELECTRICAL CONTRACTOR:

Phone # LICENSE #

Sworn before me this of , 19 .

Notary Public

Value $

Notarized Signature of Qualifier

MECHANICAL CONTRACTOR:

Phone # LICENSE #

Sworn before me this of , 19 .

Notary Public

Value $

Notarized Signature of Qualifier

PLUMBING CONTRACTOR: _____

Phone # _____ LICENSE # _____

Sworn before me this _____ of _____, 19_____. _____
Notary Public

_____ Value $ _____
Notarized Signature of Qualifier

ROOFING CONTRACTOR: _____

Phone # _____ LICENSE # _____

Sworn before me this _____ of _____, 19_____. _____
Notary Public

_____ Value $ _____
Notarized Signature of Qualifier

_____ CONTRACTOR: _____

Phone # _____ LICENSE # _____

Sworn before me this _____ of _____, 19_____. _____
Notary Public

_____ Value $ _____
Notarized Signature of Qualifier

Application is hereby made to obtain a permit to do work and installations as indicated. I certify that no work or installation has commenced prior to the issuance of a permit and that all work will be performed to meet the standards of all laws regulating construction in the City of Hollywood, Florida. I understand that a separate permit must be secured for ELECTRICAL WORK, PLUMBING, SIGNS, WELLS, POOLS, BOILERS, TANKS, AIR CONDITIONERS, ETC.

OWNER'S AFFIDAVIT: I certify that all the foregoing information is accurate and that all work will be done in compliance with all applicable laws regulating construction and zoning.

WARNING TO OWNER: YOUR FAILURE TO RECORD A NOTICE OF COMMENCEMENT MAY RESULT IN YOUR PAYING TWICE FOR IMPROVEMENTS TO YOUR PROPERTY. IF YOU INTEND TO OBTAIN FINANCING, CONSULT WITH YOUR LENDER OR AN ATTORNEY BEFORE RECORDING YOUR NOTICE OF COMMENCEMENT.

DISCLOSURE STATEMENT

Owners of property when acting as their own contractor and providing all material supervision themselves, when building or improving farm outbuildings or one-family or two-family residences on such property for the occupancy of use of such owners and not offered for sale or lease, or building or improving commercial building at a cost of under $25,000 on such property for the occupancy or use of such owners and not offered for sale or lease. In an action brought under this part proof of the sale or lease, or offering for sale or lease, of more than one such structure by the owner-builder within 1 year after completion of same is prima facie evidence that the construction was undertaken for purposes of sale or lease. This subsection does not exempt any person who is employed by such owner and who acts in the capacity of a contractor.

SIGNATURE _____ SIGNATURE _____
Owner or Agent Prime Contractor (Owner/Builder)

DATE _____ DATE _____

_____ _____
NOTARY as to Owner or Agent NOTARY as to Contractor

My Commission Expires _____ My Commission Expires _____

Within Fifteen (15) working days after the plans are submitted and accepted for a building permit, the applicant will be notified in writing that a permit is ready for issuance or that additional information is required. *Sixty (60) calendar days* after the date of such notification, where such additional information has not been submitted or the permit has not been purchased, the applicant and/or the permit shall become null and void **Once the permit application package has become null and void it will be discarded by the Building Division, S.F.B.C. 302.1f.**

OFFICE USE ONLY

MASTER PERMIT # _____ MASTER PROCESS # 24751

PROCESS FEE PAID $ _____ APPLICATION APPROVED BY _____
Permit Officer

17 54 (Rev 01/96)

HISTORICAL

AREA

PLEASE DO REVIEW

AND

COMPUTER

need more info 9/13/96

DESIGN REVIEW

Date: 9/13/96 REVIEWER: KB

Property Address: 1404 Jackson St.

☑ APPROVED AS SHOWN

☐ APPROVED WITH CONDITIONS
(Conditions on back of sheet)

☐ DENIED

SHEET 1 OF 1

1-27-96
Bill - recommend extension
Mike OK

RECEIVED
JAN 27 1997
City of Hollywood, Fla.
Dept. Dev. Admin.

5985414
B 960606
26751

CITY of HOLLYWOOD

Owner: A. MARIE MATHIAS
Contractor: PROPERTY OWNER
Job Address: 6104 JACKSON ST
Permit Number: 960606 Type of Permit: MECHANICAL
Process Number: 26751

Dear Owner/Contractor:

Our records indicate that there have been no inspections requested on the above referenced permit for 150 days from the date of either the issuance of the permit or the last performed inspection 08/20/96. IT IS IMPERATIVE THAT THE NEXT REQUIRED INSPECTION BE SCHEDULED AND PERFORMED IMMEDIATELY.

If no action is taken on this permit, the permit will then become null and void. SHOULD THE PERMIT BE ALLOWED TO BECOME NULL AND VOID, THE BUILDING DIVISION WILL BE REQUIRED TO ENFORCE THAT A NEW PERMIT BE OBTAINED AT THE COST OF THE ORIGINAL PERMIT FEE AMOUNT TO COMPLETE THE WORK OR THAT THE WORK PERFORMED UNDER THE ORIGINAL PERMIT BE REMOVED FROM THE SITE.

Hello mr. mike von Hofen.

I would Like to request of extension to complete Following permit applications

Owner	Kondolf, Mathias	
Contractor	property owner	
Job Address	01404 Jackson St.	
Process Number	28118	permit # B9606071 (SCAB)
~~Process #~~	RC751	" B9600066 (Deck)
	28117	" B9606070 (wood Fence)
	28116	" B7606069 (Awning)
	28115	" B9606067 (Flat roof)

I need as much time as possible due to poverty thank you

Mathias Kondolf

•CODIQT032163FEB0698«•9802« Resume NEXT ACTION» «

T H E C I T Y O F H O L L Y W O O D, F L O R I D A

METROPOLITAN PARCEL INFORMATION MANAGEMENT SYSTEM

==========

ACTION »UP« IN,UP,BY FOLIO NUMBER »514215026660«

PROPERTY OWNER

KONDOLF,MATHIAS

PROPERTY/MAILING ADDRESS

1404« »JACKSON « »ST« » «
1404 JACKSON ST
HOLLYWOOD FL 33020-5242

VIOLATION DESCRIPTION«

VIOLATION DATE	WORK DESCRIPTION	REPORTED BY	ABATED BY
PERMIT #	USER COMMENT	CONTRACTOR NAME	C of C #
1. 09/24/97	WORK COMMENCED W/O PERMIT	MVH	» «
	ALTERATIONS-EXTERIOR	000000«	»OWNER «
	CB #97-28828 1404 JACKSON ST	»PROPERTY OWNER	«
2. 01/20/98	EXPIRED PERMIT-NEW PERMIT REQD	EXP	»VHPD«
	B9606066 DECK - WITH ROOF STRUCTURE 26751	020698«	»OWNER «
	SYSTEM CREATED VIOLATION- EXPIRED PERMIT	»PROPERTY OWNER	«
3. 01/20/98	EXPIRED PERMIT-NEW PERMIT REQD	EXP	»VHPD«
	B9606069 PAVING 28116	020698«	»OWNER «
	SYSTEM CREATED VIOLATION- EXPIRED PERMIT	»PROPERTY OWNER	«
	END OF VIOLATIONS FOR THIS PARCEL		XMT:»●«

52468

31069

94-6705 94-936N

PIONEER SURVEYORS, INC.
SKETCH OF SURVEY

FOR: KONDOLF

TYPE OF SURVEY: BOUNDARY JOB #: 94-6705 DATE: 5/20/94 SCALE: 1" = 20'

ADDRESS: 1404 JACKSON STREET HOLLYWOOD, FLORIDA 33020

FLOOD ZONE: AE BASE FLOOD ELEVATION: 8.00 FT. LOWEST FLOOR ELEVATION: 5.00 FT.

C.P.N.#: 125113 0317 F 8/18/92 GARAGE ELEVATION:

LEGAL DESCRIPTION:

LOT 17 IN BLOCK 89 OF HOLLYWOOD ACCORDING TO THE PLAT THEREOF AS RECORDED IN PLAT BOOK 1 AT PAGE 21 OF THE PUBLIC RECORDS OF BROWARD COUNTY, FLORIDA.

CERTIFIED TO: (MATHIAS KONDOLF) 9270514
TOWN AND COUNTRY TITLE GUARANTY OF HOLLYWOOD
FIRST AMERICAN TITLE INSURANCE COMPANY AND/OR
COMMONWEALTH LAND TITLE INSURANCE COMPANY
R. L. SCHMIDT MORTGAGE, INC., ITS SUCCESSORS AND/OR ASSIGNS.
COUNTRYWIDE FUNDING CORP., AND/OR ITS ASSIGNS, AS THEIR INTEREST MAY APPEAR.

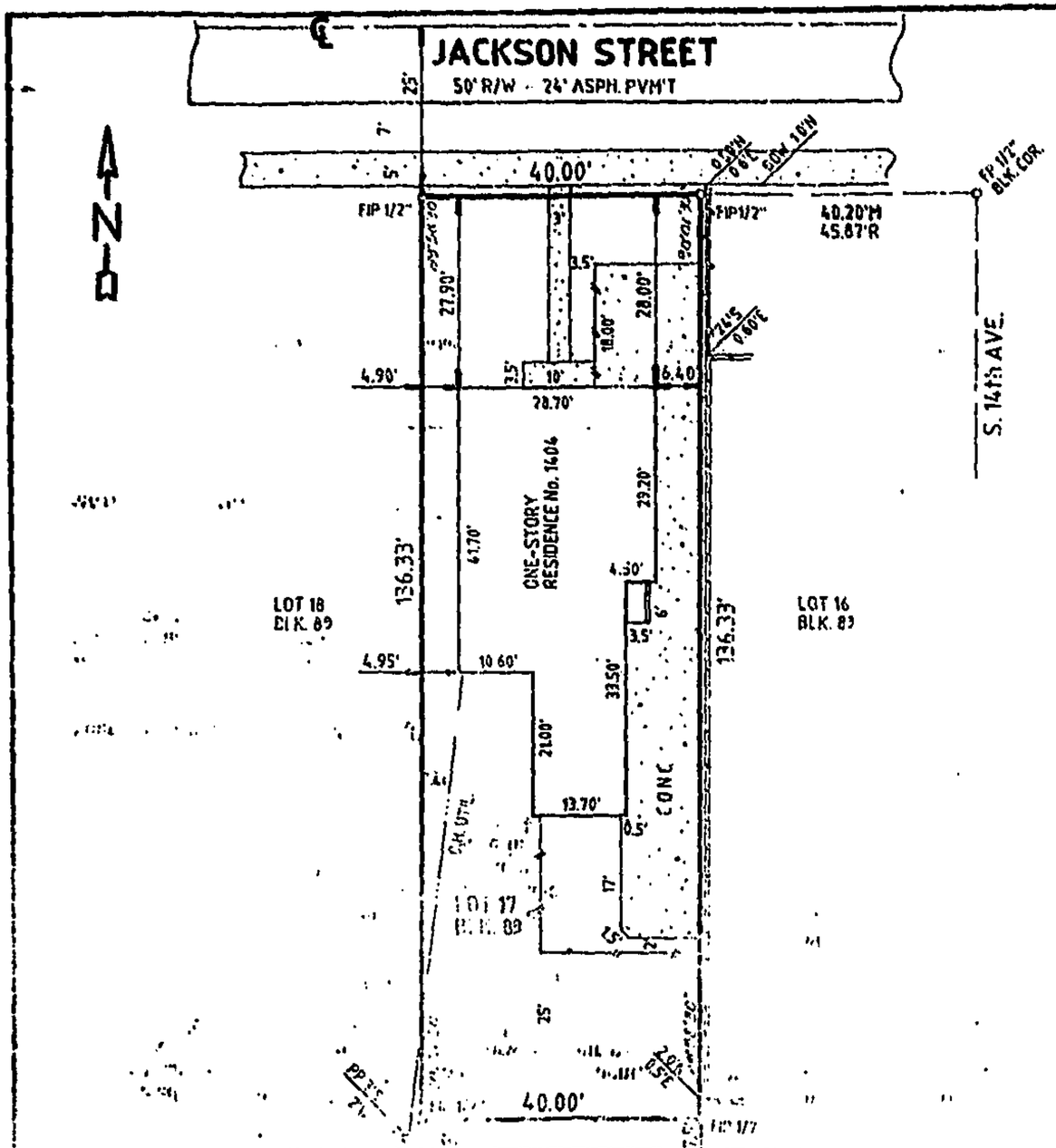

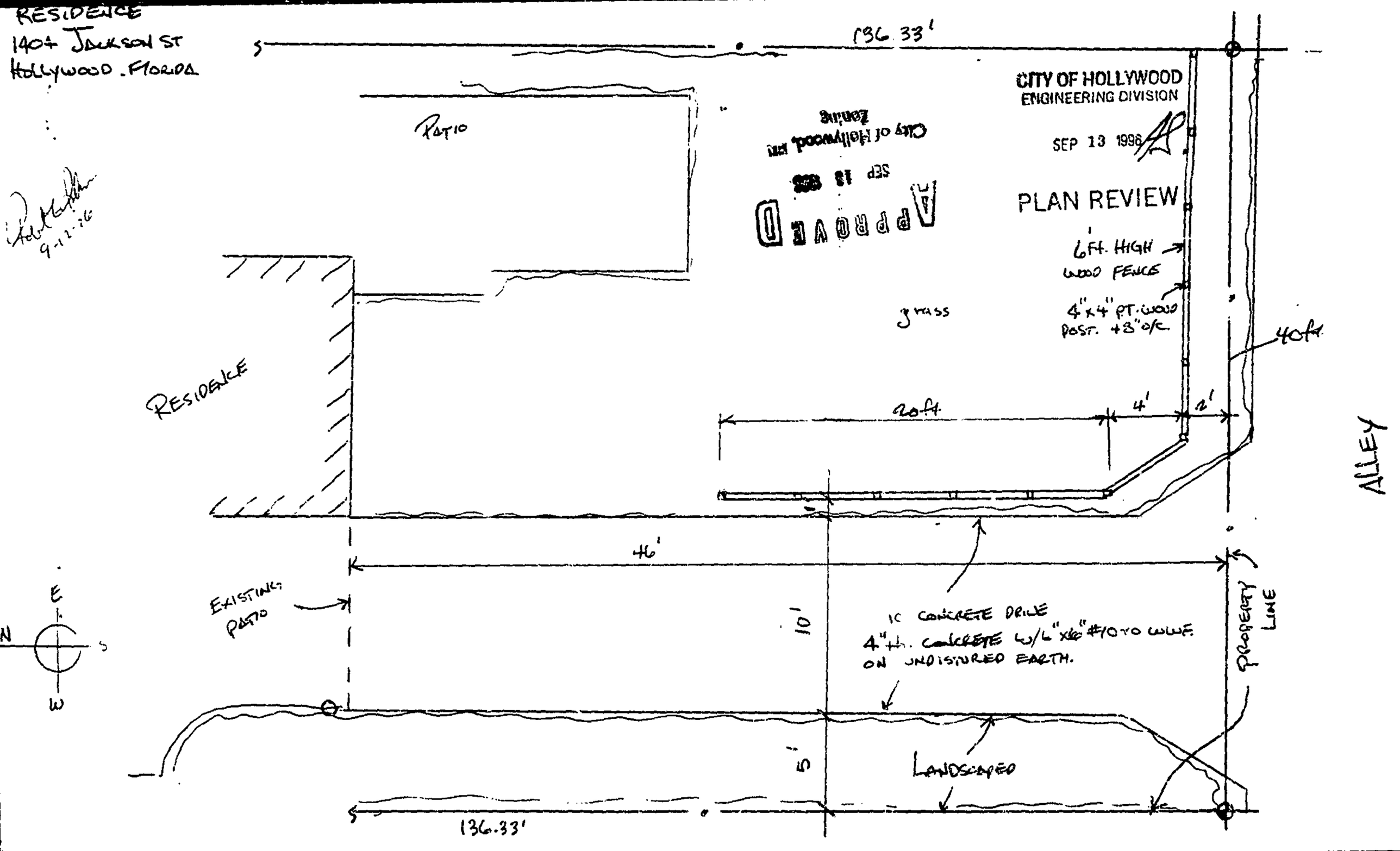
RESIDENCE
1404 JACKSON ST
HOLLYWOOD, FLORIDA
9-12-96
136.33'
CITY OF HOLLYWOOD
ENGINEERING DIVISION
SEP 13 1996
PLAN REVIEW
APPROVED
City of Hollywood, Fla
Zoning
SEP 13 1996
PATIO
RESIDENCE
6 Ft. HIGH WOOD FENCE
4"x4" PT. WOOD POST. 48" o/c
grass
40 ft.
20 ft.
4'
2'
ALLEY
46'
EXISTING PATIO
10'
10' CONCRETE DRIVE
4" th. CONCRETE w/6"x6" #10 TO WWF ON UNDISTURBED EARTH.
PROPERTY LINE
5'
LANDSCAPED
136.33'
E
N
S
W

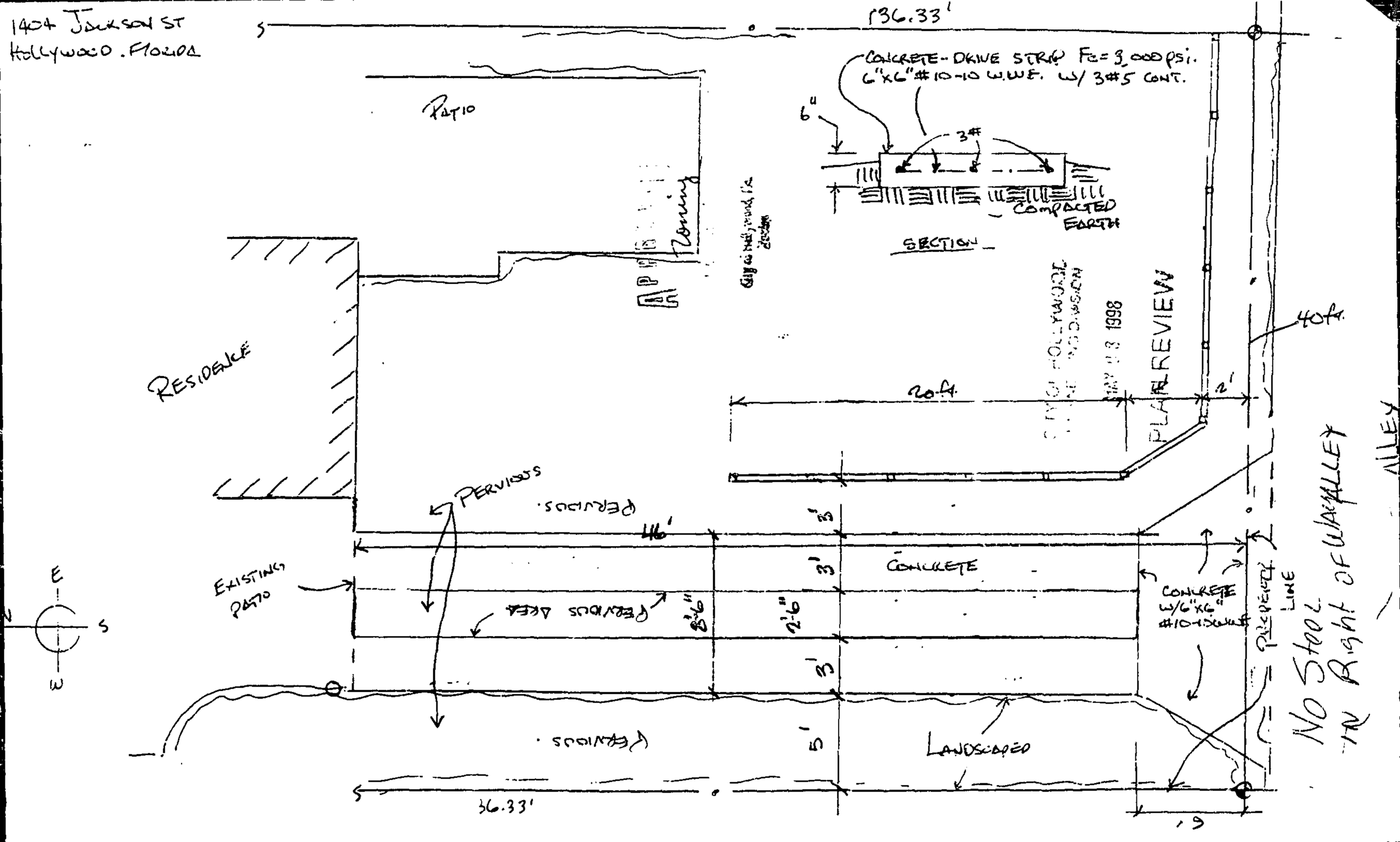
1404 JACKSON ST
HOLLYWOOD. FLORIDA
136.33'
CONCRETE-DRIVE STRIP Fc=3,000 psi.
6"x6" #10-10 W.W.F. W/ 3#5 CONT.
6"
3#
COMPACTED EARTH
SECTION
PATIO
RESIDENCE
40 ft.
20 ft.
2'
PERVIOUS
PERVIOUS
46'
3'
3'
3'
5'
CONCRETE
EXISTING PATIO
PERVIOUS AREA
8'-6"
2'-6"
CONCRETE W/6"x6" #10-10 W.W.F.
PROPERTY LINE
LANDSCAPED
36.33'
E
S
W
No Stool in Right of Way ALLEY
PLAN REVIEW
MAY 13 1998

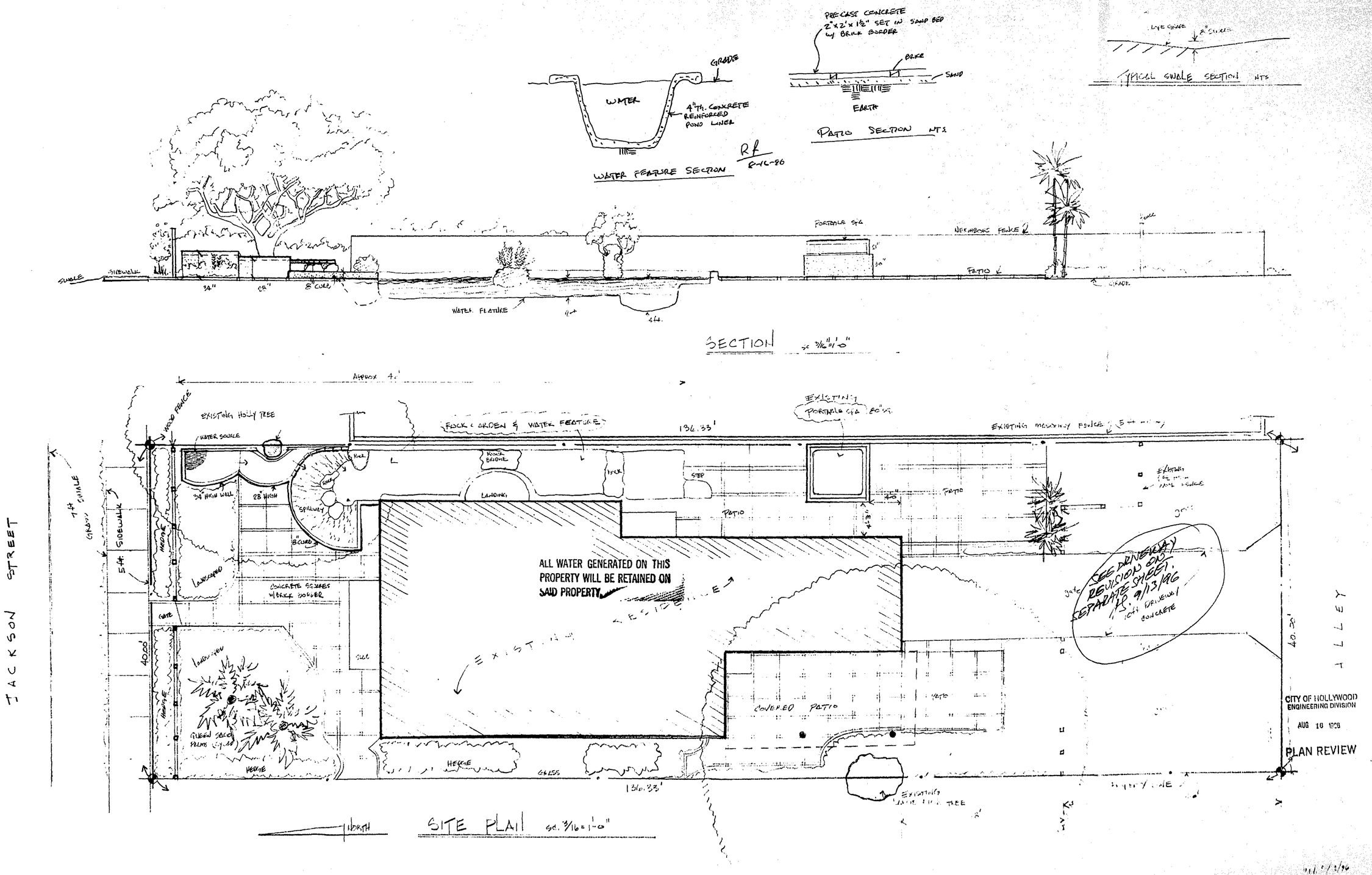

CITY OF HOLLYWOOD
ENGINEERING DIVISION
AUG 16 1996
PLAN REVIEW

PROPOSED ROCK GARDEN WITH WATER FEATURE AND SPA
1404 JACKSON STREET, HOLLYWOOD FLORIDA
MR. MATHIAS KONDOLF

8-13-96

ROBERT G. PAIMAN P.A.
ARCHITECT
Lic. AP 0012651
2205 HOLLYWOOD BLVD.
HOLLYWOOD, FLORIDA 33020
Tel. (305) 922 9925

DATE: JUNE 20, 96
JOB/M. 9611
SHEET 1 OF 1

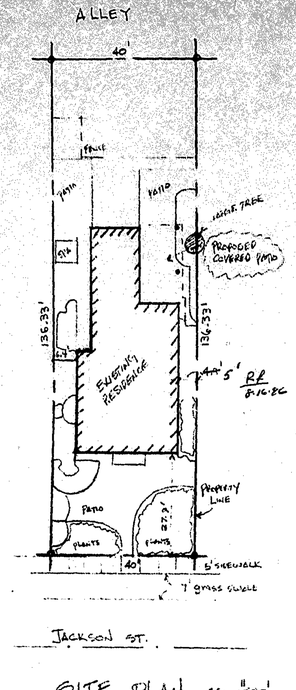

SITE PLAN sc. 1"=20'

LOT 17, BLOCK 89 OF HOLLYWOOD ACCORDING TO THE PLAT THEREOF AS RECORDED IN P.B. 1, PG. 21 OF THE PUBLIC RECORDS, BROWARD COUNTY, FLORIDA

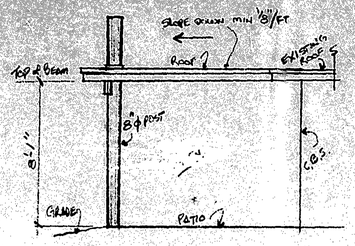

SOUTH SIDE

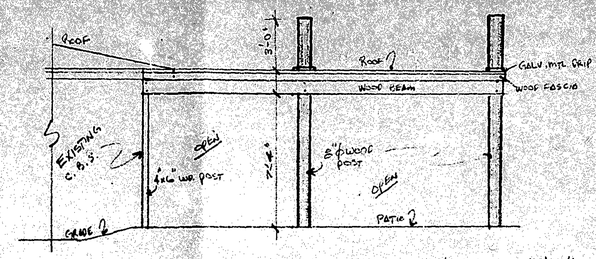

WEST SIDE ELEVATION sc 1/4"=1'-0"

ROOF DESIGN LOADS:

LIVE LOAD = 30 PSF
DEAD LOAD = 20 PSF
TOTAL 50 PSF

NET WIND UPLIFT = 33 PSF (DESIGNED AS COMPONENT)

ROOF NOTE: BUILT-UP ROOF

MINERAL SURFACED CAP SHEET (WHITE "FLINTLASTIC" MODIFIED BITUMEN) HOT MOPPED TO TYPE 30, ASTM D226, TYPE II, ORGANIC FELT APPLIED TO THE DECK IN SHINGLE FASHION, OVERLAPPING EACH PLY 19". THE UNDERLAYMENT SHALL BE SECURED TO THE DECK WITH MINIMUM 12 ga.x 1-1/4" CORROSION RESISTANT ROOFING NAILS AND MINIMUM 32 ga.x 1-5/8" DIAMETER TIN CAPS SPACED AT 12" IN THE FIELD AND 6" ON CENTER AT THE LAPS.

EDGE METAL SHALL BE .021" (28ga.), 2-1/2"x 2-1/2" GALVANIZED AND NAILED OVER THE TOP OF THE UNDERLAYMENT AT 6" ON CENTER WITH MINIMUM 12 ga.x 1-1/4" CORROSION RESISTANT ROOFING NAILS AT ALL PERIMETERS. AT CORNERS, THE ENDS OF ADJOINING EDGE METAL SHALL BE OVERLAPPED FOR 5", NOTCHED AND BENT AROUND THE CORNER. METAL EDGE SHALL BE OVERLAPPED NOT LESS THAN 3".

3/4" COX PLYWOOD SHEATHING SECURED TO WOOD ROOF JOISTS WITH 12d COMMON NAILS SPACED AT 6" o/c.

RTTW 1616 - 18 ga. w/ (12) 10d NAILS UPLIFT = 865 lbs.
HCS, 18 ga. w/ 8d NAILS (4) JOIST, (4) BEAM } UPLIFT = 475 lbs
TOTAL = 1340 lb

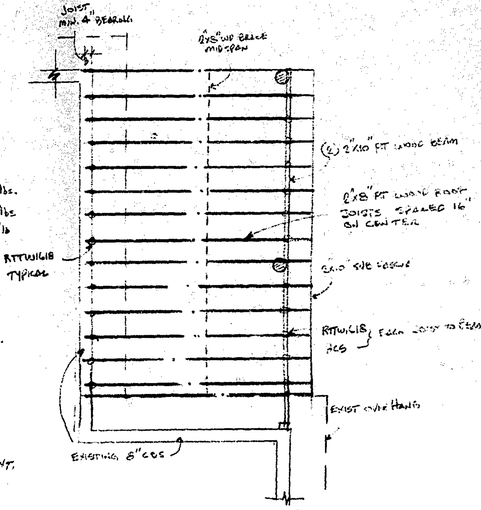

ROOF FRAMING PLAN sc 1/4"=1'-0"

DESIGN LOADS = LL. 30 P.S.F.
D.L. 20 P.S.F.
50 P.S.F.

PROVIDE WEATHER PROOF CONNECTION BETWEEN EXISTING & NEW ROOF

MODIFIED BITUMEN HOT MOPPED ASPHALT TO TYPE 30 ANCHOR SHEET TIN CAP NAILED TO 3/4" COX PLYWOOD SHEATHING SECURED WITH 10d NAILS SPACED @ 6" o.c. TO 2"x8" P.T. WOOD ROOF JOISTS SPACED 16" ON CENTER

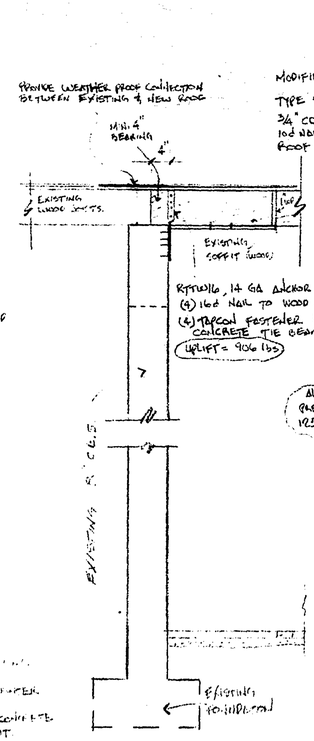

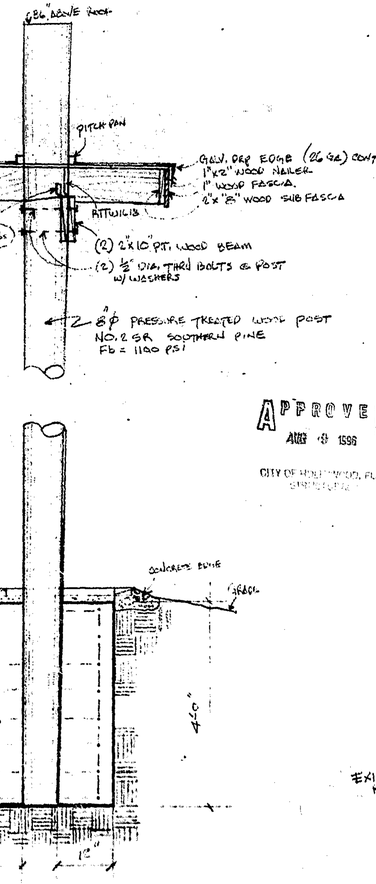

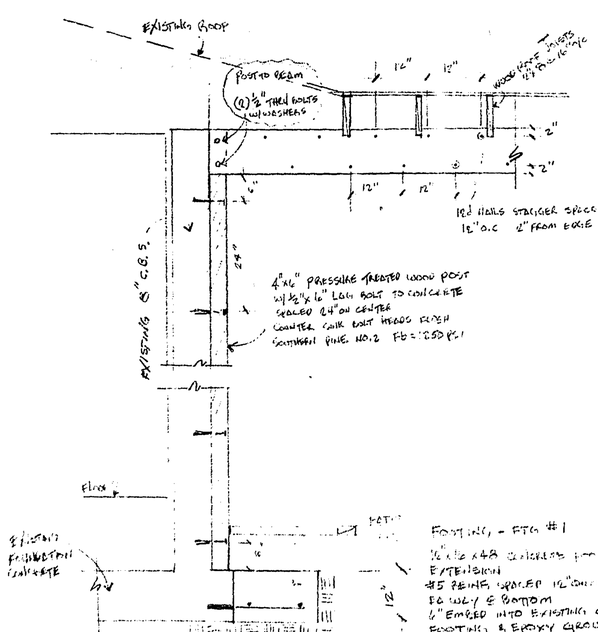

SECTION S-2 sc 3/4"=1'-0"

SECTION S-1 sc 3/4"=1'-0"

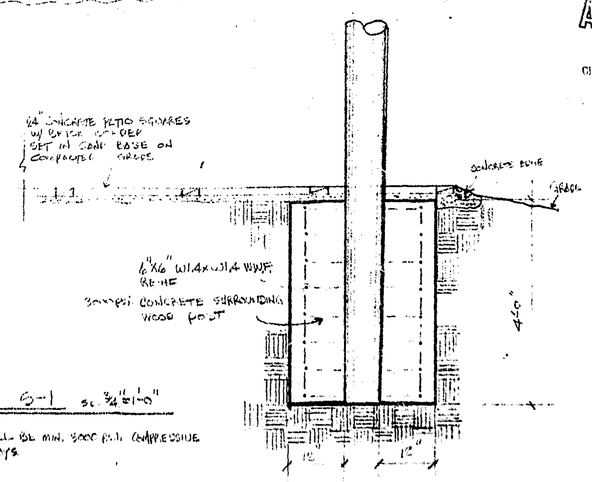

* ALL CONCRETE SHALL BE MIN. 3000 P.S.I. COMPRESSIVE STRENGTH @ 28 DAYS

APPROVED
AUG 16 1996
CITY OF HOLLYWOOD, FLA
BUILDING DIVISION

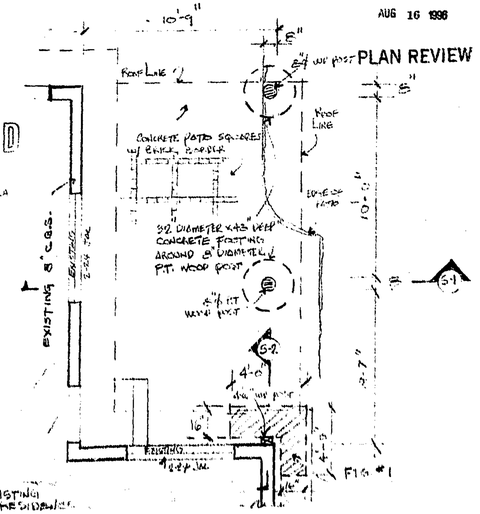

1ST FLOOR FOUNDATION PLAN sc 1/4"=1'-0"

PROPOSED COVERED PATIO
1404 JACKSON STREET
HOLLYWOOD, FLORIDA

CITY OF HOLLYWOOD
ENGINEERING DIVISION
AUG 16 1996
PLAN REVIEW

7-11-96
SEAL

ROBERT G. ISHMAN P.A.
ARCHITECT
2205 HOLLYWOOD BLVD.
HOLLYWOOD, FLORIDA 33020
TEL. (954) 923-9995

DATE: 7-10-96
REV:

JOB # 9614

SHEET 1 OF 1