GENERAL NOTES:

1. THE INFORMATION PROVIDED IN THESE DRAWINGS IS SOLELY TO ASSIST THE CONTRACTOR IN ASSESSING THE NATURE AND EXTENT OF CONDITIONS WHICH WILL BE ENCOUNTERED DURING THE COURSE OF THE WORK. THE CONTRACTORS ARE DIRECTED, PRIOR TO BIDDING, TO CONDUCT WHATEVER INVESTIGATIONS THEY DEEM NECESSARY TO ARRIVE AT THEIR OWN CONCLUSION REGARDING THE ACTUAL CONDITIONS THAT WILL BE ENCOUNTERED, AND UPON WHICH BIDS WILL BE BASED.

2. ALL CONSTRUCTION AND MATERIALS SHALL CONFORM TO APPLICABLE STANDARDS AND SPECIFICATIONS OF THE CITY OF HOLLYWOOD DEPARTMENT OF PUBLIC UTILITIES, ENGINEERING AND CONSTRUCTION SERVICES DIVISION (ECSD), AND ALL OTHER LOCAL, STATE AND NATIONAL CODES, WHERE APPLICABLE.

3. LOCATIONS, ELEVATIONS, SIZES, MATERIALS, ALIGNMENTS, AND DIMENSIONS OF EXISTING FACILITIES, UTILITIES AND OTHER FEATURES ARE SHOWN ACCORDING TO THE BEST INFORMATION AVAILABLE AT THE TIME OF THE PREPARATION OF THESE PLANS; AND DO NOT PURPORT TO BE ABSOLUTELY CORRECT. ALSO, THERE MAY HAVE BEEN OTHER IMPROVEMENTS, UTILITIES, ETC., WITHIN THE PROJECT AREA WHICH WERE CONSTRUCTED AFTER THE PREPARATION OF THESE PLANS AND/OR THE ORIGINAL SITE SURVEY. THE CONTRACTOR SHALL VERIFY THE LOCATIONS, ELEVATIONS, AND OTHER FEATURES AFFECTING HIS/HER WORK PRIOR TO CONSTRUCTION, AND NOTIFY THE ENGINEER IMMEDIATELY WHEN CONFLICT BETWEEN DRAWINGS AND ACTUAL CONDITIONS ARE DISCOVERED. THE ENGINEER ASSUMES NO RESPONSIBILITY FOR ANY FACILITIES SHOWN OR NOT SHOWN ON THE PLANS. THE CONTRACTOR SHALL WORK AS NEEDED TO AVOID CONFLICT WITH EXISTING UTILITIES (NO ADDITIONAL COST SHALL BE PAID FOR THIS WORK). EXISTING UTILITIES SHALL BE MAINTAINED IN SERVICE DURING CONSTRUCTION UNLESS OTHERWISE APPROVED BY THE RESPECTIVE UTILITY OWNER.

4. THE CONTRACTOR SHALL COORDINATE WITH ALL UTILITIES TO ARRANGE FOR THE RELOCATION AND TEMPORARY SUPPORT OF UTILITY FEATURES, ETC. AS NECESSARY TO COMPLETE THE WORK.

5. IT SHALL BE THE CONTRACTOR'S RESPONSIBILITY TO LOCATE AND PROTECT ANY AND ALL EXISTING UTILITIES ON THIS PROJECT, AND TO ENSURE THAT EXISTING UTILITIES ARE MAINTAINED IN SERVICE DURING CONSTRUCTION UNLESS APPROVED OTHERWISE BY THE UTILITY OWNER.

6. CONTRACTOR SHALL ADJUST ALL EXISTING UTILITY CASTINGS INCLUDING VALVE BOXES, MANHOLES, HAND-HOLES, PULL-BOXES, STORMWATER INLETS, AND SIMILAR STRUCTURES IN CONSTRUCTION AREA TO BE OVERLAID WITH ASPHALT PAVEMENT.

7. THE CONTRACTOR IS REQUIRED TO OBTAIN ALL APPLICABLE CONSTRUCTION AND ENVIRONMENTAL PERMITS PRIOR TO THE START OF CONSTRUCTION.

8. THE CONTRACTOR SHALL NOTIFY ECSD AT LEAST 48 HOURS PRIOR TO BEGINNING CONSTRUCTION.

9. PRIOR TO THE COMMENCEMENT OF CONSTRUCTION AND INSTALLATION OF THE PROPOSED IMPROVEMENTS, SHOP DRAWINGS SHALL BE SUBMITTED TO ECSD IN ACCORDANCE WITH THE CONTRACT DOCUMENT'S REQUIREMENTS, FOR APPROVAL. IN ADDITION, IT IS THE CONTRACTOR'S RESPONSIBILITY TO OBTAIN ANY OTHER AGENCY SHOP DRAWING APPROVAL, IF REQUIRED.

10. THE CONTRACTOR SHALL NOTIFY ECSD IMMEDIATELY FOR ANY CONFLICT ARISING DURING CONSTRUCTION OF ANY IMPROVEMENTS SHOWN ON THESE DRAWINGS. THIS WORK BY THE CONTRACTOR SHALL BE CONSIDERED INCIDENTAL TO THE CONTRACT AND NO ADDITIONAL COMPENSATION SHALL BE ALLOWED.

11. ELEVATIONS SHOWN ARE IN FEET AND ARE REFERENCED TO THE NORTH AMERICAN VERTICAL DATUM OF 1988 (NAVD 88).

ISSUED: 03/01/1994	DEPARTMENT OF PUBLIC UTILITIES STANDARD DETAIL		REVISED: 06/08/2014
DRAWN: EAM	GENERAL NOTES		DRAWING NO.
APPROVED: XXX			G-00

GENERAL NOTES (CONTINUED):

12. CITY OF HOLLYWOOD SHALL NOT PROVIDE STAGING / STORAGE AREA. CONTRACTOR SHALL SECURE STAGING / STORAGE AREA AS NECESSARY FOR CONSTRUCTION WORK.

13. CONTRACTOR SHALL HAUL AWAY EXCESSIVE STOCKPILE OF SOIL FOR DISPOSAL EVERY DAY. NO STOCKPILE SOIL IS ALLOWED TO BE LEFT ON THE CONSTRUCTION SITE OVER NIGHT.

14. CONTRACTOR SHALL CLEAN / SWEEP THE ROAD AT LEAST ONCE DAY OR AS REQUIRED BY THE ENGINEER.

15. CONTRACTOR SHALL PROTECT CATCH BASINS WITHIN / ADJACENT TO THE CONSTRUCTION SITE WITH ULTRA-DRAIN GUARDS. CONTRACTOR SHALL MAINTAIN AND REMOVE DIRT TRAPPED IN THE ULTRA-DRAIN GUARDS AFTER EACH RAIN EVENT.

16. THE CITY OF HOLLYWOOD HAS A NOISE ORDINANCE (CHAPTER 100) WHICH PROHIBITS EXCAVATION AND CONSTRUCTION BEFORE 8:00 A.M. AND AFTER 6:00 P.M., MONDAY THROUGH SATURDAY AND ALL DAY SUNDAY.

17. SUITABLE EXCAVATED MATERIAL SHALL BE USED IN FILL AREAS. NO SEPARATE PAY ITEM FOR THIS WORK, INCLUDE COST IN OTHER ITEMS.

18. ALL ROAD CROSSINGS ARE OPEN CUT AS PER THE REQUIREMENTS OF THE ECSD UNLESS OTHERWISE NOTED ON THE DRAWINGS.

19. THE CONTRACTOR SHALL REPLACE ALL PAVING, STABILIZING EARTH, DRIVEWAYS, PARKING LOTS, SIDEWALKS, ETC. TO SATISFY THE INSTALLATION OF THE PROPOSED IMPROVEMENTS WITH THE SAME TYPE OF MATERIAL THAT WAS REMOVED DURING CONSTRUCTION OR AS DIRECTED BY ECSD FIELD ENGINEER.

20. THE CONTRACTOR SHALL NOT ENCROACH INTO PRIVATE PROPERTY WITH PERSONNEL, MATERIAL OR EQUIPMENT. THE CONTRACTOR IS RESPONSIBLE TO MAINTAIN ACCESS AT ALL TIMES TO PRIVATE HOMES/BUSINESSES.

21. THE CONTRACTOR SHALL BE RESPONSIBLE FOR DAMAGE, REMOVAL OR MODIFICATION, CAUSED TO ANY IRRIGATION SYSTEM (PRIVATE OR PUBLIC) ACCIDENTALLY OR PURPOSELY. THE CONTRACTOR SHALL REPLACE ANY DAMAGED, REMOVED OR MODIFIED IRRIGATION PIPES, SPRINKLER HEADS OR OTHER PERTINENT APPURTENANCES TO MATCH OR EXCEED EXISTING CONDITIONS AT NO ADDITIONAL COST TO THE CITY.

22. MAIL BOXES, FENCES OR OTHER PRIVATE PROPERTY DAMAGED DURING THE CONSTRUCTION OF THE PROPOSED IMPROVEMENTS SHALL BE REPLACED TO MATCH OR EXCEED EXISTING CONDITION.

23. CONTRACTOR SHALL PROVIDE MAINTENANCE OF TRAFFIC IN ACCORDANCE WITH FDOT STANDARDS AND CITY OF HOLLYWOOD DEPARTMENT OF PUBLIC UTILITIES STANDARDS.

24. NO TREES ARE TO BE REMOVED OR RELOCATED WITHOUT PRIOR APPROVAL FROM THE ECSD FIELD ENGINEER.

25. THE CONTRACTOR IS RESPONSIBLE FOR OBTAINING THE NECESSARY TREE REMOVAL OR RELOCATION PERMITS FROM THE CITY OF HOLLYWOOD BUILDING DEPARTMENT FOR TREES LOCATED IN THE PUBLIC RIGHT OF WAY.

26. IT IS THE INTENT OF THESE PLANS TO BE IN ACCORDANCE WITH APPLICABLE CODES AND AUTHORITIES HAVING JURISDICTION. ANY DISCREPANCIES BETWEEN THESE PLANS AND APPLICABLE REGULATORY STANDARDS / REQUIREMENTS SHALL BE IMMEDIATELY BROUGHT TO THE ATTENTION OF ECSD.

ISSUED: 03/01/1994	DEPARTMENT OF PUBLIC UTILITIES STANDARD DETAIL		REVISED: 06/08/2014
DRAWN: EAM	GENERAL NOTES (CONTINUED)		DRAWING NO.
APPROVED: XXX			G-00.1

GENERAL NOTES (CONTINUED):

27. THE CONTRACTOR SHALL BE RESPONSIBLE FOR MAINTAINING THE INTEGRITY OF AND MAKING THE REPAIRS TO EXISTING PAVEMENT, SIDEWALKS, PIPES, CONDUITS, CURBS, CABLES, ETC., WHETHER OR NOT SHOWN ON THE PLANS DAMAGED AS A RESULT OF THE CONTRACTORS OPERATIONS AND/OR THOSE OF HIS SUBCONTRACTORS, AND SHALL RESTORE THEM PROMPTLY AT NO ADDITIONAL EXPENSE TO THE OWNER. CONTRACTOR SHALL REPORT ANY DAMAGE TO SIDEWALK, DRIVEWAY, ETC., PRIOR TO BEGINNING WORK IN ANY AREA.

28. WHERE NEW PAVEMENT MEETS EXISTING, CONNECTION SHALL BE MADE IN A NEAT STRAIGHT LINE AND FLUSH WITH EXISTING PAVEMENT TO MATCH EXISTING CONDITIONS.

29. UNDER NO CIRCUMSTANCES SHALL THE CONTRACTOR LEAVE EXCAVATED TRENCHES, OR PARTS OF, EXPOSED OR OPENED AT THE END OF THE WORKING DAY, WEEKENDS, HOLIDAYS OR OTHER TIMES, WHEN THE CONTRACTOR IS NOT WORKING, UNLESS OTHERWISE DIRECTED. ALL TRENCHES SHALL BE COVERED, FIRMLY SECURED AND MARKED ACCORDINGLY FOR PEDESTRIAN / VEHICULAR TRAFFIC.

30. ALL EXCAVATED MATERIAL REMOVED FROM THIS PROJECT SHALL BE DISPOSED OF OFF THE PROPERTY BY THE CONTRACTOR AT THE CONTRACTOR'S EXPENSE.

31. ALL CAST IRON PRODUCTS SHALL BE HEAVY DUTY CLASSIFICATION SUITABLE FOR HIGHWAY TRAFFIC LOADS, OR 20,000 LB.

32. ALL GRASSED AREAS AFFECTED BY CONSTRUCTION SHALL BE RE-SODDED.

33. THE CONTRACTOR SHALL BE RESPONSIBLE FOR THE PROVISION, INSTALLATION AND MAINTENANCE OF ALL TRAFFIC CONTROL AND SAFETY DEVICES, IN ACCORDANCE WITH SPECIFICATIONS OF THE LATEST REVISION OF FDOT DESIGN STANDARDS. IN ADDITION, THE CONTRACTOR IS RESPONSIBLE FOR THE RESETTING OF ALL TRAFFIC CONTROL AND INFORMATION SIGNAGE REMOVED DURING THE CONSTRUCTION PERIOD.

34. EXCAVATED OR OTHER MATERIAL STORED ADJACENT TO OR PARTIALLY UPON A ROADWAY PAVEMENT SHALL BE ADEQUATELY MARKED FOR TRAFFIC SAFETY AT ALL TIMES.

35. TEMPORARY PATCH MATERIAL MUST BE ON THE JOB SITE WHENEVER PAVEMENT IS CUT, OR THE CITY'S INSPECTOR WILL SHUT THE JOB DOWN.

36. CONTRACTOR MUST PROVIDE FLASHER ARROW SIGNAL FOR ANY LANE THAT IS CLOSED OR DIVERTED.

37. CONTRACTOR SHALL NOTIFY LAW ENFORCEMENT AND FIRE PROTECTION SERVICES TWENTY-FOUR (24) HOURS IN ADVANCE OF TRAFFIC DETOUR IN ACCORDANCE WITH SECTION 336.07 OF FLORIDA STATUTES.

38. CONTRACTOR TO RESTORE PAVEMENT TO ORIGINAL CONDITION AS REQUIRED.

39. CONTRACTOR SHALL BE RESPONSIBLE FOR PROVIDING DEWATERING PER SPECIFICATION SECTION 02/40 DEWATERING.

ISSUED: 03/01/1994	DEPARTMENT OF PUBLIC UTILITIES STANDARD DETAIL		REVISED: 06/08/2014
DRAWN: EAM	GENERAL NOTES (CONTINUED)		DRAWING NO.
APPROVED: XXX			G-00.2

GENERAL NOTES (CONTINUED):

40. THE CONTRACTOR SHALL GIVE AT LEAST 48 HOURS NOTICE TO UTILITY COMPANIES TO PROVIDE FOR THE LOCATION OF EXISTING UNDERGROUND UTILITIES IN ADVANCE OF CONSTRUCTION. CONTACT UTILITIES NOTIFICATION CENTER AT 811 OR 1-800-432-4770 (SUNSHINE ONE-CALL OF FLORIDA).

Always call 811 two full business days before you dig

Sunshine811.com

41. WHEN PVC PIPE IS USED, A METALLIZED MARKER TAPE SHALL BE INSTALLED CONTINUOUSLY 18" ABOVE THE PIPE. THE MARKER TAPE SHOULD BE IMPRINTED WITH A WARNING THAT THERE IS BURIED PIPE BELOW. THE TAPE SHALL BE MAGNA TEC, AS MANUFACTURED BY THOR ENTERPRISES INC. OR APPROVED EQUAL.

42. ALL CONNECTIONS TO EXISTING MAINS SHALL BE THE RESPONSIBILITY OF THE CONTRACTOR. WATER CONNECTIONS SHALL BE METERED, AND THE COST OF WATER AND TEMPORARY METER SHALL BE BORNE BY THE CONTRACTOR.

43. A COMPLETE AS-BUILT SURVEY SHALL BE ACCURATELY RECORDED OF THE UTILITY SYSTEM DURING CONSTRUCTION. AS-BUILT SURVEY SHALL BE SUBMITTED TO ECSD SIGNED AND SEALED BY A FLORIDA REGISTERED SURVEYOR PRIOR TO FINAL INSPECTION AND ACCEPTANCE OF PROJECT. THE COST OF SIGNED AND SEALED AS-BUILTS SHALL BE COVERED IN OVERALL BID. THE AS-BUILT SURVEY SHALL INCLUDE:

   a. PLAN VIEW SHOWING THE HORIZONTAL LOCATIONS OF EACH MANHOLE, INLET, VALVE, FITTING, BEND AND HORIZONTAL PIPE DEFLECTIONS WITH COORDINATES AND IN REFERENCE TO A SURVEY BASELINE OR RIGHT-OF-WAY CENTERLINE.

   b. THE PLAN VIEW SHALL ALSO SHOW SPOT ELEVATIONS OF THE TOP OF THE MAIN (WATER MAIN AND FORCE MAIN) OR PIPE INVERTS (GRAVITY MAINS) AT INTERVALS NOT TO EXCEED 100 FEET AS MEASURED ALONG MAIN. THE PLAN VIEW SHALL ALSO INCLUDE SPOT ELEVATIONS AT EACH MANHOLE, INLET, VALVE, FITTING, BEND AND VERTICAL PIPE DEFLECTION.

   c. THE PLAN VIEW SHALL ALSO SHOW THE HORIZONTAL SEPARATION FROM UNDERGROUND UTILITIES IMMEDIATELY ADJACENT OR PARALLEL TO THE NEW MAIN.

   d. PROFILE VIEW WITH SPOT ELEVATIONS OF THE TOP OF THE MAIN (WATER MAIN AND FORCE MAIN) OR PIPE INVERT (GRAVITY MAIN) AND OF THE FINISHED GRADE OR MANHOLE RIM DIRECTLY ABOVE THE MAIN AT INTERVALS NOT TO EXCEED 100 FEET AS MEASURED ALONG THE MAIN. THE PROFILE VIEW SHALL ALSO INCLUDE SPOT ELEVATIONS AT EACH MANHOLE, INLET, VALVE, FITTING, BEND AND VERTICAL PIPE DEFLECTION.

   e. THE PROFILE VIEW SHALL SHOW ALL UNDERGROUND UTILITIES CROSSING THE NEW MAIN AND THE VERTICAL SEPARATION PROVIDED BETWEEN THAT UNDERGROUND UTILITY AND THE NEW MAIN.

ISSUED: 03/01/1994	DEPARTMENT OF PUBLIC UTILITIES STANDARD DETAIL		REVISED: 06/08/2014
DRAWN: EAM	GENERAL NOTES (CONTINUED)		DRAWING NO.
APPROVED: XXX			G-00.3

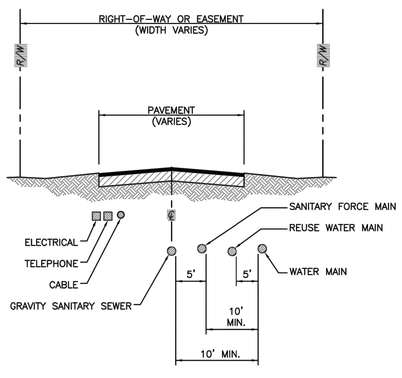

ISSUED: 03/01/1994	DEPARTMENT OF PUBLIC UTILITIES STANDARD DETAIL		REVISED: 06/08/2014
DRAWN: EAM	TYPICAL UTILITY ACCOMMODATION WITHIN RIGHT-OF-WAY OR EASEMENT		DRAWING NO.
APPROVED: XXX			G-01

WATER MAIN SEPARATION IN ACCORDANCE WITH F.A.C. RULE 62-555.314

OTHER PIPE	HORIZONTAL SEPARATION	CROSSING (1), (4)	JOINT SPACING @ CROSSING (FULL JOINT CENTERED) (8)
STORM SEWER, STORM WATER FORCE MAIN, RECLAIMED WATER (2)	3 ft minimum	18 inches is the minimum, except for storm sewer, then 6 inches is the minimum and 12 inched is preferred	Alternate 3 ft minimum
GRAVITY SANITARY SEWER, [3] SANITARY SEWER FORCE MAIN, RECLAIMED WATER	10 ft preferred 6 ft minimum	18 inches is the minimum, 12 inches is preferred	Alternate 6 ft minimum
ON-SITE SEWAGE TREATMENT & DISPOSAL SYSTEM	10 ft minimum		

1. WATER MAIN SHOULD CROSS ABOVE OTHER PIPE, WHEN WATER MAIN MUST BE BELOW OTHER PIPE, THE MINIMUM SEPARATION IS 12 INCHES.
2. RECLAIMED WATER REGULATED UNDER PART III OF CHAPTER 62-610, F.A.C.
3. AT LEAST 6 INCHES VERTICAL SEPARATION BETWEEN THE WATER MAIN IS LAID AT LEAST 6 INCHES ABOVE THE TOP OF THE GRAVITY SANITARY SEWER.
4. AS PER CURRENT CITY OF HOLLYWOOD STANDARDS BY CITY OF HOLLYWOOD, UNLESS OTHERWISE APPROVED.
5. AT VERTICAL MINIMUM SEPARATION BETWEEN SEWER AND WATER MAIN SHALL BE MAINTAINED BETWEEN ANY TYPE OF SEWER AND WATER MAIN IN PARALLEL INSTALLATIONS WHENEVER POSSIBLE.
6. WHERE IT IS EXPECTED THAT THE WATER MAIN WILL BE LAID WITH A 10 FOOT HORIZONTAL SEPARATION, THE WATER MAIN MUST BE LAID IN A SEPARATE TRENCH OR ON AN UNDISTURBED EARTH SHELF LOCATED ON ONE SIDE OF THE SEWER OR FORCE MAIN AT SUCH AN ELEVATION THAT THE BOTTOM OF THE WATER MAIN IS AT LEAST 18 INCHES ABOVE THE TOP OF THE SEWER.
7. WHERE IT IS EXPECTED THAT THE WATER MAIN WILL BE LAID WITH A VERTICAL SEPARATION LESS THAN 18 INCHES, THE WATER MAIN SHALL BE CONSTRUCTED OF DIP AND THE SANITARY SEWER OR FORCE MAIN SHALL BE CONSTRUCTED OF DIP WITH A MINIMUM VERTICAL DISTANCE OF 6 INCHES. THE WATER MAIN SHOULD ALWAYS BE ABOVE THE SEWER. JOINTS ON THE WATER MAIN SHALL BE LOCATED AS FAR AWAY AS POSSIBLE FROM JOINTS ON THE SEWER OR FORCE MAIN (STAGGERED JOINTS).
8. ALL JOINTS ON THE WATER MAIN WITHIN 20 FEET OF THE CROSSING MUST BE MECHANICALLY RESTRAINED.

ISSUED: 03/01/1994	DEPARTMENT OF PUBLIC UTILITIES STANDARD DETAIL		REVISED: 06/08/2014
DRAWN: EAM	SEPARATION REQUIREMENTS OF F.D.E.P. / D.N.R.		DRAWING NO.
APPROVED: XXX			G-01.1

ALL ELEVATIONS SHOWN ON THESE PLANS ARE BASED ON THE NAVD 88. TO CONVERT ELEVATIONS TO NGVD 29, ADD 1.60'.

Always call 811 two full business days before you dig

Sunshine811.com

FULL SET FOR TAC SUBMITTAL

HOLLYWOOD NEW POLICE HEADQUARTERS
PREPARED FOR
CITY OF HOLLYWOOD
HOLLYWOOD FL

SHEET NUMBER
C-502

No.	REVISIONS	DATE	BY

Kimley»Horn

© 2023 KIMLEY-HORN AND ASSOCIATES, INC.
8201 PETERS ROAD, SUITE 2200, PLANTATION, FL 33324
PHONE: 954-535-5100 FAX: 954-739-2247
WWW.KIMLEY-HORN.COM REGISTRY NO. 35106

LICENSED PROFESSIONAL
STEFANO VOLA, P.E.
FL LICENSE NUMBER 74655
DATE: 8/30/23

KHA PROJECT 044241040
DATE AUG 2023
SCALE AS SHOWN
DESIGNED BY SV
DRAWN BY SV
CHECKED BY SV

GENERAL UTILITY DETAILS
PROJECT NO. DCM-19-001190

This document, together with the concepts and designs presented herein, as an instrument of service, is intended only for the specific purpose and client for which it was prepared. Reuse of and improper reliance on this document without written authorization and adaptation by Kimley-Horn and Associates, Inc. shall be without liability to Kimley-Horn and Associates, Inc.

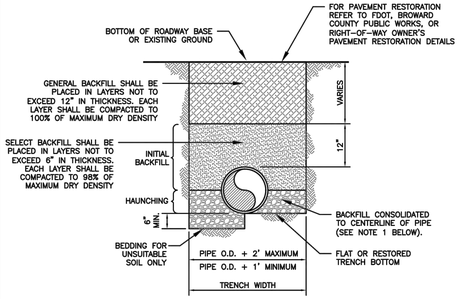

NOTES:

1. WHEN PIPE INSTALLATION IS ABOVE THE GROUND WATER TABLE ELEVATION, OR WHENEVER BEDDING COPPER PIPE UNDER ANY CONDITION, BEDDING MATERIAL SHALL BE CLEAN SANDY SOIL IF AVAILABLE WITHIN THE LIMITS OF CONSTRUCTION. IMPORTED BEDDING SHALL BE WELL GRADED, WASHED CRUSHED STONE (OR DRAINFIELD LIMEROCK). CRUSHED STONE SHALL CONSIST OF HARD, DURABLE, SUB-ANGULAR PARTICLES OF PROPER SIZE AND GRADATION, AND SHALL BE FREE FROM ORGANIC MATERIAL, WOOD, TRASH, SAND, LOAM, CLAY, EXCESS FINES, AND OTHER DELETERIOUS MATERIALS.
2. ALL BEDDING MATERIAL SHALL BE COMPACTED TO 95% OF MAXIMUM DENSITY BEFORE ANY PIPE IS LAID. FOR ADDITIONAL MATERIAL SPECIFICATIONS REFER TO SPECIFICATION SECTION 02222, "EXCAVATION AND BACKFILL FOR UTILITIES".
3. DENSITY TESTING SHALL BE IN ACCORDANCE WITH AASHTO T-180 AND ASTM D-3017.
4. BACKFILL TO COMPLY WITH FDOT DESIGN STANDARDS 125-8.

ISSUED: 03/01/1994	DEPARTMENT OF PUBLIC UTILITIES STANDARD DETAIL		REVISED: 06/08/2014
DRAWN: EAM	PIPE LAYING CONDITION TYPICAL SECTION (D.I.P.)		DRAWING NO. G-02
APPROVED: XXX			

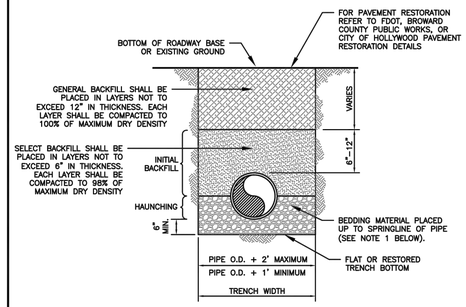

NOTES:

1. WHEN PIPE INSTALLATION IS ABOVE THE GROUND WATER TABLE ELEVATION, OR WHENEVER BEDDING COPPER PIPE UNDER ANY CONDITION, BEDDING MATERIAL SHALL BE CLEAN SANDY SOIL IF AVAILABLE WITHIN THE LIMITS OF CONSTRUCTION. IMPORTED BEDDING SHALL BE WELL GRADED, WASHED CRUSHED STONE (OR DRAINFIELD LIMEROCK). CRUSHED STONE SHALL CONSIST OF HARD, DURABLE, SUB-ANGULAR PARTICLES OF PROPER SIZE AND GRADATION, AND SHALL BE FREE FROM ORGANIC MATERIAL, WOOD, TRASH, SAND, LOAM, CLAY, EXCESS FINES, AND OTHER DELETERIOUS MATERIALS.
2. ALL BEDDING MATERIAL SHALL BE COMPACTED TO 95% OF MAXIMUM DENSITY BEFORE ANY PIPE IS LAID. FOR ADDITIONAL MATERIAL SPECIFICATIONS REFER TO SPECIFICATION SECTION 02222, "EXCAVATION AND BACKFILL FOR UTILITIES".
3. DENSITY TESTING SHALL BE IN ACCORDANCE WITH AASHTO T-180 AND ASTM D-3017.
4. BACKFILL TO COMPLY WITH FDOT DESIGN STANDARD 125-8.

ISSUED: 03/01/1994	DEPARTMENT OF PUBLIC UTILITIES STANDARD DETAIL		REVISED: 06/08/2014
DRAWN: EAM	PIPE LAYING CONDITION TYPICAL SECTION (P.V.C.)		DRAWING NO. G-03
APPROVED: XXX			

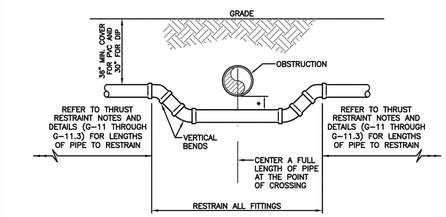

UTILITY CROSSING USING FITTINGS

* REFER TO STANDARD DETAIL G-01.1, "SEPARATION REQUIREMENTS", FOR FDEP AND HEALTH DEPARTMENT SEPARATION REQUIREMENTS.

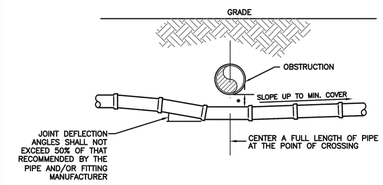

UTILITY CROSSING USING JOINT DEFLECTIONS

* REFER TO STANDARD DETAIL G-01.1, "SEPARATION REQUIREMENTS", FOR FDEP AND HEALTH DEPARTMENT SEPARATION REQUIREMENTS.

ISSUED: 03/01/1994	DEPARTMENT OF PUBLIC UTILITIES STANDARD DETAIL		REVISED: 06/08/2014
DRAWN: EAM	UTILITY CROSSING DETAIL		DRAWING NO. G-04
APPROVED: XXX			

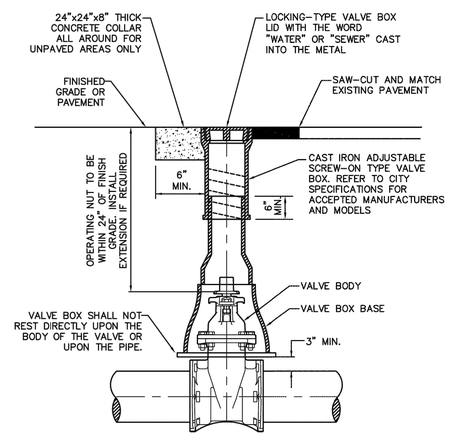

ISSUED: 03/01/1994	DEPARTMENT OF PUBLIC UTILITIES STANDARD DETAIL		REVISED: 06/08/2014
DRAWN: EAM	TYPICAL VALVE BOX SETTING		DRAWING NO. G-05
APPROVED: XXX			

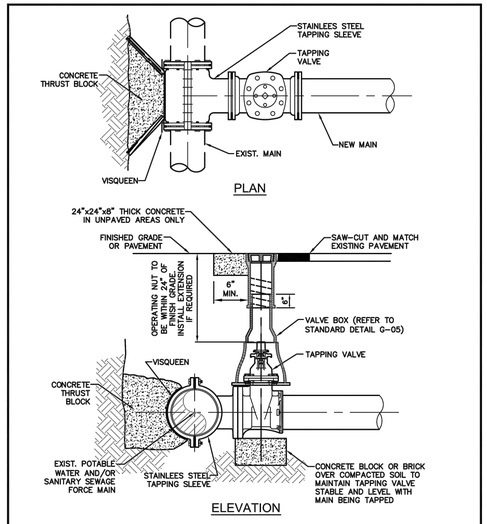

NOTES:

1. NOTIFY THE CITY OF HOLLYWOOD 48 HOURS IN ADVANCE OF PROPOSED TAP.
2. TAPPING MUST BE DONE IN THE PRESENCE OF AN AUTHORIZED CITY REPRESENTATIVE.
3. TEMPORARY THRUST BLOCKS TO BE INSTALLED AND REMAIN IN PLACE DURING TAPPING OPERATIONS.
4. FOR SEWAGE FORCE MAINS, REFER TO DETAIL OF PRIVATE FORCE MAIN TIE-IN AT PROPERTY LINE.
5. FOR WATER MAINS, A GATE VALVE OF SAME DIAMETER SHALL BE INSTALLED ON THE DOWNSTREAM SIDE OF THE TAPPING VALVE.

ISSUED: 03/01/1994	DEPARTMENT OF PUBLIC UTILITIES STANDARD DETAIL		REVISED: 06/08/2014
DRAWN: EAM	TYPICAL TAPPING SLEEVE AND VALVE SETTING		DRAWING NO. G-06
APPROVED: XXX			

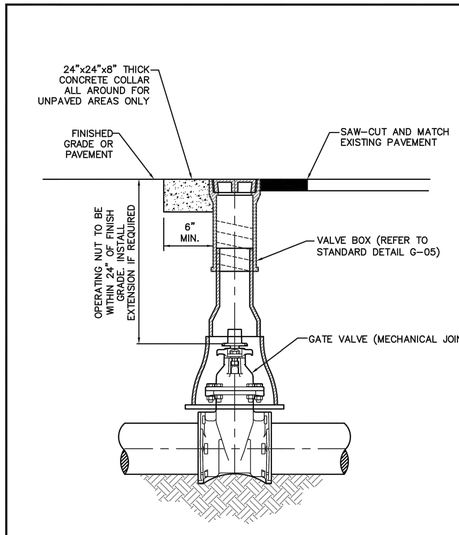

ISSUED: 03/01/1994	DEPARTMENT OF PUBLIC UTILITIES STANDARD DETAIL		REVISED: 06/08/2014
DRAWN: EAM	TYPICAL GATE VALVE AND VALVE BOX SETTING		DRAWING NO. G-07
APPROVED: XXX			

ALL ELEVATIONS SHOWN ON THESE PLANS ARE BASED ON NAVD 88. TO CONVERT ELEVATIONS TO NGVD 29, ADD 1.60'.

Always call 811 two full business days before you dig

Sunshine811.com

FULL SET FOR TAC SUBMITTAL

No.	REVISIONS	DATE	BY

Kimley»Horn

© 2023 KIMLEY-HORN AND ASSOCIATES, INC.
8201 PETERS ROAD, SUITE 2200, PLANTATION, FL 33324
PHONE: 954-535-5100 FAX: 954-739-2247
WWW.KIMLEY-HORN.COM REGISTRY NO. 35106

LICENSED PROFESSIONAL
STEFANO VOLA, P.E.
FL LICENSE NUMBER 74655
DATE: 8/30/23

KHA PROJECT 044241040
DATE AUG 2023
SCALE AS SHOWN
DESIGNED BY SV
DRAWN BY SV
CHECKED BY SV

GENERAL UTILITY DETAILS

PROJECT NO. DCM-19-001190

HOLLYWOOD NEW POLICE HEADQUARTERS
PREPARED FOR
CITY OF HOLLYWOOD
HOLLYWOOD FL

SHEET NUMBER
C-503

This document, together with the concepts and designs presented herein, as an instrument of service, is intended only for the specific purpose and client for which it was prepared. Reuse of and improper reliance on this document without written authorization and adaptation by Kimley-Horn and Associates, Inc. shall be without liability to Kimley-Horn and Associates, Inc.

RESILIENT SEATED GATE VALVE SPECIFICATIONS:

4" THROUGH 12" SIZE
(WATER AND FORCE MAIN)

1. GATE VALVES SHALL BE RESILIENT SEATED, MANUFACTURED TO MEET OR EXCEED THE REQUIREMENTS OF AWWA C509 (LATEST REVISION) AND IN ACCORDANCE WITH THE FOLLOWING SPECIFICATIONS:

1.1. VALVES SHALL HAVE AN UNOBSTRUCTED WATERWAY EQUAL TO OR GREATER THAN THE FULL NOMINAL DIAMETER OF THE VALVE.

1.2. THE VALVES ARE TO BE NON-RISING STEM WITH THE STEM MADE OF CAST, FORGED OR ROLLED BRONZE SHOWN IN AWWA C509, TWO STEM SEALS SHALL BE PROVIDED AND SHALL BE OF THE O-RING TYPE, ONE ABOVE AND ONE BELOW THE THRUST COLLAR WITH LUBRICANT BETWEEN O-RING.

1.3. THE STEM NUT, ALSO MADE OF BRONZE, MAY BE INDEPENDENT OF THE GATE OR CAST INTEGRALLY WITH THE GATE. IF THE STEM NUT IS CAST INTEGRALLY, THE THREADS SHALL BE STRAIGHT AND TRUE WITH THE AXIS OF THE STEM TO AVOID BINDING DURING THE OPENING OR CLOSING CYCLE.

1.4. THE SEALING MECHANISM SHALL CONSISTS OF A CAST IRON GATE HAVING A VULCANIZED SYNTHETIC RUBBER COATING OR A RUBBER SEAT MECHANICALLY RETAINED ON THE GATE, THE RESILIENT SEALING MECHANISM SHALL PROVIDE ZERO LEAKAGE AT THE WATER WORKING PRESSURE WHEN INSTALLED WITH THE LINE FLOW IN EITHER DIRECTION.

1.5. A 2-INCH SQUARE WRENCH NUT SHALL BE PROVIDED FOR OPERATING THE VALVE.

1.6. ALL VALVES ARE TO BE SUPPLIED COMPLETE AND READY FOR INSTALLATION INCLUDING, BUT NOT LIMITED TO ALL NUTS, BOLTS RINGS AND RUBBERS.

1.7. ALL VALVES ARE TO BE TESTED IN STRICT ACCORDANCE WITH AWWA C509 LATEST REVISION).

ISSUED: 03/01/1994	DEPARTMENT OF PUBLIC UTILITIES STANDARD DETAIL	REVISED: 06/08/2014
DRAWN: EAM	RESILIENT SEATED GATE VALVE SPECIFICATIONS	DRAWING NO. G-07.1
APPROVED: XXX		

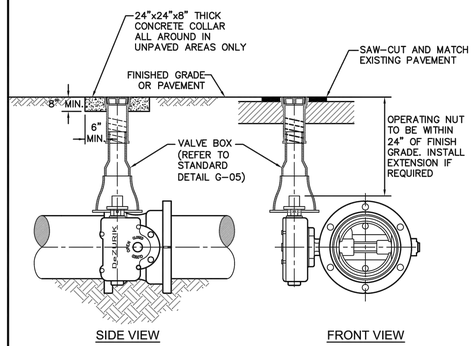

ISSUED: 03/01/1994	DEPARTMENT OF PUBLIC UTILITIES STANDARD DETAIL	REVISED: 06/08/2014
DRAWN: EAM	TYPICAL BUTTERFLY VALVE SETTING	DRAWING NO. G-08
APPROVED: XXX		

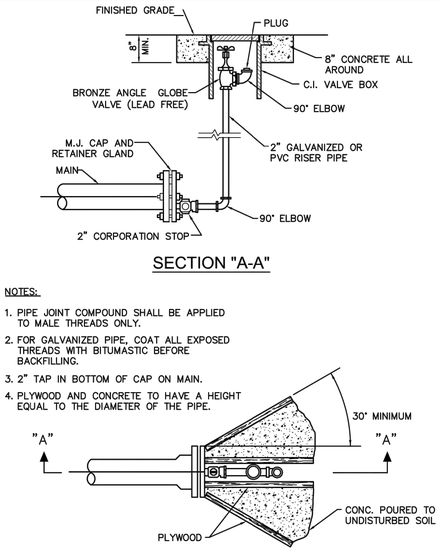

NOTES:

1. PIPE JOINT COMPOUND SHALL BE APPLIED TO MALE THREADS ONLY.
2. FOR GALVANIZED PIPE, COAT ALL EXPOSED THREADS WITH BITUMASTIC BEFORE BACKFILLING.
3. 2" TAP IN BOTTOM OF CAP ON MAIN.
4. PLYWOOD AND CONCRETE TO HAVE A HEIGHT EQUAL TO THE DIAMETER OF THE PIPE.

ISSUED: 03/01/1994	DEPARTMENT OF PUBLIC UTILITIES STANDARD DETAIL	REVISED: 06/08/2014
DRAWN: EAM	TERMINAL BLOW-OFF DETAIL	DRAWING NO. G-09
APPROVED: XXX		

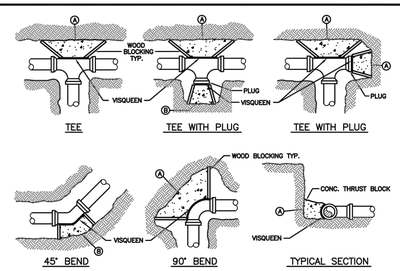

MINIMUM CONCRETE THRUST BLOCKING BEARING ON UNDISTURBED MATERIAL (SQ. FT.)				
MARK	PIPE SIZE			
	4" OR 6"	8"	10"	12"
A				
B				

NOTES:

1. THRUST BLOCKS ARE TO BE USED IN COMBINATION WITH, AND NOT IN LIEU OF, MECHANICAL JOINT RESTRAINTS AS REQUIRED BY THE CITY. REFER TO THRUST RESTRAINT DESIGN TABLE IN STANDARD DETAIL G-10.
2. THE AREAS IN THE TABLE ARE BASED ON _____ POUNDS PER SQUARE FOOT SOIL BEARING AGAINST THE UNDISTURBED TRENCH WALL AND ARE TO REPRESENT THE MINIMUM VERTICAL PROJECTED AREA AT THE THRUST BLOCK IN A PLANE PERPENDICULAR TO THE LINE BISECTING THE INCLUDING ANGLE OF THE FITTING.
3. POUR THRUST BLOCKS AGAINST UNDISTURBED MATERIAL. WHERE TRENCH WALL HAS BEEN DISTURBED, EVACUATE LOOSE MATERIAL AND EXTEND THRUST BLOCK TO UNDISTURBED MATERIAL.
4. ON BENDS AND TEES, EXTEND THRUST BLOCKS FULL LENGTH OF FITTING.
5. DO NOT COVER COUPLING OR JOINTS WITH CONCRETE.
6. CONCRETE TO BE 2500 P.S.I. MINIMUM 28 DAY STRENGTH.
7. TABLE TO BE COMPLETED BY DESIGN ENGINEER.

ISSUED: 03/01/1994	DEPARTMENT OF PUBLIC UTILITIES STANDARD DETAIL	REVISED: 06/08/2014
DRAWN: EAM	THRUST BLOCK DESIGN	DRAWING NO. G-10
APPROVED: XXX		

THRUST RESTRAINT NOTES:

1. ALL JOINTS BETWEEN BENDS AT HORIZONTAL & VERTICAL OFFSETS SHALL BE RESTRAINED.
2. MECHANICAL THRUST RESTRAINTS FOR D.I.P. FITTINGS ON D.I.P. OR P.V.C. PIPE SHALL BE MEGALUG AS MANUFACTURED BY EBAA IRON, INC., OR APPROVED EQUAL.
3. DUCTILE IRON FITTINGS UP TO 20-INCHES IN DIAMETER SHALL BE RESTRAINED BY MECHANICAL MEANS, I.E., MEGALUGS OR APPROVED EQUAL.
4. DUCTILE IRON FITTINGS 24-INCH IN DIAMETER AND ABOVE SHALL BE RESTRAINED BY MECHANICAL MEANS, I.E., MEGALUGS OR APPROVED EQUAL, WITH THE ADDITION OF THRUST BLOCKS AND CONCRETE ANCHORS AT THE DISCRETION OF THE ENGINEER OF RECORD.
5. ANY THRUST BLOCKS AND ANCHORS ARE TO BE DESIGNED BY THE ENGINEER OF RECORD. SIGNED AND SEALED CALCULATIONS SHALL BE SUBMITTED TO THE CITY FOR APPROVAL PRIOR TO INSTALLATION.
6. THRUST BLOCKS CONSISTING OF POURED-IN-PLACE CONCRETE SHALL HAVE A MINIMUM COMPRESSIVE STRENGH OF 2,500 PSI AFTER 28 DAYS.

ISSUED: 03/01/1994	DEPARTMENT OF PUBLIC UTILITIES STANDARD DETAIL	REVISED: 06/08/2014
DRAWN: EAM	JOINT RESTRAINT DESIGN FOR PVC AND DIP THRUST RESTRAINT NOTES	DRAWING NO. G-11
APPROVED: XXX		

HORIZONTAL BENDS			
PIPE DIA. (INCHES)	BEND (ANGLE)	RESTRAINED LENGTH (RL) (FT)	
		PVC	*DIP
16	11 1/4	.	.
	22 1/2	.	.
	45	.	.
	90	.	.
8	11 1/4	.	.
	22 1/2	.	.
	45	.	.
	90	.	.
6	11 1/4	.	.
	22 1/2	.	.
	45	.	.
	90	.	.
4	11 1/4	.	.
	22 1/2	.	.
	45	.	.
	90	.	.

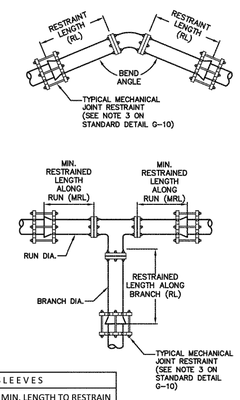

TEES AND TAPPING SLEEVES				
RUN DIA. (INCHES)	BRANCH DIA. (INCHES)	MIN. RESTRAINED LENGTH ALONG RUN (FT.)	MIN. LENGTH TO RESTRAIN ALONG BRANCH (FT.)	
			PVC	*DIP
16"	16"	.	.	.
8"	8"	.	.	.
8"	6"	.	.	.
8"	4"	.	.	.
6"	6"	.	.	.
4"	4"	.	.	.

ISSUED: 03/01/1994	DEPARTMENT OF PUBLIC UTILITIES STANDARD DETAIL	REVISED: 06/08/2014
DRAWN: EAM	JOINT RESTRAINT DESIGN FOR PVC AND DIP HORIZONTAL BENDS AND TEES	DRAWING NO. G-11.1
APPROVED: XXX		

THE DIMENSIONS SHOWN ON THESE PLANS ARE CALCULATED FOR PVC AND 88. TO ADD 20, ADD 1.60".

No.	REVISIONS	DATE	BY

Kimley»Horn
© 2023 KIMLEY-HORN AND ASSOCIATES, INC.
8201 PETERS ROAD, SUITE 2200, PLANTATION, FL 33324
PHONE: 954-535-5100 FAX: 954-739-2247
WWW.KIMLEY-HORN.COM REGISTRY NO. 35106

LICENSED PROFESSIONAL
STEFANO VIOLA, P.E.
FL LICENSE NUMBER 74655
DATE: 8/30/23

KHA PROJECT 044241040
DATE: AUG 2023
SCALE AS SHOWN
DESIGNED BY SV
DRAWN BY SV
CHECKED BY SV

GENERAL UTILITY DETAILS

PROJECT NO. DCM-19-001190

HOLLYWOOD NEW POLICE HEADQUARTERS
PREPARED FOR
CITY OF HOLLYWOOD
HOLLYWOOD FL

SHEET NUMBER
C-504

FULL SET FOR TAC SUBMITTAL

Always call 811 two full business days before you dig
Sunshine811.com

This document, together with the concepts and designs presented herein, as an instrument of service, is intended only for the specific purpose and client for which it was prepared. Reuse of and improper reliance on this document without written authorization and adaptation by Kimley-Horn and Associates, Inc. shall be without liability to Kimley-Horn and Associates, Inc.

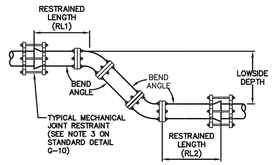

VERTICAL OFFSETS						
			PVC		*DIP	
PIPE DIA. (INCHES)	BEND (ANGLE)	LOWSIDE DEPTH (FT)	RESTRAINED LENGTHS		RESTRAINED LENGTHS	
			RL1 (FT.)	RL2 (FT.)	RL1 (FT.)	RL2 (FT.)
16	45	4	.	.	.	.
		5	.	.	.	.
		6	.	.	.	.
		7	.	.	.	.
8	45	4	.	.	.	.
		5	.	.	.	.
		6	.	.	.	.
		7	.	.	.	.
6	45	4	.	.	.	.
		5	.	.	.	.
		6	.	.	.	.
		7	.	.	.	.
4	45	4	.	.	.	.
		5	.	.	.	.
		6	.	.	.	.
		7	.	.	.	.

ISSUED: 03/01/1994	DEPARTMENT OF PUBLIC UTILITIES STANDARD DETAIL	REVISED: 06/08/2014
DRAWN: EAM	JOINT RESTRAINT DESIGN FOR PVC AND DIP VERTICAL OFFSETS	DRAWING NO. G-11.2
APPROVED: XXX		

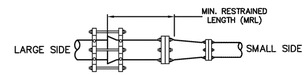

REDUCERS			
LARGE SIDE	SMALL SIDE	MIN. LENGTH TO RESTRAIN ON LARGE SIDE (FT)	
		PVC	DIP
8"	4"	.	.
6"	4"	.	.
4"	3"	.	.

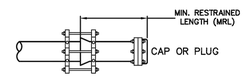

DEAD ENDS		
PIPE DIA. (INCHES)	MIN. RESTRAINED LENGTH (FT)	
	PVC	DIP
16"	.	.
8"	.	.
6"	.	.
4"	.	.

ISSUED: 03/01/1994	DEPARTMENT OF PUBLIC UTILITIES STANDARD DETAIL	REVISED: 06/08/2014
DRAWN: EAM	JOINT RESTRAINT DESIGN FOR PVC AND DIP REDUCERS AND DEAD ENDS	DRAWING NO. G-11.3
APPROVED: XXX		

FLEXIBLE PAVEMENT RESTORATION NOTES:

1. THE ABOVE DETAILS APPLY ONLY TO ASPHALT PAVEMENT RESTORATION OVER UTILITY TRENCHES CUT WITHIN CITY OF HOLLYWOOD RIGHTS-OF-WAY. FOR PAVEMENT RESTORATION WITHIN BROWARD COUNTY OR FDOT RIGHTS-OF-WAY REFER TO THE CORRESPONDING DETAILS FOR THOSE AGENCIES.
2. LIMEROCK BASE MATERIAL SHALL HAVE A MINIMUM L.B.R. OF 100 AND A MINIMUM CARBONATE CONTENT OF 70%. REPLACED BASE MATERIAL OVER TRENCH SHALL BE A MINIMUM OF 12" THICK".
3. LIMEROCK BASE MATERIAL SHALL BE PLACED IN 6" MAXIMUM (LOOSE MEASUREMENT) THICKNESS LAYERS WITH EACH LAYER THOROUGHLY ROLLED OR TAMPED AND COMPACTED TO 98% OF MAXIMUM DENSITY, PER AASHTO T-180, PRIOR TO THE PLACEMENT OF THE SUCCEEDING LAYERS.
4. STABILIZED SUBGRADE MATERIAL SHALL BE GRANULAR AND SHALL HAVE A MINIMUM L.B.R. OF 40.
5. BACKFILL SHALL BE PLACED AND COMPACTED IN ACCORDANCE WITH THE PIPE LAYING CONDITION TYPICAL SECTIONS IN DETAILS G-02 AND G-03, AND THE SPECIFICATIONS, BUT TESTING WILL BEGIN 12" ABOVE THE INSTALLED FACILITY.
6. ALL EDGES AND JOINTS OF EXISTING ASPHALT PAVEMENT SHALL BE SAW CUT TO STRAIGHT LINES, PARALLEL TO OR PERPENDICULAR TO THE ROADWAY, PRIOR TO THE RESURFACING.
7. RESURFACING MATERIAL SHALL BE FDOT SUPERPAVE, AND SHALL BE APPLIED A MINIMUM OF TWO INCH IN THICKNESS.
8. SURFACE TREATED PAVEMENT JOINTS SHALL BE LAPPED AND FEATHERED FOR A SMOOTH, FLUSH TRANSITION TO EXISTING PAVEMENT.
9. IF THE TRENCH IS FILLED TEMPORARILY, IT SHALL BE COVERED WITH A 2" ASPHALTIC CONCRETE PATCH TO KEEP THE FILL MATERIAL FROM RAVELING UNTIL REPLACED WITH A PERMANENT PATCH.
10. REFER TO SPECIFICATIONS FOR DETAILED PROCEDURES.
11. WHERE THE UTILITY TRENCH CROSSES EXISTING ASPHALT DRIVEWAYS, THE LIMEROCK BASE THICKNESS MAY BE A MINIMUM OF 6 INCHES THICK. REGARDLESS OF THE EXTENT OF IMPACT, THE ENTIRE DRIVEWAY SURFACE BETWEEN THE EDGE OF THE ROADWAY PAVEMENT AND PROPERTY LINE OR FRONT OF SIDEWALK SHALL BE OVERLAID USING 2-INCH THICK MINIMUM ASPHALTIC CONCRETE SURFACE COURSE WHERE INDICATED ON THE PLANS OR AS DIRECTED BY THE CITY/ENGINEER.

ISSUED: 03/01/1994	DEPARTMENT OF PUBLIC UTILITIES STANDARD DETAIL	REVISED: 06/08/2014
DRAWN: EAM	FLEXIBLE PAVEMENT RESTORATION NOTES	DRAWING NO. G-12
APPROVED: XXX		

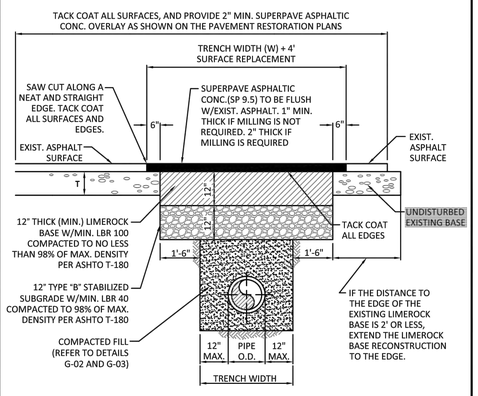

ISSUED: 03/01/1994	DEPARTMENT OF PUBLIC UTILITIES STANDARD DETAIL	REVISED: 06/08/2014
DRAWN: EAM	FLEXIBLE PAVEMENT RESTORATION FOR TRENCHES CUT PERPENDICULAR AND PARALLEL TO THE ROADWAY	DRAWING NO. G-12.1
APPROVED: XXX		

NOTE:
IF CRACKS APPEAR IN ASPHALT ADJACENT TO CUT, EDGES MUST BE SAW CUT TO A STRAIGHT LINE. 6" BEYOND THE FURTHEST CRACK

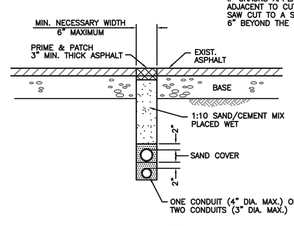

DETAIL "A"

MINIMUM UTILITY CROSSING OF ROADWAY

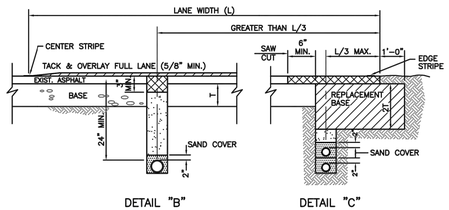

DETAIL "B" DETAIL "C"

MINIMUM PARALLEL UTILITY INSTALLATION

NOTE:
DETAILS NOT SHOWN SHALL BE AS PER DETAIL "A"

ISSUED: 03/01/1994	DEPARTMENT OF PUBLIC UTILITIES STANDARD DETAIL	REVISED: 06/08/2014
DRAWN: EAM	FLEXIBLE PAVEMENT RESTORATION FOR CONDUIT	DRAWING NO. G-12.2
APPROVED: XXX		

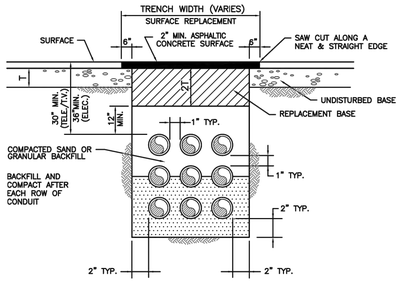

DETAIL "A"
(CROSSING ROADWAY)

NOTES:

1. REPLACED BASE MATERIAL OVER TRENCH SHALL BE TWICE THE THICKNESS OF THE ORIGINAL BASE, MINIMUM 12", MAXIMUM 18".
2. BASE MATERIAL SHALL BE PLACED IN 6" MAXIMUM (LOOSE MEASUREMENT) LAYERS AND EACH LAYER THOROUGHLY ROLLED OR TAMPED TO 98% OF MAXIMUM DENSITY, PER AASHTO T-180.
3. ASPHALT CONCRETE PAVEMENT JOINTS SHALL BE MECHANICALLY SAWED.
4. SURFACE TREATED PAVEMENT JOINTS SHALL BE LAPPED AND FEATHERED.
5. SURFACE MATERIAL SHALL BE CONSISTENT WITH THE EXISTING SURFACE.
6. BASE MATERIAL SHALL HAVE A MINIMUM LBR OF 100 AND A MINIMUM CARBONATE CONTENT OF 70%.
7. IF THE TRENCH IS FILLED TEMPORARILY, IT SHALL BE COVERED WITH A 2" ASPHALTIC CONCRETE PATCH TO KEEP THE FILL MATERIAL FROM RAVELING UNTIL REPLACED WITH A PERMANENT PATCH.
8. BACKFILL SHALL BE IN ACCORDANCE WITH DETAIL OF PIPE LAYING CONDITION TYPICAL SECTION, EXCEPT AS SHOWN ABOVE.

ISSUED: 03/01/1994	DEPARTMENT OF PUBLIC UTILITIES STANDARD DETAIL	REVISED: 06/08/2014
DRAWN: EAM	FLEXIBLE PAVEMENT RESTORATION FOR DUCTBANKS	DRAWING NO. G-12.3
APPROVED: XXX		

ELEVATIONS TO NGVD 29, ADD 1.60".

FULL SET FOR TAC SUBMITTAL

Always call 811 two full business days before you dig
Sunshine811.com

No.	REVISIONS	DATE	BY

Kimley»Horn
© 2023 KIMLEY-HORN AND ASSOCIATES, INC.
8201 PETERS ROAD, SUITE 2200, PLANTATION, FL 33324
PHONE: 954-535-5100 FAX: 954-739-2247
WWW.KIMLEY-HORN.COM REGISTRY NO. 35106

LICENSED PROFESSIONAL
STEFANO VIOLA, P.E.
FL LICENSE NUMBER 74655
DATE: 8/30/23

KHA PROJECT 044241040
DATE AUG 2023
SCALE AS SHOWN
DESIGNED BY SV
DRAWN BY SV
CHECKED BY SV

GENERAL UTILITY DETAILS

PROJECT NO. DCM-19-001190

HOLLYWOOD NEW POLICE HEADQUARTERS
PREPARED FOR
CITY OF HOLLYWOOD
HOLLYWOOD FL

SHEET NUMBER
C-505

This document, together with the concepts and designs presented herein, as an instrument of service, is intended only for the specific purpose and client for which it was prepared. Reuse of and improper reliance on this document without written authorization and adaptation by Kimley-Horn and Associates, Inc. shall be without liability to Kimley-Horn and Associates, Inc.

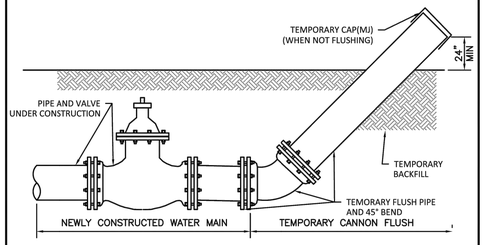

GENERAL NOTES:

1. FLUSHING LOCATIONS ARE TO BE PROPOSED BY CONTRACTOR AND APPROVED BY ECSD.
2. UPON COMPLETION OF THE PIPE INSTALLATION FOR ANY SECTION, THE MAIN SHALL BE CANNON FLUSHED TO REMOVE DIRT AND ANY OTHER FOREIGN MATTER.
3. INSTALL A TEMPORARY 45° BEND AND ASSOCIATED TEMPORARY PIPING AS SHOWN TO DIRECT THE FLUSHING WATER AWAY FROM THE IMMEDIATE WORK AREA AND EXERCISE DUE CARE SO AS TO ENSURE THAT THE WATER USED IN FLUSHING DOES NOT CAUSE A NUISANCE OR INFLICT PROPERTY DAMAGE.
4. BENDS AND PIPING SHALL BE THE SAME SIZE OR LARGER AS THE LINE BEING FLUSHED.
5. PRIOR TO THE ACTUAL LINE FLUSHING OPERATION THE CONTRACTOR SHALL PROPERLY NOTIFY ECSD INSPECTOR OF SUCH INTENDED WATER USE.
6. NO EXISTING VALVE SHALL BE OPERATED, EXCEPT BY AUTHORIZED CITY PERSONNEL.
7. FLUSHING SHALL NOT BE ACCOMPLISHED WITHOUT THE ACTUAL PRESENCE OF THE ECSD INSPECTOR.
8. AFTER THE LINE UNDER CONSTRUCTION HAS BEEN SUCCESSFULLY FLUSHED, THE CONTRACTOR SHALL REMOVE THE TEMPORARY PIPING ARRANGEMENT AND PROCEED WITH THE REMAINING CONSTRUCTION AS SPECIFIED.
9. ALL PIPING SHALL BE MECHANICALLY RESTRAINED IN ACCORDANCE WITH CITY STANDARDS.
10. IF REQUIRED BY ECSD, WATER SHALL MAINS SHALL BE CLEANED BY PIGGING.
11. CONTRACTOR WILL INSTALL A PRESSURE GAUGE AT OR NEAR THE FILL AND FLUSH LOCATION AND MAINTAIN A MINIMUM PRESSURE OF 40 PSI AT ALL TIMES. THE FILL VALVE WILL BE OPENED AND CLOSED SLOWLY TO AVOID RAPID PRESSURE CHANGES IN THE WATER SYSTEM.
12. CONTRACTOR IS CAUTIONED THAT GOVERNING AGENCIES OR UTILITIES MAY HAVE REGULATIONS LIMITING OR PROHIBITING DISCHARGE INTO SEWERS, SURFACE WATERS, CANALS, DITCHES AND OTHER CONVEYANCES/RETENTION AREA. ALL COMPLIANCE WITH GOVERNING AGENCIES REQUIREMENTS (INCLUDING PERMITTING, IF REQUIRED) IS THE SOLE RESPONSIBILITY OF THE CONTRACTOR.
13. CANNON FLUSHING TO PROCEED AFTER HEALTH DEPARTMENT CLEARANCE IS RECEIVED.

ISSUED: 03/01/1994	DEPARTMENT OF PUBLIC UTILITIES STANDARD DETAIL		REVISED: 06/08/2014
DRAWN: EAM	CANNON FLUSHING		DRAWING NO.
APPROVED: XXX			G-13

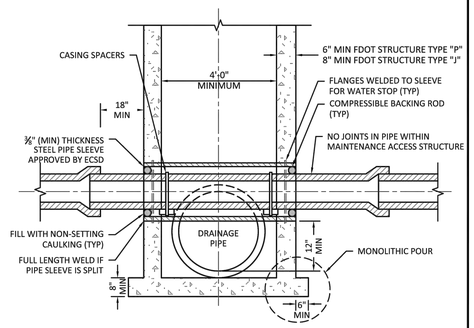

NOTES:

1. ALL CONFLICT MAINTENANCE ACCESS STRUCTURE SHALL CONFORM TO THE DETAILS SHOWN ON THIS DRAWING, AND TO THE REQUIREMENTS OF ASTM C-478 AND BROWARD COUNTY HIGHWAY CONSTRUCTION AND ENGINEERING DIVISION'S "MINIMUM STANDARDS", LATEST EDITION.
2. POTABLE WATER PIPE SHALL NOT PASS THROUGH OR CONTACT STORM DRAINAGE MAINTENANCE ACCESS STRUCTURE WITHOUT WRITTEN PERMISSION OF ECSD.
3. POTABLE WATER PIPE SHALL NOT PASS THROUGH OR CONTACT SANITARY SEWER MAINTENANCE ACCESS STRUCTURE.
4. MINIMUM TWO (2) FOOT CLEARANCE REQUIRED BETWEEN OUTSIDE OF SLEEVE AND PARALLEL WALL.
5. CONFLICT STRUCTURE TO COMPLY WITH REQUIREMENTS OF CHAPTER 62-555.314 (FAC).

ISSUED: 03/01/1994	DEPARTMENT OF PUBLIC UTILITIES STANDARD DETAIL		REVISED: 06/08/2014
DRAWN: EAM	CONFLICT		DRAWING NO.
APPROVED: XXX	MAINTENANCE ACCESS STRUCTURE		G-14

ALL ELEVATIONS SHOWN ON THESE PLANS ARE BASED ON THE NAVD 88. TO CONVERT ELEVATIONS TO NGVD 29, ADD 1.60'.

Always call 811 two full business days before you dig

Sunshine811.com

FULL SET FOR TAC SUBMITTAL

No.	REVISIONS	DATE	BY

Kimley»Horn

© 2023 KIMLEY-HORN AND ASSOCIATES, INC.
8201 PETERS ROAD, SUITE 2200, PLANTATION, FL 33324
PHONE: 954-535-5100 FAX: 954-739-2247
WWW.KIMLEY-HORN.COM REGISTRY NO. 35106

LICENSED PROFESSIONAL
STEFANO VOLA, P.E.
FL LICENSE NUMBER
74655
DATE: 8/30/23

KHA PROJECT 044241040
DATE AUG 2023
SCALE AS SHOWN
DESIGNED BY SV
DRAWN BY SV
CHECKED BY SV

GENERAL UTILITY DETAILS

PROJECT NO. DCM-19-001190

HOLLYWOOD NEW POLICE HEADQUARTERS
PREPARED FOR
CITY OF HOLLYWOOD
HOLLYWOOD FL

SHEET NUMBER
C-506

This document, together with the concepts and designs presented herein, as an instrument of service, is intended only for the specific purpose and client for which it was prepared. Reuse of and improper reliance on this document without written authorization and adaptation by Kimley-Horn and Associates, Inc. shall be without liability to Kimley-Horn and Associates, Inc.

This document, together with the concepts and designs presented herein, as an instrument of service, is intended only for the specific purpose and client for which it was prepared. Reuse of and improper reliance on this document without written authorization and adaptation by Kimley-Horn and Associates, Inc. shall be without liability to Kimley-Horn and Associates, Inc.

WATER SYSTEM NOTES:

1. NEW OR RELOCATED UNDERGROUND WATER MAINS INCLUDED IN THIS PROJECT THAT WILL CROSS ANY EXISTING OR PROPOSED GRAVITY OR VACUUM-TYPE SANITARY SEWER OR STORM SEWER WILL BE LAID SO THE OUTSIDE OF THE WATER MAIN IS AT LEAST SIX INCHES ABOVE THE OTHER PIPELINE OR AT LEAST 12 INCHES BELOW THE OTHER PIPELINE.
2. NEW OR RELOCATED UNDERGROUND WATER MAINS INCLUDED IN THIS PROJECT THAT WILL CROSS ANY EXISTING OR PROPOSED PRESSURE-TYPE SANITARY SEWER, WASTEWATER OR STORM WATER FORCE MAIN, OR PIPELINE CONVEYING RECLAIMED WATER WILL BE LAID SO THE OUTSIDE OF THE WATER MAIN IS AT LEAST 12 INCHES ABOVE OR BELOW THE OTHER PIPELINE. [FAC 62-555.314(2); EXCEPTIONS ALLOWED UNDER FAC 62-555.314(5)].
3. AT ALL UTILITY CROSSINGS DESCRIBED ABOVE, ONE FULL LENGTH OF WATER MAIN PIPE WILL BE CENTERED ABOVE OR BELOW THE OTHER PIPELINE SO THE WATER MAIN JOINTS WILL BE AS FAR AS POSSIBLE FROM THE OTHER PIPELINE, OR THE PIPES WILL BE ARRANGED SO THAT ALL WATER MAIN JOINTS ARE AT LEAST THREE FEET FROM ALL JOINTS IN VACUUM-TYPE SANITARY SEWERS, STORM SEWERS, STORM WATER FORCE MAINS, OR PIPELINES CONVEYING RECLAIMED WATER REGULATED UNDER PART III OF CHAPTER 62-610, F.A.C., AND AT LEAST SIX FEET FROM ALL JOINTS IN GRAVITY OR PRESSURE-TYPE SANITARY SEWERS, WASTEWATER FORCE MAINS, OR PIPELINES CONVEYING RECLAIMED WATER NOT REGULATED UNDER PART III OF CHAPTER 62-610, F.A.C. [FAC 62-555.314(2); EXCEPTIONS ALLOWED UNDER FAC 62-555.314(5)].
4. NEW UNDERGROUND WATER MAINS INCLUDED IN THIS PROJECT TO BE DUCTILE IRON PIPE (D.I.P.) WHEN CROSSING BELOW SANITARY SEWER MAINS.
5. POLYETHYLENE ENCASEMENT MATERIAL SHALL BE USED TO ENCASE ALL BURIED DUCTILE IRON PIPE, FITTINGS, VALVES, RODS, AND APPURTENANCES IN ACCORDANCE WITH AWWA C105, METHOD A. THE POLYETHYLENE TUBING SHALL BE CUT TWO FEET LONGER THAN THE PIPE SECTION AND SHALL OVERLAP THE ENDS OF THE PIPE BY ONE FOOT. THE POLYETHYLENE TUBING SHALL BE GATHERED AND LAPPED TO PROVIDE A SNUG FIT AND SHALL BE SECURED AT QUARTER POINTS WITH POLYETHYLENE TAPE. EACH END OF THE POLYETHYLENE TUBING SHALL BE SECURED WITH A WRAP OF POLYETHYLENE TAPE.
6. THE POLYETHYLENE TUBING SHALL PREVENT CONTACT BETWEEN THE PIPE AND BEDDING MATERIAL, BUT IS NOT INTENDED TO BE A COMPLETELY AIRTIGHT AND WATERTIGHT ENCLOSURE. DAMAGED POLYETHYLENE TUBING SHALL BE REPAIRED IN A WORKMANLIKE MANNER USING POLYETHYLENE TAPE, OR THE DAMAGED SECTION SHALL BE REPLACED. POLY WRAP WILL NOT BE PAID FOR AS A SEPARATE BID ITEM. IT SHALL BE CONSIDERED TO BE A PART OF THE PRICE BID FOR WATER MAINS.
7. FIRE HYDRANT BARRELS SHALL BE ENCASED IN POLY WRAP UP TO THE GROUND SURFACE AND THE WEEP HOLES SHALL NOT BE COVERED BY THE POLY WRAP.
8. GATE VALVES FOR USE WITH PIPE LESS THAN THREE INCHES (3") IN DIAMETER SHALL BE RATED FOR TWO HUNDRED (200) PSI WORKING PRESSURE, NON-SHOCK, BLOCK PATTERN, SCREWED BONNET, NON-RISING STEM, BRASS BODY, AND SOLID WEDGE. THEY SHALL BE STANDARD THREADED FOR PVC PIPE AND HAVE A MALLEABLE IRON HANDWHEEL. GATE VALVES 3" THROUGH 16" IN DIAMETER SHALL BE RESILIENT SEAT AND BIDIRECTIONAL FLOW ONLY. VALVES FOR SPECIAL APPLICATIONS WILL REQUIRE CITY UTILITY APPROVAL.
9. VALVE BOXES AND COVERS FOR ALL SIZE VALVES SHALL BE OF CAST IRON CONSTRUCTION AND ADJUSTABLE SCREW-ON TYPE. THE LID SHALL HAVE CAST IN THE METAL THE WORD "WATER" FOR THE WATER LINES. ALL VALVE BOXES SHALL BE SIX INCH (6") NOMINAL DIAMETER AND SHALL BE SUITABLE FOR DEPTHS OF THE PARTICULAR VALVE. THE STEM OF THE BURIED VALVE SHALL BE WITHIN TWENTY-FOUR INCHES (24") OF THE FINISHED GRADE UNLESS OTHERWISE APPROVED BY THE CITY.
10. ALL WATER MAIN INSTALLATIONS SHALL COMPLY WITH THE COLOR CODING REQUIREMENTS OF CHAPTER 62-555.320 F.A.C.

ISSUED: 03/01/1994	DEPARTMENT OF PUBLIC UTILITIES STANDARD DETAIL		REVISED: 06/08/2014
DRAWN: EAM	WATER SYSTEM NOTES		DRAWING NO.
APPROVED: XXX			W-01

WATER SYSTEM NOTES (CONTINUED):

11. ALL WATER MAIN INSTALLATIONS SHALL COMPLY WITH THE COLOR CODING REQUIREMENTS OF CHAPTER 62-555.320 F.A.C.
12. ALL PVC PIPE SHALL CONFORM TO THE REQUIREMENTS OF ANSI/AWWA C900 LATEST REVISION AND CLASS DR 18. ALL DIP WATER MAINS SHALL BE DUCTILE IRON PRESSURE CLASS 350, WITH WALL THICKNESS COMPLYING WITH CLASS 52. ALL DUCTILE IRON PIPE SHALL CONFORM TO THE REQUIREMENTS OF ANSI/AWWA C151/A21.51-02 AND BE CEMENT LINED AND SEAL COATED PER ANSI/AWWA C104/A21.4-03.
13. FITTINGS SHALL BE DUCTILE IRON, MEETING ANSI/AWWA C153/A21.53-00 SPECIFICATIONS, WITH 350 PSI MINIMUM WORKING PRESSURE. FITTINGS MUST BE CEMENT LINED AND SEAL COATED PER ANSI/AWWA C104/A21.4-03. ALL DUCTILE IRON PIPE AND FITTINGS MUST BE MANUFACTURED IN THE UNITED STATES OF AMERICA.
14. ALL DUCTILE IRON PIPE TO BE MECHANICAL JOINTS, WRAPPED IN POLY. ADEQUATE PROTECTIVE MEASURES AGAINST CORROSION SHALL BE USED AS DETERMINED BY DESIGN.
15. PAVEMENT RESTORATION SHALL BE CARRIED OUT IN ACCORDANCE WITH THE REQUIREMENTS OF THE CITY.
16. ALL TRENCHING, PIPE LAYING, BACKFILL, PRESSURE TESTING, AND DISINFECTING MUST COMPLY WITH THE CITY OF HOLLYWOOD SPECIFICATIONS.
17. THE MINIMUM DEPTH OF COVER OVER WATER MAINS IS 30" (DIP) OR 36" (PVC).
18. MINIMUM HORIZONTAL SEPARATION BETWEEN STORM STRUCTURES AND WATER MAINS SHALL BE 3'.
19. MAXIMUM DEFLECTION PER EACH JOINT SHALL BE 50% OF MANUFACTURES RECOMMENDATION (MAXIMUM) WHERE DEFLECTION IS REQUIRED.
20. CONTRACTOR SHALL BE RESPONSIBLE FOR IDENTIFYING CONFLICTS WITH WATER MAINS PLACED AT MINIMUM COVER. IN CASE OF CONFLICT, WATER MAIN SHALL BE LOWERED TO PASS UNDER CONFLICTS WITH 18" MINIMUM VERTICAL SEPARATION. NO ADDITIONAL PAYMENT SHALL BE DUE TO CONTRACTOR FOR LOWERING THE MAIN OR THE ADDITIONAL FITTINGS USED THEREON.
21. PIPE JOINT RESTRAINT SHALL BE PROVIDED BY THE USE OF DUCTILE IRON FOLLOWER GLANDS MANUFACTURED TO ASTM A 536-80. TWIST-OFF NUTS SHALL BE USED TO ENSURE PROPER ACTUATING OF THE RESTRAINING DEVICES. THE MECHANICAL JOINT RESTRAINING DEVICES SHALL HAVE A WORKING PRESSURE OF 250 PSI MINIMUM, WITH A MINIMUM SAFETY FACTOR OF 2:1, AND SHALL BE EBAA IRON INC., MEGALUG OR APPROVED EQUAL. JOINT RESTRAINTS SHALL BE PROVIDED AT A MINIMUM OF THREE JOINTS (60 FEET) FROM ANY FITTING.
22. WHENEVER IT IS NECESSARY, IN THE INTEREST OF SAFETY, TO BRACE THE SIDES OF A TRENCH, THE CONTRACTOR SHALL FURNISH, PUT IN PLACE AND MAINTAIN SUCH SHEETING OR BRACING AS MAY BE NECESSARY TO SUPPORT THE SIDES OF THE EXCAVATION TO ENSURE PERSONNEL SAFETY, AND TO PREVENT MOVEMENT WHICH CAN IN ANY WAY DAMAGE THE WORK OR ENDANGER ADJACENT STRUCTURES. THE CONTRACTOR SHALL BE SOLELY RESPONSIBLE FOR THE SEQUENCE, METHODS AND MEANS OF CONSTRUCTION, AND FOR THE IMPLEMENTATION OF ALL OSHA AND OTHER SAFETY REQUIREMENTS.

ISSUED: 03/01/1994	DEPARTMENT OF PUBLIC UTILITIES STANDARD DETAIL		REVISED: 06/08/2014
DRAWN: EAM	WATER SYSTEM NOTES		DRAWING NO.
APPROVED: XXX			W-02

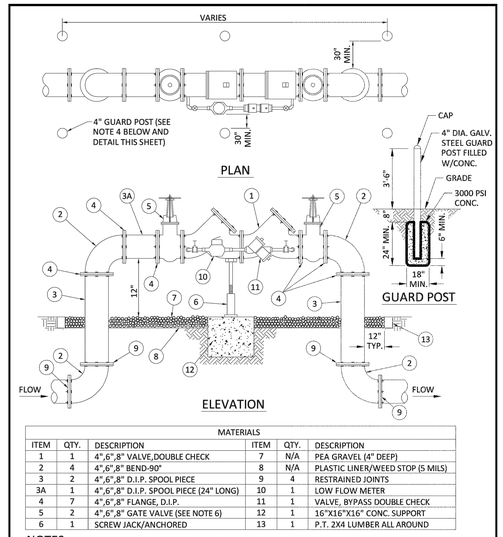

MATERIALS					
ITEM	QTY.	DESCRIPTION	ITEM	QTY.	DESCRIPTION
1	1	4",6",8" VALVE,DOUBLE CHECK	7	N/A	PEA GRAVEL (4" DEEP)
2	4	4",6",8" BEND-90°	8	N/A	PLASTIC LINER/WEED STOP (5 MILS)
3	2	4",6",8" D.I.P. SPOOL PIECE	9	4	RESTRAINED JOINTS
3A	1	4",6",8" D.I.P. SPOOL PIECE (24" LONG)	10	1	LOW FLOW METER
4	7	4",6",8" FLANGE, D.I.P.	11	1	VALVE, BYPASS DOUBLE CHECK
5	2	4",6",8" GATE VALVE (SEE NOTE 6)	12	1	16"X16"X16" CONC. SUPPORT
6	1	SCREW JACK/ANCHORED	13	1	P.T. 2X4 LUMBER ALL AROUND

NOTES:
1. FIELD ADJUST AND CUT ITEM 3 TO THE PROPER LENGTH.
2. ALL PIPING SHALL BE D.I.P. CL 50/52 AS APPLICABLE TO MINIMUM STANDARDS.
3. ALL LOW FLOW METER PIPING SHALL BE BRASS OR COPPER.
4. PROTECTIVE 4" GALV. GUARD POSTS SHALL BE SPACED EVENLY APART AS SHOWN ABOVE OR IN ACCORDANCE WITH INSPECTOR'S DIRECTIONS.
5. MAY USE 45° BENDS (SEE DETAIL W-07.2) WHEN WORKING AREA IS NOT LIMITED, AS DIRECTED BY CITY.
6. GATE VALVES SHALL BE CHAINED AND LOCKED TOGETHER TO PREVENT TAMPERING.

ISSUED: 03/01/1994	DEPARTMENT OF PUBLIC UTILITIES STANDARD DETAIL		REVISED: 06/08/2014
DRAWN: EAM	TYPICAL 4", 6" AND 8" DOUBLE CHECK DETECTOR ASSEMBLY FOR FIRE SPRINKLER SERVICE (90° BENDS)		DRAWING NO.
APPROVED: XXX			W-03

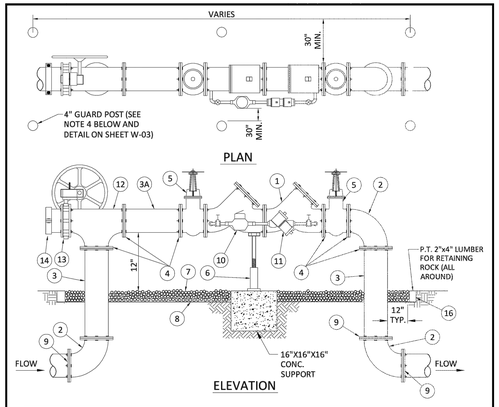

MATERIALS					
ITEM	QTY.	DESCRIPTION	ITEM	QTY.	DESCRIPTION
1	1	4",6",8" VALVE,DOUBLE CHECK	8	N/A	PLASTIC LINER/WEED STOP (5 MILS)
2	4	4",6",8" BEND-90°	9	4	RESTRAINED JOINTS
3	2	4",6",8" D.I.P. SPOOL PIECE	10	1	LOW FLOW METER
3A	1	4",6",8" D.I.P. SPOOL PIECE(24" LONG)	11	1	VALVE, BYPASS DOUBLE CHECK
4	10	4",6",8" FLANGE, D.I.P.	12	1	4", 6", 8" TEE
5	2	4",6",8" GATE VALVE (SEE NOTE 6)	13	1	4", 6" 8" BUTTERFLY VALVE (SUPERVISED CLOSED), CHAINED AND LOCKED
6	1	SCREW JACK/ANCHORED			
7	N/A	PEA GRAVEL (4" DEEP)	14	1	4", 6", 8" CAP

NOTES:
1. FIELD ADJUST AND CUT ITEM 3 TO THE PROPER LENGTH.
2. ALL PIPING SHALL BE D.I.P. CL 50/52 AS APPLICABLE TO MINIMUM STANDARDS.
3. ALL LOW FLOW METER PIPING SHALL BE BRASS OR COPPER.
4. PROTECTIVE 4" GALV. GUARD POSTS SHALL BE SPACED EVENLY APART AS SHOWN ABOVE OR IN ACCORDANCE WITH INSPECTOR'S DIRECTIONS.
5. MAY USE 45° BENDS (SEE DETAIL W-05) WHEN WORKING AREA IS NOT LIMITED, AS DIRECTED BY CITY.
6. GATE VALVES SHALL BE CHAINED AND LOCKED TOGETHER TO PREVENT TAMPERING

ISSUED: 03/01/1994	DEPARTMENT OF PUBLIC UTILITIES STANDARD DETAIL		REVISED: 06/08/2014
DRAWN: EAM	TYPICAL 4", 6" AND 8" DOUBLE CHECK DETECTOR FOR FIRE SPRINKLER SERVICE W/B.V. CONNECTION (90° BENDS)		DRAWING NO.
APPROVED: XXX			W-04

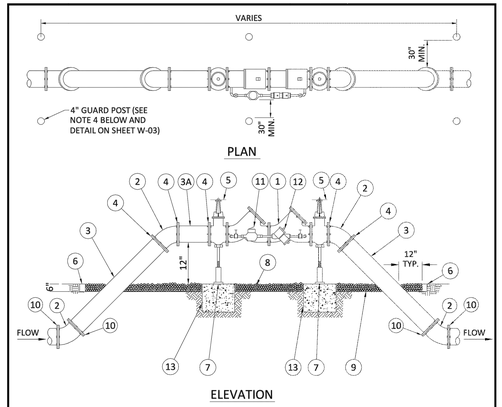

MATERIALS					
ITEM	QTY.	DESCRIPTION	ITEM	QTY.	DESCRIPTION
1	1	4",6",8" VALVE,DOUBLE CHECK	7	2	SCREW JACK/ANCHORED
2	4	4",6",8" BEND-45°	8	N/A	PEA GRAVEL (4" DEEP)
3	2	4",6",8" D.I.P. SPOOL PIECE	9	N/A	PLASTIC LINER/WEED STOP (5 MILS)
3A	1	4",6",8" D.I.P. SPOOL PIECE(24" LONG)	10	4	RESTRAINED JOINTS
4	7	4",6",8" FLANGE, D.I.P.	11	1	LOW FLOW METER
5	2	4",6",8" GATE VALVE (SEE NOTE 6)	12	1	VALVE, BYPASS DOUBLE CHECK
6	2	P.T. 2"x4" LUMBER (ALL AROUND)	13	1	16"x16"x16" CONC. SUPPORT

NOTES:
1. FIELD ADJUST AND CUT ITEM 3 TO THE PROPER LENGTH.
2. ALL PIPING SHALL BE D.I.P. CL 50/52 AS APPLICABLE TO MINIMUM STANDARDS.
3. ALL LOW FLOW METER PIPING SHALL BE BRASS OR COPPER.
4. PROTECTIVE 4" GALV. GUARD POSTS SHALL BE SPACED EVENLY APART AS SHOWN ABOVE OR IN ACCORDANCE WITH INSPECTOR'S DIRECTIONS.
5. MAY USE 90° BENDS (SEE DETAIL W-03) WHEN WORKING AREA IS LIMITED.
6. GATE VALVES SHALL BE CHAINED AND LOCKED TOGETHER TO PREVENT TAMPERING.

ISSUED: 03/01/1994	DEPARTMENT OF PUBLIC UTILITIES STANDARD DETAIL		REVISED: 06/08/2014
DRAWN: EAM	TYPICAL 4", 6" AND 8" DOUBLE CHECK DETECTOR ASSEMBLY FOR FIRE SPRINKLER SERVICE (45° BENDS)		DRAWING NO.
APPROVED: XXX			W-05

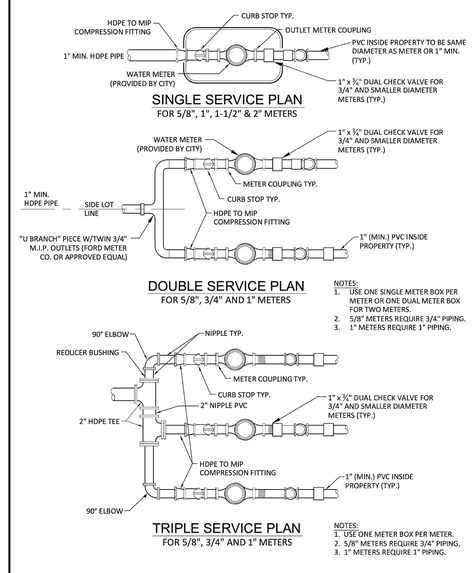

ISSUED: 03/01/1994	DEPARTMENT OF PUBLIC UTILITIES STANDARD DETAIL		REVISED: 06/08/2014
DRAWN: EAM	TYPICAL 5/8", 1", 1-1/2" AND 2" METER INSTALLATION		DRAWING NO.
APPROVED: XXX			W-06

ALL ELEVATIONS SHOWN ON THESE PLANS ARE BASED ON NGVD 88. TO CONVERT TO NGVD 29, ADD 0.

Always call 811 two full business days before you dig

Sunshine811.com

FULL SET FOR TAC SUBMITTAL

HOLLYWOOD NEW POLICE HEADQUARTERS
PREPARED FOR
CITY OF HOLLYWOOD
HOLLYWOOD FL

SHEET NUMBER
C-507

No.	REVISIONS	DATE	BY

Kimley»Horn

© 2023 KIMLEY-HORN AND ASSOCIATES, INC.
8201 PETERS ROAD, SUITE 2200, PLANTATION, FL 33324
PHONE: 954-535-5100 FAX: 954-739-2247
WWW.KIMLEY-HORN.COM REGISTRY NO. 35106

LICENSED PROFESSIONAL
STEFANO VIOLA, P.E.
FL LICENSE NUMBER 74655
DATE: 8/30/23

KHA PROJECT 044241040
DATE: AUG 2023

SCALE	AS SHOWN
DESIGNED BY	SV
DRAWN BY	SV
CHECKED BY	SV

WATER DETAILS

PROJECT NO. DCM-19-001190

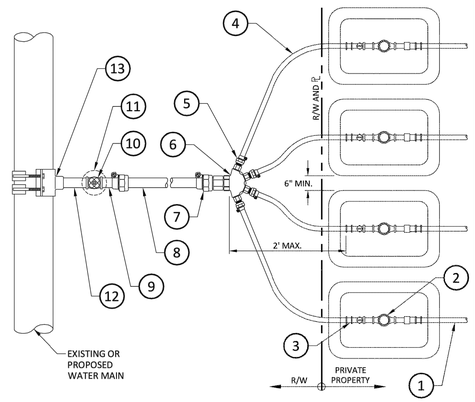

1. PROPERTY OWNER'S SERVICE PIPE
2. ⅝", ¾" OR 1" METER INSTALLATION (REFER TO "SINGLE SERVICE PLAN" ON STANDARD DETAIL W-06) (TYP. FOR 4)
3. COUPLING W/1" COMPRESSION FOR HDPE X ¾" MIP
4. 1" HDPE SERVICE PIPE TO METER (TYP. FOR 4)
5. COUPLING W/1" MIP X 1" COMPRESSION FOR HDPE (TYP. FOR 4)
6. MULTI-SERVICE "Y" W/SINGLE 2" FIP INLET AND (4)-1" FIP OUTLETS
7. COUPLING WITH 2" COMPRESSION FOR HDPE X 2" MIP
8. 2" HDPE WATER SERVICE PIPE
9. COUPLING W/2" BRASS THREAD x 2" COMPRESSION FOR HDPE
10. PROP. 2" GATE VALVE W/2" OPERATING WHEEL
11. PROP. VALVE BOX W/LID AND RISER. FOR UNPAVED AREAS, INSTALL 24"x24"x8" THICK CONC. COLLAR
12. PROPOSED 2" BRASS NIPPLE
13. PROP. DOUBLE STRAP SERVICE SADDLE FOR D.I.P. OR BAND SADDLE FOR PVC

ISSUED: 03/01/1994	DEPARTMENT OF PUBLIC UTILITIES STANDARD DETAIL		REVISED: 06/08/2014
DRAWN: EAM	METER BANK INSTALLATION FOR FOUR ⅝", ¾" AND/OR 1" METERS		DRAWING NO.
APPROVED: XXX			W-06.1

WATER METER SERVICE NOTES:

1. SUCCESSIVE TAPS INTO THE WATER MAIN SHALL BE SPACED NOT LESS THAN 18" ON CENTER.
2. P.E. TUBING SHALL BE IN ACCORDANCE WITH THE LATEST EDITION OF AWWA STANDARD C901, "POLYETHYLENE (PE) PRESSURE PIPE AND TUBING, 1/2 IN. (13mm) THROUGH 3 IN. (76 mm), FOR WATER SERVICE".
3. MINIMUM SERVICE PIPE DIAMETER SHALL BE 1" FOR SINGLE OR DUAL ⅝" OR 1" DIAMETER METERS.
4. MINIMUM SERVICE PIPE DIAMETER SHALL BE 2" FOR 1-½" OR 2" DIAMETER METERS.
5. FOR METER DIAMETERS LARGER THAN 2", THE MINIMUM SERVICE PIPE DIAMETER SHALL BE THE SAME AS THE METER DIAMETER.
6. APPROVED TYPE COPPER TUBING MAY BE USED AT THE CITY'S DISCRETION.
7. FOR NEW METER INSTALLATIONS, ALL SADDLES, VALVES, PIPING, FITTINGS,CURB STOPS, METER VALVES, METER COUPLINGS, METER VAULTS AND COVERS SHALL BE FURNISHED AND INSTALLED BY THE CONTRACTOR.
8. THE WATER METERS WILL BE PROVIDED BY THE CITY OF HOLLYWOOD AND INSTALLED BY THE CONTRACTOR.
9. FOR METER RELOCATIONS, ALL SADDLES, VALVES, PIPING, FITTINGS, CURB STOPS, METER VALVES, METER COUPLINGS, METER VAULTS AND COVERS SHALL BE FURNISHED AND INSTALLED BY THE CONTRACTOR.
10. THE EXISTING WATER METER TO BE RELOCATED AND INSTALLED BY CONTRACTOR.
11. FOR EXISTING METERS ABUTTING THE RIGHT-OF-WAY THAT ARE BEING DISCONNECTED FROM EXISTING MAINS AND RECONNECTED TO NEW MAINS, THE CONTRACTOR SHALL:
    a. CUT AND PLUG THE EXISTING SERVICE LINE AT THE MAIN AND AT THE METER, AND REMOVE THE EXISTING BALL VALVE CURB STOP.
    b. FURNISH AND INSTALL SERVICE SADDLE, CORPORATION STOP OR SERVICE VALVE AND VALVE BOX, PIPING AND FITTINGS UP TO AND INCLUDING THE BALL VALVE CURB STOP.
12. THE ELEVATION AT THE TOP OF THE METER BOX SHALL MATCH THE ELEVATION OF THE BACK OF SIDEWALK.
13. AS PART OF THE SERVICE INSTALLATION, THE CONTRACTOR SHALL RESTORE THE RIGHT-OF-WAY TO MATCH EXISTING CONDITIONS, INCLUDING ROADWAY PAVEMENT, PAVEMENT MARKINGS AND RPMs, CONCRETE CURBS, SIDEWALKS, RAMPS (INCLUDING DETECTABLE WARNING SURFACE), SODDING, AND ALL OTHER IMPROVEMENTS REMOVED OR DAMAGED DURING THE SERVICE INSTALLATION.
14. FOR UNPAVED AREAS, THE MINIMUM GROUND COVER ACCEPTED BY THE CITY IS SODDING.

ISSUED: 03/01/1994	DEPARTMENT OF PUBLIC UTILITIES STANDARD DETAIL		REVISED: 06/08/2014
DRAWN: EAM	WATER METER SERVICE NOTES FOR 5/8" THROUGH 2" METERS		DRAWING NO.
APPROVED: XXX			W-O7

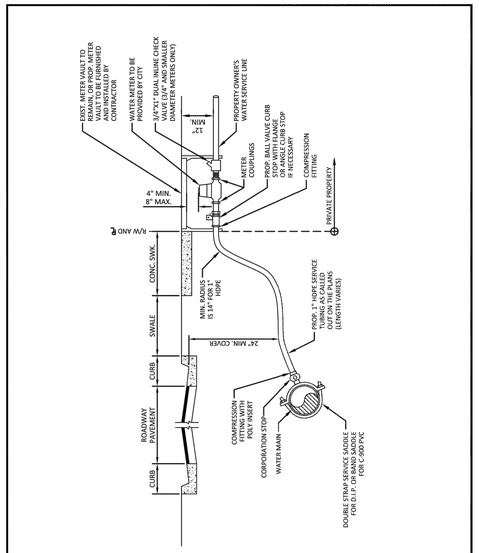

ISSUED: 03/01/1994	DEPARTMENT OF PUBLIC UTILITIES STANDARD DETAIL		REVISED: 06/08/2014
DRAWN: EAM	TYPICAL 1" HDPE WATER SERVICE FOR SINGLE/DUAL 5/8" TO 1" METERS		DRAWING NO.
APPROVED: XXX			W-O8

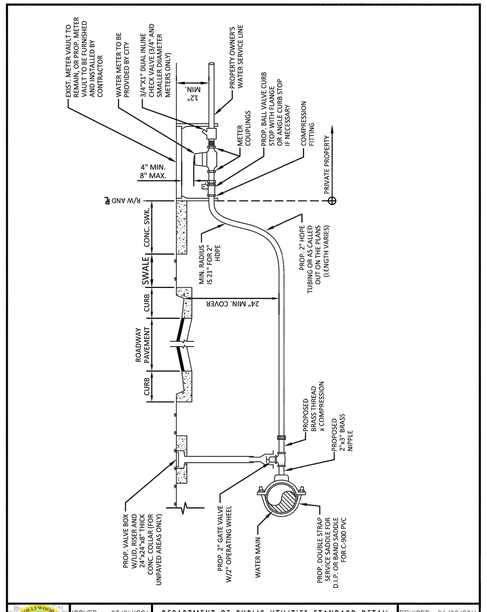

ISSUED: 03/01/1994	DEPARTMENT OF PUBLIC UTILITIES STANDARD DETAIL		REVISED: 06/08/2014
DRAWN: EAM	TYPICAL 2-INCH HDPE WATER SERVICE FOR SINGLE/DUAL 5/8" TO 1" METERS, AND ANY SINGLE 1-1/2" TO 2" METERS		DRAWING NO.
APPROVED: XXX			W-09

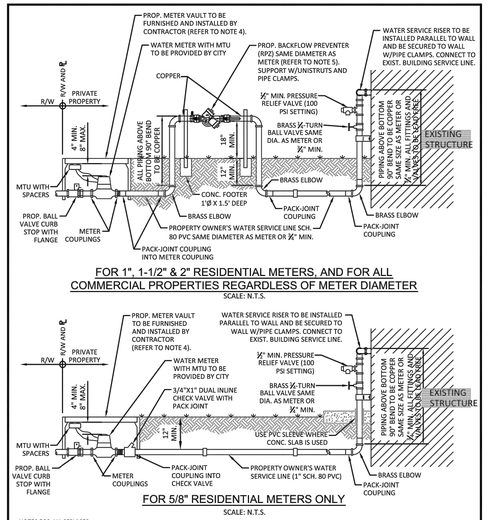

FOR 1", 1-1/2" & 2" RESIDENTIAL METERS, AND FOR ALL COMMERCIAL PROPERTIES REGARDLESS OF METER DIAMETER

SCALE: N.T.S.

FOR 5/8" RESIDENTIAL METERS ONLY

SCALE: N.T.S.

NOTES FOR ALL SERVICES:

1. IF EXISTING HOSE BIB IS REMOVED, DAMAGED, OR NO HOSE BIB EXISTS, ONE MUST BE INSTALLED.
2. THREADED PVC FITTINGS (MALE OR FEMALE) NOT ALLOWED. ALL TRANSITIONS FROM PVC TO METAL PIPING/FITTINGS SHALL USE COMPRESSION PACK-JOINT COUPLINGS. THIS INCLUDES PVC CONNECTIONS TO INLINE CHECK VALVE AND BACKFLOW PREVENTER.
3. PIPE CLAMPS FOR ATTACHING WATER SERVICE RISER TO WALL SHALL BE HOT-DIPPED GALVANIZED, WITH ISOLATION MATERIAL BETWEEN THE PIPE AND GALVANIZED METAL.
4. IF EXISTING CONCRETE METER VAULT IS IN ACCEPTABLE CONDITION (AS DETERMINED BY ECSD) IT MAY BE RE-USED.
5. IF EXISTING BACKFLOW PREVENTER IS DETERMINED TO BE IN ACCEPTABLE CONDITION IT MAY BE RE-USED PROVIDED IT IS RE-CERTIFIED.
6. ALL PRIVATE SERVICE LINE INSTALLATIONS SHALL COMPLY WITH THE LATEST REVISION OF THE FLORIDA BUILDING CODE.

ISSUED: 03/01/1994	DEPARTMENT OF PUBLIC UTILITIES STANDARD DETAIL		REVISED: 11/08/2014
DRAWN: EAM	TYPICAL WATER SERVICE FROM METER TO STRUCTURE FOR 5/8" THROUGH 2" METERS		DRAWING NO.
APPROVED: XXX			W-10

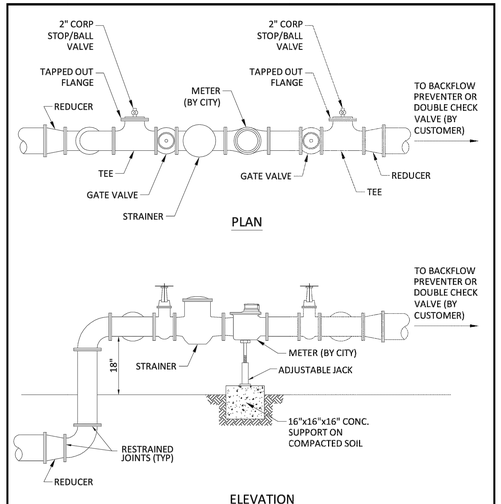

NOTES:

1. THE WATER METER AND STRAINER IS PROVIDED BY THE CITY OF HOLLYWOOD.
2. THE CITY'S RESPONSIBILITY ENDS AT THE REDUCER PRECEDING THE BACKFLOW PREVENTER.
3. TAPPED OUT FLANGE SHOULD MATCH SIZE OF TEE AND STANDARD 2" CORP STOP OR BALL VALVE.

ISSUED: 03/01/1994	DEPARTMENT OF PUBLIC UTILITIES STANDARD DETAIL		REVISED: 06/08/2014
DRAWN: EAM	TYPICAL METER 3" DIAMETER AND LARGER		DRAWING NO.
APPROVED: XXX			W-11

ALL ELEVATIONS SHOWN ON THESE PLANS ARE BASED ON NAVD 88. TO CONVERT ELEVATIONS TO NGVD 29, ADD

Always call 811 two full business days before you dig

Sunshine811.com

FULL SET FOR TAC SUBMITTAL

HOLLYWOOD NEW POLICE HEADQUARTERS
PREPARED FOR
CITY OF HOLLYWOOD
HOLLYWOOD FL

SHEET NUMBER
C-508

No.	REVISIONS	DATE	BY

Kimley»Horn

© 2023 KIMLEY-HORN AND ASSOCIATES, INC.
8201 PETERS ROAD, SUITE 2200, PLANTATION, FL 33324
PHONE: 954-535-5100 FAX: 954-739-2247
WWW.KIMLEY-HORN.COM REGISTRY NO. 35106

LICENSED PROFESSIONAL
STEFANO VIOLA, P.E.
FL LICENSE NUMBER 74655
DATE: 8/30/23

KHA PROJECT 044241040
DATE AUG 2023
SCALE AS SHOWN
DESIGNED BY SV
DRAWN BY SV
CHECKED BY SV

WATER DETAILS

PROJECT NO. DCM-19-001190

This document, together with the concepts and designs presented herein, as an instrument of service, is intended only for the specific purpose and client for which it was prepared. Reuse of and improper reliance on this document without written authorization and adaptation by Kimley-Horn and Associates, Inc. shall be without liability to Kimley-Horn and Associates, Inc.

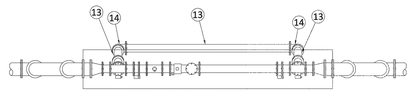

PLAN VIEW

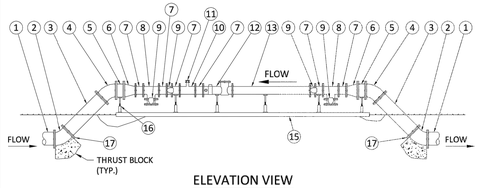

ELEVATION VIEW

MATERIALS

ITEM	QTY.	DESCRIPTION	ITEM	QTY.	DESCRIPTION
1		20" D.I. PIPE	9	4	12" BUTTERFLY VALVE (FLG. x FLG.)
2	2	20" D.I.P. 45° BEND, M.J. x M.J., RESTRAINED	10	1	12" x 4" TEE (FLG. x FLG.)
3	2	20" D.I. SPOOL PIECE (P.E. x FLG.)	11	1	4" BUTTERFLY VALVE (FLG. x FLG.)
4	2	20" D.I.P. 45° BEND (FLG. x FLG.)	12	1	12" TURBINE METER
5	2	20" D.I. SPOOL PIECE (12" LONG) (FLG. x FLG.)	13	3	12" D.I. SPOOL PIECE (FLG. x FLG.)
6	2	20"x12" D.I.P. REDUCER (FLG. x FLG.)	14	2	12" D.I.P. 90° BEND (FLG. x FLG.)
7	6	12" D.I. SPOOL PIECE (12" LONG) (FLG. x FLG.)	15	1	3'W x 8" THICK CONC. SLAB W/#4 @ 12" O.C. E.W.
8	2	12" x 12" D.I.P. TEE (FLG. x FLG.) ROTATED DOWN 45°	16	6	SCREW JACK / ANCHORED

NOTES:

1. FIELD ADJUST AND CUT ITEM 3 TO THE PROPER LENGTH.
2. ALL PIPING SHALL BE D.I.P. CL 50/52 AS APPLICABLE TO MINIMUM STANDARDS.
3. USE 90° BENDS WHEN WORKING AREA IS LIMITED.
4. ADJUSTABLE PIPE SADDLE SUPPORTS SHALL BE SIZED TO FIT CURVATURE OF PIPE, WITH GALVANIZED STEEL PIPE AND FLOOR FLANGE. ATTACH FLOOR FLANGE TO CONCRETE SLAB WITH GALVANIZED EXPANSION BOLTS.

ISSUED: 03/01/1994	DEPARTMENT OF PUBLIC UTILITIES STANDARD DETAIL	REVISED: 06/08/2014
DRAWN: EAM	12" CLASS II TURBINE METER ASSEMBLY FOR 20" WATER MAIN	DRAWING NO.
APPROVED: XXX		W-12

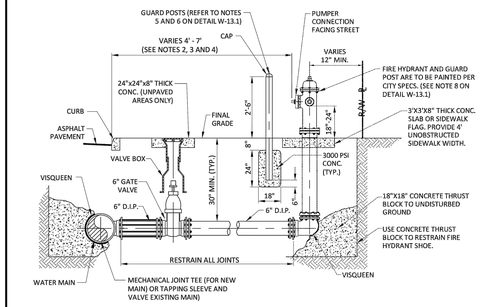

ELEVATION

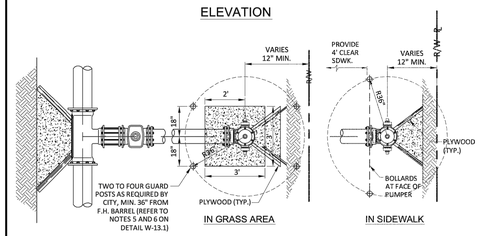

PLAN VIEW

ISSUED: 03/01/1994	DEPARTMENT OF PUBLIC UTILITIES STANDARD DETAIL	REVISED: 06/08/2014
DRAWN: EAM	TYPICAL FIRE HYDRANT INSTALLATION	DRAWING NO.
APPROVED: XXX		W-13

NOTES:

1. IN ALL CASES, PROVIDE 4' UNOBSTRUCTED SIDEWALK CLEAR OF THE FIRE HYDRANT AND BOLLARDS.
2. FIRE HYDRANTS SHALL BE LOCATED BETWEEN 4' AND 7' FROM THE FACE OF CURB.
3. FIRE HYDRANTS SHALL NOT BE LOCATED WITHIN A RADIUS OR WITHIN FDOT CLEAR DRIVING ZONE.
4. WITHIN FDOT R/W, WHERE SPACE IS RESTRICTED THE FIRE HYDRANT MAY BE LOCATED 2' FROM THE FACE OF THE CURB AS LONG AS THERE IS A MINIMUM 4' UNOBSTRUCTED SIDEWALK BEHIND THE HYDRANT, AND THE HYDRANT BASE IS 4" OR LESS FROM GRADE IN ACCORDANCE WITH F.D.O.T. INDEX 700.
5. GUARD POSTS SHALL NOT BE ALLOWED WITHIN FDOT R/W.
6. OTHER THAN FDOT R/W, GUARD POSTS SHALL BE INSTALLED AS REQUIRED FOR SAFETY OR AS APPROVED BY THE DEPT. OF PUBLIC UTILITIES. IN SIDEWALK, LOCATE GUARD POSTS AT THE FACE OF THE PUMPER AND 2'-6' LEFT/RIGHT OF ℄ OF THE FIRE HYDRANT.EXTRA POSTS MAY BE REQUIRED IN INDUSTRIAL AND CONGESTED TRAFFIC AREAS. (4 POSTS MAX.)
7. FIRE HYDRANT CONCRETE SLAB AND CONCRETE GUARD POST FOOTINGS SHALL BE DIFFERENT POURS.
8. THE FIRE HYDRANT BONNET, OPERATING NUT, HOLD-DOWN NUT, PUMPER CAP AND HOSE CAPS SHALL BE PAINTED GREEN, AND THE HYDRANT UPPER BARREL SHALL BE PAINTED SILVER IN ACCORDANCE WITH CITY SPECIFICATIONS.

ISSUED: 03/01/1994	DEPARTMENT OF PUBLIC UTILITIES STANDARD DETAIL	REVISED: 06/08/2014
DRAWN: EAM	TYPICAL FIRE HYDRANT NOTES	DRAWING NO.
APPROVED: XXX		W-13.1

WATER MAIN TESTING AND DISINFECTION NOTES:

1. NO CONNECTIONS TO THE EXISTING LINES SHALL BE MADE UNTIL THE PRESSURE AND BACTERIOLOGICAL TESTS HAVE BEEN PERFORMED ON THE PROPOSED WATER MAINS AND THE SYSTEM HAS BEEN APPROVED BY THE CITY OF HOLLYWOOD AND THE BROWARD COUNTY HEALTH DEPARTMENT.
2. THE PRESSURE TEST SHALL BE PERFORMED FOR 2 HOURS AT A CONSTANT PRESSURE OF 150 PSI AND IN ACCORDANCE WITH RULE 62-555.330 (FAC) C600 AWWA LATEST REVISION, EXCEPT AS OTHERWISE SPECIFIED HEREIN AND IN SPECIFICATION SECTION 15995, "PIPELINE TESTING AND DISINFECTION". PRESSURE TEST SHALL BE WITNESSED BY THE CITY OF HOLLYWOOD. THE ALLOWABLE LEAKAGE SHALL BE LESS THAN THE NUMBER OF GALLONS PER HOUR AS DETERMINED BY THE FORMULA:

$$L = \frac{S \times D \times \sqrt{P}}{148{,}000}$$

L = THE ALLOWABLE LEAKAGE IN GALLONS PER HOUR.
S = THE LENGTH OF PIPE BEING TESTED.
D = THE NOMINAL DIAMETER OF THE PIPE BEING TESTED.
P = THE AVERAGE TEST PRESSURE IN POUNDS PER SQUARE INCH.

3. THE COMPLETE LENGTH OF THE PROPOSED WATER MAIN SHALL BE TESTED, IN LENGTHS NOT TO EXCEED 2,000 FEET PER TEST.
4. PROPOSED WATER MAINS SHALL BE DISINFECTED IN ACCORDANCE WITH THE LATEST EDITION OF ANSI/AWWA STANDARD C651 AND BACTERIOLOGICAL TESTED FOR TWO CONSECUTIVE DAYS IN ACCORDANCE WITH SPECIFICATION SECTION 15995, "PIPELINE TESTING AND DISINFECTION".
5. BACTERIOLOGICAL TESTS SHALL BE REQUESTED AND PAID FOR BY THE CONTRACTOR.
6. THE CONTRACTOR SHALL DIRECTLY HIRE A TESTING LABORATORY CERTIFIED BY THE FLORIDA DEPARTMENT OF HEALTH IN ORDER TO COLLECT AND TEST WATER SAMPLES FROM THE WATER DISTRIBUTION SYSTEM TO BE PLACED INTO SERVICE. SAMPLE COLLECTION AND BACTERIOLOGICAL ANALYSES SHALL BE PERFORMED IN ACCORDANCE WITH RULES 62-555.315(6), 62-555.340 AND 62-555.330 (FAC), AS WELL AS ALL REQUIREMENTS OF THE BROWARD COUNTY HEALTH DEPARTMENT PERMIT.
7. THE WATER DISTRIBUTION SYSTEM SHALL NOT BE CONSIDERED COMPLETE AND READY FOR FINAL INSPECTION UNTIL SUCCESSFUL TEST RESULTS ARE OBTAINED FOR ALL TESTS DESCRIBED ABOVE.

ISSUED: 03/01/1994	DEPARTMENT OF PUBLIC UTILITIES STANDARD DETAIL	REVISED: 06/08/2014
DRAWN: EAM	WATER MAIN TESTING AND DISINFECTION NOTES	DRAWING NO.
APPROVED: XXX		W-14

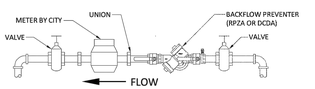

FILLING ASSEMBLY FITTINGS AND EQUIPMENT SHALL BE 2" MAX.

DETAIL 'A'

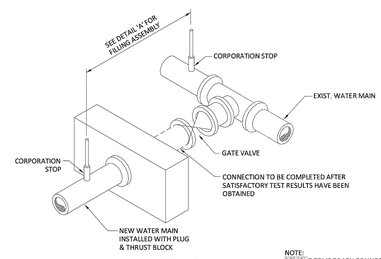

METHOD ``A''

NOTE:
REMOVE TEMPORARY CONNECTION AT CORPORATION STOP ON NEW MAIN AFTER FILLING & FLUSHING HAS BEEN COMPLETED.

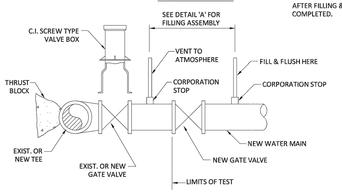

METHOD ``B''

ISSUED: 03/01/1994	DEPARTMENT OF PUBLIC UTILITIES STANDARD DETAIL	REVISED: 06/08/2014
DRAWN: EAM	FILLING AND FLUSHING DETAILS	DRAWING NO.
APPROVED: XXX		W-15

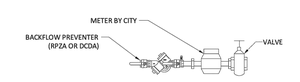

FILLING ASSEMBLY FITTINGS AND EQUIPMENT SHALL BE 2" MAX.

DETAIL 'A'

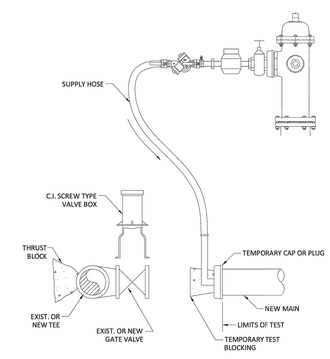

NOTES:
1. HOSE MUST BE REMOVED DURING THE HYDROSTATIC PRESSURE TEST.
2. REMOVE TEMPORARY CONNECTION ON NEW MAIN AFTER FILLING & FLUSHING HAS BEEN COMPLETED.

ISSUED: 03/01/1994	DEPARTMENT OF PUBLIC UTILITIES STANDARD DETAIL	REVISED: 06/08/2014
DRAWN: EAM	CROSS CONNECTION FILLING AND FLUSHING DETAILS	DRAWING NO.
APPROVED: XXX		W-15.1

ALL ELEVATIONS SHOWN ON THESE PLANS ARE
BASED ON NAVD 88. TO CONVERT
TO NGVD 29, ADD 0.8

Always call 811 two full business days before you dig

Sunshine811.com

FULL SET FOR TAC SUBMITTAL

No.	REVISIONS	DATE	BY

Kimley»Horn

© 2023 KIMLEY-HORN AND ASSOCIATES, INC.
8201 PETERS ROAD, SUITE 2200, PLANTATION, FL 33324
PHONE: 954-535-5100 FAX: 954-739-2247
WWW.KIMLEY-HORN.COM REGISTRY NO. 35106

LICENSED PROFESSIONAL
STEFANO VIOLA, P.E.
FL LICENSE NUMBER 74655
DATE: 8/30/23

KHA PROJECT 044241040
DATE: AUG 2023
SCALE AS SHOWN
DESIGNED BY SV
DRAWN BY SV
CHECKED BY SV

WATER DETAILS

PROJECT NO. DCM-19-001190

HOLLYWOOD NEW POLICE HEADQUARTERS
PREPARED FOR
CITY OF HOLLYWOOD
HOLLYWOOD FL

SHEET NUMBER
C-509

This document, together with the concepts and designs presented herein, as an instrument of service, is intended only for the specific purpose and client for which it was prepared. Reuse of and improper reliance on this document without written authorization and adaptation by Kimley-Horn and Associates, Inc. shall be without liability to Kimley-Horn and Associates, Inc.

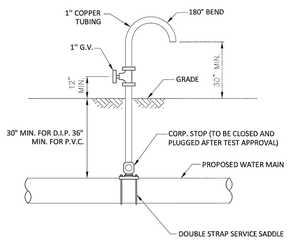

NOTES:

SAMPLING POINT SHALL NOT BE REMOVED UNTIL APPROVAL IS OBTAINED FROM BROWARD COUNTY HEALTH DEPARTMENT.

ISSUED: 03/01/1994	DEPARTMENT OF PUBLIC UTILITIES STANDARD DETAIL		REVISED: 06/08/2014
DRAWN: EAM	SAMPLING POINT DETAIL		DRAWING NO.
APPROVED: XXX			W-16

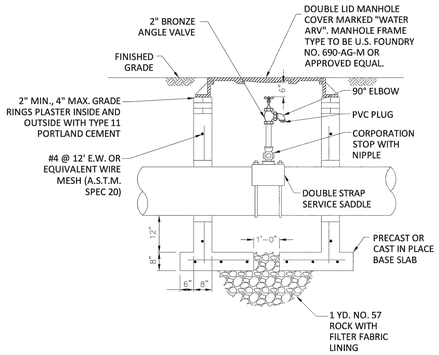

NOTES:

1. ARV ASSEMBLY SHALL BE 1" WHEN INSTALLED ON PIPE 12" IN DIAMETER OR SMALLER. FOR PIPE LARGER THAN 12" IN DIAMETER, USE 2" ARV ASSEMBLY.
2. PRECAST CONCRETE TYPE 4,000 P.S.I.
3. ALL OPENINGS SHALL BE SEALED WITH WATERPROOF, NON-SHRINKING GROUT.
4. LIFT HOLES ARE PERMITTED.
5. ALL PIPE HOLES SHALL BE PRECAST OR CORE-DRILLED.
6. MANHOLE FABRICATION SHALL BE IN ACCORDANCE WITH A.S.T.M. C-478 LATEST STANDARD.
7. PAINT INSIDE & OUTSIDE WITH 2 COATS OF AN APPROVED PROTECTIVE COATING. (MIN. 10 MIL. D.F.T. PER COAT)
8. CONCRETE COLLAR REQUIRED WHEN MANHOLE IS OUTSIDE PAVEMENT.
9. AIR RELEASE VALVE SHALL BE TYPE AND SIZE APPROPRIATE FOR SERVICE INTENDED.
10. CONSTRUCTION JOINT AT BASE IS PERMITTED.
11. THREADED AREAS OF CORPORATION STOP SHALL BE SPIRAL WRAPPED WITH TWO LAYERS OF TEFLON TAPE.
12. IF MANHOLE IS LARGER THAN 4' DIAMETER USE REDUCING GRADE RING OR CONE SECTION.
13. ALL PIPING SHALL BE SCHEDULE 80 PVC.

ISSUED: 03/01/1994	DEPARTMENT OF PUBLIC UTILITIES STANDARD DETAIL		REVISED: 06/08/2014
DRAWN: EAM	MANUAL AIR RELEASE VALVE ASSEMBLY		DRAWING NO.
APPROVED: XXX			W-17

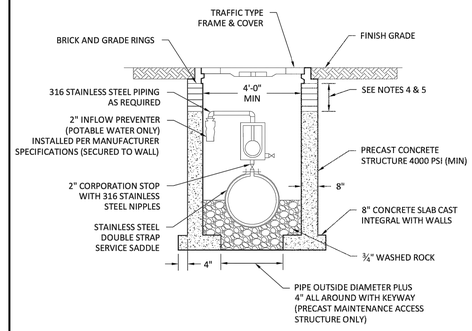

NOTES:

1. LIFT HOLES ARE TO BE SEALED WITH ½" THICK MORTAR INSIDE AND OUTSIDE AFTER INSTALLATION.
2. MAINTENANCE ACCESS STRUCTURE WALLS TO BE COATED INSIDE AND OUTSIDE WITH 16 MIL. THICKNESS COAL TAR EPOXY.
3. ALL OPENINGS SHALL BE SEALED WITH A WATERPROOF, EXPANDING GROUT. ACTUAL LOCATION AND MAINTENANCE ACCESS STRUCTURE FRAME ELEVATION SHALL BE DETERMINED BY ENGINEER BASED ON AS-BUILT SURVEY DATA.
4. THE CHIMNEY AREA SHALL BE MINIMUM OF 4" AND A MAXIMUM OF 12" IN HEIGHT. A MINIMUM OF 3 COURSES AND MAXIMUM OF 4 COURSES OF BRICK SHALL BE INSTALLED.
5. GRADE RINGS ARE AN ACCEPTABLE ALTERATIVE TO BRICK. A MINIMUM OF 3 GRADE RINGS SHALL BE INSTALLED. SET IN TWO STRIPS OF SEALENT/ADHESIVE COMPOUND ON EACH SEALING FACE.
6. SET MAINTENANCE ACCESS STRUCTURE FRAME ON A BED OF PORTLAND CEMENT AND SILICA SAND. BRING MORTAR UP OVER FRAME.

ISSUED: 03/01/1994	DEPARTMENT OF PUBLIC UTILITIES STANDARD DETAIL		REVISED: 06/08/2014
DRAWN: EAM	AIR RELEASE VALVE WITH MAINTENANCE ACCESS STRUCTURE		DRAWING NO.
APPROVED: XXX			W-18

ALL ELEVATIONS SHOWN ON THESE PLANS ARE BASED ON THE NAVD 88. TO CONVERT ELEVATIONS TO NGVD 29, ADD 1.60'.

Always call 811 two full business days before you dig.

Sunshine811.com

FULL SET FOR TAC SUBMITTAL

No.	REVISIONS	DATE	BY

Kimley»Horn

© 2023 KIMLEY-HORN AND ASSOCIATES, INC.
8201 PETERS ROAD, SUITE 2200, PLANTATION, FL 33324
PHONE: 954-535-5100 FAX: 954-739-2247
WWW.KIMLEY-HORN.COM REGISTRY NO. 35106

LICENSED PROFESSIONAL
STEFANO VIOLA, P.E.
FL LICENSE NUMBER 74655
DATE: 8/30/23

KHA PROJECT 044241040
DATE AUG 2023
SCALE AS SHOWN
DESIGNED BY SV
DRAWN BY SV
CHECKED BY SV

WATER DETAILS

PROJECT NO. DCM-19-001190

HOLLYWOOD NEW POLICE HEADQUARTERS
PREPARED FOR
CITY OF HOLLYWOOD
HOLLYWOOD FL

SHEET NUMBER
C-510

This document, together with the concepts and designs presented herein, as an instrument of service, is intended only for the specific purpose and client for which it was prepared. Reuse of and improper reliance on this document without written authorization and adaptation by Kimley-Horn and Associates, Inc. shall be without liability to Kimley-Horn and Associates, Inc.

This document, together with the concepts and designs presented herein, as an instrument of service, is intended only for the specific purpose and client for which it was prepared. Reuse of and improper reliance on this document without written authorization and adaptation by Kimley-Horn and Associates, Inc. shall be without liability to Kimley-Horn and Associates, Inc.

SEWER NOTES:

1. THE MINIMUM DEPTH OF COVER OVER D.I.P. SANITARY SEWER GRAVITY OR FORCE MAINS IS 30". THE MINIMUM DEPTH OF COVER OVER PVC SANITARY SEWER OR FORCE MAINS IS 36".
2. ALL CONNECTIONS TO EXISTING MAINS SHALL BE THE RESPONSIBILITY OF THE CONTRACTOR.
3. LEAKAGE TESTS AND ALIGNMENT (LAMPING) TESTS SHALL BE PERFORMED ON ALL NEW SEWER LINES UP TO THE CONNECTION POINT WITH THE EXISTING SEWER SYSTEM. THESE TESTS SHALL BE REQUESTED AND PAID FOR BY THE CONTRACTOR.
4. LAMPING TESTS SHALL BE PERFORMED ON GRAVITY SEWERS FROM MANHOLE TO MANHOLE UP TO AND INCLUDING THE POINT OF CONNECTION TO THE EXISTING SEWER SYSTEM.
5. LEAKAGE TESTS SHALL BE PERFORMED ON ALL SEGMENTS OF A GRAVITY SEWER SYSTEM, INCLUDING SERVICE LATERALS AND MANHOLES, FOR A CONTINUOUS PERIOD OF NO LESS THAN 2 HOURS. AT THE END OF THE TEST, THE TOTAL MEASURED LEAKAGE SHALL NOT EXCEED 100 GALLONS PER INCH OF PIPE DIAMETER PER MILE PER DAY FOR ANY SECTION OF THE SYSTEM, WITH ZERO ALLOWABLE LEAKAGE FOR LATERALS AND MANHOLES. AN EXFILTRATION OR INFILTRATION TEST SHALL BE PERFORMED WITH A MINIMUM POSITIVE HEAD OF 2 FEET ON THE SECTION BEING TESTED.
6. FORCE MAINS SHALL BE PRESSURE-TESTED IN ACCORDANCE WITH RULE 62-555.330 (FAC). THE PRESSURE TEST SHALL CONSIST OF HOLDING A TEST PRESSURE OF 150 PSI ON THE PIPELINE FOR A CONTINUOUS PERIOD OF 2 HOURS THE MAXIMUM ALLOWABLE LEAKAGE SHALL BE DETERMINED BY THE FOLLOWING FORMULA:

$$L = \frac{S \times D \times \sqrt{P}}{148{,}000}$$

WHERE:
L = ALLOWABLE LEAKAGE FOR SYSTEM IN GALLONS PER HOUR
D = PIPE DIAMETER IN INCHES
S = LENGTH OF LINES IN LINEAL FEET
P = AVERAGE TEST PRESSURE IN PSI

7. CONTRACTOR SHALL BE RESPONSIBLE FOR IDENTYFYING CONFLICTS WITH FORCE MAINS PLACED AT MINIMUM COVER. IN CASE OF CONFLICT, FORCE MAIN SHALL BE LOWERED TO PASS UNDER CONFLICTS WITH 12" MINIMUM SEPARATION FROM WATER MAINS AND 6" MINIMUM SEPARATION FROM OTHER UTILITIES. NO ADDITIONAL PAYMENT SHALL BE DUE TO CONTRACTOR FOR LOWERING THE MAIN OR THE ADDITIONAL FITTINGS USED THEREON.
8. WHENEVER IT IS NECESSARY, IN THE INTEREST OF SAFETY, TO BRACE THE SIDES OF A TRENCH, THE CONTRACTOR SHALL FURNISH, PUT IN PLACE AND MAINTAIN SUCH SHEETING OR BRACING AS MAY BE NECESSARY TO SUPPORT THE SIDES OF THE EXCAVATION TO ENSURE PERSONNEL SAFETY, AND TO PREVENT MOVEMENT WHICH CAN IN ANY WAY DAMAGE THE WORK OR ENDANGER ADJACENT STRUCTURES. THE CONTRACTOR SHALL BE SOLELY RESPONSIBLE FOR THE SEQUENCE, METHODS AND MEANS OF CONSTRUCTION, AND FOR THE IMPLEMENTATION OF ALL OSHA AND OTHER SAFETY REQUIREMENTS.

ISSUED: 03/01/1994	DEPARTMENT OF PUBLIC UTILITIES STANDARD DETAIL	REVISED: 06/08/2014
DRAWN: EAM / APPROVED: XXX	SANITARY SEWER MAIN CONSTRUCTION NOTES	DRAWING NO. S-01

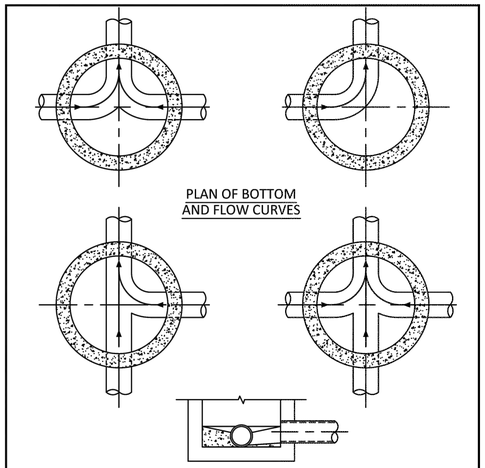

NOTES:

1. INVERT CHANNELS TO BE CONSTRUCTED FOR SMOOTH FLOW WITH NO OBSTRUCTIONS.
2. SPILLWAYS SHALL BE CONSTRUCTED BETWEEN PIPES WITH DIFFERENT INVERT ELEVATIONS PROVIDING SMOOTH FLOWS.
3. CHANNELS FOR FUTURE CONNECTIONS (STUBS) SHALL BE CONSTRUCTED FILLED WITH SAND & COVERED WITH 1" OF MORTAR.
4. WHEN FLOW LINE DEFLECTS MORE THAN 45°, A DROP OF 0.10' IS REQUIRED.

ISSUED: 03/01/1994	DEPARTMENT OF PUBLIC UTILITIES STANDARD DETAIL	REVISED: 06/08/2014
DRAWN: EAM / APPROVED: XXX	MANHOLE FLOW PATTERNS	DRAWING NO. S-02

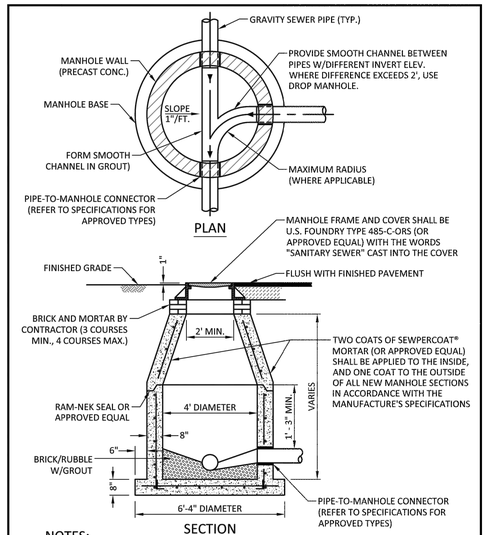

NOTES:

1. SHOP DRAWINGS SIGNED AND SEALED BY A FLORIDA REGISTERED PROFESSIONAL ENGINEER SHOWING ALL DIMENSIONS AND CALCULATIONS, INCLUDING CONCRETE REINFORCEMENT AND BUOYANCY, SHALL BE SUBMITTED TO THE CITY PRIOR TO INSTALLATION.
2. THE BOTTOM SLAB SHALL BE CAST MONOLITHICALLY WITH THE LOWER WALL SECTION.

ISSUED: 03/01/1994	DEPARTMENT OF PUBLIC UTILITIES STANDARD DETAIL	REVISED: 06/08/2014
DRAWN: EAM / APPROVED: XXX	STANDARD PRECAST MANHOLE	DRAWING NO. S-03

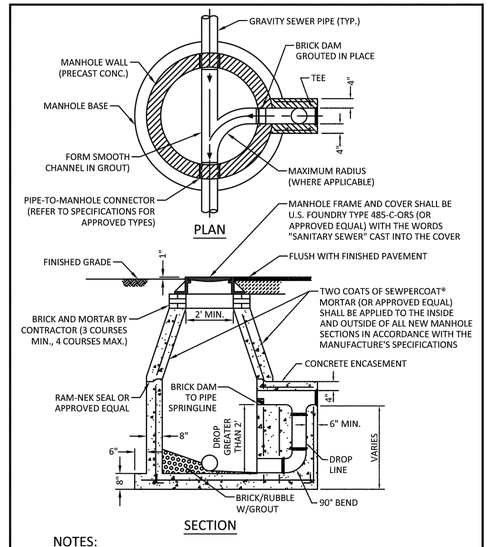

NOTES:

1. SHOP DRAWINGS, SIGNED AND SEALED BY A FLORIDA REGISTERED PROFESSIONAL ENGINEER, SHOWING ALL DIMENSIONS AND CALCULATIONS, INCLUDING CONCRETE REINFORCEMENT, SHALL BE SUBMITTED TO THE CITY PRIOR TO INSTALLATION.
2. THE BOTTOM SLAB SHALL BE CAST MONOLITHICALLY WITH THE LOWER WALL SECTION.

ISSUED: 03/01/1994	DEPARTMENT OF PUBLIC UTILITIES STANDARD DETAIL	REVISED: 06/08/2014
DRAWN: EAM / APPROVED: XXX	DROP MANHOLE	DRAWING NO. S-04

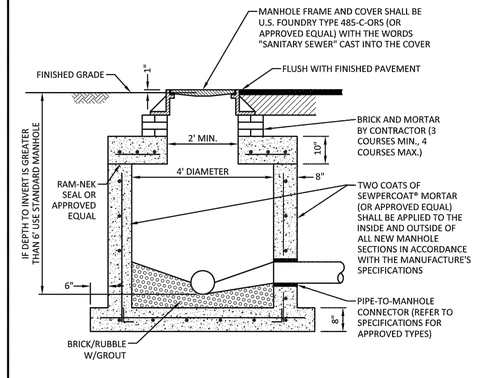

NOTES:

1. SHOP DRAWINGS, SIGNED AND SEALED BY A FLORIDA REGISTERED PROFESSIONAL ENGINEER, SHOWING ALL DIMENSIONS AND CALCULATIONS, INCLUDING CONCRETE REINFORCEMENT, SHALL BE SUBMITTED TO THE CITY PRIOR TO INSTALLATION.
2. THE BOTTOM SLAB SHALL BE CAST MONOLITHICALLY WITH THE LOWER WALL SECTION.

ISSUED: 03/01/1994	DEPARTMENT OF PUBLIC UTILITIES STANDARD DETAIL	REVISED: 06/08/2014
DRAWN: EAM / APPROVED: XXX	SHALLOW MANHOLE	DRAWING NO. S-05

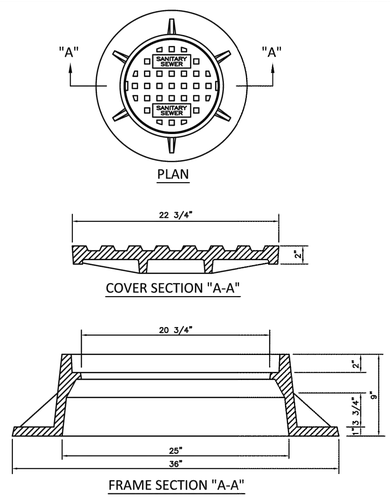

NOTES:

1. LETTERS ON COVER TO BE 3/8" HIGH, 1/4" TO 5/16" THICK AND FLUSH WITH TOP OF COVER.
2. ALL BEARING SURFACES TO BE MACHINED.
3. MINIMUM WEIGHTS: COVER - 160 LBS., TOTAL - 400 LBS.
4. MANHOLE FRAME AND COVER SHALL BE U.S. FOUNDRY 485-C-ORS WITH THE WORDS "SANITARY SEWER" CAST INTO THE COVER.

ISSUED: 03/01/1994	DEPARTMENT OF PUBLIC UTILITIES STANDARD DETAIL	REVISED: 06/08/2014
DRAWN: EAM / APPROVED: XXX	MANHOLE FRAME AND COVER	DRAWING NO. S-06

ALL ELEVATIONS SHOWN ON THESE PLANS ARE BASED ON THE NAVD 88. TO CONVERT ELEVATIONS TO NGVD 29, ADD 1.60'.

Always call 811 two full business days before you dig
Sunshine811.com

FULL SET FOR TAC SUBMITTAL

HOLLYWOOD NEW POLICE HEADQUARTERS
PREPARED FOR
CITY OF HOLLYWOOD
HOLLYWOOD FL

SHEET NUMBER
C-511

No.	REVISIONS	DATE	BY

Kimley»Horn
© 2023 KIMLEY-HORN AND ASSOCIATES, INC.
8201 PETERS ROAD, SUITE 2200, PLANTATION, FL 33324
PHONE: 954-535-5100 FAX: 954-739-2247
WWW.KIMLEY-HORN.COM REGISTRY NO. 35106

LICENSED PROFESSIONAL
STEFANO VIOLA, P.E.
FL LICENSE NUMBER 74655
DATE: 8/30/23

KHA PROJECT 044241040
DATE AUG 2023
SCALE AS SHOWN
DESIGNED BY
DRAWN BY
CHECKED BY

SEWER DETAILS
PROJECT NO. DCM-19-001190

PLAN

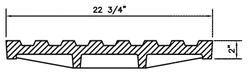

COVER SECTION "A-A"

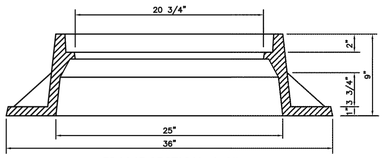

FRAME SECTION "A-A"

NOTES:
1. LETTERS ON COVER TO BE 3/8" HIGH, 1/4" TO 5/16" THICK AND FLUSH WITH TOP OF COVER.
2. ALL BEARING SURFACES TO BE MACHINED.
3. MINIMUM WEIGHTS: COVER - 160 LBS., TOTAL - 400 LBS.
4. MANHOLE FRAME AND COVER SHALL BE U.S. FOUNDRY 485-C-ORS TYPE EL, WITH THE WORDS "SANITARY SEWER" CAST INTO THE COVER.

ISSUED: 03/01/1994	DEPARTMENT OF PUBLIC UTILITIES STANDARD DETAIL		REVISED: 06/08/2014
DRAWN: EAM	MANHOLE FRAME AND COVER		DRAWING NO.
APPROVED: XXX			S-06.1

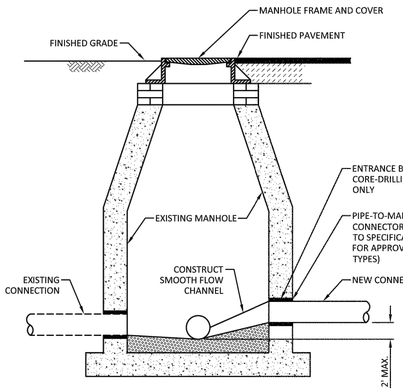

SECTION

ISSUED: 03/01/1994	DEPARTMENT OF PUBLIC UTILITIES STANDARD DETAIL		REVISED: 06/08/2014
DRAWN: EAM	NEW CONNECTION TO EXISTING MANHOLE		DRAWING NO.
APPROVED: XXX			S-07

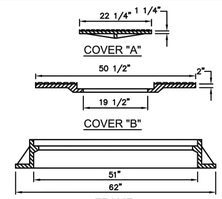

FRAME AND COVER NOTES:
1. AIR RELEASE VALVE MANHOLE COVERS AND FRAMES SHALL BE U.S. FOUNDRY TYPE 1341 RING WITH AG-M COVER, OR APPROVED EQUAL.
2. COVER "A" SHALL HAVE TWO ADJUSTABLE CAMLOCKS FOR SECURING IT TO COVER "B", AND FOUR 1"-DIAMETER VENT HOLES TO PREVENT UPLIFT DURING SUDDEN BURSTS OF AIR.
3. THE COVERS SHALL BE CAST LABELED "AIR RELEASE".
1. PROVIDE H-20 TRAFFIC BEARING FRAME AND COVER WITHIN TRAFFIC LANES OR SWALES ADJACENT TO ROADWAY.
2. ALL BEARING SURFACES TO BE MACHINED
3. MINIMUM WEIGHT 1840 LBS.
4. PICK HOLE COVERS "A" & "B".

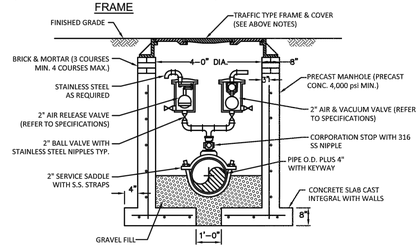

SECTION

NOTES:
1. BRICK MASONRY TO BE STUCCOED WITH 1/2" MORTAR INSIDE AND OUTSIDE.
2. MANHOLE WALLS TO BE COATED INSIDE AND OUTSIDE WITH 16 MIL THICKNESS APPROVED COATING.
3. ALL OPENINGS AROUND PIPE SHALL BE SEALED WITH WATERPROOF, EXPANDING GROUT.
4. ACTUAL LOCATION AND MANHOLE FRAME ELEVATION SHALL BE AS INDICATED ON THE PLANS.
5. SHOP DRAWINGS SHALL BE SUBMITTED BY CONTRACTOR TO THE CITY PRIOR TO INSTALLATION. SHOP DRAWINGS TO SHOW ALL CALCULATIONS AND DIMENSIONS, INCLUDING CONCRETE REINFORCEMENT, AND SHALL BE SIGNED AND SEALED BY A FLORIDA REGISTERED PROFESSIONAL ENGINEER.
6. AIR RELEASE VALVES SHALL BE INSTALLED AT LOCATIONS RECOMMENDED BY SECTION 49.2 OF THE "RECOMMENDED STANDARDS FOR WASTEWATER FACILITIES" (RSWF).

ISSUED: 03/01/1994	DEPARTMENT OF PUBLIC UTILITIES STANDARD DETAIL		REVISED: 06/08/2014
DRAWN: EAM	AUTOMATIC AIR RELEASE VALVE (A.R.V.) AND MANHOLE		DRAWING NO.
APPROVED: XXX			S-08

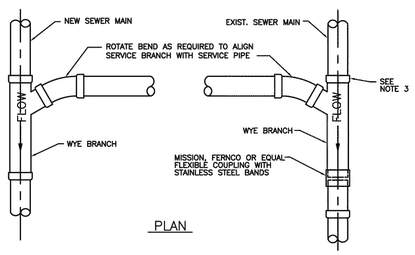

PLAN

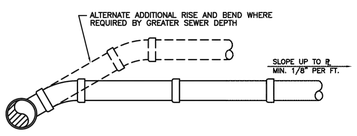

ELEVATION

NOTES:
1. SINGLE SERVICE CONNECTIONS SHALL USE 6" PIPE AND FITTINGS.
2. USE RISER CONNECTIONS WHERE INVERT OF SEWER IS GREATER THAN 7'-0" DEEP.
3. WHERE BELL OF WYE AND SPIGOT OF EXISTING MAIN ARE NOT COMPATIBLE, USE A SECOND FLEXIBLE COUPLING.

ISSUED: 03/01/1994	DEPARTMENT OF PUBLIC UTILITIES STANDARD DETAIL		REVISED: 06/08/2014
DRAWN: EAM	WYE BRANCH CONNECTION		DRAWING NO.
APPROVED: XXX			S-09

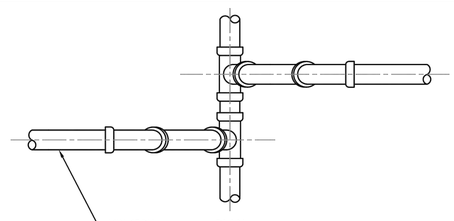

PLAN

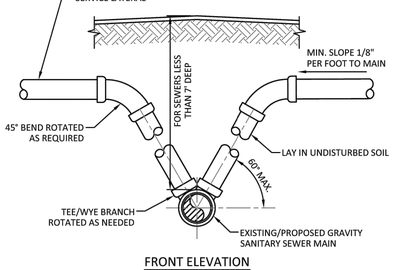

FRONT ELEVATION

NOTES:
1. MODIFIED RISER CONNECTION TO BE USED ONLY WHEN DIRECTED BY THE CITY.
2. NO. 57 ROCK OR ¾" DRAINFIELD LIMEROCK MAY BE USED AS BEDDING OVER UNDISTURBED SOIL WITH PVC PIPE.
3. SINGLE SERVICE CONNECTIONS SHALL USE 6" (MIN.) DIAMETER PIPE AND FITTINGS.

ISSUED: 03/01/1994	DEPARTMENT OF PUBLIC UTILITIES STANDARD DETAIL		REVISED: 06/08/2014
DRAWN: EAM	SANITARY SEWER LATERAL MODIFIED RISER		DRAWING NO.
APPROVED: XXX			S-10

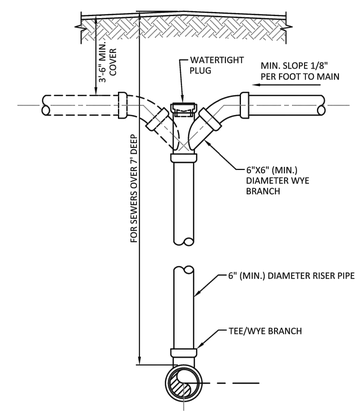

FRONT ELEVATION

NOTES:
1. RISER CONNECTION TO BE USED ONLY WHEN SANITARY SEWER IS MORE THAN 7'-0" DEEP OR WHEN DIRECTED BY THE CITY.
2. NO. 57 ROCK OR ¾" DRAINFIELD LIMEROCK MAY BE USED AS BEDDING OVER UNDISTURBED SOIL WITH PVC PIPE.
3. SINGLE SERVICE CONNECTIONS SHALL USE 6" (MIN.) DIAMETER PIPE AND FITTINGS.

ISSUED: 03/01/1994	DEPARTMENT OF PUBLIC UTILITIES STANDARD DETAIL		REVISED: 06/08/2014
DRAWN: EAM	SANITARY SEWER LATERAL VERTICAL RISER		DRAWING NO.
APPROVED: XXX			S-11

ELEVATIONS SHOWN ON THESE PLANS ARE
ELEVATIONS TO NGVD 29, ADD 1.60"
TO CONVERT
TO NAVD 88.

FULL SET FOR TAC SUBMITTAL

Always call 811 two full business days before you dig
Sunshine811.com

No.	REVISIONS	DATE	BY

Kimley»Horn
© 2023 KIMLEY-HORN AND ASSOCIATES, INC.
8201 PETERS ROAD, SUITE 2200, PLANTATION, FL 33324
PHONE: 954-535-5100 FAX: 954-739-2247
WWW.KIMLEY-HORN.COM REGISTRY NO. 35106

LICENSED PROFESSIONAL
STEFANO VIOLA, P.E.
FL LICENSE NUMBER 74655
DATE: 8/30/23

KHA PROJECT 044241040
DATE AUG 2023
SCALE AS SHOWN
DESIGNED BY SV
DRAWN BY SV
CHECKED BY SV

SEWER DETAILS

PROJECT NO. DCM-19-001190

HOLLYWOOD NEW POLICE HEADQUARTERS
PREPARED FOR
CITY OF HOLLYWOOD
HOLLYWOOD FL

SHEET NUMBER
C-512

This document, together with the concepts and designs presented herein, as an instrument of service, is intended only for the specific purpose and client for which it was prepared. Reuse of and improper reliance on this document without written authorization and adaptation by Kimley-Horn and Associates, Inc. shall be without liability to Kimley-Horn and Associates, Inc.

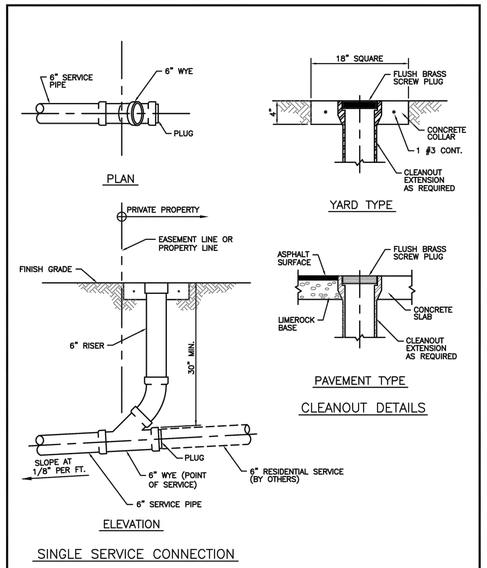

SINGLE SERVICE CONNECTION

ISSUED: 03/01/1994	DEPARTMENT OF PUBLIC UTILITIES STANDARD DETAIL		REVISED: 06/08/2014
DRAWN: EAM	SEWER SERVICE CONNECTION AND CLEANOUT AT PROPERTY LINE		DRAWING NO.
APPROVED: XXX			S-12

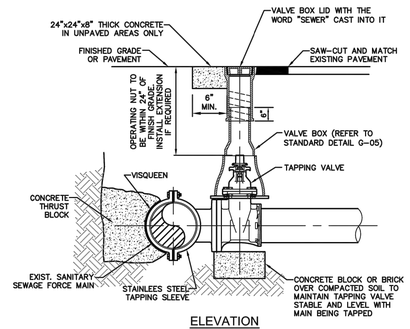

NOTES:

1. REFER TO STANDARD DETAIL GS-06, "TYPICAL TAPPING SLEEVE AND VALVE SETTING"
2. REFER TO STANDARD DETAIL S-14, "PRIVATE FORCE MAIN TIE-IN AT PROPERTY LINE".

ISSUED: 03/01/1994	DEPARTMENT OF PUBLIC UTILITIES STANDARD DETAIL		REVISED: 06/08/2014
DRAWN: EAM	FORCE MAIN CONNECTION		DRAWING NO.
APPROVED: XXX			S-13

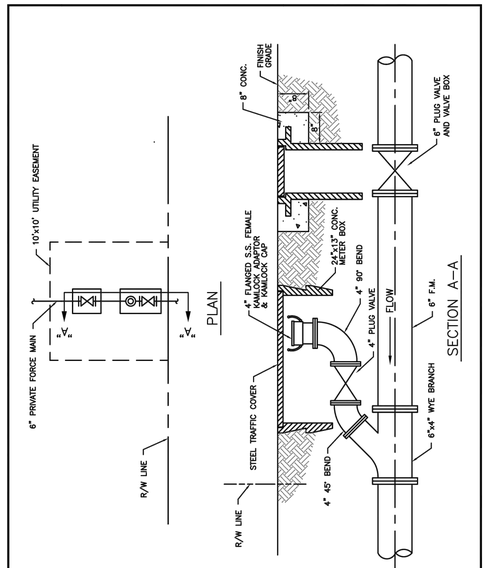

ISSUED: 03/01/1994	DEPARTMENT OF PUBLIC UTILITIES STANDARD DETAIL		REVISED: 06/08/2014
DRAWN: EAM	PRIVATE FORCE MAIN TIE-IN AT PROPERTY LINE		DRAWING NO.
APPROVED: XXX			S-14

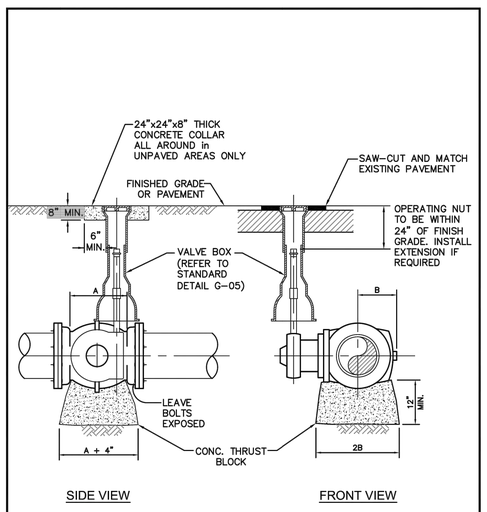

NOTE:
ALL CONCRETE TO BE 3000 P.S.I.

ISSUED: 03/01/1994	DEPARTMENT OF PUBLIC UTILITIES STANDARD DETAIL		REVISED: 06/08/2014
DRAWN: EAM	PLUG VALVE		DRAWING NO.
APPROVED: XXX			S-15

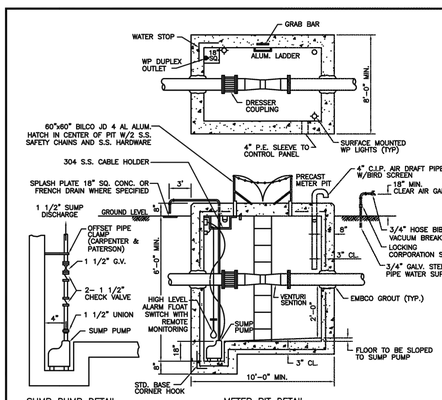

NOTES:

1. SHOP DRAWINGS SHALL BE SUBMITTED BY CONTRACTOR TO THE CITY PRIOR TO INSTALLATION. SHOP DRAWINGS TO SHOW ALL CALCULATIONS AND DIMENSIONS, INCLUDING CONCRETE REINFORCEMENT AND UPLIFT, AND SHALL BE SIGNED AND SEALED BY A FLORIDA REGISTERED PROFESSIONAL ENGINEER.
2. CONCRETE MIN. 4000 P.S.I. AT 28 DAYS, TYPE II, EXPOSED EDGES OF SLAB TO HAVE 3/4" CHAMFER.
3. THE CONTRACTOR SHALL FURNISH AND INSTALL THE FLOW METER AND INSTRUMENTATION AS SHOWN ON THE PLANS. THE FLOW METER AND ASSOCIATED INSTRUMENTATION IS TO PROVIDE FOR FLOW MEASUREMENT, INDICATING, RECORDING AND TOTALIZING OF SEWAGE IN A FULL PIPELINE OVER RANGES SPECIFIED. ACCURACY OF THE METERING SYSTEM, INCLUDING READOUT INSTRUMENTS, SHALL BE _____ OF THE ACTUAL RATE OVER THE SPECIFIED RANGE. LINEARITY AND REPEATABILITY SHALL BE _____.
4. THE METER SHALL BE _____.
5. SUMP PUMP SHALL BE _____ 1/3 HP (OR APPROVED EQUAL WITH BALL FLOAT ACTUATOR). THE POWER OUTLET SHOULD BE MOUNTED ABOVE THE EXPECTED HIGH WATER FLOOD LEVEL.
6. INSTALL HIGH LEVEL ALARM SENSOR (FLOAT SWITCH) IN METER PIT WITH REMOTE MONITORING.

*CODE: (3) 0-5 TO 0-30" H_2O
(4) 0-25 TO 0-150" H_2O
(5) 0-125 TO 0-750" H_2O

ISSUED: 03/01/1994	DEPARTMENT OF PUBLIC UTILITIES STANDARD DETAIL		REVISED: 06/08/2014
DRAWN: EAM	SEWAGE FORCE MAIN METER		DRAWING NO.
APPROVED: XXX			S-16

ALL ELEVATIONS SHOWN ON THESE PLANS ARE BASED ON THE NAVD 88. TO CONVERT ELEVATIONS TO NGVD 29, ADD 1.60'.

Always call 811 two full business days before you dig
Sunshine811.com

FULL SET FOR TAC SUBMITTAL

No.	REVISIONS	DATE	BY

Kimley»Horn

© 2023 KIMLEY-HORN AND ASSOCIATES, INC.
8201 PETERS ROAD, SUITE 2200, PLANTATION, FL 33324
PHONE: 954-535-5100 FAX: 954-739-2247
WWW.KIMLEY-HORN.COM REGISTRY NO. 35106

LICENSED PROFESSIONAL
STEFANO VIOLA, P.E.
FL LICENSE NUMBER 74655
DATE: 8/30/23

KHA PROJECT 044241040
DATE: AUG 2023
SCALE AS SHOWN
DESIGNED BY SV
DRAWN BY SV
CHECKED BY SV

SEWER DETAILS

PROJECT NO. DCM-19-001190

HOLLYWOOD NEW POLICE HEADQUARTERS
PREPARED FOR
CITY OF HOLLYWOOD
HOLLYWOOD FL

SHEET NUMBER
C-513

This document, together with the concepts and designs presented herein, as an instrument of service, is intended only for the specific purpose and client for which it was prepared. Reuse of and improper reliance on this document without written authorization and adaptation by Kimley-Horn and Associates, Inc. shall be without liability to Kimley-Horn and Associates, Inc.

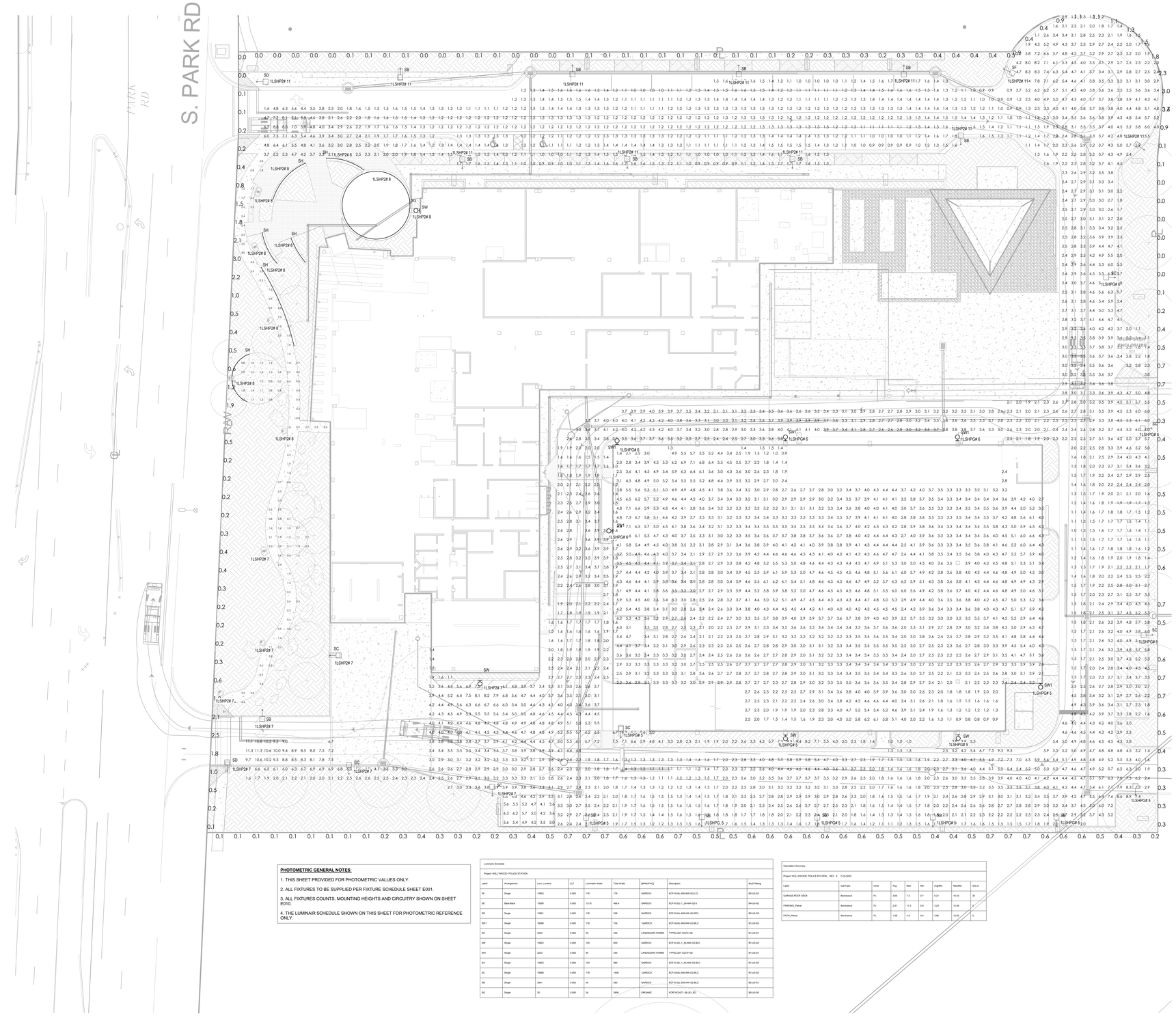

PHOTOMETRIC GENERAL NOTES:

1. THIS SHEET PROVIDED FOR PHOTOMETRIC VALUES ONLY.

2. ALL FIXTURES TO BE SUPPLIED PER FIXTURE SCHEDULE SHEET E001.

3. ALL FIXTURES COUNTS, MOUNTING HEIGHTS AND CIRCUITRY SHOWN ON SHEET E010.

4. THE LUMINAIR SCHEDULE SHOWN ON THIS SHEET FOR PHOTOMETRIC REFERENCE ONLY.

Luminaire Schedule

Project: HOLLYWOOD POLICE STATION

Label	Arrangement	Lum. Lumens	LLF	Luminaire Watts	Total Watts	[MANUFAC]	Description	BUG Rating
SF	Single	10803	0.900	176	176	GARDCO	ECF-S-64L-840-NW-G2-LCL	B0-U0-G2
SE	Back-Back	10956	0.900	121.6	486.4	GARDCO	ECF-S-32L-1_24-NW-G2-S	B4-U0-G2
SD	Single	10801	0.900	176	528	GARDCO	ECF-S-64L-840-NW-G2-RCL	B0-U0-G2
SW1	Single	16998	0.900	176	704	GARDCO	ECF-S-64L-840-NW-G2-BLC	B1-U0-G1
SK	Single	2233	0.900	40	200	LANDSCAPE FORMS	TYPOLOGY CQ701-02	B1-U0-G1
SW	Single	10802	0.900	120	800	GARDCO	ECF-S-32L-1_24-NW-G2-BLC	B1-U0-G2
SK1	Single	2233	0.900	40	240	LANDSCAPE FORMS	TYPOLOGY CQ701-02	B1-U0-G1
SA	Single	10802	0.900	120	960	GARDCO	ECF-S-32L-1_24-NW-G2-BLC	B1-U0-G2
SC	Single	16998	0.900	176	1408	GARDCO	ECF-S-64L-840-NW-G2-BLC	B1-U0-G3
SB	Single	3891	0.900	40	560	GARDCO	ECF-S-32L-840-NW-G2-BLC	B0-U0-G1
SG	Single	20	0.900	24	2856	ORGANIC	FORTACAST - BLUE LED	B0-U0-G0

Calculation Summary

Project: HOLLYWOOD POLICE STATION REV 6 7-24-2023

Label	CalcType	Units	Avg	Max	Min	Avg/Min	Max/Min	Grid Z
GARAGE ROOF DECK	Illuminance	Fc	5.65	7.3	3.7	6.21	10.43	33
PARKING_Planar	Illuminance	Fc	2.91	11.3	0.9	3.23	12.56	0
PATH_Planar	Illuminance	Fc	1.58	4.8	0.4	3.95	12.00	0

1 SITE PLAN PHOTOMETRICS - LIGHTING
1" = 20'-0"

OCCI
CONSULTING ENGINEERS
Orlando - Ft. Pierce - West Palm Beach - Miami - Ft. Myers - Tampa
Washington DC - Norfolk - Dallas - San Francisco
181 Melody Lane, Suite 107 · Ft. Pierce, FL 34950
Phone: (772) 466-1165 Fax: (772) 466-1134
www.occiassociates.com
Certificate of Authorization #8261

OWNER
CITY OF HOLLYWOOD
2007 RALEIGH ST
HOLLYWOOD, FL33020
T: 954 921 3426

ARCHITECT OF RECORD
O'DONNELL, DANWIOLF AND PARTNERS ARCHITECTS INC.
2432 HOLLYWOOD BLVD
HOLLYWOOD, FL 33020
AA 26005996
T: 954 518 3833

DESIGN & LANDSCAPE ARCHITECT
CANAL HOUSE, 3333 GRACE STREET NW
WASHINGTON, DC 20007 USA
T: 202 944 1413

STRUCTURAL ENGINEER
OSBORN ENGINEERING
15 W. CHURCH STREET - SUITE 201
ORLANDO, FLORIDA 32801-3350
T: 407 630 6253

MEP/FP ENGINEER
OCI ASSOCIATES, INC.
181 MELODY LANE, SUITE 107
FORT PIERCE, FL 34950
T: 772 466 1165

CIVIL ENGINEER
KIMLEY»HORN
8201 PETERS ROAD, SUITE 2200
PLANTATION, FL 33324
T: 954 535 5100

ENVIROMENTAL ENGINEER
LANGAN ENGINEERING AND ENVIROMENTAL SERVICES, INC.
110 EAST BROWARD BOULEVARD, SUITE 1500
FORT LAUDERDALE, FL 33301
T: 954 320 2100

LIFE SAFETY CONSULTANT
SLS CONSULTING, INC
360 PALERMO AVE
CORAL GABLES, FL 33134
T: 305.461.9862

RTCC CONSULTANT
WINBOURNE CONSULTING, LLC
1930 HARRISON ST, SUITE 204
HOLLYWOOD, FL 33020

FOR PERMITTING USE ONLY

REGISTERED PROFESSIONAL ENGINEER
LICENSE
NO. 66402
STATE OF FLORIDA
KYRIAKOS G. LARTIGIS, P.E.
8401 S. ORLANDO AVE.
WINTER PARK, FL 32789
FL REG. NO.: 66402

This item has been electronically signed and sealed by Kyriakos Lartigis, PE on 08/29/2023 using a Digital Signature.

Printed copies of this document are not considered signed and sealed and the signature must be verified on any electronic copies.

ARCHITECTURE AND DESIGN
2432 HOLLYWOOD BLVD HOLLYWOOD, FL 33020
T: 954.518.3833 F: 954.518.0151
www.odparchitects.com

PROJECT

HOLLYWOOD NEW POLICE HEADQUARTERS

PROJECT # : DCM 19-001190
401 S PARK RD HOLLYWOOD, FL 33021

ISSUE

60% CONSTRUCTION DOCUMENTATION

AUGUST 16, 2023

REVISIONS

NO	DATE	ISSUANCE DESCRIPTION
A	08/16/23	90% PERMIT SET

NOT FOR CONSTRUCTION

SCALE: 1" = 20'-0"
SHEET SIZE: ARCH D (36"X48") DO NOT SCALE DRAWINGS.
DATE: 08/16/2023
STARTED BY: ODP
DRAWING TITLE:

SITE PLAN - PHOTOMETRICS

SHEET NO.

E011

© COPYRIGHT 2023. THESE DOCUMENTS ARE THE SOLE PROPERTY OF O'DONNELL, DANWIOLF AND PARTNERS, ARCHITECTS INC. ANY ALTERATION OF AN ALTERED SET OF WITHOUT THE WRITTEN CONSENT OF O'DONNELL, DANWIOLF AND PARTNERS, ARCHITECTS INC. - DO NOT PERMIT