CITY OF HOLLYWOOD

IFB-4730-22-OT

Project No. 22-7112 & 22-5144

ON-CALL AND EMERGENCY WATER AND SEWER UTILITY REPAIR SERVICES

(RIC-MAN INTERNATIONAL, INC.)

CONFORMED SET

Prepared by:

PURCHASING SERVICES DIVISION

2600 Hollywood Blvd.
PO Box 229045

Hollywood, FL 33022

TABLE OF CONTENTS

CITY OF HOLLYWOOD

DEPARTMENT OF PUBLIC UTILITIES

ON-CALL AND EMERGENCY WATER AND SEWER UTILITY REPAIR SERVICES

SECTION	TITLE
00030	NOTICE TO BIDDERS
00100	INSTRUCTIONS TO BIDDERS
00200	CONE OF SILENCE
00300	PROPOSAL
00301	PROPOSAL BID FORM
00410	APPROVED BID BOND
00420	INFORMATION REQUIRED FROM BIDDERS
00435	LOCAL PREFERENCE
00495	TRENCH SAFETY FORM
00500	CONTRACT
00610	PERFORMANCE BOND
00620	PAYMENT BOND
00700	GENERAL CONDITIONS (Index to Articles)
00700	GENERAL CONDITIONS
00800	SUPPLEMENTARY GENERAL CONDITIONS

DIVISION 1 - GENERAL REQUIREMENTS

01010	SUMMARY OF WORK
01025	BASIS OF PAYMENT
01090	APPLICABLE STANDARDS AND CODE
01300	SUBMITTALS
01400	TESTING AND INSPECTION
01410	CONTRACTOR'S HEALTH AND SAFETY PLAN
01510	TEMPORARY UTILITY SERVICES AND STAGING AREA
01530	PROTECTION OF EXISTING FACILITIES
01550	SITE ACCESS AND STORAGE

01560 SPECIAL CONTROLS
01570 TRAFFIC REGULATIONS AND MAINTENANCE OF TRAFFIC
01600 EQUIPMENT AND MATERIALS
01700 PROJECT CLOSEOUT
01740 PERMITS

DIVISION 2 - SITE WORK
02000 WATER DISTRIBUTION SYSTEM
02050 WATER SERVICE CONNECTIONS AND TRANSFERS
02100 CLEARING AND GRUBBING
02140 DEWATERING
02141 TEMPORARY BYPASS PUMPING SYSTEMS
02210 EARTH EXCAVATION, BACKFILL, FILL AND GRADING
02220 EXCAVATION, BACKFILL AND COMPACTION
02222 EXCAVATION AND BACKFILL AND COMPACTION FOR UTILITIES
02223 EXCAVATION AND BACKFILL AND COMPACTION FOR STRUCTURES
02225 CONTAMINATED SOILS AND GROUNDWATER
02260 FINISH GRADING
02332 LIMEROCK BASE
02507 PRIME AND TACK COATS
02510 ASPHALTIC CONCRETE PAVEMENT
02526 CONCRETE PAVEMENT, CURB AND SIDEWALKS
02580 PAVEMENT MARKING AND SIGNS
02581 TRAFFIC SIGNS
02582 RAISED RETRO-REFLECTIVE PAVEMENT MARKERS
02930 SODDING
2752 TELEVISION SURVEY
02757 POINT REPAIR SANITARY SEWER

DIVISION 3 - CONCRETE
03290 JOINTS IN CONCRETE
03315 GROUT
03375 FLOWABLE FILL
03400 PRECAST CONCRETE

DIVISION 4 - MASONRY (NOT USED)

DIVISION 5 - METALS (NOT USED)

DIVISION 6 - WOOD AND PLASTICS (NOT USED)

DIVISION 7 - THERMAL AND MOISTURE PROTECTION (NOT USED)

DIVISION 8 - DOORS AND WINDOWS (NOT USED)

DIVISION 9 - FINISHES (NOT USED)

DIVISION 10 - SPECIALTIES (NOT USED)

DIVISION 11 – EQUIPMENT (NOT USED)

DIVISION 12 - FURNISHING (NOT USED)

DIVISION 13 - SPECIAL CONSTRUCTION (NOT USED)

DIVISION 14 - CONVEYING SYSTEMS (NOT USED)

DIVISION 15 - MECHANICAL CONSTRUCTION

15000 PIPING GENERAL
15001 WATER, SERVICES AND MISCELLANEOUS FITTINGS
15060 PIPING AND FITTINGS
15100 VALVES, GENERAL
15102 TAPPING SLEEVES AND TAPPING VALVES
15995 PIPELINE TESTING AND DISINFECTION
15997 POLYETHYLENE ENCASEMENT

DIVISION 16 - ELECTRICAL (NOT USED)

DIVISION 17 - CONTROLS (NOT USED)

APPENDICES

APPENDIX A - CITY OF HOLLYWOOD DEPARTMENT OF PUBLIC UTILITIES STANDARD DETAILS – GENERAL
APPENDIX B - CITY OF HOLLYWOOD DEPARTMENT OF PUBLIC UTILITIES STANDARD DETAILS - SEWER
APPENDIX C - CITY OF HOLLYWOOD DEPARTMENT OF PUBLIC UTILITIES STANDARD DETAILS – WATER
APPENDIX D - 24-INCH RECLAIMED WATER FORCE MAIN AS-BUILTS AND REPAIR DETAILS

CITY OF HOLLYWOOD
DEPARTMENT OF PUBLIC UTILITIES
ENGINEERING AND CONSTRUCTION SERVICES DIVISION (ECSD)

SECTION 00030

NOTICE TO BIDDERS

PROJECT NAME: **ON-CALL AND EMERGENCY WATER AND SEWER UTILITY REPAIR SERVICES**
BID NUMBER: **IFB-4730-22-OT**

NOTICE IS HEREBY GIVEN that the City Commission of the City of Hollywood, Florida, is advertising for sealed bids which shall be submitted to the City Clerk's Office (City Hall, 2600 Hollywood Blvd., Hollywood, Florida 33022, Suite 202 **until 3:00 p.m.** local time, **July 28th, 2022.** The bids will be opened and read publicly in the City's Procurement Services Division, 2600 Hollywood Blvd., Suite 303, P.O. Box 229045, Hollywood, Florida 33022-9045

The City of Hollywood Public Utilities Department (Utilities) owns, operates and maintains the water distribution and sewer collection system infrastructure within the City's service area. The Utilities staff is responsible for routine repair and improvements to both systems. In emergency situations (necessitates immediate action), Utilities staff may require additional assistance by an experienced and highly specialized outside contractor. The purpose of this solicitation is to identify qualified contractors to provide as-needed on-call or emergency services over the next two years, as described in the Solicitation and Bid Price Schedule. Work to be performed by the Successful Bidder(s) under this Contract shall consist of furnishing all labor, tools, materials, supplies, machinery, essential communications, equipment, transportation, services and incidentals required for on-call/routine or emergency installation and repair services, including repair and installation of water mains, gravity sewer mains, force mains and appurtenances within the City of Hollywood, as well as any collateral damages, including but not limited to, pavement restoration, sod restoration and related restoration services in a competent, timely and professional manner.

An optional pre-bid conference will be held at the City of Hollywood Southern Regional Wastewater Treatment Plant, 1621 N. 14th Avenue, Hollywood, Florida, 33020, ESS Conference Room, First Floor on **July 7th 2022 at 3:00 p.m.**

The Bid Package and Contract documents can be downloaded at: www.bidsync.com. For information concerning procedures for responding to this Bid, contact the Procurement Services Division Otis J. Thomas, Senior Purchasing Agent via email at othomas@hollywoodfl.org or by phone at (954) 921-3224, or Staci Alli, Office Assistant I via email at salli@hollywoodfl.org or by phone at 954-921-3222. Such contact is to be for clarification purposes only. It is preferred that all other questions be submitted in writing via bidsync.com. Deadline for questions is **July 21st, 2022 at 5 p.m. local time.**

Each bid must be accompanied by a Bid Security in an amount no less than ten percent (5%) of the bid amount. Said security shall be in the form of a Certified Check or Cashier's Check on a solvent National or State Bank, or a bid bond executed by the Bidder and a qualified Surety, satisfactory and payable to the City of Hollywood, Florida.

A Cone of Silence is in effect with respect to this bid. The Cone of Silence prohibits certain communications between potential vendors and the City. For further information, please refer to Section 30.15(F) of the City's Code of Ordinances.

The City of Hollywood is strongly committed to ensuring the participation of local Hollywood

vendors in the procurement of goods and services. For additional information about the City's Local Preference Ordinance, visit www.hollywoodfl.org.

It will be the Bidder's sole responsibility to hand-deliver or mail his/her proposal to the City Clerk's Office at City Hall so that it arrives on or before the closing time and date for the receipt of bids as noted above.

The City Commission reserves the right to reject any or all bids, to waive informalities and to accept or reject all or any part of any bid, as they may deem to be in the best interest of the City of Hollywood, Florida.

Dated this 27th Day of June, 2022

CITY OF HOLLYWOOD, FLORIDA

Otis J. Thomas, Senior Purchasing Agent
Procurement Services Division

SECTION 00100

INSTRUCTIONS TO BIDDERS

1. PREPARATION OF BIDS:

Bids must be submitted on the separate and enclosed **BIDDING PACKAGE** forms, which shall be completed by **computer, typewriter** or legibly handwritten in ink. The Bid price of each item on the form must be stated in words and numerals; in case of a conflict, words will take precedence. Where unit prices and extended totals are required, unit prices take precedence. Likewise, discrepancies between the indicated sum of any column of figures and the correct sum thereof will be resolved in favor of the correct sum.

If the Bid is made by an individual, he must sign his name therein and state his address. If the Bid is made by a firm or partnership, its name and address must be stated, as well as the name and address of each member of the firm or partnership. Bids by corporations must be signed by an authorized corporate officer (accompanied by evidence of authority to sign) and the corporate seal must be affixed and attested by the Secretary or an Assistant Secretary of the corporation. The corporate address and state of incorporation shall be shown below the signature. When the state of incorporation is other than Florida, proof of registry with Florida must be attached.

2. RECEIPT AND OPENING OF BIDS:

The Bid Package consisting of the PROPOSAL, PROPOSAL BID FORM, APPROVED BID BOND, TRENCH SAFETY FORM, INFORMATION REQUIRED FROM BIDDERS AND LIST OF SUBCONTRACTORS AND/OR MATERIAL SUPPLIERS shall be completed, signed and sealed as required and must be delivered or mailed to the City Clerk of Hollywood, Florida, by the time and date specified in the Notice to Bidders and shall be properly identified on the face thereof.

Proposals will be publicly opened and immediately read aloud at the time and place designated in the Notice to Bidders. No proposal will be considered which is not based upon the Specifications and Requirements, or which contains any letter or written memorandum qualifying the same, or which is not properly made out and signed in writing by the Bidder.

3. PRE-BID CONFERENCE:

The **optional** pre-bid meeting for the project will occur on **July 7th, 2022 at 3:00 pm** at the Southern Regional Wastewater Treatment Plant, 1621 N. 14th Avenue, Hollywood,

Florida, 33020, ESS Conference Room, First Floor.

4. CONTRACT DOCUMENTS:

The Contract Documents give the location and description of the work to be done under this Contract and estimated quantities of each item of work for which Bids are invited, the time in which the work must be completed, the amount of the Bid Guaranty, if any, and the date, time and place of the receipt and opening of the Bids

5. EXAMINATION OF CONTRACT DOCUMENTS AND REQUIREMENTS:

The Bidder is required to carefully examine the Contract Documents and requirements for the work contemplated. It will be assumed that the Bidder has investigated and is fully informed as to the requirements of the Contract Documents, laws, ordinances, codes and any other factors which may affect the performance of the work. Failure to be so informed will not relieve a successful Bidder of his obligation to furnish all material, equipment and labor necessary to carry out the provision of the Contract Documents and to complete the contemplated work for the consideration set forth in his Bid.

6. DIMENSIONS, QUANTITIES AND SUBSURFACE INFORMATION:

Dimensions, quantities and subsurface information supplied by the City are in no way warranted to indicate true amounts or conditions. Bidders/Contractors shall neither plead misunderstanding or deception, nor make claims against the City if the actual amounts, conditions or dimensions do not conform to those stated. Any "Outside" reports made available by the Engineer are neither guaranteed as to accuracy or completeness, nor a part of the Contract Documents. No guarantee is expressed or implied as to the total quantity of services to be purchased under this Contract. It is noted that estimated quantities will be used for bid comparison purposes only.

7. ADDENDA - CHANGES WHILE BIDDING:

During the Bidding period, Bidders may be furnished addenda or bulletins for additions or alterations to the Plans or Specifications which shall be included in the work covered by the Proposal.

Any prospective Bidder in doubt as to the meaning of any part of the Drawings, Specifications or other Contract Documents may submit a written request to the Engineer for an interpretation. The Bidder submitting the request will be responsible for its prompt delivery. Any interpretation of the documents will be made by an addendum and a copy

of such addendum will be mailed or delivered to each prospective Bidder who has received a set of documents. The City will not be responsible for any other explanations or interpretations of the proposed documents. Each prospective bidder must submit their questions or inquiries via www.bidsync.com.

ALL INQUIRES MUST BE RECEIVED, IN WRITING, BY THE CITY OF HOLLYWOOD NO LATER THAN 5:00 P.M., JULY 21, 2022. AN ADDENDUM MAY BE ISSUED IF REQUIRED.

8. BID GUARANTY:

A Bid Guaranty in the form of a Cashier's Check, Certified Check or Bid Bond executed by the Bidder and a qualified Surety in the amount of 5% of the Bid is required for this project in accordance with the Notice to Bidders.

9. TRENCH SAFETY FORM:

The Trench Safety Form included in the Bid Documents must be completed and signed. Noncompliance with this requirement may invalidate the bid.

10. QUALIFICATIONS AND DISQUALIFICATIONS OF BIDDERS:

The Contract will be awarded only to the responsive and responsible bidder(s), who in the opinion of the Engineer, are fully qualified to undertake the work and are in compliance with the City's Local Preference Criteria (when applicable). The City reserves the right before awarding the Contract to require a bidder to submit such evidence of his qualifications as it may deem necessary and may consider any available evidence of his financial status, technical qualifications and other qualifications and abilities.

Bidders shall submit proof, along with their bid, that their firm has successfully completed comparable projects meeting the following criteria:

A. The Bidder shall have successfully completed **(or on-going)** a minimum of ~~five (5)~~ **three (3)** relevant projects demonstrating experience with water and sewer pipe ~~routine and~~ emergency repair work. These projects shall have been performed within the past ~~three (3)~~ **two (2)** years from the date of the Invitation to Bid.

B. Provide **at least** four **(4)** verifiable references for projects similar in size and scope or types of work as listed in this solicitation using the attached vendor reference form.

C. Shall be fully qualified and holds the ~~proper~~ Federal, State, County and/or municipal licenses, including but not limited to certificates of competency and occupational licenses to perform the scope of work described in the solicitation.

D. Be properly licensed to perform work as a General Contractor in the State of Florida, Broward County, and the City of Hollywood.

E. Have been a ~~properly~~ licensed General Contractor in the **State of Florida and Broward County** under the present name of the organization for ~~a minimum of~~ the previous ten (10) years **(minimum).**

F. City is seeking Contractor who could be available on an emergency basis. Contractor must demonstrate that they own the appropriate equipment and have staff to perform the Work

Any one of the following causes, among others, may be considered as sufficient justification to disqualify a bidder and reject his or her bid:

A. Submission of more than one bid for the same work by an individual, firm, partnership or corporation under the same or different names.

B. Evidence of collusion.

C. Previous participation in collusive bidding on work for the City of Hollywood, Florida.

D. Submission of an unbalanced bid in which the prices bid for some items are out of proportion to the prices bid for other items.

E. Lack of competency. The Bidder shall provide proof that their past experience can demonstrate similar complexity and size compared to this contract. The Engineer may declare any bidder ineligible, at any time during the process or receiving bids or awarding the contract, if developments arise which, in his opinion, adversely affects the bidder's responsibility. The Bidder will be given an opportunity, by the engineer, to present additional evidence before final action is taken.

F. Lack of responsibility as shown by past work judged by the Engineer from the standpoint of workmanship and progress.

G. Non-compliance with the City's Local Preference (when applicable).

H. Uncompleted work for which the Bidder is committed by Contract, which is in the judgment of the Engineer, might hinder or prevent the prompt completion of work under this Contract.

I. Being in arrears on any existing Contracts with the City, or any taxes, licenses or other monies due the City; in litigation with the City or having defaulted on a previous contract with the City.

11. LIFE AND WITHDRAWAL OF BID:

All Bids shall remain open for 90 days after the day of the Bid opening, however, the Engineer may, at his sole discretion, release any Bid and return the Bid Guaranty prior to that date. Any Bid may be modified or withdrawn prior to the time scheduled for the opening of Bids.

12. REJECTION OF IRREGULAR BIDS:

Bids will be considered irregular and may be rejected if they show omissions, alterations of form, additions not called for, conditions, limitations, unauthorized alternate Bids or other irregularities of any kind.

13. BIDDING ERRORS:

If after the opening of bids, a Bidder claims an error and requests to be relieved of the Award, or the Engineer believes that an error may have been made then, the Bidder shall present his work sheets and supplier quotations to the Engineer for verification. This information shall be presented on the same day as the bid opening or if the opening is in the afternoon then on the following business day. When the Engineer has suspected an error and requires the documents, Bidder's failure to produce them within the time specified shall make the Bidder non- responsive and thereby eligible for disqualification. Award may then be made to the next lowest responsive, responsible Bidder, or the work may be re-advertised or it may be performed by City forces, as the Commission desires.

14. AWARD OF CONTRACT (MULTIPLE AWARDS):

The City Commission reserves the right to reject any or all Bids, or any part of any Bid, to waive any informality in any Bid, or to re-advertise for all or any part of the work contemplated. If Bids are found to be acceptable by the City Commission, written notice of award will be given to the lowest responsive, responsible Bidder(s).

A. The City reserves the right to make multiple awards for this contract. Awards may be made to a maximum of two (2) responsive, responsible vendors. ~~In the event the City exercises this right, the lowest, responsive, responsible vendor will be designated as the primary vendor. The next low, responsive, responsible Vendor will be designated as the secondary vendor.~~ **In the event the City exercises this right, the two (2) selected lowest, responsive, responsible vendors will be awarded a maximum $1 million in Contract**. The City is not obligated to make multiple awards.

B. ~~The Primary Contract will be awarded to the low responsive, responsible vendor (primary vendor). The Secondary Contract will be awarded to the second lowest, responsive, responsible vendor (secondary vendor).~~ **The City will alternate the issuance of Work Orders / Purchase Orders between the two (2) awarded Contracts. City reserves the right to award more work orders to the most responsive Contractor.**

C. ~~Work Orders / Purchase Orders issued under the Secondary Contract will be issued when the Primary vendor is unable to perform or when the City determines that the Primary Vendor's maximum service capacity has been reached (based on outstanding City purchase orders) and additional service capacity is still needed by the City to meet the City's service timeframes.~~

D. Awarded Contractor(s) cannot decline projects in order to be assigned larger or more favorable projects. Contractor may be in breach of contract for non-performance or City may elect to not renew contract for Contractor's failure to accept Work.

15. EXECUTION OF CONTRACT:

The Bidder (s) to whom the Contract is awarded shall, within ten days of the date of award, execute and deliver three (3) copies of the following to the Engineer.

A. The Contract

B. Performance and Payment Bond

C. Evidence of required Insurance

D. Proof of authority to execute the Contract

E. Proof of authority to execute the Bond on behalf of the Awardee

F. List of Subcontractors, estimated Contract Value for each and proof that such subcontractors possess all required Federal, State, County and/or municipality licenses, including but not limited to certified of competency and occupational license.

The above documents must be furnished, executed and delivered before the Contract will be executed by the City. The Contract shall not be binding upon the City until it has been executed by the City and a copy of such fully executed Contract is delivered to the Contractor.

16. FAILURE TO EXECUTE CONTRACT, BID GUARANTY FORFEITED:

Should the Bidder to whom the Contract has been awarded refuse or fail to complete the requirements of Article 15 above within ten (10) days after Notice of Award, the additional time in days (including weekends) required to CORRECTLY complete the documents will be deducted, in equal amount, from the Contract Time, or the City may elect to revoke the Award. In the same manner as Article 13, the Bid Guaranty of any Bidder failing to execute the awarded Contract shall be retained by the City and the Contract awarded as the Commission desires

17. GUARANTY OF FAITHFUL PERFORMANCE AND PAYMENT:

A Performance Bond and a Payment Bond each equal to 100 percent of the total Bid will be required of the Awardee. The Bond must be written through a company licensed to do business in the State of Florida and be rated at least "A", Class X, in the latest edition of "Best's Key Rating Guide", published by A.M. Best Company. As per Florida Statute Section 255.05, the Contractor shall be required to record the payment and performance bonds in the public records of Broward County.

18. INSURANCE:

Bidder must satisfy all insurance requirements as set forth in the Supplementary and General Conditions.

The insurance policy shall not contain any exceptions that would exclude coverage for risks that can be directly or reasonably related to the scope of goods or services in this bid/proposal. A violation of this requirement at any time during the term, or any extension thereof shall be grounds for the immediate termination of any contract entered in to pursuant to this bid/proposal. In order to show that this requirement has been met, along with an insurance declaration sheet demonstrating the existence of a valid policy of insurance meeting the requirements of this bid/proposal, the successful proposer must submit a signed statement from insurance agency of record that the full policy contains no such exception.

19. QUALIFICATIONS:

At the time of submission of the bid, Bidder must possess, and be able to provide City, any and all required Federal, State, County and/or municipal licenses, including but not limited to certificates of competency and occupational licenses. Moreover, upon receipt of the Award of the Contract, Bidder must provide proof of valid licensing for all subcontractors and/or material suppliers hired by the Contractor as set forth in Article 15 above.

When the Bidder is a Joint Venture, in order to satisfy the construction licensing requirements one member of a Joint Venture must hold a valid state certificate as well as the appropriate county and city license. The Contractor shall be held responsible for assurance that all subcontractors and/or material suppliers hired by the Contractor have the appropriate state certificate and licenses.

20. PERMITS:

The Contractor and Subcontractors must obtain Building Permits required for all work covered under this contract as well as any other permit required by any other regulatory agency. The Master Building Permit required by the City shall be obtained by the Contractor but paid for by the City. Any and all other permits required by the City, County, State of Florida, or other regulatory agency shall be obtained and paid for by the Contractor.

The Contractor or Subcontractors shall also be responsible to call for all inspections as required in Section 105 (Inspections) of the latest edition of the Florida Building Code.

- END OF SECTION -

SECTION 00200

NOTICE OF IMPOSITION OF CONE OF SILENCE

On June 27th, 2022, the City of Hollywood, Florida Department of Procurement Services Division issued the following:

Bid #IFB-4730-22-OT: ON-CALL AND EMERGENCY WATER AND SEWER UTILITY REPAIR SERVICES

Project Scope: Work to be performed under this Contract shall consist of furnishing all labor, tools, materials, supplies, machinery, essential communications, equipment, transportation, services and incidentals required for routine or emergency installation and repair services, including repair and installation of water mains, gravity sewer mains, force mains and appurtenances within the City of Hollywood, as well as any collateral damages, including but not limited to, pavement restoration, sod restoration and related restoration services in a competent, timely and professional manner. All emergency Work shall be completed in compliance with the solicitation documents, American Water Works Association standard practices and the City of Hollywood Public Utilities Department "Standard Details, Specifications Policies and Procedures for Water Distribution and Sewage Collection", all applicable local, state and Federal laws and regulations including the Occupational Safety and Health Act Administration of the U.S. Department of Labor (OSHA), including all costs of permits and cost of regulatory compliance.

Pursuant to Section 30.15(F) of the Code of Ordinances, a Cone of Silence has been imposed on the items set forth above. The Cone of Silence will continue until the City awards or approves a contract, votes to reject all bids or responses, or otherwise takes action which ends the solicitation. If the City Commission refers the item back to the City Manager and staff for further review, the Cone of Silence shall remain in effect until an award is made, a contract is approved, or the City Commission takes any other action which ends the solicitation.

cc: City Commission Office
City Manager
City Clerk (sunshine board)
Affected department(s)/office(s)

- END OF SECTION -

BID PACKAGE

FOR

ON-CALL AND EMERGENCY WATER AND SEWER UTILITY REPAIR SERVICES

IFB - 4730-22-OT

SUBMITTED BY: RIC-MAN INTERNATIONAL, INC

June 2022

SECTION 00300

PROPOSAL

TO THE MAYOR AND COMMISSIONERS
CITY OF HOLLYWOOD, FLORIDA

SUBMITTED 7/28/22

Dear Mayor and Commissioners:

The undersigned, as BIDDER, hereby declares that the only person or persons interested in the Proposal as principal or principals is or are named herein and that no other person than herein mentioned has any interest in this Proposal or in the Contract to be entered into; that this Proposal is made without connection with any other person, company or parties making a Bid or Proposal; and that it is in all respects fair and in good faith without collusion or fraud.

The BIDDER further declares that he has examined the site of the Work and informed himself fully in regard to all conditions pertaining to the place where the Work is to be done; that he has examined the Drawings and Specifications for the Work and contractual documents relative thereto, including the Notice to Bidders, Instructions to Bidders, Proposal Bid Form, Form of Bid Bond, Form of Contract and Form of Performance Bond, General, Supplementary and Technical Specifications, Addenda, Drawings, and Local Preference Program, Exhibit A, and has read all of the Provisions furnished prior to the opening of bids; and that he has satisfied himself relative to the work to be performed.

The undersigned BIDDER has not divulged to, discussed or compared his bid with other bidders and has not colluded with any other BIDDER of parties to this bid whatever.

If this Proposal is accepted, the undersigned BIDDER proposes and agrees to enter into and execute the Contract with the City of Hollywood, Florida, in the form of Contract specified; of which this Proposal, Instructions to Bidders, General Specifications, Supplementary Conditions and Drawings shall be made a part for the performance of Work described therein; to furnish the necessary bond equal to one hundred (100) percent of the total Contract base bid, the said bond being in the form of a Cash Bond or Surety Bond prepared on the applicable approved bond form furnished by the CITY; to furnish all necessary materials, equipment, machinery, tools, apparatus, transportation, supervision, labor and all means necessary to construct and complete the work specified in the Proposal and Contract and called for in the Drawings and in the manner specified; to commence Work on the effective date established in the "Notice to Proceed" from the ENGINEER; and to substantially complete all Contract Work as per Project Schedule of Section 00800, and as stated in the "Notice to Proceed" or pay liquidated damages for each calendar day in excess thereof, or such actual and consequential damages as may result therefrom, and to abide by the Local Preference Ordinance.

The BIDDER acknowledges receipt of the following addenda:

No. 1 Dated 7/25/2022
No. _____ Dated _____
No. _____ Dated _____

And the undersigned agrees that in case of failure on his part to execute the said Contract and the Bond within ten (10) days after being presented with the prescribed Contract forms, the check or Bid Bond accompanying his bid, and the money payable thereon, shall be paid into the funds of the City of Hollywood, Florida, otherwise, the check or Bid Bond accompanying this Proposal shall be returned to the undersigned.

Attached hereto is a certified check on the

_____Bank of _____

or approved Bid Bond for the sum of 5% OF BID

_____ Dollars ($) according to the conditions under the Instructions to Bidders and provisions therein.

NOTE: If a Bidder is a corporation, the legal name of the corporation shall be set forth below, together with signature(s) of the officer or officers authorized to sign Contracts on behalf of the corporation and corporate seal; if Bidder is a partnership, the true name of the firm shall be set forth below with the signature(s) of the partner or partners authorized to sign Contracts in behalf of the partnership; and if the Bidder is an individual, his signature shall be placed below; if a partnership, the names of the general partners.

WHEN THE BIDDER IS AN INDIVIDUAL:

_____
(Signature of Individual)

_____
(Printed Name of Individual)

_____
(Address)

****

WHEN THE BIDDER IS A SOLE PROPRIETORSHIP OR OPERATES UNDER A TRADE NAME:

_____
(Name of Firm)

_____
(Address)

_____(SEAL)
(Signature of Individual)

****

WHEN THE BIDDER IS A PARTNERSHIP:

_____
(Name of Firm) A Partnership

_____
(Address)

By: _____
(SEAL)
(Partner)

Name and Address of all Partners:

_____

_____

****

WHEN THE BIDDER IS A JOINT VENTURE:

_____
(Correct Name of Corporation

By: _____
(SEAL)
(Address)

_____
(Official Title)

As Joint Venture
(Corporate Seal)

Organized under the laws of the State of_____, and authorized by the law to make this bid and perform all Work and furnish materials and equipment required under the Contract Documents.

********** WHEN

THE BIDDER IS A CORPORATION:

RIC-MAN INTERNATIONAL, INC
_____
(Correct Name of Corporation

By: PRESIDENT (SEAL)
_____
(Official Title)

1545 NW 27TH AVE POMPANO BEACH, FL 33069
_____
(Address of Corporation)

Organized under the laws of the State of FL, and authorized by the law to make this bid and perform all Work and furnish materials and equipment required under the Contract Documents.

CERTIFIED COPY OF RESOLUTION OF
BOARD OF DIRECTORS

RIC-MAN INTERNATIONAL, INC
(Name of Corporation)

RESOLVED that MICHAEL JANKOWSKI
(Person Authorized to Sign)

PRESIDENT of RIC-MAN INTERNATIONAL, INC
(Title) (Name of Corporation)

be authorized to sign and submit the Bid or Proposal of this corporation for the following project:

CITY OF HOLLYWOOD, FLORIDA

ON-CALL AND EMERGENCY WATER AND SEWER UTILITY REPAIR SERVICES

Bid No.: IFB-4730-22-OT

The foregoing is a true and correct copy of the Resolution adopted by

RIC-MAN INTERNTIONAL, INC at a meeting of its Board of
(Name of Corporation)

Directors held on the 31ST day of DECEMBER, 20 22.

By: _____

Title: PRESIDENT

(SEAL)

The above Resolution MUST BE COMPLETED if the Bidder is a Corporation.

- END OF SECTION -

SECTION 00301

CITY OF HOLLYWOOD
DEPARTMENT OF PUBLIC UTILITIES
ENGINEERING AND CONSTRUCTION
SERVICES DIVISION

PROPOSAL BID FORM

Bid No.: **IFB-4730-22-OT**
Project Name: **ON-CALL AND EMERGENCY WATER AND SEWER UTILITY REPAIR SERVICES (7112 & 5144)**

BASE BID

The City is seeking bids/proposals from qualified vendors for the items listed below in accordance with the terms, conditions, and specifications contained in this solicitation. Estimated quantities listed are for information and tabulation purposes only. No warranty or guarantee of quantities needed is given or implied. It is understood that the Contractor will furnish the City's needs as they arise. **CONTRACTOR SHALL PROVIDE UNIT PRICE FOR EACH LINE ITEM**

Item No.	Description	Est. Qty	Unit	Unit Price	Total Price
Bid Package 1 – On-call Routine Repair Services (labor, equipment, tools, and parts)					
1	Mobilization for On-call Routine Work Order (≤$25,000)	1	EA	$ 17,000.00	$ 17,000.00
2	Mobilization for On-call Routine Work Order (>$25,000 to $100,000)	1	EA	$ 17,000.00	$ 17,000.00
3	Mobilization for On-call Routine Work Order (≥$100,000)	1	EA	$ 23,000.00	$ 23000.00
4	Cut and Connect 4-inch WM to Existing System (5 feet MAX and up to 6 - 10 feet depth)	1	EA	$ 8600.00	$ 8600.00
5	Cut and Connect 6-inch WM to Existing System (5 feet MAX and up to 6 - 10 feet depth)	1	EA	$ 8600.00	$ 8600.00
6	Cut and Connect 8-inch WM to Existing System (5 feet MAX and up to 6 - 10 feet depth)	1	EA	$ 9600.00	$ 9600.00
7	Cut and Connect 10 inch or 12-inch WM to Existing System (5 feet MAX and up to 6 - 10 feet depth)	1	EA	$ 9600.00	$ 9600.00
8	Cut and Connect 16-inch WM to Existing System (5 feet MAX and up to 6 – 10 feet depth)	1	EA	$ 9600.00	$ 9600.00

The City is seeking bids/proposals from qualified vendors for the items listed below in accordance with the terms, conditions, and specifications contained in this solicitation. Estimated quantities listed are for information and tabulation purposes only. No warranty or guarantee of quantities needed is given or implied. It is understood that the Contractor will furnish the City's needs as they arise. **CONTRACTOR SHALL PROVIDE UNIT PRICE FOR EACH LINE ITEM**					
9	Cut and Connect 20-inch WM to Existing System (5 feet MAX and up to 6 - 10 feet depth)	1	EA	$ 9600.00	$ 9600.00
10	Cut and Connect 24-inch WM to Existing System (5 feet MAX and up to 6 - 10 feet depth)	1	EA	$ 9600.00	$ 9600.00
11	Cut and Connect 6 inch or 8-inch FM to Existing System. No Bypass. (5 feet MAX and up to 6 - 10 feet depth)	1	EA	$ 8800.00	$ 8800.00
12	Cut and Connect 10 inch or 12-inch FM to Existing System. No Bypass. (5 feet MAX and up to 6 - 10 feet depth)	1	EA	$ 9600.00	$ 9600.00
13	Cut and Connect 16 inch or 20-inch FM to Existing System. No Bypass. (5 feet MAX and up to 6 - 10 feet depth)	1	EA	$ 9600.00	$ 9600.00
14	Cut and Connect 24-inch FM to Existing System. No Bypass. (5 feet MAX and up to 6 - 10 feet depth)	1	EA	$ 9600.00	$ 9600.00
15	Cut and Grout 8-inch pipe abandoned (up to 12 feet depth) (payment based on Min 100 feet)	1	LF	$ 18.00	$ 18.00
16	Cut and Grout 12-inch pipe abandoned (up to 12 feet depth) (payment based on Min 100 feet)	1	LF	$ 23.00	$ 23.00
17	Cut and Grout 16-inch pipe abandoned (up to 12 feet depth) (payment based on Min 100 feet)	1	LF	$ 31.00	$ 31.00
18	Cut and Grout 24-inch pipe abandoned (up to 12 feet depth) (payment based on Min 100 feet)	1	LF	$ 51.00	$ 51.00
19	Install Sanitary Service Line on Private Property by Licensed Plumber and Permitting (Min 10 LF)	1	LF	$ 42.00	$ 42.00

The City is seeking bids/proposals from qualified vendors for the items listed below in accordance with the terms, conditions, and specifications contained in this solicitation. Estimated quantities listed are for information and tabulation purposes only. No warranty or guarantee of quantities needed is given or implied. It is understood that the Contractor will furnish the City's needs as they arise. **CONTRACTOR SHALL PROVIDE UNIT PRICE FOR EACH LINE ITEM**

20	Install Water Service Line on Private Property by Licensed Plumber and Permitting (Min 10 LF)	1	LF	$ 260.00	$ 260.00
21	Furnish and Install Tapping Saddle and Water Service Line (1-inch) on Existing Water Main	1	EA	$ 4000.00	$ 4000.00
22	Furnish and Install Tapping Saddle and Water Service Line (2-inch) on Existing Water Main	1	EA	$ 4000.00	$ 4000.00
23	Furnish and Install Asphalt Concrete Pavement Patch (Min 7 SY)	1	SY	$ 630.00	$ 630.00
24	Mill Asphalt Concrete Pavement 1 - inch Thick (Min 60 SY)	1	SY	$ 150.00	$ 150.00
25	Vertical Valve Box Adjustment	1	EA	$ 880.00	$ 880.00
26	Adjust Manhole Ring Elevation	1	EA	$ 880.00	$ 880.00
27	Replace Concrete Curb and Gutter Type F (Min 50 LF)	1	LF	$ 47.00	$47.00
28	Replace Reflective Pavement Marker RPM (Min 5 RPMs)	1	EA	$ 29.00	$ 29.00
29	Replace Thermoplastic Striping White or Yellow Solid 6 inch (Min 50 LF)	1	LF	$ 12.00	$ 12.00
30	Replace Thermoplastic Striping White or Yellow Solid 8 inch (Min 50 LF)	1	LF	$ 14.00	$ 14.00
31	Replace Thermoplastic Striping White or Yellow Solid 12 inch (Min 50 LF)	1	LF	$ 15.00	$ 15.00
32	Replace Thermoplastic Striping White or Yellow Solid 24 inch (Min 50 LF)	1	LF	$ 22.00	$ 22.00
33	Restoration of Asphalt Driveways (Min 10 SY)	1	SY	$ 67.00	$ 67.00
34	Restoration of Concrete Driveways (Min 10 SY)	1	SY	$ 92.00	$ 92.00
35	Furnish and Install Sod Saint Augustine (Min 50 SY)	1	SY	$ 32.00	$ 32.00

The City is seeking bids/proposals from qualified vendors for the items listed below in accordance with the terms, conditions, and specifications contained in this solicitation. Estimated quantities listed are for information and tabulation purposes only. No warranty or guarantee of quantities needed is given or implied. It is understood that the Contractor will furnish the City's needs as they arise. **CONTRACTOR SHALL PROVIDE UNIT PRICE FOR EACH LINE ITEM**					
36	Furnish and Install Sod Bahia (Min 50 SY)	1	SY	$ 30.00	$ 30.00
37	Replacement of 4-inch Concrete Sidewalk (Min 30 SY)	1	SY	$ 88.00	$ 88.00
38	Replacement of 6-inch Concrete Sidewalk (Min 30 SY)	1	SY	$ 110.00	$ 110.00
39	Furnish and Install FDOT Number 89 Stone (Min 5 CY)	1	CY	$ 68.00	$ 68.00
40	Furnish and Install Compacted Subgrade (Min 5 CY)	1	CY	$ 68.00	$ 68.00
41	Furnish and Install Compacted Limerock (Min 5 CY)	1	CY	$ 71.00	$ 71.00
42	Maintenance of Traffic (MOT) Plans	1	SHEET	$ 500.00	$ 500.00
43	Traffic control - Flagman (Each)	1	HR	$ 870.00	$ 870.00
44	Traffic control - Arrow Board (Each)	1	DAY	$ 220.00	$ 220.00
45	Traffic control – Barricade (Each)	1	DAY	$ 220.00	$ 220.00
46	Traffic Cones w/Reflective Marker (Each)	1	DAY	$ 280.00	$ 280.00
47	Advanced Warning / Detour Sign (Each)	1	DAY	$ 110.00	$ 110.00
48	Furnish and Install Trench Safety Steel Plates (Each)	1	EA	$ 230.00	$ 230.00
49	Flowable Fill Non-Excavatable (Min 5 CY)	1	CY	$ 490.00	$ 490.00
50	Flowable Fill Excavatable (Min 5 CY)	1	CY	$ 480.00	$ 480.00
51	Dewatering Using Well Point Dewatering System, Equal to 25 Well Points	1	DAY	$ 6600.00	$ 6600.00
52	Dewatering Using Submersible Pump	1	EA	$ 2500.00	$ 2500.00
Items Below Shall Only Be Used for On-Call Routine Work NOT Covered By Other Pay Items					
Equipment Cost					

The City is seeking bids/proposals from qualified vendors for the items listed below in accordance with the terms, conditions, and specifications contained in this solicitation. Estimated quantities listed are for information and tabulation purposes only. No warranty or guarantee of quantities needed is given or implied. It is understood that the Contractor will furnish the City's needs as they arise. **CONTRACTOR SHALL PROVIDE UNIT PRICE FOR EACH LINE ITEM**

53	Excavator CAT 314 or Equal	1	DAY	$ 600.00	$ 600.00
54	Bobcat	1	DAY	$ 460.00	$ 460.00
55	Excavator / Backhoe CAT 225 or Equal	1	DAY	$ 600.00	$ 600.00
56	Wheel Loader CAT 926 or Equal	1	DAY	$ 530.00	$ 530.00
57	Backhoe Loader Combo CAT 416 or Equal	1	DAY	$ 520.00	$ 520.00
58	Bulldozer CAT D-3 or Equal	1	DAY	$ 560.00	$ 560.00
59	Double Drum Compactor Wacker W74 or Equal	1	DAY	$ 360.00	$ 360.00
60	Vibratory Plate Compactor VPR 1740 or Equal	1	DAY	$ 310.00	$ 310.00
61	Asphalt Roller	1	DAY	$ 620.00	$ 620.00
62	Vacuum Truck	1	DAY	$ 5100.00	$ 5100.00
63	Water Truck	1	DAY	$ 1100.00	$ 1100.00
64	Generator with Mass Lighting	1	DAY	$ 2000.00	$ 2000.00
65	Flat Bed Truck under 25,000 lbs GVW	1	DAY	$ 470.00	$ 470.00
66	18 Yard Dump Truck	1	DAY	$ 770.00	$ 770.00
67	1/2 Ton Pickup Truck under 10,000 lbs GVW	1	DAY	$ 240.00	$ 240.00
68	Cleaning/Television Inspection Equipment	1	DAY	$ 6500.00	$ 6500.00
69	CFM Air Compressor w/hose and hammer	1	DAY	$ 410.00	$ 410.00
70	6 inch x 6 inch Self Priming Silent Trash Pump	1	DAY	$ 410.00	$ 410.00
71	Ride-On Sweeper	1	DAY	$ 740.00	$ 740.00

The City is seeking bids/proposals from qualified vendors for the items listed below in accordance with the terms, conditions, and specifications contained in this solicitation. Estimated quantities listed are for information and tabulation purposes only. No warranty or guarantee of quantities needed is given or implied. It is understood that the Contractor will furnish the City's needs as they arise. **CONTRACTOR SHALL PROVIDE UNIT PRICE FOR EACH LINE ITEM**

72	Skid Steer Track Loader	1	DAY	$ 450.00	$ 450.00
73	Trench Shoring	1	DAY	$ 720.00	$ 720.00
74	Miscellaneous Small Tools	1	DAY	$ 160.00	$ 160.00
Labor					
75	Project Manager	100	HR	$ 110.00	$ 11,000.00
76	Superintendent	200	HR	$ 100.00	$ 20,000.00
77	Foreman	400	HR	$ 88.00	$ 35,200.00
78	Pipe Layer	400	HR	$ 58.00	$ 23,200.00
79	Laborer	400	HR	$ 40.00	$ 16,000.00
80	Operator	400	HR	$ 73.00	$ 29,200.00
81	Truck Driver	400	HR	$ 44.00	$ 17,600.00
Labor (Overtime)					
82	Project Manager (overtime)	25	HR	$ 170.00	$ 4250.00
83	Superintendent (overtime)	50	HR	$ 150.00	$ 7500.00
84	Foreman (overtime)	100	HR	$ 140.00	$ 14,000.00
85	Pipe Layer (overtime)	100	HR	$ 87.00	$ 8700.00
86	Laborer (overtime)	100	HR	$ 60.00	$ 6000.00
87	Operator (overtime)	100	HR	$ 110.00	$ 11,000.00
88	Truck Driver (overtime)	100	HR	$ 66.00	$ 6600.00

The City is seeking bids/proposals from qualified vendors for the items listed below in accordance with the terms, conditions, and specifications contained in this solicitation. Estimated quantities listed are for information and tabulation purposes only. No warranty or guarantee of quantities needed is given or implied. It is understood that the Contractor will furnish the City's needs as they arise. **CONTRACTOR SHALL PROVIDE UNIT PRICE FOR EACH LINE ITEM**

Bid Package 2 - Items Below Shall Be Used for ALL Emergency Repair Services

89	Expedited Mobilization (within 4 hours of request) (≤$100,000)	1	EA	$ 25,000.00	$ 25,000.00
90	Expedited Mobilization (within 24 hours of request) (≤$100,000)	1	EA	$ 17,000.00	$ 17,000.00
91	Expedited Mobilization (within 4 hours of request) (>$100,000)	1	EA	$ 38,000.00	$ 38,000.00
92	Expedited Mobilization (within 24 hours of request) (>$100,000)	1	EA	$ 23,000.00	$ 23,000.00
93	Flowable Fill Non-Excavatable (Min 5 CY)	1	CY	$ 310.00	$ 310.00
94	Flowable Fill Excavatable (Min 5 CY)	1	CY	$ 310.00	$ 310.00
95	Maintenance of Traffic (MOT) Plans	1	SHEET	$ 320.00	$ 320.00
96	Traffic control - Flagman (Each)	1	HR	$ 860.00	$ 860.00
97	Traffic control - Arrow Board (Each)	1	DAY	$ 25.00	$ 25.00
98	Traffic control - Barricade (Each)	1	DAY	$ 13.00	$ 13.00
99	Traffic Cones w/Reflective Marker (Each)	1	DAY	$ 6.30	$ 6.30
100	Advanced Warning / Detour Sign (Each)	1	DAY	$ 13.00	$ 13.00
101	Furnish and Install Steel Traffic Plates (Each)	1	EA	$ 130.00	$ 130.00
102	Dewatering Using Well Point Dewatering System, Equal to 25 Well Points	1	DAY	$ 2200.00	$ 2200.00
103	Dewatering Using Submersible Pump	1	DAY	$ 630.00	$ 630.00

Items Below Shall Be Used ONLY for Emergency Work NOT Covered By Other Pay Items

Equipment Cost

104	Excavator CAT 314 or Equal	1	DAY	$ 500.00	$ 500.00

The City is seeking bids/proposals from qualified vendors for the items listed below in accordance with the terms, conditions, and specifications contained in this solicitation. Estimated quantities listed are for information and tabulation purposes only. No warranty or guarantee of quantities needed is given or implied. It is understood that the Contractor will furnish the City's needs as they arise. **CONTRACTOR SHALL PROVIDE UNIT PRICE FOR EACH LINE ITEM**

105	Bobcat	1	DAY	$ 360.00	$ 360.00
106	Excavator / Backhoe CAT 225 or Equal	1	DAY	$ 500.00	$ 500.00
107	Wheel Loader CAT 926 or Equal	1	DAY	$ 430.00	$ 430.00
108	Backhoe Loader Combo CAT 416 or Equal	1	DAY	$ 430.00	$ 430.00
109	Bulldozer CAT D-3 or Equal	1	DAY	$ 470.00	$ 470.00
110	Double Drum Compactor Wacker W74 or Equal	1	DAY	$ 270.00	$ 270.00
111	Vibratory Plate Compactor VPR 1740 or Equal	1	DAY	$ 220.00	$ 220.00
112	Asphalt Roller	1	DAY	$ 520.00	$ 520.00
113	Vacuum Truck	1	DAY	$ 5000.00	$ 5000.00
114	Water Truck	1	DAY	$ 960.00	$ 960.00
115	Generator with Mass Lighting	1	DAY	$ 1900.00	$ 1900.00
116	Flat Bed Truck under 25,000 lbs GVW	1	DAY	$ 380.00	$ 380.00
117	18 Yard Dump Truck	1	DAY	$ 680.00	$ 680.00
118	1/2 Ton Pickup Truck under 10,000 lbs GVW	1	DAY	$ 140.00	$ 140.00
119	Cleaning/Television Inspection Equipment	1	DAY	$ 6400.00	$ 6400.00
120	CFM Air Compressor w/hose and hammer	1	DAY	$ 320.00	$ 320.00
121	6 inch x 6 inch Self Priming Silent Pump	1	DAY	$ 320.00	$ 320.00
122	Ride-On Sweeper	1	DAY	$ 640.00	$ 640.00
123	Skid Steer Track Loader	1	DAY	$ 350.00	$ 350.00

The City is seeking bids/proposals from qualified vendors for the items listed below in accordance with the terms, conditions, and specifications contained in this solicitation. Estimated quantities listed are for information and tabulation purposes only. No warranty or guarantee of quantities needed is given or implied. It is understood that the Contractor will furnish the City's needs as they arise. **CONTRACTOR SHALL PROVIDE UNIT PRICE FOR EACH LINE ITEM**

124	Trench Shoring	1	DAY	$ 130.00	$ 130.00
125	Miscellaneous Small Tools	1	DAY	$ 63.00	$ 63.00
Labor					
126	Project Manager	100	HR	$ 110.00	$ 11,000.00
127	Superintendent	200	HR	$ 100.00	$ 20,000.00
128	Foreman	400	HR	$ 88.00	$ 35,200.00
129	Pipe Layer	400	HR	$ 58.00	$ 23,200.00
130	Laborer	400	HR	$ 40.00	$ 16,000.00
131	Operator	400	HR	$ 73.00	$ 29,200.00
132	Truck Driver	400	HR	$ 44.00	$ 17,600.00
Labor (Overtime)					
133	Project Manager (overtime)	25	HR	$ 170.00	$ 4250.00
134	Superintendent (overtime)	50	HR	$ 150.00	$ 7500.00
135	Foreman (overtime)	100	HR	$ 140.00	$ 14,000.00
136	Pipe Layer (overtime)	100	HR	$ 87.00	$ 8700.00
137	Laborer (overtime)	100	HR	$ 60.00	$ 60.00
138	Operator (overtime)	100	HR	$ 110.00	$ 11,000.00
139	Truck Driver (overtime)	100	HR	$ 66.00	$ 6600.00
Bid Package 3 – Reuse Pipe Repair					

The City is seeking bids/proposals from qualified vendors for the items listed below in accordance with the terms, conditions, and specifications contained in this solicitation. Estimated quantities listed are for information and tabulation purposes only. No warranty or guarantee of quantities needed is given or implied. It is understood that the Contractor will furnish the City's needs as they arise. **CONTRACTOR SHALL PROVIDE UNIT PRICE FOR EACH LINE ITEM**					
140	Excavate and expose existing 24-inch reclaimed water pipe having an invert depth of approximately 5.5 feet below grade in the vicinity of 12th Avenue and S. North Lake Drive	1	LS	$ 55,000.00	$ 55,000.00
141	Excavate and expose existing 24-inch reclaimed water pipe having an invert depth of approximately 7.5 feet below grade in the vicinity of 12th Avenue and Tyler Street	1	LS	$ 58,000.00	$ 58,000.00
142	Excavate and expose existing 24-inch reclaimed water pipe having an invert depth of approximately 8.5 feet below grade in the vicinity of 12th Avenue and Harrison Street	1	LS	$ 58,000.00	$ 58,000.00
143	Excavate and expose existing 24-inch reclaimed water pipe having an invert depth of approximately 7.5 feet below grade in the vicinity of 12th Avenue and N. South Lake Drive	1	LS	$ 58,000.00	$ 58,000.00
144	Install 24-inch liner end seal	1	EA	$ 4300.00	$ 4300.00
145	Install 24-inch pressure coupling	1	EA	$ 4300.00	$ 4300.00
146	Install 24-inch restraint harness	1	EA	$ 4300.00	$ 4300.00
ALLOWANCES					
147	Permit and Fees Allowance	1	EA	$75,000	$75,000
148	Testing Allowance	1	EA	$75,000	$75,000
149	Material / Equipment Supply/Subcontractor Allowance	1	EA	$400,000	$400,000
150	Owner Allowance	1	EA	$200,000	$200,000
151	Indemnification	1	EA	$10	$10

The City is seeking bids/proposals from qualified vendors for the items listed below in accordance with the terms, conditions, and specifications contained in this solicitation. Estimated quantities listed are for information and tabulation purposes only. No warranty or guarantee of quantities needed is given or implied. It is understood that the Contractor will furnish the City's needs as they arise. **CONTRACTOR SHALL PROVIDE UNIT PRICE FOR EACH LINE ITEM**

GRAND TOTAL BASE BID PRICE (FROM BID ITEM NO.1 THROUGH NO. 151):

$ 1,748,870.30

GRAND TOTAL BASE BID PRICE (in words): $ one million seven hundred forty eight thousand eight hundred seventy dollars and thirty cents

NOTES

1. **REFER TO SECTION 01025 FOR ADDITIONAL DESCRIPTION OF BASE BID ITEMS.**
2. **THE CITY WILL EVALUATE THE BID PROPOSALS AND DETERMINE THE LOWEST, RESPONSIVE, RESPONSIBLE BIDDER(S) FOR THE TOTAL BASE BID (ITEMS 1 THROUGH 151). IT IS THE CITY'S INTENT TO AWARD TO MULTIPLE CONTRACTORS FOR THE PROJECT BASED UPON THE TOTAL BASE BID.**
3. **WORK ORDERS FOR ON-CALL AND EMERGENCY REPAIR SERVICES WILL BE ISSUED AS REPAIR WORK IS IDENTIFIED BY THE CITY.**

SECTION 00410

APPROVED BID BOND

(Construction)

STATE OF FLORIDA

KNOW ALL MEN BY THESE PRESENTS:
That we Ric-Man International, Inc., as Principal, and Arch Insurance Company, as Surety, are held and firmly bound unto the City of Hollywood in the sum of _____ Five Percent of the Total Bid Price Dollars ($ 5% of the T.B.P.) lawful money of the United States, amounting to **5%** of the total Bid Price, for the payment of said sum, we bind ourselves, our heirs, executors, administrators, and successors, jointly and severally, firmly by these presents.

THE CONDITION OF THIS OBLIGATION IS SUCH, that whereas the principal has submitted the accompanying bid, dated August 3 20 22 , for

ON-CALL AND EMERGENCY WATER AND SEWER UTILITY REPAIR SERVICES

Bid No.: IFB-4730-22-OT

NOW, THEREFORE, if the principal shall not withdraw said bid within 90 days after date of the same and shall within ten days after the prescribed forms are presented to him for signature, enter into a written contract with the CITY, in accordance with the bid as accepted, and give bond with good and sufficient surety or sureties, and provide the necessary Insurance Certificates as may be required for the faithful performance and proper fulfillment of such Contract, then this obligation shall be null and void.

In the event of the withdrawal of said bid within the specified period, or the failure to enter into such contract and give such bond and insurance within the specified time, the principal and the surety shall pay to the City of Hollywood the difference between the amount specified in said bid and such larger amount for which the City of Hollywood may in good faith contract with another party to perform the work and/or supply the materials covered by said bid.

IN WITNESS WHEREOF, the above bound parties have executed this statement under their several seals this 2nd day of August, 2022, the name and corporate seal of each corporate party being hereto affixed and these presents duly signed by its undersigned representative, pursuant to authority of its governing body.

WHEN THE PRINCIPAL IS AN INDIVIDUAL:

Signed, sealed and delivered in the presence of:

_____	_____
Witness	Signature of Individual
_____	
Address	
_____	_____
	Printed Name of Individual

_____
Witness

_____
Address

_____

WHEN THE PRINCIPAL IS A CORPORATION:

Attest:

Secretary

Ric-Man International, Inc.
Name of Corporation

1545 NW 27th Ave
Business Address

Pompano Beach, FL 33069

By:
(Affix Corporate Seal)

MICHAEL JANKOWSKI
Printed Name

PRESIDENT
Official Title

CERTIFICATE AS TO CORPORATE PRINCIPAL

I, ANDRES DIAZ, certify that I am the secretary of the Corporation named as Principal in the attached bond; that MICHAEL JANKOWSKI who signed the said bond on behalf of the Principal, was then PRESIDENT of said Corporation; that I know his signature, and his signature thereto is genuine and that said bond was duly signed, sealed and attested for and on behalf of said Corporation by authority of its governing body.

(SEAL)
Secretary

TO BE EXECUTED BY CORPORATE SURETY:

Witness:
~~Attest~~:

~~Secretary~~
Tai Babilonia, Surety Account Representative

Arch Insurance Company
Corporate Surety
Three Parkway, Suite 1500
Business Address
Philadelphia, PA 19102
BY:

(Affix Corporate Seal)

Colette R. Chisholm, FL License # W026633
Attorney-in-Fact

Name of Local Agency
Alliant Insurance Services, Inc.
Business Address
2701 N. Rocky Point Drive, Suite 960 Tampa, FL 33607

STATE OF ~~FLORIDA~~ New York

Before me, a Notary Public, duly commissioned, qualified and acting, personally appeared, Colette R. Chisholm to me well known, who being by me first duly sworn upon oath says that he is the attorney-in-fact for the Arch Insurance Company and that the has been authorized by Arch Insurance Company to execute the forgoing bond on behalf of the CONTRACTOR named therein in favor of the City of Hollywood, Florida. Subscribed and sworn to before me this 2nd day of August, 20 22

Notary Public, State of ~~Florida~~ New York

KAROLYNNE RAMIREZ
NOTARY PUBLIC, STATE OF NEW YORK
Registration No. 01RA6426462
Qualified in New York County
Commission Expires December 13, 2025

My Commission Expires:

- END OF SECTION -

This Power of Attorney limits the acts of those named herein, and they have no authority to bind the Company except in the manner and to the extent herein stated. Not valid for Note, Loan, Letter of Credit, Currency Rate, Interest Rate or Residential Value Guarantees.

POWER OF ATTORNEY

Know All Persons By These Presents:
That the Arch Insurance Company, a corporation organized and existing under the laws of the State of Missouri, having its principal administrative office in Jersey City, New Jersey (hereinafter referred to as the "Company") does hereby appoint:

Camille Maitland, Colette R. Chisholm, Dana Granice, Desiree Cardlin, George O. Brewster, Gerard S. Macholz, Katherine Acosta, Michelle Wannamaker, Nelly Renchiwich, Rita Losquadro, Robert T. Pearson, Susan Lupski, Thomas Bean and Vincent A. Walsh of Uniondale, NY (EACH)

its true and lawful Attorney(s)in-Fact, to make, execute, seal, and deliver from the date of issuance of this power for and on its behalf as surety, and as its act and deed: Any and all bonds, undertakings, recognizances and other surety obligations, in the penal sum not exceeding Ninety Million Dollars ($90,000,000.00).
This authority does not permit the same obligation to be split into two or more bonds In order to bring each such bond within the dollar limit of authority as set forth herein.

The execution of such bonds, undertakings, recognizances and other surety obligations in pursuance of these presents shall be as binding upon the said Company as fully and amply to all intents and purposes, as if the same had been duly executed and acknowledged by its regularly elected officers at its principal administrative office in Jersey City, New Jersey.

This Power of Attorney is executed by authority of resolutions adopted by unanimous consent of the Board of Directors of the Company on December 10, 2020, true and accurate copies of which are hereinafter set forth and are hereby certified to by the undersigned Secretary as being in full force and effect:
"**VOTED**, That the Chairman of the Board, the President, or the Executive Vice President, or any Senior Vice President, of the Surety Business Division, or their appointees designated in writing and filed with the Secretary, or the Secretary shall have the power and authority to appoint agents and attorneys-in-fact, and to authorize them subject to the limitations set forth in their respective powers of attorney, to execute on behalf of the Company, and attach the seal of the Company thereto, bonds, undertakings, recognizances and other surety obligations obligatory in the nature thereof, and any such officers of the Company may appoint agents for acceptance of process."

This Power of Attorney is signed, sealed and certified by facsimile under and by authority of the following resolution adopted by the unanimous consent of the Board of Directors of the Company on December 10, 2020:

VOTED, That the signature of the Chairman of the Board, the President, or the Executive Vice President, or any Senior Vice President, of the Surety Business Division, or their appointees designated in writing and filed with the Secretary, and the signature of the Secretary, the seal of the Company, and certifications by the Secretary, may be affixed by facsimile on any power of attorney or bond executed pursuant to the resolution adopted by the Board of Directors on December 10, 2020, and any such power so executed, sealed and certified with respect to any bond or undertaking to which it is attached, shall continue to be valid and binding upon the Company. **In Testimony Whereof**, the Company has caused this instrument to be signed and its corporate seal to be affixed by their authorized officers, this **28th day of March, 2022**.

Attested and Certified

Regan A. Shulman, Secretary

Arch Insurance Company
CORPORATE SEAL 1971 Missouri

Arch Insurance Company

Stephen C. Ruschak, Executive Vice President

STATE OF PENNSYLVANIA SS
COUNTY OF PHILADELPHIA SS

I, **Michele Tripodi**, a Notary Public, do hereby certify that Regan A. Shulman and Stephen C. Ruschak personally known to me to be the same persons whose names are respectively as Secretary and Executive Vice President of the Arch Insurance Company, a Corporation organized and existing under the laws of the State of Missouri, subscribed to the foregoing instrument, appeared before me this day in person and severally acknowledged that they being thereunto duly authorized signed, sealed with the corporate seal and delivered the said instrument as the free and voluntary act of said corporation and as their own free and voluntary acts for the uses and purposes therein set forth.

Commonwealth of Pennsylvania - Notary Seal
MICHELE TRIPODI, Notary Public
Philadelphia County
My Commission Expires July 31, 2025
Commission Number 1166522

Michele Tripodi, Notary Public
My commission expires 07/31/2025

CERTIFICATION

I, **Regan A. Shulman**, Secretary of the Arch Insurance Company, do hereby certify that the attached **Power of Attorney dated March 28, 2022** on behalf of the person(s) as listed above is a true and correct copy and that the same has been in full force and effect since the date thereof and is in full force and effect on the date of this certificate; and I do further certify that the said Stephen C. Ruschak, who executed the Power of Attorney as Executive Vice President, was on the date of execution of the attached Power of Attorney the duly elected Executive Vice President of the Arch Insurance Company.
IN TESTIMONY WHEREOF, I have hereunto subscribed my name and affixed the corporate seal of the Arch Insurance Company on this 2nd **day of** August **, 20** 22 .

Regan A. Shulman, Secretary

This Power of Attorney limits the acts of those named therein to the bonds and undertakings specifically named therein and they have no authority to bind the Company except in the manner and to the extent herein stated.

PLEASE SEND ALL CLAIM INQUIRIES RELATING TO THIS BOND TO THE FOLLOWING ADDRESS:
Arch Insurance – Surety Division
3 Parkway, Suite 1500
Philadelphia, PA 19102

Arch Insurance Company
CORPORATE SEAL 1971 Missouri

To verify the authenticity of this Power of Attorney, please contact Arch Insurance Company at SuretyAuthentic@archinsurance.com
Please refer to the above named Attorney-In-Fact and the details of the bond to which the power is attached.

SECTION 00420

INFORMATION REQUIRED FROM BIDDERS

GENERAL INFORMATION

The Bidder shall furnish the following information. Failure to comply with this requirement may cause its rejection. Additional sheets shall be attached as required.

1. Contractor's Name/Address: RIC-MAN INTERNATIONAL,
1545 NW 27TH AVE
POMPANO BEACH, FL 33069

2. Contractor's Telephone Number: 954-426-1042
and e-mail address: BID@RIC-MAN.US

3. Contractor's License (attach copy): SEE ATTACHED LICENSE
Primary Classification:
Broward County License Number (attach copy):

4. Number of years as a Contractor in construction work of the type involved in this Contract: 39

5. List the names and titles of all officers of Contractor's firm:
MICHEAL JANKOWSKI- PRESIDENT, PAUL JANKOWSKI- V PRESIDENT, LISA JANKOWSKI-
TREASURER, ANDRES DIAZ- CORP SECRETARY

6. Name of person who inspected site or proposed work for your firm:
Name: N/A
Date of Inspection: N/A

7. What is the last project of this nature you have completed?
SEE COMPLETED PROJECTS LIST

8. Have you ever failed to complete work awarded to you; if so, where and why?
NO

9. Name three (3) individuals or corporations for which you have performed work and to which you refer:

SEE REFERENCE LIST

10. List the following information concerning all contracts on hand as of the date of submission of this proposal (in case of co-venture, list the information for all coventures).

Name of Project	City	Total Contract Value	Contracted Date of Completion	% Completion to Date
SEE CURRENT PROJECT LIST				

(Continue list on inset sheet, if necessary)

11. What equipment do you own that is available for the work?

SEE EQUIPMENT LIST

12. What equipment will you purchase for the proposed work?

NONE ANTICIPATED

NOTE:
If requested by CITY, the Bidder shall furnish a notarized financial statement, references and other information, sufficiently comprehensive to permit an appraisal of its current financial condition.

LIST OF SUBCONTRACTORS

The Bidder shall list below the name and address of each Subcontractor who will perform work under this Contract in excess of one-half percent of the total bid price, and shall also list the portion of the work which will be done by such Subcontractor. After the opening of Proposals, changes or substitutions will be allowed with written approval of the City of Hollywood. Subcontractors must be properly licensed and hold a valid Hollywood Certificate of Competency.

	Work to be Performed	**Subcontractor's Name / Address**
1.	TBD	
2.		
3.		
4.		
5.		
6.		
7.		
8.		
9.		
10.		

NOTE: Attach additional sheets if required.

- END OF SECTION -

SECTION 004350

LOCAL PREFERENCE

(EXHIBIT "A")

Pursuant to §38.50 of the City of Hollywood *Code of Ordinances*, the City shall grant a preference to local Hollywood vendors if their initial bid is within 5% of the bid of the lowest responsive responsible bidder that is a non-local Hollywood vendor. The preference shall allow the local Hollywood vendor to submit a second and final offer, which must be at least 1% less than the bid of the lowest responsible responsive non-local Hollywood vendor to be awarded. The local Hollywood vendor shall have the burden of demonstrating that it maintains a permanent place of business with full-time employees within the City limits and has done so for a minimum of one (1) year prior to the date of issuance of a bid or proposal solicitation within Hollywood, Florida. All supporting documentation (e.g. City of Hollywood valid local business tax receipt) for local preference eligibility must be received with the bid package prior to the bid opening date and time.

SECTION 00495

TRENCH SAFETY FORM

This form must be completed and signed by the Bidder.

Failure to complete this form may result in the bid being declared non-responsive.

Bidder acknowledges that the Florida Trench Safety Act, Section 553.60 et. seq., which became effective October 1, 1990, shall be in effect during the period of construction of the project. The Bidder by signing and submitting the bid is, in writing, assuring that it will perform any trench excavation in accordance with applicable trench safety standards. The Bidder further identifies the following separate item of cost of compliance with the applicable trench safety standards as well as the method of compliance:

Method of Compliance	Cost
SLOPE BANKS/ TRENCH BOX	

Total $ 2.50 PER FOOT

Bidder acknowledges that this cost is included in the applicable items of the Proposal and in the Grand Total Bid Price. Failure to complete the above will result in the bid being declared non-responsive.

The Bidder is, and the Owner and Engineer are not, responsible to review or assess Bidder's safety precautions, programs or costs, or the means, methods, techniques or technique adequacy, reasonableness of cost, sequences or procedures of any safety precaution, program or cost, including but not limited to, compliance with any and all requirements of Florida Statute Section 553.60 et. seq. cited as the "Trench Safety Act". Bidder is, and the owner and Engineer are not, responsible to determine if any safety related standards apply to the project, including but not limited to, the "Trench Safety Act".

Witness Signature

Hamill Andrade
Witness Printed Name

1545 NW 27 Ave Pompano Beach FL 33069
Witness Address

7/28/22
Date

Contractor's Signature

MICHAEL JANKOWSKI
Printed Name

PRESIDENT
Title

7/28/22
Date

- END OF SECTION -

SECTION 00500

CONTRACT

THIS AGREEMENT, made and entered into, this 4 day of Jan, A.D., 2023, by and between the CITY OF HOLLYWOOD, Florida, a municipal corporation of the State of Florida, party of the first part, (hereinafter sometimes called the "CITY"), and

RIC-MAN INTERNATIONAL, INC.

party of the second part (hereinafter sometimes called the "CONTRACTOR").

WITNESSETH: The parties hereto, for the considerations herein- after set forth, mutually agree as follows:

Article 1. Scope of Work: The CONTRACTOR shall furnish all labor, materials, and equipment and perform all work in the manner and form provided by the Contract Documents, for:

ON-CALL AND EMERGENCY WATER AND SEWER UTILITY REPAIR SERVICES
Bid No.: IFB-4730-22-OT

Article 2. The Contract Sum: The CITY shall pay to the CONTRACTOR, for the faithful performance of the Contract, in lawful money of the United States of America, and subject to additions and deductions as provided in the Contract Documents, as follows:

Based upon the prices shown in the Proposal heretofore submitted to the CITY by the CONTRACTOR, a copy of said Proposal being a part of these Contract Documents, the aggregate amount of this Contract being the sum of **One Million with 0/100 Dollars ($1,000,000.00)**

Article 3. Partial and Final Payments: In accordance with the provisions fully set forth in the "General Conditions" of the "Specifications", and subject to additions and deductions as provided, the CITY shall pay the CONTRACTOR as follows:

(a) On the 15th day, or the first business day thereafter, of each calendar month, the CITY shall make partial payments to the CONTRACTOR on the basis of a duly certified and approved estimate of work performed during the preceding calendar month by the CONTRACTOR, less five percent (5%) of the amount of such estimate which is to be retained by the CITY until all work has been performed strictly in accordance with this Agreement and until such work has been accepted by the CITY; The parties' rights and obligations regarding retainage are further specified in Sections 218.735 and 255.078, Florida Statutes, as applicable.

(b) Upon submission by the CONTRACTOR of evidence satisfactory to the CITY that all payrolls, material bills and other costs incurred by the CONTRACTOR in connection with the construction of the WORK have been paid in full, and also, after all guarantees that may be required in the Specifications have been furnished and are found acceptable by the CITY, final payment on account of this Agreement shall be made within sixty (60) days after completion by the CONTRACTOR of all work covered by this Agreement and acceptance of such work by the ENGINEER and approved by the CITY.

Article 4. Time of Completion: The CONTRACTOR shall commence work to be performed under this Contract within ten (10) consecutive calendar days after date of written Notice To Proceed and shall fully complete the Contract in accordance within the Contract Documents and meet all intermediate milestone completion dates required after said date of written notice as set forth in the Proposal, as may be modified

by Instructions to Bidders, and stated in the Notice to Proceed.

It is mutually agreed between the parties hereto, that time is the essence, and in the event that construction of the WORK is not completed within the Contract Time and per intermediate dates, as may have been modified solely in accordance with the General Conditions of this Contract, that from the compensation otherwise to be paid to the CONTRACTOR, the CITY is authorized and shall retain, for each day thereafter, Sundays and holidays included, the sum set forth in the Supplementary General Conditions of this Contract as liquidated damages sustained by the CITY in the event of such default by the CONTRACTOR, or shall withhold such compensation for actual and consequential damages as my be stated therein or contemplated therefrom.

Article 5. Additional Bond: It is further mutually agreed between the parties hereto, that if, at any time after the execution of this Agreement and the Payment and Performance Bonds required herein for the express purpose of assuring the faithful performance of the Contractor's work hereto attached, the CITY shall deem the surety or sureties' to be unsatisfactory, or, if for any reason, said bonds cease to be adequate to cover the performance of the work, the CONTRACTOR shall, at his expense, within five (5) days after receipt of notice from the CITY furnish an additional bond or bonds in such form and amount, and with such surety or sureties as shall be satisfactory to the CITY. In such event, no further payment to the CONTRACTOR shall be deemed to be due under this agreement until such new or additional security for the faithful performance of the work shall be furnished in manner and form satisfactory to the CITY.

Article 6. Contract Documents: All of the documents hereinafter listed form the Contract and they are as fully a part of the Contract as if hereto attached, or repeated in this Agreement:

1. Notice to Bidders
2. Instruction to Bidders
3. Proposal
4. Proposal Bid Form
5. Bid Bond
6. Information Required from Bidders
7 Local Preference (Exhibit A)
8. Trench Safety Form (N/A)
9. Contract
10. Performance Bond
11. Payment Bond
12. General Conditions
13. Supplementary General Conditions
14 Addenda
15. Specifications
16. Drawings

Article 7. The rate of wages and fringe benefits, or cash equivalent, for all laborers, mechanics and apprentices employed by any contractor or subcontractor on the work covered by the contract shall be not less than the prevailing rate of wages and fringe benefit payments or cash equivalent for similar skills or classifications of work as established by the General Wage Decision by the United States Department of Labor for Broward County, Florida that is in effect prior to the date the city issues its invitation for bids. If the General Wage Decision fails to provide for a fringe benefit rate for any worker classification, then the fringe benefit rate applicable to the worker classification shall be the fringe benefit rate applicable to the worker classification with a fringe benefit rate that has a basic hourly wage closest in dollar amount to the worker classification for which no fringe benefit rate has been provided.

Article 8. No additional work or extras shall be performed unless the same be duly authorized by appropriate action of the CITY.

Article 9. That in the event either party brings suit for enforcement of disagreement, the prevailing party shall be entitled to attorney's fees and court costs in addition to any other remedy afforded by law.

Article 10. The CONTRACTOR shall guarantee the complete project against poor workmanship and faulty materials for a period of twelve (12) months after final payment and shall immediately correct any defects which may appear during this period upon notification by the CITY or the ENGINEER.

Article 11. The making and acceptance of the final payment shall constitute a waiver of all claims by the

CONTRACTOR, except those previously made and still unsettled.

Article 12. Contract Term: The initial term of this contract shall be for a period of two (2) years beginning upon the notice to proceed. The CITY may renew three times this contract for one (1) additional one (1) year period subject to City's option, vendor acceptance, satisfactory performance, and determination that renewal will be in the best interest of the CITY.

****

IN WITNESS WHEREOF the parties hereto have executed this Agreement on the day and date first above written in three (3) counterparts, each of which shall, without proof or accounting for the other counterparts, be deemed an original contract:

THE CITY OF HOLLYWOOD, FLORIDA
Party of the First Part

By:_____(SEAL)
JOSH LEVY, MAYOR

ATTEST:
PATRICIA A. CERNY, MMC, CITY CLERK

V26

****

CONTRACTOR
Party of the Second Part

WHEN THE CONTRACTOR IS AN INDIVIDUAL:

Signed, sealed and delivered in the presence of:

_____ _____ (SEAL)
(Witness) (Signature of Individual)

_____ _____
(Witness) (Signature of Individual)

****

WHEN THE CONTRACTOR IS A SOLE PROPRIETORSHIP OR OPERATES UNDER A TRADE NAME:

Signed, sealed and delivered in the presence of:

_____ _____
(Witness) (Name of Firm)

_____ _____ (SEAL)
(Witness) (Signature of Individual)

****

WHEN THE CONTRACTOR IS A PARTNERSHIP:

_____ _____
(Witness) (Name of Firm) a Partnership

_____ BY:_____(SEAL)
(Witness) (Partner)

****

WHEN THE CONTRACTOR IS A CORPORATION:

Attest:

Secretary Andres Diaz

Ric-Man International, Inc

(Correct Name of Corporation)

BY: _____ (SEAL)

President

****

APPROVED AS TO FORM AND LEGAL SUFFICIENCY for the use and reliance of the City of Hollywood, Florida only:

By _____

Douglas R. Gonzales
City Attorney

APPROVED AS TO FINANCE:

By _____

David E. Keller
Financial Services Director

CERTIFICATE

STATE OF FLORIDA)
COUNTY OF BROWARD)

I HEREBY CERTIFY that a meeting of the Board of Directors of Ric-Man International, a corporation under the laws of the State of Fl, was held on Dec. 30, 2019, and the following resolution was duly passed and adopted:

> "RESOLVED, that Michael Jankowski as _____ President of the corporation, be and he is hereby authorized to execute the contracts on behalf of this corporation, and that his execution thereof, attested by the Secretary of the corporation and with corporate seal affixed, shall be the official act and deed of this corporation."

I further certify that said resolution is now in full force and effect.

IN WITNESS WHEREOF, I have hereunto set my hand and affixed the official seal of the corporation, this 17 day of November, 2022.

Secretary Andres Diaz

- END OF SECTION -

FRONT PAGE

CONTRACTOR'S PERFORMANCE AND PAYMENT BOND
(Public Work)

Bond No.:	SU1150322
Contractor Name:	Ric-Man International, Inc.
Contractor Address:	1545 NW 27th Ave, Pompano Beach, FL 33069
Contractor Phone No.:	954-426-1042
Surety Company:	Arch Insurance Company

Owner Name:	City of Hollywood
Owner Address:	2600 Hollywood Blvd, Hollywood, FL, 33022
Owner Phone No.:	954-921-3930

(If different from property Owner, or Dual Obligee) Obligee Address:	* Same as above
Obligee Phone No.:	* Same as above
Bond Amount:	$1,000,000.00

Contract No. (if applicable)	IFB-4730-22-OT
Description of Work:	On-Call & Emergency Water AND Sewer Utility Repair Services
Project Location:	Hollywood, FL

This Bond has been furnished to comply with the requirements of F.S. 255.05. This bond is hereby amended such that all provisions and limitations, including conditions, notice and time limitations of F.S. 255.05 are incorporated herein by reference. Any provision of this bond which conflicts with or purports to grant broader or more expanded coverage in excess of the minimum of the applicable statute shall be deemed deleted herefrom. This bond is a statutory bond, not a common law bond.

This is the front page of the Performance/Payment Bond(s) regardless of preprinted numbers on other pages issued in compliance with Florida Statute 255.05.

SECTION 00610

PERFORMANCE BOND

KNOW ALL MEN BY THESE PRESENTS:

That we Ric-Man International, Inc. (Name) 1545 NW 27th Ave Pompano Beach , FL 33069 (Address) (954) 426-1042 (Tel. No.),

as Principal, and Arch Insurance Company (Name) Three Parkway, Suite 1500, Philadelphia, PA 19102 (Address) (321) 400-6024 (Tel. No.)

as Surety, are held and firmly bound unto the City of Hollywood in the sum of One Million and 00/100 Dollars ($ 1,000,000.00), for the payment of said sum we bind ourselves, our heirs, executors, administrators and assigns, jointly and severally, for the faithful performance of a certain written contract, dated the 17th day of November ,20 22 entered into between the Principal and the City of Hollywood, Florida, for the installation of the **ON-CALL AND EMERGENCY WATER AND SEWER UTILITY REPAIR SERVICES, Bid No. IFB-4730-22-OT.**

A copy of said Contract, No. **IFB-4730-22-OT**, is incorporated herein by reference and is made a part hereof as if fully copied herein.

NOW, THEREFORE, THE CONDITIONS OF THIS OBLIGATION ARE SUCH, that if the Principal shall in all respects comply with the terms and conditions of said Contract and his obligations thereunder, including all of the Contract Documents (that include the Notice to Bidders, Instructions to Bidders, Proposal, Proposal Bid Form, Basis of Payment, Approved Bid Bond, Trench Safety Form, Information Required from Bidders, Contract, Performance Bond, Payment Bond, General and Supplementary General Conditions, Technical Specifications, Addenda and Drawings), therein referred to and made a part thereof, and such alterations as may be made in said Drawings and Specifications as therein provided for, and shall indemnify and save harmless the City of Hollywood against and from all expenses, damages, injury or conduct, want of care of skill, negligence or default, including patent infringement on the part of said Principal, his agents or employees, in the execution or performance of said Contract, including errors in the Drawings furnished by said Principal, and further, if the Principal shall promptly make payments to all who supply him, with labor and/or materials, used directly or indirectly by the Principal in the prosecution of the work provided for in said Contract, then this obligation shall be null and void; otherwise, the Principal and Surety, jointly and severally, agree to pay the City of Hollywood any difference between the sum that the City of Hollywood may be obliged to pay for the completion of said work, by Contract or otherwise, and the sum that the City of Hollywood would have been obliged to pay for the completion said work had the Principal properly executed all of the provisions of said Contract, and any damages, whether direct, indirect, or consequential, which the City of Hollywood may incur as a result of the failure of the said Principal to properly execute all of the provisions of said Contract.

AND, the said Principal and Surety hereby further bind themselves, their successors, executors, administrators and assigns, jointly and severally, that they will amply and fully protect the City of Hollywood against, and will pay any and all amounts, damages, costs

and judgments which may be recovered against or which the Owner may be called upon to pay to any person or corporation by reason of any damage arising from the performance of the said work, repair or maintenance thereof, or the manner of doing the same, or his agents or his servants, or the infringements of any patent rights by reason of the use of any material furnished or work done, as aforesaid or otherwise.

AND, the said Surety, for value received, hereby stipulates and agrees that no change, extension of time, alteration or addition to the terms of the Contract or to the work to be performed thereunder or the Specifications and Drawings accompanying the same, shall in any way affect its obligations on this Bond, and it does hereby waive notice of any such change, extension of time, alteration or addition to the terms of the Contract or to the work or to the Specifications and Drawings.

WHEN THE PRINCIPAL IS AN INDIVIDUAL:

Signed, sealed and delivered in the presence of:

_____ _____

(Witness) (Signature of Individual)

_____ _____

(Address) (Printed Name of Individual)

_____

(Witness)

_____

(Address)

WHEN THE PRINCIPAL IS A SOLE PROPRIETORSHIP OR OPERATES UNDER A TRADE NAME:

Signed, sealed and delivered in the presence of:

_____ _____

(Witness) (Name of Firm)

By: _____

_____ (Seal)

(Address) (Signature of Individual)

_____

(Witness)

_____

Address

****

WHEN THE PRINCIPAL IS A PARTNERSHIP:

Signed, sealed and delivered in the presence of:

_____ (Witness)

_____ (Name of Partnership)

_____ (Address)

By: _____ (Seal) (Partner)

_____ (Witness)

_____ (Printed Name of Partner)

_____ Address

****

WHEN THE PRINCIPAL IS A CORPORATION:

Attest:

_____ (Secretary) Andres Diaz

Ric-Man International, Inc. (Name of Corporation)

By: _____ (Seal)

(Affix Corporate Seal)

Michael Jankowski (Printed Name)

President (Official Title)

CERTIFICATE AS TO CORPORATE PRINCIPAL

I, Andres Diaz, certify that I am the Secretary of the corporation named as Principal in the within bond; that Michael Jankowski, who signed the said bond on behalf of the Principal was then President of said corporation; that I know his signature, and his signature thereto is genuine; and that said Bond was duly signed, sealed and attested for and on behalf of said corporation by authority of its governing body.

_____ (SEAL)
Secretary Andres Diaz

TO BE EXECUTED BY CORPORATE SURETY

Witness

~~Attest~~:

~~(Secretary)~~

Surety Account Representative

Arch Insurance Company

(Corporate Surety)

Three Parkway, Suite 1500

(Business Address)

Philadelphia, PA 19102

By:

(Affix Corporate Seal)

Ian Williams

(Attorney-In-Fact)

Alliant Insurance Services, Inc.

(Name of Local Agency)

333 Earle Ovington Boulevard, Suite 700

(Business Address)

Uniondale, NY 11553

STATE OF ~~FLORIDA~~ New York

Before me, a Notary Public, duly commissioned, qualified and acting, personally appeared, Ian Williams to me well known, who being by me first duly sworn upon oath, says that he is the attorney-in-fact for the Arch Insurance Company and that he has been authorized by Arch Insurance Company to execute the foregoing bond on behalf of the CONTRACTOR named therein in favor of the City of Hollywood, Florida.

Subscribed and sworn to before me this 17th day of November, 20 22.

KAROLYNNE RAMIREZ
NOTARY PUBLIC, STATE OF NEW YORK
Registration No. 01RA6426462
Qualified in New York County
Commission Expires December 13, 2025

Notary Public, State of ~~Florida~~ New York

My Commission Expires: December 13, 2025

****

APPROVED AS TO FORM
AND LEGAL SUFFICIENCY
for the use and reliance of the
City of Hollywood, Florida only:

By
Douglas R. Gonzales
City Attorney

APPROVED AS TO FINANCE:

By
David E. Keller
Financial Services Director

- END OF SECTION -

This Power of Attorney limits the acts of those named herein, and they have no authority to bind the Company except in the manner and to the extent herein stated. Not valid for Note, Loan, Letter of Credit, Currency Rate, Interest Rate or Residential Value Guarantees.

POWER OF ATTORNEY

Know All Persons By These Presents:
That the Arch Insurance Company, a corporation organized and existing under the laws of the State of Missouri, having its principal administrative office in Jersey City, New Jersey (hereinafter referred to as the "Company") does hereby appoint:

Camille Maitland, Colette R. Chisholm, Dana Granice, Desiree Cardlin, Ian Williams, George O. Brewster, Gerard S. Macholz, Katherine Acosta, Michelle Wannamaker, Nelly Renchiwich, Robert T. Pearson, Susan Lupski, Thomas Bean and Vincent A. Walsh of Uniondale, NY (EACH)

its true and lawful Attorney(s)in-Fact, to make, execute, seal, and deliver from the date of issuance of this power for and on its behalf as surety, and as its act and deed: Any and all bonds, undertakings, recognizances and other surety obligations, in the penal sum not exceeding Ninety Million Dollars (90,000,000.00).
This authority does not permit the same obligation to be split into two or more bonds In order to bring each such bond within the dollar limit of authority as set forth herein.

The execution of such bonds, undertakings, recognizances and other surety obligations in pursuance of these presents shall be as binding upon the said Company as fully and amply to all intents and purposes, as if the same had been duly executed and acknowledged by its regularly elected officers at its principal administrative office in Jersey City, New Jersey.

This Power of Attorney is executed by authority of resolutions adopted by unanimous consent of the Board of Directors of the Company on December 11, 2020, true and accurate copies of which are hereinafter set forth and are hereby certified to by the undersigned Secretary as being in full force and effect:

"VOTED, That the Chairman of the Board, the President, or the Executive Vice President, or any Senior Vice President, of the Surety Business Division, or their appointees designated in writing and filed with the Secretary, or the Secretary shall have the power and authority to appoint agents and attorneys-in-fact, and to authorize them subject to the limitations set forth in their respective powers of attorney, to execute on behalf of the Company, and attach the seal of the Company thereto, bonds, undertakings, recognizances and other surety obligations obligatory in the nature thereof, and any such officers of the Company may appoint agents for acceptance of process."

This Power of Attorney is signed, sealed and certified by facsimile under and by authority of the following resolution adopted by the unanimous consent of the Board of Directors of the Company on December 11, 2020:

VOTED, That the signature of the Chairman of the Board, the President, or the Executive Vice President, or any Senior Vice President, of the Surety Business Division, or their appointees designated in writing and filed with the Secretary, and the signature of the Secretary, the seal of the Company, and certifications by the Secretary, may be affixed by facsimile on any power of attorney or bond executed pursuant to the resolution adopted by the Board of Directors on December 11, 2020, and any such power so executed, sealed and certified with respect to any bond or undertaking to which it is attached, shall continue to be valid and binding upon the Company. **In Testimony Whereof**, the Company has caused this instrument to be signed and its corporate seal to be affixed by their authorized officers, this **4th day of August, 2022**

Attested and Certified

Regan A. Shulman, Secretary

Arch Insurance Company — CORPORATE SEAL 1971 — Missouri

Arch Insurance Company

Stephen C. Ruschak, Executive Vice President

STATE OF PENNSYLVANIA SS
COUNTY OF PHILADELPHIA SS

I, **Michele Tripodi**, a Notary Public, do hereby certify that Regan A. Shulman and Stephen C. Ruschak personally known to me to be the same persons whose names are respectively as Secretary and Executive Vice President of the Arch Insurance Company, a Corporation organized and existing under the laws of the State of Missouri, subscribed to the foregoing instrument, appeared before me this day in person and severally acknowledged that they being thereunto duly authorized signed, sealed with the corporate seal and delivered the said instrument as the free and voluntary act of said corporation and as their own free and voluntary acts for the uses and purposes therein set forth.

Commonwealth of Pennsylvania - Notary Seal
MICHELE TRIPODI, Notary Public
Philadelphia County
My Commission Expires July 31, 2025
Commission Number 1168622

Michele Tripodi, Notary Public
My commission expires 07/31/2025

CERTIFICATION

I, **Regan A. Shulman** , Secretary of the Arch Insurance Company, do hereby certify that the attached **Power of Attorney dated August 4, 2022** on behalf of the person(s) as listed above is a true and correct copy and that the same has been in full force and effect since the date thereof and is in full force and effect on the date of this certificate; and I do further certify that the said Stephen C. Ruschak, who executed the Power of Attorney as Executive Vice President, was on the date of execution of the attached Power of Attorney the duly elected Executive Vice President of the Arch Insurance Company.
IN TESTIMONY WHEREOF, I have hereunto subscribed my name and affixed the corporate seal of the Arch Insurance Company on this 17th day of November, 20 22 .

Regan A. Shulman, Secretary

This Power of Attorney limits the acts of those named therein to the bonds and undertakings specifically named therein and they have no authority to bind the Company except in the manner and to the extent herein stated.

PLEASE SEND ALL CLAIM INQUIRIES RELATING TO THIS BOND TO THE FOLLOWING ADDRESS:
Arch Insurance – Surety Division
3 Parkway, Suite 1500
Philadelphia, PA 19102

Arch Insurance Company — CORPORATE SEAL 1971 — Missouri

To verify the authenticity of this Power of Attorney, please contact Arch Insurance Company at **SuretyAuthentic@archinsurance.com**
Please refer to the above named Attorney-in-Fact and the details of the bond to which the power is attached.

ARCH INSURANCE COMPANY
STATEMENT OF FINANCIAL CONDITION
DECEMBER 31, 2021

Assets

Cash & Cash Equivalents in Banks	$528,209,019
Bonds owned	4,116,256,071
Stocks	728,138,166
Premiums in course of collection	681,336,099
Accrued interest and other assets	1,033,576,742
Total Assets	$ 7,087,516,097

Liabilities

Reserve for losses and adjustment expenses	$3,037,270,373
Reserve for unearned premiums	1,157,010,715
Ceded reinsurance premiums payable	498,082,255
Amounts withheld or retained by company for account of others	242,924,982
Reserve for taxes, expenses and other liabilities	529,122,510
Total Liabilities	$5,464,410,835
Surplus as regards policyholders	1,623,105,261
Total Surplus and Liabilities	$7,087,516,096

By: _____ Attest: _____
Executive Vice President, Chief Financial Officer and Treasurer
Executive Vice President General Counsel and Secretary

State of New Jersey)
) SS
County of Hudson)

Thomas James Ahern, Executive Vice President, Chief Financial Officer and Treasurer and Regan Shulman, Executive Vice President, General Counsel and Secretary being duly sworn, of ARCH INSURANCE COMPANY, Missouri; and that the foregoing is a true and correct statement of financial condition of said company, as of December 31, 2021.

Subscribed and sworn to before me, this 2ND day of March, 2022

Notary Public Mary E. Keating

MARY E. KEATING
Commission # 2449628
Notary Public, State of New Jersey
My Commission Expires
August 28, 2024

SECTION 00620

PAYMENT BOND

KNOW ALL MEN BY THESE PRESENTS:

That we, Ric-Man International, Inc. (Name) 1545 NW 27th Ave Pompano Beach , FL 33069 (Address) (954) 426-1042 (Tel. No.)

As Principal and Arch Insurance Company (Name) Three Parkway, Suite 1500, Philadelphia, PA 19102 (Address) (321) 400-6024 (Tel. No.)

as Surety, are held and firmly bound to the CITY OF HOLLYWOOD, FLORIDA herein called the City, in the sum of One Million and 00/100 Dollars ($ 1,000,000.00) for the payment of said sum we bind ourselves, our heirs, executors, administrators and assigns, jointly and severally, for the faithful performance of a certain written contract dated the 17th day of November, 20 22, entered into between the Principal and the City of Hollywood, Florida for the **ON-CALL AND EMERGENCY WATER AND SEWER UTILITY REPAIR SERVICES, Bid No IFB-4730-22-OT** .

Which contract is by reference made a part hereof, and is hereinafter referred to as the Contract.

THE CONDITION of this bond is that if Principal promptly makes payments to all claimants defined in Section 255.05 (1), F.S., supplying Principal with labor, materials or supplies used directly or indirectly by principal in the prosecution of the work provided for in the Contract, then this bond shall be null and void and of no further force and effect; otherwise to remain in full force and effect.

Said surety for value received hereby stipulates and agrees that no change, extension of time, alteration or addition to the terms of the contract or any other changes in or under contract documents and compliance or noncompliance with any formalities connected with the contract does not affect Surety's obligation under this bond and Surety waives notice of any such change, extension of time, alteration or addition to the terms of the Contract or any other changes, compliance, or noncompliance to the terms of the Contract or to the Work or to the Specifications.

This bond is furnished pursuant to the statutory requirements for bond on public works projects being Florida Statute 255.05. Claimants are hereby notified that the Statute 255.05(2) specifically requires that notice be given to Contractor within 45 days after beginning to furnish labor, materials or supplies for the prosecution of the work that claimants intends to look to the bond for protection. Further notice is hereby given claimants that written notice of nonpayment within ninety (90) days after performance of the labor or after complete delivery of the materials or supplies must be delivered to the Contractor and to the Surety. Further notice is hereby given that no action for labor, materials or supplies may be instituted against the Contractor or the Surety on the bond after one year for the performance of the labor or completion of delivery of the materials or supplies.

Without modifying the foregoing, this bond shall be construed as requiring of the principal and surety no more and no less than is specified in F.S. 255.050.

SIGNED AND SEALED, this 17th day of November, 2022.

PRINCIPAL: Ric-Man International, Inc.

ATTEST: _____ _____
Andres Diaz (Signature) Michael Jankowski

Corporate Secretary (Title) President

(SEAL)

SURETY:

Arch Insurance Company
(Surety)

Witness
~~ATTEST~~:

_____ _____
(Signature)

_____ Ian Williams
(Attorney-in-Fact)

****

APPROVED AS TO FORM
AND LEGAL SUFFICIENCY
for the use and reliance of the
City of Hollywood, Florida only:

By _____
Douglas R. Gonzales
City Attorney

APPROVED AS TO FINANCE:

By _____
David E. Keller
Financial Services Director

- END OF SECTION -

ACKNOWLEDGEMENT OF PRINCIPAL

IF A CORPORATION

STATE OF Fl }
COUNTY OF Broward }

On this 22nd day of November 2022 before me personally appeared Michael Jankowski to me known, who, being by me duly sworn, did depose and say; that he/she resides at 1545 NW 27 Ave Pompano that he/she is the President of Ric-Man International, Inc, the corporation described in and which executed the within instrument; that he/she knows the seal of said corporation; that the seal affixed to said instrument is such corporate seal; that it was so affixed by the Board of Directors of said corporation; and that he/she signed his/her name thereto by like order.

Notary Public

Hamill Andrade
Notary Public
State of Florida
Comm# HH018310
Expires 9/13/2024

ACKNOWLEDGMENT OF SURETY COMPANY

STATE OF New York }

COUNTY OF New York }

On this November 17, 2022, before me personally came Ian Williams to me known, who, being by me duly sworn, did depose and say; that he/she resides in New Haven County, State of Connecticut that he/she is the Attorney-In-Fact of the Arch Insurance Company the corporation described in which executed the above instrument; that he/she knows the seal of said corporation; that the seal affixed to said instrument is such corporate seal; that is was so affixed by the Board of Directors of said corporation; and that he/she signed his/her name thereto by like order; and the affiant did further depose and say that the Superintendent of Insurance of the State of New York, has pursuant to Section 1111 of the Insurance Law of the State of New York, issued to Arch Insurance Company (Surety) his/her certificate of qualification evidencing the qualification of said Company and its sufficiency under any law of the State of New York as surety and guarantor, and the propriety of accepting and approving is as such; and that such certificate has not been revoked.

Notary Public

NY acknowledgement

KAROLYNNE RAMIREZ
Notary Public-State of New York
No. 01RA6426462
Qualified in New York County
Commission Expires December 13, 2025

This Power of Attorney limits the acts of those named herein, and they have no authority to bind the Company except in the manner and to the extent herein stated. Not valid for Note, Loan, Letter of Credit, Currency Rate, Interest Rate or Residential Value Guarantees.

POWER OF ATTORNEY

Know All Persons By These Presents:
That the Arch Insurance Company, a corporation organized and existing under the laws of the State of Missouri, having its principal administrative office in Jersey City, New Jersey (hereinafter referred to as the "Company") does hereby appoint:

Camille Maitland, Colette R. Chisholm, Dana Granice, Desiree Cardlin, Ian Williams, George O. Brewster, Gerard S. Macholz, Katherine Acosta, Michelle Wannamaker, Nelly Renchiwich, Robert T. Pearson, Susan Lupski, Thomas Bean and Vincent A. Walsh of Uniondale, NY (EACH)

its true and lawful Attorney(s)in-Fact, to make, execute, seal, and deliver from the date of issuance of this power for and on its behalf as surety, and as its act and deed: Any and all bonds, undertakings, recognizances and other surety obligations, in the penal sum not exceeding Ninety Million Dollars (90,000,000.00).
This authority does not permit the same obligation to be split into two or more bonds In order to bring each such bond within the dollar limit of authority as set forth herein.

The execution of such bonds, undertakings, recognizances and other surety obligations in pursuance of these presents shall be as binding upon the said Company as fully and amply to all intents and purposes, as if the same had been duly executed and acknowledged by its regularly elected officers at its principal administrative office in Jersey City, New Jersey.

This Power of Attorney is executed by authority of resolutions adopted by unanimous consent of the Board of Directors of the Company on December 11, 2020, true and accurate copies of which are hereinafter set forth and are hereby certified to by the undersigned Secretary as being in full force and effect:

"VOTED, That the Chairman of the Board, the President, or the Executive Vice President, or any Senior Vice President, of the Surety Business Division, or their appointees designated in writing and filed with the Secretary, or the Secretary shall have the power and authority to appoint agents and attorneys-in-fact, and to authorize them subject to the limitations set forth in their respective powers of attorney, to execute on behalf of the Company, and attach the seal of the Company thereto, bonds, undertakings, recognizances and other surety obligations obligatory in the nature thereof, and any such officers of the Company may appoint agents for acceptance of process."

This Power of Attorney is signed, sealed and certified by facsimile under and by authority of the following resolution adopted by the unanimous consent of the Board of Directors of the Company on December 11, 2020:

VOTED, That the signature of the Chairman of the Board, the President, or the Executive Vice President, or any Senior Vice President, of the Surety Business Division, or their appointees designated in writing and filed with the Secretary, and the signature of the Secretary, the seal of the Company, and certifications by the Secretary, may be affixed by facsimile on any power of attorney or bond executed pursuant to the resolution adopted by the Board of Directors on December 11, 2020, and any such power so executed, sealed and certified with respect to any bond or undertaking to which it is attached, shall continue to be valid and binding upon the Company. **In Testimony Whereof**, the Company has caused this instrument to be signed and its corporate seal to be affixed by their authorized officers, this **4th day of August, 2022**

Attested and Certified

Regan A. Shulman, Secretary

Arch Insurance Company — Corporate Seal 1971 — Missouri

Arch Insurance Company

Stephen C. Ruschak, Executive Vice President

STATE OF PENNSYLVANIA SS
COUNTY OF PHILADELPHIA SS

I, **Michele Tripodi**, a Notary Public, do hereby certify that Regan A. Shulman and Stephen C. Ruschak personally known to me to be the same persons whose names are respectively as Secretary and Executive Vice President of the Arch Insurance Company, a Corporation organized and existing under the laws of the State of Missouri, subscribed to the foregoing instrument, appeared before me this day in person and severally acknowledged that they being thereunto duly authorized signed, sealed with the corporate seal and delivered the said instrument as the free and voluntary act of said corporation and as their own free and voluntary acts for the uses and purposes therein set forth.

Commonwealth of Pennsylvania - Notary Seal
MICHELE TRIPODI, Notary Public
Philadelphia County
My Commission Expires July 31, 2025
Commission Number 1168622

Michele Tripodi, Notary Public
My commission expires 07/31/2025

CERTIFICATION

I, **Regan A. Shulman** , Secretary of the Arch Insurance Company, do hereby certify that the attached **Power of Attorney dated August 4, 2022** on behalf of the person(s) as listed above is a true and correct copy and that the same has been in full force and effect since the date thereof and is in full force and effect on the date of this certificate; and I do further certify that the said Stephen C. Ruschak, who executed the Power of Attorney as Executive Vice President, was on the date of execution of the attached Power of Attorney the duly elected Executive Vice President of the Arch Insurance Company.
IN TESTIMONY WHEREOF, I have hereunto subscribed my name and affixed the corporate seal of the Arch Insurance Company on this 17th day of November, 20 22 .

Regan A. Shulman, Secretary

This Power of Attorney limits the acts of those named therein to the bonds and undertakings specifically named therein and they have no authority to bind the Company except in the manner and to the extent herein stated.

PLEASE SEND ALL CLAIM INQUIRIES RELATING TO THIS BOND TO THE FOLLOWING ADDRESS:
Arch Insurance – Surety Division
3 Parkway, Suite 1500
Philadelphia, PA 19102

Arch Insurance Company — Corporate Seal 1971 — Missouri

To verify the authenticity of this Power of Attorney, please contact Arch Insurance Company at SuretyAuthentic@archinsurance.com
Please refer to the above named Attorney-in-Fact and the details of the bond to which the power is attached.

ARCH INSURANCE COMPANY
STATEMENT OF FINANCIAL CONDITION
DECEMBER 31, 2021

Assets

Cash & Cash Equivalents in Banks	$528,209,019
Bonds owned	4,116,256,071
Stocks	728,138,166
Premiums in course of collection	681,336,099
Accrued interest and other assets	1,033,576,742
Total Assets	$ 7,087,516,097

Liabilities

Reserve for losses and adjustment expenses	$3,037,270,373
Reserve for unearned premiums	1,157,010,715
Ceded reinsurance premiums payable	498,082,255
Amounts withheld or retained by company for account of others	242,924,982
Reserve for taxes, expenses and other liabilities	529,122,510
Total Liabilities	$5,464,410,835
Surplus as regards policyholders	1,623,105,261
Total Surplus and Liabilities	$7,087,516,096

By: _____ Attest: _____
Executive Vice President, Chief Financial Officer and Treasurer
Executive Vice President General Counsel and Secretary

State of New Jersey)
) SS
County of Hudson)

Thomas James Ahern, Executive Vice President, Chief Financial Officer and Treasurer and Regan Shulman, Executive Vice President, General Counsel and Secretary being duly sworn, of ARCH INSURANCE COMPANY, Missouri; and that the foregoing is a true and correct statement of financial condition of said company, as of December 31, 2021.

Subscribed and sworn to before me, this 2ND day of March, 2022

Notary Public Mary E. Keating

MARY E. KEATING
Commission # 2449828
Notary Public, State of New Jersey
My Commission Expires
August 28, 2024

CERTIFICATE OF LIABILITY INSURANCE

DATE (MM/DD/YYYY): 11/7/2022

THIS CERTIFICATE IS ISSUED AS A MATTER OF INFORMATION ONLY AND CONFERS NO RIGHTS UPON THE CERTIFICATE HOLDER. THIS CERTIFICATE DOES NOT AFFIRMATIVELY OR NEGATIVELY AMEND, EXTEND OR ALTER THE COVERAGE AFFORDED BY THE POLICIES BELOW. THIS CERTIFICATE OF INSURANCE DOES NOT CONSTITUTE A CONTRACT BETWEEN THE ISSUING INSURER(S), AUTHORIZED REPRESENTATIVE OR PRODUCER, AND THE CERTIFICATE HOLDER.

IMPORTANT: If the certificate holder is an ADDITIONAL INSURED, the policy(ies) must have ADDITIONAL INSURED provisions or be endorsed. If SUBROGATION IS WAIVED, subject to the terms and conditions of the policy, certain policies may require an endorsement. A statement on this certificate does not confer rights to the certificate holder in lieu of such endorsement(s).

PRODUCER McNish Group, Inc. 26622 Woodward Ave. Ste. 200 Royal Oak MI 48067	**CONTACT NAME:** Kerri Marsalese **PHONE (A/C, No, Ext):** 248-544-4800 **FAX (A/C, No):** **E-MAIL ADDRESS:** certs@mcnish.com
INSURED RICMA-2 Ric-Man International Inc. 1545 NW 27th Avenue Pompano Beach FL 33069	**INSURER(S) AFFORDING COVERAGE** — **NAIC #** **INSURER A :** Amerisure Insurance Co. — 19488 **INSURER B :** Amerisure Mutual Insurance Company — 23396 **INSURER C :** Amerisure Partners Ins. Co. — 11050 **INSURER D :** **INSURER E :** **INSURER F :**

COVERAGES **CERTIFICATE NUMBER:** 238887300 **REVISION NUMBER:**

THIS IS TO CERTIFY THAT THE POLICIES OF INSURANCE LISTED BELOW HAVE BEEN ISSUED TO THE INSURED NAMED ABOVE FOR THE POLICY PERIOD INDICATED. NOTWITHSTANDING ANY REQUIREMENT, TERM OR CONDITION OF ANY CONTRACT OR OTHER DOCUMENT WITH RESPECT TO WHICH THIS CERTIFICATE MAY BE ISSUED OR MAY PERTAIN, THE INSURANCE AFFORDED BY THE POLICIES DESCRIBED HEREIN IS SUBJECT TO ALL THE TERMS, EXCLUSIONS AND CONDITIONS OF SUCH POLICIES. LIMITS SHOWN MAY HAVE BEEN REDUCED BY PAID CLAIMS.

INSR LTR	TYPE OF INSURANCE	ADDL INSD	SUBR WVD	POLICY NUMBER	POLICY EFF (MM/DD/YYYY)	POLICY EXP (MM/DD/YYYY)	LIMITS	
A	X COMMERCIAL GENERAL LIABILITY			CPP205166913	2/1/2022	2/1/2023	EACH OCCURRENCE	$ 1,000,000
	[ ] CLAIMS-MADE [X] OCCUR						DAMAGE TO RENTED PREMISES (Ea occurrence)	$ 300,000
	X contractual						MED EXP (Any one person)	$ 10,000
	X Incl. X.C.U.						PERSONAL & ADV INJURY	$ 1,000,000
	GEN'L AGGREGATE LIMIT APPLIES PER:						GENERAL AGGREGATE	$ 2,000,000
	POLICY [X] PRO-JECT [ ] LOC						PRODUCTS - COMP/OP AGG	$ 2,000,000
	OTHER:							$
	AUTOMOBILE LIABILITY			CA20630971402	2/1/2022	2/1/2023	COMBINED SINGLE LIMIT (Ea accident)	$ 1,000,000
	X ANY AUTO						BODILY INJURY (Per person)	$
	[ ] OWNED AUTOS ONLY [ ] SCHEDULED AUTOS						BODILY INJURY (Per accident)	$
	X HIRED AUTOS ONLY [X] NON-OWNED AUTOS ONLY						PROPERTY DAMAGE (Per accident)	$
								$
B	X UMBRELLA LIAB [X] OCCUR			CU20516701303	2/1/2022	2/1/2023	EACH OCCURRENCE	$ 1,000,000
	EXCESS LIAB [ ] CLAIMS-MADE						AGGREGATE	$ 1,000,000
	[ ] DED [X] RETENTION $ 0							$
A	WORKERS COMPENSATION AND EMPLOYERS' LIABILITY Y/N			WC20516661402	2/1/2022	2/1/2023	X PER STATUTE [ ] OTH-ER	
	ANYPROPRIETOR/PARTNER/EXECUTIVE OFFICER/MEMBEREXCLUDED? [ ] N/A						E.L. EACH ACCIDENT	$ 1,000,000
	(Mandatory In NH) If yes, describe under DESCRIPTION OF OPERATIONS below						E.L. DISEASE - EA EMPLOYEE	$ 1,000,000
							E.L. DISEASE - POLICY LIMIT	$ 1,000,000
A	Installation Floater			CPP205166913	2/1/2022	2/1/2023	$1,000,000	$5,000 Ded

DESCRIPTION OF OPERATIONS / LOCATIONS / VEHICLES (ACORD 101, Additional Remarks Schedule, may be attached if more space is required)

Additional Insured as required by written contract: City of Hollywood. coverage is primary and non contributory.
Waiver of Subrogation as required by written contract. Thirty (30) days prior written notice except ten (10) days for non payment shall be given to Certificate Holder in the event of cancellation or non-renewal of the insurance.

CERTIFICATE HOLDER

City of Hollywood
Department of Public Utilities
1621 14th Avenue
Hollywood FL 33022

CANCELLATION

SHOULD ANY OF THE ABOVE DESCRIBED POLICIES BE CANCELLED BEFORE THE EXPIRATION DATE THEREOF, NOTICE WILL BE DELIVERED IN ACCORDANCE WITH THE POLICY PROVISIONS.

AUTHORIZED REPRESENTATIVE

© 1988-2015 ACORD CORPORATION. All rights reserved.

Ric-Man International, Inc.

EMERGENCY PROJECTS

MOT
F= Freeway
H= Highway
A= Arterial
C= Collector
L= Local

TOTALS: 37 Projects $478,893,987

OWNER	ENGINEER	CONTRACT	DESCRIPTION	FINAL AMOUNT	COM-PLETED YEAR	On Time	Time Ext	Contact Information: Contact Person	Phone No.	Fax No.	E-Mail
TOWN OF MEDLEY	SNUBBS CONSULTING	2020 GENERAL UTILITY REPAIRS	Emergency Point Repair of 8" gravity sewer	$170,570.80	2022			Rodney Santana	(305) 885-6400		rodney.carrero-santana@snubbs.com
TOWN OF MEDLEY	SNUBBS CONSULTING	2020 GENERAL UTILITY REPAIRS	Emergency repair of Pump Station	$92,193.06	2021			Rodney Santana	(305) 885-6400		rodney.carrero-santana@snubbs.com
TOWN OF MEDLEY	SNUBBS CONSULTING	2020 GENERAL UTILITY REPAIRS	Repair of 2 broken laterasl & perform Point repair of 8" gravity sewer	$224,696.91	2021			Rodney Santana	(305) 885-6400		rodney.carrero-santana@snubbs.com
MDWSD 4900 LeJeune Rd Coral Gables, FL	MIAMI-DADE W&S DEPT.	Emergency 36-Inch Force Main connection to 72-Inch Transmission Line	Pipe was at a stage of colapsing. We had to coordinate with FDOT the partial closure of Biscayne Blvd.	$413,568.00	2016	Y	Y	Nelson Cespedes	(786) 552-8142	305-607-0799	NCESP@miamidade.gov
MDWSD 4900 LeJeune Rd Coral Gables, FL	MIAMI-DADE W&S DEPT.	EMERGENCY INSTALLATION OF TWO (2) 54-INCH BUTTERFLY VALVES	LOCATED AT WEST 4TH AVENUE (RED ROAD) AND WEST 83RD STREET AND WEST 2ND AVENUE AND WEST 13TH STREET	727865.85	2016	Y	Y	Nelson Cespedes	(786) 552-8142	305-607-0799	NCESP@miamidade.gov
MDWSD 4900 LeJeune Rd Coral Gables, FL	MIAMI-DADE W&S DEPT.	EMERGENCY INSTALLATION OF 16: SEWER ON BISCAYNE BLVD & NW 36TH ST	BISCAYNE BLVD & NW 36TH ST	$438,000.00	2015	Y	Y	Nelson Cespedes	(786) 552-8142	305-607-0799	NCESP@miamidade.gov
DOT / MDWSD	APCTE / STANTEC	Section 5 Project 48-Inch PCCP - NW 2nd Ave from NW 8th St thru NW 12 St For Condotte/Community/Demoya Joint Venture	48-Inch PCCP Installation	$521,573.48	2015	Y	Y	Larry Goodwin/ Pedro Vigil	786-295-3754 / 305-205-5152		GOODWIN@miamidade.gov / vigilp@miamidade.gov
City of Sunny Isles	Various	Piggy Back Emergency Corrections	Emergency Corrections / Improvements Sanitary, Drainage, etc	$1,292,562.95	2015	Y	Y	Bill Evans	786-350-8190	0	bevans@sibfl.net
CITY OF MIAMI BEACH CITY HALL 1700 CONVENTION CTR DRIVE MIAMI BEACH, FL 33139	Various	JOB ORDER CONCTRACTING (JOC) ITB NO. 23-08/09 HORIZONTAL	*ANNUAL CONTRACT*	$2,000,000.00	2013	N/A	N/A	Theo Carrasco	305-673-7000	0	0
CITY OF LAUDERHILL 2000 CITY HALL DRIVE LAUDERHILL, FL 33313	Ric-Man Intl, Inc	Emergency Repair of 20" WM on Oakland Pk & Inverary Blvd w/ Linestops	Insert 2-20" Linestops and Repair 20" WM	$59,520.00	2011	Y	N	Bob Snyder	954-445-4396	0	0
CITY OF PLANTATION 400 NW 73rd AVENUE PLANTATION, FL 33317	Various	Emergency Repairs	6 Separate Emergencies on going use	$328,800.00	2010	Y	N	Jeff Jones	954-797-2159	0	0
NORTH BAY VILLAGE 1666 Kennedy Causeway #700 North Bay Village, FL 33141	N/A	Emergency Repairs to existing FM at Master Pump Station	Remove and Replace FM inside & outside of Pump Station	$59,105.02	2010	Y		Bob Pushkin	305-866-9625	#N/A	0
CITY OF LAUDERHILL 2000 CITY HALL DRIVE LAUDERHILL, FL 33313	N/A	Emergency Replacement of 6" WM & 42" Storm Sewer damage by ATT	Replace 6" WM, & 80' of 42" CMP w/ HDPE	$45,722.33	2010	Y		Jeff Jones	954-797-2159	#N/A	0
MIAMI-DADE W&S DEPT 4900 LeJeune Rd Coral Gables, FL	APCTE Engineering & Ric-Man Int'l	20" Emergency Repair to existing Force Main at Miami Int. Airport	20" HDPE Horizontal Directional Drill under Airport ramps	$400,000.00	2010	Y		Rod Lovett	305-254-5871	#N/A	0
City of Oakland Park 3650 NE 12th Ave Oakland Park, FL 33334	Craven Thompson & Associates 3563 NW 53rd. St. Ft. Lauderdale, FL 33309	Emergency replacement of 10" Deep Sanitary Sewer on NE 5th Av and 40th St	Remove & Replace 350' of 10" San Sewer with C-900 PVC Pipe	$251,628.00	2009	Y	N	Susan Smith	954-630-4432	0	0
CITY OF MIAMI BEACH CITY HALL 1700 CONVENTION CTR DRIVE MIAMI BEACH, FL 33139	CITY OF MIAMI BEACH CITY HALL 1700 CONVENTION CTR DRIVE MIAMI BEACH, FL 33139	EMERGENCY 12" WATER MAIN ON COLLINS AVE Design Build	1000" OF 12" DIP WATER MAIN, 808 Residents Design Build	$423,000.00	2009	Y	N	JOSE PEREZ	305-673-7000	0	johnmp@oaklandparkfl.gov
CITY OF LAUDERHILL 2000 CITY HALL DRIVE LAUDERHILL, FL 33313	n/a	Emergency Repairs	Emergency 24" Linestop and Valve Replacement	$9,413.00	2008	Y		Indar Maharaj	954-730-4225	#N/A	0
MIAMI-DADE W&S DEPT 4900 LeJeune Rd Coral Gables, FL	MIAMI-DADE W&S DEPT.	Oleta River 54" Emergency Repair	Repair PCCP Joint on 54" FM	$390,722.00	2008	Y		Rod Lovett	305-254-5871		RODLO@miamidade.gov
CITY OF PLANTATION 400 NW 73rd AVENUE PLANTATION, FL 33317		Dir. Drill 6" HDPE under golf course	6" DIP and 1,000FT 6" Directional Drill	$113,804.00	2008			Susan Smith	954-630-4432	#N/A	0
CITY OF LAUDERHILL 2000 CITY HALL DRIVE LAUDERHILL, FL 33313	n/a	Emergency Repairs	Emergency 24" Linestop Installation	$10,983.35	2008	Y		Indar Maharaj	954-730-4225	#N/A	0
MIAMI-DADE W&S DEPT 4900 LeJeune Rd Coral Gables, FL	MIAMI-DADE W&S DEPT.	NE 163 ST Emergency Repair of 42" Sewer	150' of 42"	$848,027.00	2007	Y		Joe Armao	786-586-4198	#N/A	jarmao@miamidade.gov
CITY OF MIAMI BEACH CITY HALL 1700 CONVENTION CTR DRIVE MIAMI BEACH, FL 33139	APCTE Engineering & Ric-Man Int'l	DESIGN/BUILD Indian Creek 12" WM Replacement for DOT Emergency	12" WM Design Build	$618,034.00	2007	Y	N	Fernando Vasquez	305-673-7080	0	0

OWNER	ENGINEER	CONTRACT	DESCRIPTION	FINAL AMOUNT	COM-PLETED YEAR	On Time	Time Ext	Contact Person	Phone No.	Fax No.	E-Mail
CITY OF MIAMI BEACH CITY HALL 1700 CONVENTION CTR DRIVE MIAMI BEACH, FL 33139	N/A	Julia Tuttle Emergency 36" WM Repair	36"	$51,635.00	2006	Y		Mike Alvarez	305-673-000	305-673-7073	0
CITY OF LAUDERHILL 2000 CITY HALL DRIVE LAUDERHILL, FL 33313	N/A	Emergency Sanitary Repair	8" Pipe and Manhole	$9,416.00	2006	Y	N	Indar Maharaj	954-730-4225	0	0
HOLLYWOOD HOSPITAL	N/A	HOLLYWOOD HOSPITAL SANITARY LATERAL	6"	$65,000.00	2006	Y			#N/A	#N/A	#N/A
CITY OF FT. LAUDERDALE 100 N. ANDREWS AVE FT. LAUDERDALE, FL	N/A	EMERGENCY CLEAN-UP DUE TO HURRICANE WILMA	N/A	$810,275.00	2005	Y	N	Greg Sagle	954-831-0903	0	0
CITY OF FT. LAUDERDALE 100 N. ANDREWS AVE FT. LAUDERDALE, FL	N/A	EMERGENCY CLEAN-UP DUE TO HURRICANE KATRINA	N/A	$567,948.00	2005	Y	N	Greg Sagle	954-831-0903	0	0
CITY OF LAUDERHILL 2000 CITY HALL DRIVE LAUDERHILL, FL 33313	N/A	Emergency Repair of FM Aerial Crossing	30" Pipe Repair on Aerial Crossing	$104,536.00	2005	Y	N		#N/A	0	#N/A
BROWARD COUNTY OES 2555 W. Copans Rd Pompano Beach, FL	N/A	EMERGENCY REPAIRS OF WATERMAIN DUE TO HURRICANE WILMA	3 LOCATIONS 6" TO 10"	$23,585.00	2005	Y	N	Alan Garcia P.E.	954-831-0903	0	0
CITY OF PLANTATION 400 NW 73rd AVENUE PLANTATION, FL 33317	N/A	EMERGENCY REPAIRS OF WATERMAIN DUE TO HURRICANE WILMA	1 LOCATION 8"	$13,236.00	2005	Y	N	Hank Bertram	954-797-2285	0	0
CITY OF CORAL GABLES	OWNER	ANNUAL CONTRACT	Sewer & Pump Station		2003	Y					#N/A
MIAMI-DADE W&S DEPT 4900 LeJeune Rd Coral Gables, FL	MIAMI-DADE W&S DEPT.	EMERGENCY REPAIR OF 54" FLAGLER INTERCEPTOR	1,400 LF 54" PCCP	$951,180.00	2005	Y	Y	Nelson Cespedes	(786) 552-8142	954-771-0298	NCESP@miamidade.gov
MIAMI-DADE W&S DEPT. DOUGLAS BLDG 3071 SW 38TH AVE. MIAMI, FL.	MIAMI-DADE W&S DEPT. Design Build in-house	DESIGN/BUILD EMERGENCY REPAIR BISCAYNE BAY	10' of 72" PCCP Design Build	$498,750.00	2001	Y		Humberto Codispoti	395-799-3611	#N/A	0
SOUTH CENTRAL REGIONAL WASTEWATER TREATMENT DISPOSAL BOARD	MIAMI-DADE W&S DEPT.	EMERGENCY REPAIR WEST 8THV AVE IN HIALEAH	48" PCCP	$325,001.00	2000	Y		Nelson Cespedes	(786) 552-8142	#N/A	NCESP@miamidade.gov
MIAMI-DADE W&S DEPT 4900 LeJeune Rd Coral Gables, FL	MIAMI-DADE W&S DEPT.	EMERGENCY REPAIR S.W 122 AVE & 76 ST	48" PCCP	$115,280.00	2000	Y			#N/A	#N/A	#N/A
CITY OF MIAMI BEACH CITY HALL 1700 CONVENTION CTR DRIVE MIAMI BEACH, FL 33139	CITY OF MIAMI BEACH CITY HALL 1700 CONVENTION CTR DRIVE MIAMI BEACH, FL 33139	REPAIR 36" WATERMAIN AT JULIA TUTTLE CAUSEWAY 1-36" Directional Drill	600' 36" Directional Drill	$836,424.00	1999	Y		John De Pazos	305-673-7000 X 6447	#N/A	0
MIAMI-DADE W&S DEPT 4900 LeJeune Rd Coral Gables, FL	MIAMI-DADE W & S AUTHORITY	48" EMERGENCY REPAIR FM OKEECHOBEE RD. & NW 16TH AV	48" FM	$173,000.00	1997	Y		Nelson Cespedes	(786) 552-8142	#N/A	NCESP@miamidade.gov
MIAMI-DADE W&S DEPT 4900 LeJeune Rd Coral Gables, FL	MIAMI-DADE W & S AUTHORITY	54" EMERGENCY REPAIR WATERMAIN RED ROAD & NW 60TH ST.	733" of 54" PCCP FM	$146,500.00	1997	Y		Nelson Cespedes	(786) 552-8142	#N/A	NCESP@miamidade.gov
MIAMI-DADE W&S DEPT 4900 LeJeune Rd Coral Gables, FL	MIAMI-DADE W & S AUTHORITY	EMERGENCY REPLACEMENT OF MH NW 7TH AV & NW 135 TO 128 ST.	8" SAN	$141,753.00	1996	Y	?	Nelson Cespedes	(786) 552-8142	#N/A	NCESP@miamidade.gov
MIAMI-DADE W&S DEPT 4900 LeJeune Rd Coral Gables, FL	MIAMI-DADE W & S AUTHORITY	Sewer Rehab Fiberglass Sliplinning of existing 48" FM - Dixie Highway & Near SW 17th St	48" FIBERGLASS SLIP-LINE	$329,607.00	1995			Murray Grant (D)	305-673-000	#N/A	
MIAMI-DADE W&S DEPT 4900 LeJeune Rd Coral Gables, FL	MIAMI-DADE W & S AUTHORITY	84" EMERGENCY FORCE MAIN SW 7TH ST.	837 LF 84" PCCP	$83,696.00	1993	Y	N	Nelson Cespedes	(786) 552-8142	0	NCESP@miamidade.gov
FLORIDA DOT 1000 NW 111th AVENUE MIAMI, FL	N/A	EMERGENCY CLEAN-UP HURRICANE ANDREW	EMERGENCY	$400,000.00	1992	Y					#N/A

Ric-Man International, Inc.

ALL COMPLETED PROJECTS

			TOTALS:	**234 Projects**	**$478,893,987**
OWNER	**ENGINEER**	**CONTRACT**	**DESCRIPTION**	**FINAL AMOUNT**	COM-PLETED YEAR
Broward County	Chen Moore and Associates	Utility Analysis Zone 113B	Neighborhood Improv. Proj. with, WM, San. Sewer, FM, Pump Sta. demo & install, landscape & roadway restoration.	$28,115,925.82	2021
Miami Dade Water and Sewer Department	Ty LIN	South Miami Heights Phase B	Design Build Services for Replacement of Water Mains and service conversions in the south miami heights area Phase B	$15,732,076.54	2020
Miami Dade Water and Sewer Department	Ty LIN	South Miami Heights Phase A	Design Build WM and service conversions	$15,683,712.17	2018
City of Sunrise	Arcadis	Springtree Water/Waste Water Treatment Plant off-site Drainage & Utilities Improvement	Improvments of Water Mains and Drainage Utilities	$2,100,000.00	2018
City of Coral Gables	Coastal System International, Inc.	Miracle Mile & Giralda Avenue Streetscape	Drainage, roadway, & streetscape improvements, decorative pavers, fountain restorations, extensive landscaping, decorative street lighting, decorative street furniture and way finding signage.	$24,462,288.00	2018
SUNNY ISLES	Stantec	Pedestrian Bridge	Pedestrian Bridge	$1,869,887.24	2017
CITY OF CAPE CORAL	Tetra Tech	SW 6 & 7 Utilities Expansion Project CONTRACT II - NORTH CENTRAL AREA 3 ITB UT13-02/TM-B	2 San P.S. - 5,560 ft of 15"-30" Pipe - Eliptical pipe - 39,810' of 6"-8" WM - 43,790' of 4"-16" Irrig - 41,110' of 8"-24" San - 5,620' of 4"-12" FM - Roadway, Electrical , Grassing	$11,096,384.00	2017
City of Sunrise	ARCADIS	Golf Village Water Main Improvements	NIP - Water	$5,526,762.00	2017
City of Oakland Park	Thompson and Associates	Garden Acres Industrial Area Sanitary Sewer System	Design Build SAN Sewer with Grinder PS & WM	$699,960.95	2017
MDWSD 4900 LeJeune Rd Coral Gables, FL	MIAMI-DADE W&S DEPT.	54-Inch Water Main Transmission Line - Red Road	Worked on FDOT ROW, had to close Grattiny Expressway to complete the work.	$1,914,400.65	2017

OWNER	ENGINEER	CONTRACT	DESCRIPTION	FINAL AMOUNT	COM-PLETED YEAR
CITY OF MIAMI BEACH CITY HALL 1700 CONVENTION CTR DRIVE MIAMI BEACH, FL 33139	Chen-Moore and Associates	Sunset 3&4	Neighborhood Improvement Project including sanitary lining, drainage, water, and roadway improvements	$ 10,910,593.00	2016
CITY OF MIAMI BEACH CITY HALL 1700 CONVENTION CTR DRIVE MIAMI BEACH, FL 33139		Lower North Bay Road	5890' of 8"&10" WM and 15" to 42" Drainage and 10 Wells	$1,762,799.37	2016
MDWSD 4900 LeJeune Rd Coral Gables, FL	MIAMI-DADE W&S DEPT.	Emergency 36-Inch Force Main connection to 72-Inch Transmission Line	Pipe was at a stage of colapsing. We had to coordinate with FDOT the partial closure of Biscayne Blvd.	$413,568.00	2016
MDWSD 4900 LeJeune Rd Coral Gables, FL	MIAMI-DADE W&S DEPT.	EMERGENCY INSTALLATION OF TWO (2) 54-INCH BUTTERFLY VALVES	LOCATED AT WEST 4TH AVENUE (RED ROAD) AND WEST 83RD STREET AND WEST 2ND AVENUE AND WEST 13TH STREET	727865.85	2016
Broward County WWSS	Broward County WWSS	Twin Lakes	Neighborhood Improvement. San Sewer, Lift Station and Drainage	$4,032,144.45	2015
MDWSD 4900 LeJeune Rd Coral Gables, FL	MIAMI-DADE W&S DEPT.	EMERGENCY INSTALLATION OF 16: SEWER ON BISCAYNE BLVD & NW 36TH ST	BISCAYNE BLVD & NW 36TH ST	$438,000.00	2015
City of West Palm Beach	MATHEWS CONSULTING	MONCEAUX ROAD GROUP 1 DRAINAGE & UTILITY IMPROVEMENT PROJECT	Drainage: 3,700', Sanitary:3,180', W Mains: 4,040, Landscaping, Lighting, Markings and Roadways	$3,265,695.95	2015
DOT / MDWSD	APCTE / STANTEC	Section 5 Project 48-Inch PCCP - NW 2nd Ave from NW 8th St thru NW 12 St For Condotte/Community/Demoya Joint Venture	48-Inch PCCP Installation	$521,573.48	2015
City of Oakland Park	CTA	Oakland Park 38th Street	Drainage and Streetscape improvement	$3,398,578.35	2015
City of Sunny Isles	Various	Piggy Back Emergency Corrections	Emergency Corrections / Improvements Sanitary, Drainage, etc	$1,292,562.95	2015
City of Weston	Calvin, Giordano & Assoc	Weston Drainage Improvements	60" - 15" Drainage 9,021	$2,468,879.91	2014
City of Weston	Calvin, Giordano & Assoc	ITDD Weston Force Main Improvements	16" Forcemain 8,500	$1,611,657.59	2014
PBC Utilities Department	Keshavarz & Assoc. Inc	Belvedere Homes Infrastructure Improvements Phase 2	Infrastructure improvements including 10k' 8" PVC WM, 8k' PVC Vac SAN, 3k' 15"-42" RCP SW	$3,164,725.80	2014

OWNER	ENGINEER	CONTRACT	DESCRIPTION	FINAL AMOUNT	COM-PLETED YEAR
TOWN OF SURFSIDE	Calvin, Giordano & Assoc	11-Surf INFRASTRUCTURE REHAB	W Mains, San Sewer, Storm Sewer, 2 San PS, 3 Storm PS, 9 Wells	$18,292,287.92	2014
CITY OF MIAMI 444 SW 2nd AVENUE MIAMI, FLORIDA	Gannett Fleming	Englewood	Traffic Circles w/ Drainage	$586,716.95	2013
BROWARD COUNTY WATER & WASTE ENGINEERING DIVISION 2555 W COPANS ROAD POMPANO BEACH, FL 33069	BROWARD COUNTY WATER & WASTE ENGINEERING DIVISION 2555 W COPANS ROAD POMPANO BEACH, FL 33069	1B2 Water Main Improvement	9,029' of 6"-16" WM	$1,012,867.10	2014
CITY OF MIAMI BEACH CITY HALL 1700 CONVENTION CTR DRIVE MIAMI BEACH, FL 33139	CITY OF MIAMI BEACH CITY HALL 1700 CONVENTION CTR DRIVE MIAMI BEACH, FL 33139	W Serv Proj Irrigation and Fireline MBch # 539.00PW		$67,081.05	2013
CITY OF MIAMI BEACH CITY HALL 1700 CONVENTION CTR DRIVE MIAMI BEACH, FL 33139	CITY OF MIAMI BEACH CITY HALL 1700 CONVENTION CTR DRIVE MIAMI BEACH, FL 33139	JOC-2		$512,000.00	2013
City of Oakland Park 3650 NE 12th Ave Oakland Park, FL 33334	Craven Thompson & Associates 3563 NW 53rd. St. Ft. Lauderdale, FL 33309	12-Oakw BID PACK 3 WATER MAIN IMPROVEMENTS	1496 lf of 15" RCP 6" & 8" DIP & FPVC Water Mains	$2,075,256.90	2014
CITY OF MIAMI BEACH CITY HALL 1700 CONVENTION CTR DRIVE MIAMI BEACH, FL 33139	Various	JOB ORDER CONCTRACTING (JOC) ITB NO. 23-08/09 HORIZONTAL	*ANNUAL CONTRACT*	$2,000,000.00	2013
CITY OF MIAMI BEACH CITY HALL 1700 CONVENTION CTR DRIVE MIAMI BEACH, FL 33139	CITY OF MIAMI BEACH CITY HALL 1700 CONVENTION CTR DRIVE MIAMI BEACH, FL 33139	North Shore Hyd Relocations and Valve Bx Adjustents	Utility adjustment and FH Reloc Collins 75th to 87th	$96,881.86	2012
VILLAGE OF PALMETTO BAY 9705 E Hibiscus St Palmetto Bay, FL 33157	Kimley - Horn & Assoc	11-PBay SW 89th AVE	Paving and Drainage Improvements	$646,783.00	2012
CITY OF MIAMI BEACH CITY HALL 1700 CONVENTION CTR DRIVE MIAMI BEACH, FL 33139	schwebke-shiskin & assoc. miami fl	JOC-2 VENETIAN CAUSEWAY	2,802 ft of Watermains and Taps	$863,000.00	2012
CITY OF MIAMI BEACH CITY HALL 1700 CONVENTION CTR DRIVE MIAMI BEACH, FL 33139	CH2MHill	JOC-2 Prairie	515' of Drainage, Roadway and Hardscape	$512,000.00	2012
CITY OF MIAMI BEACH CITY HALL 1700 CONVENTION CTR DRIVE MIAMI BEACH, FL 33139	APCTE Engineering & Ric-Man Int'l	JOC-2 Flamingo-Lummus St Improvements (10 E)	7,467' of 8"&10" WM and 15" to 42" Drainage and 10 Wells	$4,112,266.40	2012
CITY OF LAUDERHILL 2000 CITY HALL DRIVE LAUDERHILL, FL 33313	CITY OF MIAMI BEACH CITY HALL 1700 CONVENTION CTR DRIVE MIAMI BEACH, FL 33139	Valve Replacement Program	Linestops and Valves	$137,400.00	2012

OWNER	ENGINEER	CONTRACT	DESCRIPTION	FINAL AMOUNT	COM-PLETED YEAR
FLORIDA KEYS AQUEDUCT AUTHORITY 1100 Kennedy Drive Key West, Fl 33040	In House / FKAA Engineer	11-TavWM TAVERNIER - BAYRIDGE	10,300 lf C-900 PVC	$1,030,196.63	2012
CITY OF LAUDERHILL 2000 CITY HALL DRIVE LAUDERHILL, FL 33313	Ric-Man Intl, Inc	Emergency Repair of 20" WM on Oakland Pk & Inverary Blvd w/ Linestops	Insert 2-20" Linestops and Repair 20" WM	$59,520.00	2011
BROWARD COUNTY WATER & WASTE ENGINEERING DIVISION 2555 W COPANS ROAD POMPANO BEACH, FL 33069	CHEN AND ASSOCIATES	Broadview Park NIP BP 2 Sanitary, Drainage, Watermains and Pump Stations	San (8 to 16" DIP & PVC) Park and Pump Station Parking Lot with multilevel Handicap Ramp, Curbs, Fence and Lighting	$16,924,995.69	2011
STERLING PROPERTIES	VARIOUS	WAREHOUSE CONSTRUCTION	1 Million sq ft of Warehouses including 50 parking lots with 12" to 30" Drainage, Baffles, Water and Sewer, Lake outfalls, Curb and Gutters, Landscaping, Lighting, and Sidewalks		1990 thru 2010
BROWARD COUNTY WATER & WASTE ENGINEERING DIVISION 2555 W COPANS ROAD POMPANO BEACH, FL 33069	CHEN AND ASSOCIATES	Broadview Park NIP BP 4	20" Water Main Inst. On SR 441 In Plantation	$1,691,565.50	2010
CITY OF PLANTATION 400 NW 73rd AVENUE PLANTATION, FL 33317	Various	Emergency Repairs	6 Separate Emergencies on going use	~~$828,800.00~~	~~2010~~
CITY OF PLANTATION 400 NW 73rd AVENUE PLANTATION, FL 33317	CHEN AND ASSOCIATES	New WM Installation	1940 LF of 8" Watermain	$120,707.77	2010
CITY OF PLANTATION 400 NW 73rd AVENUE PLANTATION, FL 33317	CHEN AND ASSOCIATES	Replacement of Sidewalks, Swales and Driveways	900 SY of Sidewalk Replacement	$49,731.47	2010
CITY OF MIAMI BEACH CITY HALL 1700 CONVENTION CTR DRIVE MIAMI BEACH, FL 33139	APCTE Engineering & Ric-Man Int'l	NAUT-06 Neighborhood No. 7 Nautilus Right-Of-Way Infrastructure Improvement Project	8" WM 18"-42" HDPE/RCP 6 Pump Station Design Build, 46 space Parking Lot, curbs, fence, landscaping	$34,792,066.00	2010
CITY OF MIAMI BEACH CITY HALL 1700 CONVENTION CTR DRIVE MIAMI BEACH, FL 33139	Ric-Man Intl, Inc	JOC-2 OCEANFRONT W 26th St to 42nd St Install new 8" & 10" WM on Collins Ave	4,365 ft of 8" & 10" WM and Services and Streetscape	$2,017,570.00	2010
MIAMI-DADE W&S DEPT 4900 LeJeune Rd Coral Gables, FL	Ric-Man Intl, Inc	F&I 20" HDPE and 16" DI WM along Rickenbacker Itracoastal Waterway Bridge	*3,800 ft of Directional Drill & 70' of 16" DIP*	$1,734,015.00	2010
NORTH BAY VILLAGE 1666 Kennedy Causeway #700 North Bay Village, FL 33141	Kimley - Horn & Assoc	Kennedy (NE 79 St) Causeway Utility Relocation Project	Remove & Replace 500' Ex 12" WM & Exist 8" FM on Bridge	$256,560.00	2010
CITY OF PLANTATION 400 NW 73rd AVENUE PLANTATION, FL 33317	CHEN AND ASSOCIATES	Remove and Repalce Existing 8" WM & Services on Peters Raod b/ SR 441 and SW 45th Av.	Replace 2000' Ex 8" WM & Exist Services	$132,773.00	2010
BROWARD COUNTY WATER & WASTE ENGINEERING DIVISION 2555 W COPANS ROAD POMPANO BEACH, FL 33069	BROWARD COUNTY WATER & WASTE ENGINEERING DIVISION 2555 W COPANS ROAD POMPANO BEACH, FL 33069	Wiles Road Reclaimed Watermain 1-24" Dir Drill for Russell Eng. Inc.	Installation of 6,500 LF of 16" PVC Re-use WM	$1,499,980.00	2009

OWNER	ENGINEER	CONTRACT	DESCRIPTION	FINAL AMOUNT	COM-PLETED YEAR
NORTH BAY VILLAGE 1666 Kennedy Causeway #700 North Bay Village, FL 33141	N/A	Emergency Repairs to existing FM at Master Pump Station	Remove and Replace FM inside & outside of Pump Station	$59,105.02	2010
City of Aventura	Craven Thompson & Associates 3563 NW 53rd. St. Ft. Lauderdale, FL 33309	City of Aventura ANNUAL CONTRACT	*Drainage Cleaning & TV*	$29,949.30	2010
CITY OF MIAMI BEACH CITY HALL 1700 CONVENTION CTR DRIVE MIAMI BEACH, FL 33139		JOC- Lincoln Lane	WM, Drainage and Concrete Flat Work	$80,624.22	2010
CITY OF MIAMI BEACH CITY HALL 1700 CONVENTION CTR DRIVE MIAMI BEACH, FL 33139		JOC-Dade & Meridian	WM, Drainage and Concrete Flat Work	$30,678.66	2010
CITY OF LAUDERHILL 2000 CITY HALL DRIVE LAUDERHILL, FL 33313	N/A	Emergency Replacement of 6" WM & 42" Storm Sewer damage by ATT	Replace 6" WM, & 80' of 42" CMP w/ HDPE	$45,722.33	2010
MIAMI-DADE W&S DEPT 4900 LeJeune Rd Coral Gables, FL	APCTE Engineering & Ric-Man Int'l	20" Emergency Repair to existing Force Main at Miami Int. Airport	20" HDPE Horizontal Directional Drill under Airport ramps	$400,000.00	2010
CITY OF MIAMI BEACH CITY HALL 1700 CONVENTION CTR DRIVE MIAMI BEACH, FL 33139	RIC-MAN INT'L, INC. Design Build in-house	JOC-Stillwater Drive WM Upsize Design Build in-house	JOC 07-12	$339,893.00	2010
CITY OF MIAMI BEACH CITY HALL 1700 CONVENTION CTR DRIVE MIAMI BEACH, FL 33139	Various	JOB ORDER CONCTRACTING (JOC-1) ITB NO. 36-06/07 HORIZONTAL	*ANNUAL CONTRACT*	????	2010
City of Oakland Park 3650 NE 12th Ave Oakland Park, FL 33334	Craven Thompson & Associates 3563 NW 53rd. St. Ft. Lauderdale, FL 33309	Emergency replacement of 10" Deep Sanitary Sewer on NE 5th Av and 40th St	Remove & Replace 350' of 10" San Sewer with C-900 PVC Pipe	$251,628.00	2009
KEY LARGO WASTEWATER TREATMENT DISTRICT	Eckler Engineering, Inc	Vacuum Collection System Basin B Phase II	Sanitary, Roadway and Paving, Vacuum Collection Collection	$1,150,890.00	2009
KEY LARGO WASTEWATER TREATMENT DISTRICT	Eckler Engineering, Inc	Vacuum Collection System Basin B Phase 1	6,200-4", 3,800'-6" 300'-8" 76 collection pits 214-properties	$1,017,430.00	2009
CITY OF MIAMI BEACH CITY HALL 1700 CONVENTION CTR DRIVE MIAMI BEACH, FL 33139	APCTE Engineering & Ric-Man Int'l	JOC #02-Prairie Nbrhd #8 Bayshore Design Build	Storm PS, 4,000' Drainage, Roadway, Streetscape	$1,997,900.00	2009
University of Florida PO Box 110850 Gainesville, FL 32611	Baljet Environmental	Sanitary Sewer & Water System Improvements	Pump Station Treatment Plant 8" Sanitary Piping and 8" WM	$672,634.00	2009
PALM BEACH COUNTY WATER UTILITIES DEPARTMENT 8100 FOREST HILL BLVD. WEST PALM BEACH, FL 33413	MATHEWS CONSULTING INC. 1475 CENTREPARK BLVD. STE 250 WEST PALM BEACH, FL 33401	Wastewater Lift Station Rehabilitation Project No. WUD 06-164 C 4-Pump Stations	Rehabilitation/ conversion of 4 existing WW dry can type lift stations to submersible type	$930,975.00	2009
CITY OF MIAMI BEACH CITY HALL 1700 CONVENTION CTR DRIVE MIAMI BEACH, FL 33139	CITY OF MIAMI BEACH CITY HALL 1700 CONVENTION CTR DRIVE MIAMI BEACH, FL 33139	EMERGENCY 12" WATER MAIN ON COLLINS AVE Design Build	1000" OF 12" DIP WATER MAIN, 808 Residents Design Build	$423,000.00	2009

OWNER	ENGINEER	CONTRACT	DESCRIPTION	FINAL AMOUNT	COM-PLETED YEAR
CITY OF MIAMI BEACH CITY HALL 1700 CONVENTION CTR DRIVE MIAMI BEACH, FL 33139	CITY OF MIAMI BEACH CITY HALL 1700 CONVENTION CTR DRIVE MIAMI BEACH, FL 33139	INDIAN CREEK WATER MAIN Design Build	265 FT OF 16" WATER MAIN, 100 Residents Design Build	$137,000.00	2009
THE CARLILE HOTEL 1250 OCEAN DR. MIAMI BEACH, FL 33139	Ric-Man Intl, Inc	THE CARLILE HOTEL Design Build	LANDSCAPE & LIGHTING Design Build	$34,087.20	2009
City of Oakland Park 3650 NE 12th Ave Oakland Park, FL 33334	Craven Thompson & Associates 3563 NW 53rd. St. Ft. Lauderdale, FL 33309	Sanitary Sewer LS A-2 Station Upgrade	6" DIP FM & Pump Station	$390,434.00	2008
St. Lucie County	LBFH, INC. Ft,. Pierce	South 26th street Area Improvements	15", 18" & 24" Pipe Culvert Residents 111, Businesses 6	$2,234,040.00	2008
TOWN OF JUPITER UTILITIES 210 MILITARY TRAIL JUPITER, FL 33458	TOWN OF JUPITER UTILITIES 210 MILITARY TRAIL JUPITER, FL 33458	MISCELLANEOUS STORMWATER IMPROVEMENTS 2005	18" FR DR	$1,129,579.00	2008
CITY OF MIAMI BEACH CITY HALL 1700 CONVENTION CTR DRIVE MIAMI BEACH, FL 33139	APCTE Engineering & Ric-Man Int'l	Lumus Neighborhood 6th Street to Espanola Way Design Build	3,000' of 8" DIP WM 4" PVC FM 18"-36" RCP 610 Residents Design Build	$13,107,139.00	2008
CITY OF MIAMI BEACH CITY HALL 1700 CONVENTION CTR DRIVE MIAMI BEACH, FL 33139	CH2MHIII	JOC #01-S Shore Dr MBSS		$470,000.00	2008
TOWN OF JUPITER UTILITIES 210 MILITARY TRAIL JUPITER, FL 33458	HAZEN & SAWYER	Water Treatment Plant Concentrate Line & Flowmeter	12" DIP WM Interconnect	$199,354.00	2008
Related Group	EDC Corporation	Block 1	12" DIP	$718,701.00	2008
Vero Beach Business Park, LLC	MBV Engineering	S.R. 60 INDUSTRIAL PARK	8" DIP/PVC, WM. 4" PVC FM 15" -30" HDPE & Eliptical 1-Pump Station	$2,075,742.00	2008
CITY OF LAUDERHILL 2000 CITY HALL DRIVE LAUDERHILL, FL 33313	n/a	Emergency Repairs	Emergency 24" Linestop and Valve Replacement	$9,413.00	2008
City of Oakland Park 3650 NE 12th Ave Oakland Park, FL 33334	CRAIG A. SMITH & ASSOCIATES OF FLORIDA, INC. & RIC-MAN Int'l	Watermain Design Build	10" WM Design Build	$223,467.00	2008
MIAMI-DADE W&S DEPT 4900 LeJeune Rd Coral Gables, FL	MIAMI-DADE W&S DEPT.	Oleta River 54" Emergency Repair	Repair PCCP Joint on 54" FM	$390,722.00	2008
TOWN OF JUPITER UTILITIES 210 MILITARY TRAIL JUPITER, FL 33458	HAZEN & SAWYER	Recharge System 24" HDPE Main & 2-24" Dir Drills 2-Pump Stations (Storm)	24" PVC, 16" & 18" HDPE 2 Dir. Drill, 2 Pump Stations	$2,108,691.00	2008
CITY OF PLANTATION 400 NW 73rd AVENUE PLANTATION, FL 33317		Dir. Drill 6" HDPE under golf course	6" DIP and 1,000FT 6" Directional Drill	$113,804.00	2008
CITY OF LAUDERHILL 2000 CITY HALL DRIVE LAUDERHILL, FL 33313	n/a	Emergency Repairs	Emergency 24" Linestop Installation	$10,983.35	2008

OWNER	ENGINEER	CONTRACT	DESCRIPTION	FINAL AMOUNT	COM-PLETED YEAR
CITY OF MIAMI BEACH CITY HALL 1700 CONVENTION CTR DRIVE MIAMI BEACH, FL 33139	APCTE Engineering & Ric-Man Int'l	WASHINGTON AVENUE IMPROVEMENTS PROGRAM Design Build	8" SAN, 12"WM, 4" TO 42" DRNG Residents 500 Design Build	$18,228,903.00	2008
BROWARD COUNTY WATER & WASTE ENGINEERING DIVISION 2555 W COPANS ROAD POMPANO BEACH, FL 33069	CHEN AND ASSOCIATES	BROADVIEW PARK NEIGHBORHOOD IMPROVEMENTS	105,000' of 8" TO 16" WM Residents 2000 Businesses 60	$10,446,348.00	2007
PALM BEACH COUNTY WATER UTILITIES DEPARTMENT 8100 FOREST HILL BLVD. WEST PALM BEACH, FL 33413	MATHEWS CONSULTING INC. 1475 CENTREPARK BLVD. STE 250 WEST PALM BEACH, FL 33401	LA MANCHA AV PIPELINE EXTENSION PROJECT 36" WM & FM & 2 Dir Drills	30" FM / 36" WM 4 Aquaeous Crossing 2-36" Dir. Drills	$4,959,963.00	2007
BROWARD COUNTY WATER & WASTE ENGINEERING DIVISION 2555 W COPANS ROAD POMPANO BEACH, FL 33069	RIC-MAN INTERNATIONAL / CHEN & ASSOC DESIGN BUILD TEAM	DESIGN/BUILD FOR REPLACEMENT OF 48" FORCE MAIN Project No. 9088	48" FM Design Build	$4,418,669.00	2007
CITY OF BOCA RATON 201 W. PALMETTO PARK ROAD BOCA RATON, FL 33432	LBFH, INC. WEST PALM BEACH	CITY OF BOCA UTILITY DRAINAGE IMPROVEMENTS AREA II	4900' - 8" WM 4700' - 8" SAN 4600' DRNG 18" - 42" 1 Pump Station Businesses 230	$2,498,446.00	2007
MIAMI-DADE W&S DEPT 4900 LeJeune Rd Coral Gables, FL	MDWSD Ric-Man Intl In-House Design Build	INSTALLATION OF 30" WM CROSSING MIAMI RIVER CANAL AT SW 2ND ST CONTRACT W-863 1-36" Dir Drill	1,400' 30" DIP Dir. Drill Design Build	$1,474,371.00	2007
NORTHERN PALM BEACH COUNTY IMPROVEMENTS 357 HIATT DRIVE PALM BEACH GARDENS, FL 33416	WANTMAN GROUP WEST PALM BEACH DAVE BROBST	OFFSITE DIRECTIONAL BORES (5) 12" to 18" Dir Drills	18" WM 12" FM 5 Dir. Drills TPK, I-95 & Canal	$1,768,976.00	2007
MIAMI-DADE W&S DEPT 4900 LeJeune Rd Coral Gables, FL	MIAMI-DADE W&S DEPT.	NE 163 ST Emergency Repair of 42" Sewer	150' of 42"	$848,027.00	2007
NORTH BAY VILLAGE 1666 Kennedy Causeway #700 North Bay Village, FL 33141	RIC-MAN INT'L, INC. Design Build in-house	DESIGN/BUILD REPAIR OF 8" FM UNDER BISCAYNE BAY 1-8" Dir Drill	12" FM Dir Drill Under Bisc. Bay Design Build	$900,000.00	2007
CITY OF LAUDERHILL 2000 CITY HALL DRIVE LAUDERHILL, FL 33313	CORZO CASTELLA CARBALLO THOMPSON, P.A. FT. LAUDERDALE, FL	NW 16TH STREET FORCE MAIN EXTENSION 1-16" Dir Drill	8" TO 16" FM Dir Drill	$731,133.00	2007
CITY OF MIAMI BEACH CITY HALL 1700 CONVENTION CTR DRIVE MIAMI BEACH, FL 33139	APCTE Engineering & Ric-Man Int'l	DESIGN/BUILD Indian Creek 12" WM Replacement for DOT Emergency	12" WM Design Build	$618,034.00	2007
Related Group	N/A	North South River Dr	20" Sanitary	$534,994.00	2007
BROWARD COUNTY OES 2555 W. Copans Rd Pompano Beach, FL	CHEN AND ASSOCIATES	ST GEORGE EAST NEIGHBORHOOD IMPROVEMENT PROJECT 1-Submersable PS & 1-24" Dir Drill	8" DIP WM TO 8"-15" PVC SAN Residents 443 1,400 ft Dir Drill	$10,281,537.00	2006
CITY OF PLANTATION 400 NW 73rd AVENUE PLANTATION, FL 33317	RIC-MAN INT'L, INC. Design Build in-house	DESIGN/BUILD TURNPIKE & SUNRISE BLVD BID # 031-05	3-Dir Drills Under Tpk 1000' -30" Casing - 560' - 16" Casing - 760' -10" Casing 1- Aerial X-ing Design Build	$1,568,992.00	2006

OWNER	ENGINEER	CONTRACT	DESCRIPTION	FINAL AMOUNT	COM-PLETED YEAR
CITY OF LAUDERHILL 2000 CITY HALL DRIVE LAUDERHILL, FL 33313	A.D.A ENGINEERING, INC. 11401 S.W. 40TH. ST. STE 470 MIAMI, FL 33165	NW 56TH. AVENUE WATER & SEWER IMPROVEMENTS	10", 12", 16" DIP WM, 12" DIP FM	$1,384,895.00	2006
CITY OF MIAMI BEACH CITY HALL 1700 CONVENTION CTR DRIVE MIAMI BEACH, FL 33139	CITY OF MIAMI BEACH CITY HALL 1700 CONVENTION CTR DRIVE MIAMI BEACH, FL 33139	MIAMI BEACH HIGH SCHOOL "SUFFOLK CONSTRUCTION, INC."	30" F.M.	$205,362.00	2006
CITY OF MIAMI BEACH CITY HALL 1700 CONVENTION CTR DRIVE MIAMI BEACH, FL 33139	N/A	Julia Tuttle Emergency 36" WM Repair	36"	$51,635.00	2006
CITY OF LAUDERHILL 2000 CITY HALL DRIVE LAUDERHILL, FL 33313	N/A	Emergency Sanitary Repair	8" Pipe and Manhole	$9,416.00	2006
HOLLYWOOD HOSPITAL	N/A	HOLLYWOOD HOSPITAL SANITARY LATERAL	6"	$65,000.00	2006
VILLAGE OF WELLINGTON 14000 GREENBRIAR BLVD. WELLINGTON, FL 33414	ARCADIS REESE, MACON & ASSOC. LAKE WORTH, FL 33463	WATER TRANSMISSION MAIN EXTENSION PHASE I	Construct 62K 24" PVC and 650 24" DIP, 1 Aerial Crossing	$1,034,877.00	2006
BROWARD COUNTY OES 2555 W. Copans Rd Pompano Beach, FL	Craven Thompson & Associates 3563 NW 53rd. St. Ft. Lauderdale, FL 33309	ROOSEVELT GARDENS NORTH CENTRAL COUNTY NEIGHBORHOOD IMPROVEMENT PROJECT	26,277' OF 15" TO 24" RCP Residents 530	$8,484,930.00	2005
BROWARD COUNTY OES 2555 W. Copans Rd Pompano Beach, FL	CHEN AND ASSOCIATES	ST GEORGE WEST NEIGHBORHOOD IMPROVEMENT PROJECT 1-SUBMERSIBLE PUMP STATION	15"-36" RCP 29,000' 8" WM 26,000' 8"-16"SAN Residents 520	$7,335,512.00	2005
MIAMI-DADE W&S DEPT 4900 LeJeune Rd Coral Gables, FL	DESIGN BUILD RIC-MAN INTERNATIONAL, INC. / NOVA CONSULTING 10486 NW 31 Terr, Miami 305-436-9200	DESIGN/BUILD DERM01-WASD-NLE-WEST 54" FORCE MAIN PROJECT	9,100' OF 54" PCCP Design Build	$6,649,092.00	2005
VILLAGE OF WELLINGTON 14000 GREENBRIAR BLVD. WELLINGTON, FL 33414	ARCADIS REESE, MACON & ASSOC. LAKE WORTH, FL 33463	VILLAGE OF WELLINGTON WATER TRANSMISSION MAIN EXTENSION PHASE I	16" to 24" PVC & DIP	$1,034,877.00	2005
CITY OF FT. LAUDERDALE 100 N. ANDREWS AVE FT. LAUDERDALE, FL	N/A	EMERGENCY CLEAN-UP DUE TO HURRICANE WILMA	N/A	$810,275.00	2005
CITY OF FT. LAUDERDALE 100 N. ANDREWS AVE FT. LAUDERDALE, FL	N/A	EMERGENCY CLEAN-UP DUE TO HURRICANE KATRINA	N/A	$567,948.00	2005
CITY OF LAUDERHILL 2000 CITY HALL DRIVE LAUDERHILL, FL 33313	N/A	Emergency Repair of FM Aerial Crossing	30" Pipe Repair on Aerial Crossing	$104,536.00	2005
MIAMI-DADE W&S DEPT 4900 LeJeune Rd Coral Gables, FL	MIAMI-DADE W&S DEPT.	Replacement of 6" FM Aerial Crossing at Oleta River 718-10	8"	$87,000.00	2005
BROWARD COUNTY OES 2555 W. Copans Rd Pompano Beach, FL	N/A	EMERGENCY REPAIRS OF WATERMAIN DUE TO HURRICANE WILMA	3 LOCATIONS 6" TO 10"	$23,585.00	2005
CITY OF PLANTATION 400 NW 73rd AVENUE PLANTATION, FL 33317	N/A	EMERGENCY REPAIRS OF WATERMAIN DUE TO HURRICANE WILMA	1 LOCATION 8"	$13,236.00	2005
MIAMI-DADE W&S DEPT 4900 LeJeune Rd Coral Gables, FL	MIAMI-DADE W&S DEPT.	WATERMAIN & FORCEMAIN RELOCATION SW 8TH STREET & 132ND AVENUE	30" WM 24" FM	$1,027,674.00	2004

OWNER	ENGINEER	CONTRACT	DESCRIPTION	FINAL AMOUNT	COM-PLETED YEAR
FLORIDA DOT 1000 NW 111th AVENUE MIAMI, FL	FLORIDA DOT 1000 NW 111th AVENUE MIAMI, FL	REPAIR AND UPGRADE OF DRAINAGE SYSTEMS IN MIAMI-DADE COUNTY	15" - 48" RCP	$1,013,375.00	2004
MIAMI-DADE W&S DEPT 4900 LeJeune Rd Coral Gables, FL	MIAMI-DADE W&S DEPT.	LUDLAM CANAL WATER CONTROL STRUCTURE	12' Galvanized STEEL CULVERT	$333,738.00	2004
CITY OF SUNRISE 777 Sawgrass Corporate Parkway Sunrise, FL	Miller Legg and Associates	SW 136TH AVE WATER MAIN INTERCONNECTION	1,050' OF 6" - 12" DIP	$129,262.00	2004
CITY OF CORAL GABLES	OWNER	ANNUAL CONTRACT	Sewer & Pump Station		2003
PALM BEACH COUNTY BOCC 160 Australian Ave West Palm Beach, FL	OWNER	HAGEN RANCH RD UTILITY & STORM SEWER INSTALLATION	15" - 72" RCP 4,520'-42" DIP	$13,186,982.00	2003
MARTIN COUNTY BOCC 2401 SE Monterrey Rd. Stuart, FL.		MARTIN COUNTY COLORADO AVE IMPROVEMENTS	2,912 LF OF 15" TO 36" RCP	$1,297,380.00	2003
MIAMI-DADE W&S DEPT 4900 LeJeune Rd Coral Gables, FL	MIAMI-DADE W&S DEPT.	EMERGENCY REPAIR OF 54" FLAGLER INTERCEPTOR	1,400 LF 54" PCCP	$951,180.00	2005
KVC Constructors, Inc. 9499 NE 2nd Avenue, Suite 205 Miami Shores, FL 33138		Contract No. 03-MBAL SSDI North & South Improvements	72" Storm Drainage 20" WM Relocation Alton Rd Temp Realignment	$807,935.00	2003
John Moriarty & Asc. of Florida, 4411 Sheridan Street Hollywood, FL 33021	Creech Engineers, Inc.	BEACH CLUB SITE WORK at A1A	Drainage WM SAN Conc Flat Wk	$485,922.00	2003
BROWARD COUNTY OES 2555 W. Copans Rd Pompano Beach, FL	CHEN AND ASSOCIATES	WASHINGTON PARK WATERMAIN REPLACEMENT & STORM SEWER	6"-8" DIP 15" TO 36" RCP Residents 620	$8,045,603.00	2002
BROWARD COUNTY OES 2555 W. Copans Rd Pompano Beach, FL	Miller Legg and Associates	NORTH ANDREWS GARDENS NEIGHBORHOOD IMPROVEMENTS PROJECT with Pump Station	54,663', 2"-36" WM Residents 280 1,400 ft dir Drill MicroTunnel I-95	$5,735,131.00	2002
FLORIDA DOT 3400 W. Commercial Blvd Ft. Lauderdale, FL	FLORIDA DOT 3400 W. Commercial Blvd Ft. Lauderdale, FL	NW 52ND AVE BRIDGE	15" - 36" RCP	$1,169,652.00	2002
CITY OF SUNRISE 777 Sawgrass Corporate Parkway Sunrise, FL	Miller Legg and Associates	SW AREA FORCEMAIN EXTENSION 1-20" Dir Drill	12" DIP 2000' 15" HDPE	$680,756.00	2002
Village Of Tequesta Public Works Facility 136 Bridge Road Tequesta, FL	Rees Macon and Assoc	WATERMAIN REPLACEMENT & DRAINAGE SYSTEM IMPROVEMENTS	5,800' - 18" 42" Drain 27,400' - 6"-8" WM Residents 100	$2,308,163.00	2001
FLORIDA DOT 1000 NW 111th AVENUE MIAMI, FL	FLORIDA DOT 1000 NW 111th AVENUE MIAMI, FL	REPAIR AND UPGRADE OF DRAINAGE SYSTEMS IN MIAMI-DADE COUNTY	7,214' RCP 15"- 48"	$988,164.00	2001
MIAMI-DADE W&S DEPT. DOUGLAS BLDG 3071 SW 38TH AVE. MIAMI, FL.	MIAMI-DADE W&S DEPT. Design Build in-house	DESIGN/BUILD EMERGENCY REPAIR BISCAYNE BAY	10' of '72" PCCP Design Build	$498,750.00	2001
CITY OF FT. LAUDERDALE 100 N. ANDREWS AVE FT. LAUDERDALE, FL	CH2MHill	NW INDUSTRIAL AREA SANITARY & STORM SEWER IMPROVEMENT 3- Pumps Stations	37,623' 8"-24" Businesses 265	$4,335,000.00	2000
BROWARD COUNTY AVIATION DEPT	URS	RAILROAD MICRO TUNNEL PROJECT	9,111' RCP 15"- 48" Under FEC	$1,633,416.00	2000
MISENER MARINE CONSTRUCTION		PIPELINE PROJECT SAN PEDRO DE MACORIS DOMINICAN REPUBLIC 1-20" Dir Drill	900' DD 20"	$800,000.00	2000

OWNER	ENGINEER	CONTRACT	DESCRIPTION	FINAL AMOUNT	COM-PLETED YEAR
SOUTH CENTRAL REGIONAL WASTEWATER TREATMENT DISPOSAL BOARD	MIAMI-DADE W&S DEPT.	EMERGENCY REPAIR WEST 8THV AVE IN HIALEAH	48" PCCP	$325,001.00	2000
MDM OFFICE GROUP, LTD. 1111 BRICKELL AVE. MIAMI, FL	TURNER CONSTRUCTION	SEWER MAIN EXTENSION	30" SAN	$333,487.00	2000
MIAMI-DADE W&S DEPT 4900 LeJeune Rd Coral Gables, FL	MIAMI-DADE W&S DEPT.	EMERGENCY REPAIR S.W 122 AVE & 76 ST	48" PCCP	$115,280.00	2000
CITY OF MIAMI 444 SW 2nd AVENUE MIAMI, FLORIDA	Carney Newhouse Hazen & Sawyer & Ric-Man Intl. Design Build HDD	WATSON ISLAND SANITARY SEWER SYSTEM SUBMERSIBLE PS B5590	8" Micro Tunnel under I-395 - Sanitary Sewer System w/ 1 PS - Design Build 16" HDD under Intracoastal	$1,729,069.00	1999
SOUTH CENTRAL REGIONAL WASTEWATER TREATMENT DISPOSAL BOARD		NW REUSE SYSTEM RECLAIMED TRANSMISSION MAIN J&B	16" thru 42"	$2,200,000.00	1999
MIAMI-DADE W&S DEPT 4900 LeJeune Rd Coral Gables, FL	MIAMI-DADE W & S AUTHORITY	INTERCONNECTION AT PUMP STATION 2 & CENTRAL DISTRICT WWTP	150' of '120" PCCP	$1,876,050.00	1999
CITY OF MIAMI BEACH CITY HALL 1700 CONVENTION CTR DRIVE MIAMI BEACH, FL 33139	CITY OF MIAMI BEACH CITY HALL 1700 CONVENTION CTR DRIVE MIAMI BEACH, FL 33139	REPAIR 36" WATERMAIN AT JULIA TUTTLE CAUSEWAY 1-36" Directional Drill	600' 36" Directional Drill	$836,424.00	1999
MIAMI-DADE W&S DEPT 4900 LeJeune Rd Coral Gables, FL	MIAMI-DADE W&S DEPT.	20" WM in NW 7th Av NW 113St - NW 135 St	8,257' 8"-24"	$640,037.00	1999
CITY OF DEERFIELD BEACH 200 Goolsby Blvd. Deerfield Beach, FL	CITY OF DEERFIELD BEACH 200 Goolsby Blvd. Deerfield Beach, FL	COVE BEACH CLUB RIGHT-OF-WAY IMPROVEMENTS	12", 15", 24"	$485,853.00	1999
MIAMI-DADE W&S DEPT 4900 LeJeune Rd Coral Gables, FL	MIAMI-DADE W & S AUTHORITY	FORCEMAIN SL1022-A SW 352nd ST.	8"	$427,283.00	1999
CITY OF DEERFIELD BEACH 200 Goolsby Blvd. Deerfield Beach, FL	CITY OF DEERFIELD BEACH 200 Goolsby Blvd. Deerfield Beach, FL	NW AREA SANITARY GRAVITY SEWER LINES PROJECT #10949-P	8"	$252,828.00	1999
VILLAGE OF TEQUESTA 357 TEQUESTA DRIVE TEQUESTA, FL	Rees Macon and Assoc	MASTER DRAINAGE IMPROVEMENTS	15" 18" 24"	$309,895.00	1998
BROWARD COUNTY OES 2555 W. Copans Rd Pompano Beach, FL		REGIONAL WATER SUPPLY FLUSHING MAIN	30" DIP	$84,989.00	1998
MIAMI-DADE W&S DEPT 4900 LeJeune Rd Coral Gables, FL	MIAMI-DADE W & S AUTHORITY	Forcemain Installation CL-74A	12" FM	$618,319.00	1998
MIAMI-DADE W&S DEPT 4900 LeJeune Rd Coral Gables, FL	MIAMI-DADE W & S AUTHORITY	Sanitary Restoration Program C7-F Contract S-319F	8" SAN	$868,000.00	1997
MIAMI-DADE W&S DEPT 4900 LeJeune Rd Coral Gables, FL	MIAMI-DADE W & S AUTHORITY	Sanitary Restoration Program C7-A Contract S-319A	8" SAN	$628,000.00	1997
MIAMI-DADE W&S DEPT 4900 LeJeune Rd Coral Gables, FL	MIAMI-DADE W & S AUTHORITY	SUNNY ISLES BLVD. 48" PCCP FM and MICRO TUNNEL S-615	1300' - 48" 200' Micro Tunnel Under Intr Coastal	$2,900,000.00	1997
MIAMI-DADE W&S DEPT 4900 LeJeune Rd Coral Gables, FL	Post, Buckley, Schu & Jernigan	36" FORCEMAIN SW 32ND ST. SL779	36" FM	$1,680,000.00	1997

OWNER	ENGINEER	CONTRACT	DESCRIPTION	FINAL AMOUNT	COM-PLETED YEAR
MIAMI-DADE W&S DEPT 4900 LeJeune Rd Coral Gables, FL	MIAMI-DADE W & S AUTHORITY	W-769 NW 54 ST INSTALLATION OF 16" WATERMAIN NW 35TH AVE. TO NW 19TH AVE. ER#14514	16" WM	$960,000.00	1997
MIAMI-DADE W&S DEPT 4900 LeJeune Rd Coral Gables, FL	Post, Buckley, Schu & Jernigan	FORCEMAIN 144, 183, 153 &153A NW 135TH AVE. MF-040 LANZO MGMT. TEAM	12" FM	$772,700.00	1997
MIAMI-DADE W&S DEPT 4900 LeJeune Rd Coral Gables, FL	Post, Buckley, Schu & Jernigan	Improvements of Subsystem 793 PS 791, 794 & FM 792 SW72 ST. & SW109 PL. CSS MGMT. TEAM 1-Submersible Pump Station	8" Force Mains and Pump Station	$668,662.00	1997
MIAMI-DADE W&S DEPT 4900 LeJeune Rd Coral Gables, FL	Post, Buckley, Schu & Jernigan	8" & 12" FORCEMAIN NW 207TH ST. NL448	8" & 12" FM	$604,064.00	1997
MIAMI-DADE W&S DEPT 4900 LeJeune Rd Coral Gables, FL	Post, Buckley, Schu & Jernigan	PUMP STATION 153 UPGRADE SW 136TH AVE. LZ-153 LANZO MGMT. TEAM 1-Submersible PS	8" Force Mains and Pump Station	$451,900.00	1997
MIAMI-DADE W&S DEPT 4900 LeJeune Rd Coral Gables, FL	Post, Buckley, Schu & Jernigan	8" & 12" FORCEMAIN NL 395	8" & 12" FM	$430,475.00	1997
MIAMI-DADE W&S DEPT 4900 LeJeune Rd Coral Gables, FL	MIAMI-DADE W & S AUTHORITY	NORTH DISTRICT WASTEWATER TREATMENT PLANT HARRY PEPPER & ASSOC.	1,686 LF 72" PCCP FM	$421,575.00	1997
MIAMI-DADE W&S DEPT 4900 LeJeune Rd Coral Gables, FL	Post, Buckley, Schu & Jernigan	PUMP STATION 144 SW 2ND AVE. LANZO MGMT. TEAM 1-Submersible Pump Station	8" & 10" Force Mains and Pump Station	$380,000.00	1997
CITY OF DELRAY BEACH 444 SWINTON AVENUE DELRAY BEACH, FL	CITY OF DELRAY BEACH 444 SWINTON AVENUE DELRAY BEACH, FL	HIGHLAND BEACH 16" FORCEMAIN RECONSTRUCTION	16" FM	$368,706.00	1997
MIAMI-DADE W&S DEPT 4900 LeJeune Rd Coral Gables, FL	Post, Buckley, Schu & Jernigan	12" FORCEMAIN NW 71ST ST. CL51 1-12" Dir Drill	12" FM and Dir Drill Under Canal	$306,246.00	1997
MIAMI-DADE W&S DEPT 4900 LeJeune Rd Coral Gables, FL	Post, Buckley, Schu & Jernigan	INSTALLATION OF 12" FM IN SW 104TH AVE. & SW 99TH AVE. SL-718 CSS MGMT. TEAM	12" FM	$300,000.00	1997
MIAMI-DADE W&S DEPT 4900 LeJeune Rd Coral Gables, FL	Post, Buckley, Schu & Jernigan	Pump Station #797 SW 79th Ave. & SW 86th ST. ER#45124 CSS MGMT. TEAM 1-Submersible Pump Station	8" Force Mains and Pump Station	$260,000.00	1997
MIAMI-DADE W&S DEPT 4900 LeJeune Rd Coral Gables, FL	Post, Buckley, Schu & Jernigan	12" FORCEMAIN NW 25TH ST. CL158	12" FM	$244,844.00	1997
MIAMI-DADE W&S DEPT 4900 LeJeune Rd Coral Gables, FL	Post, Buckley, Schu & Jernigan	8" FORCEMAIN EUREKA DRIVE SL 1059	8" FM	$239,156.00	1997
MIAMI-DADE W&S DEPT 4900 LeJeune Rd Coral Gables, FL	Post, Buckley, Schu & Jernigan	12" FORCEMAIN SW 47TH ST. SL612	12" FM	$238,849.00	1997
MIAMI-DADE W&S DEPT 4900 LeJeune Rd Coral Gables, FL	Post, Buckley, Schu & Jernigan	NE 164TH ST. 8" FORCEMAIN NL313	8" FM	$202,890.00	1997
CITY OF FT. LAUDERDALE 100 N. ANDREWS AVE FT. LAUDERDALE, FL	CITY OF FT. LAUDERDALE 100 N. ANDREWS AVE FT. LAUDERDALE, FL	NW 12TH AVE. STORM DRAINAGE & ROAD CONSTRUCTION	15" - 42" DRAINAGE	$174,122.00	1997
MIAMI-DADE W&S DEPT 4900 LeJeune Rd Coral Gables, FL	MIAMI-DADE W & S AUTHORITY	48" EMERGENCY REPAIR FM OKEECHOBEE RD. & NW 16TH AV	48" FM	$173,000.00	1997

OWNER	ENGINEER	CONTRACT	DESCRIPTION	FINAL AMOUNT	COM-PLETED YEAR
MIAMI-DADE W&S DEPT 4900 LeJeune Rd Coral Gables, FL	MIAMI-DADE W & S AUTHORITY	REHABILITATION WATERMAIN ON GROVE ISLE BRIDGE	8" AERIAL	$160,300.00	1997
MIAMI-DADE W&S DEPT 4900 LeJeune Rd Coral Gables, FL	MIAMI-DADE W & S AUTHORITY	54" EMERGENCY REPAIR WATERMAIN RED ROAD & NW 60TH ST.	733" of '54" PCCP FM	$146,500.00	1997
MIAMI-DADE W&S DEPT 4900 LeJeune Rd Coral Gables, FL	MIAMI-DADE W & S AUTHORITY	24" WM in SW 21st St Contract 527	24" DIP WM	$662,000.00	1986
MIAMI-DADE W&S DEPT 4900 LeJeune Rd Coral Gables, FL	MIAMI-DADE W & S AUTHORITY	Dixie Highway Water & Sewer Improvement S-427 DIVISION 1 1-Submersible PS	8" & 10" Force Mains and Pump Station	$2,527,742.00	1996
MIAMI-DADE W&S DEPT 4900 LeJeune Rd Coral Gables, FL	MIAMI-DADE W & S AUTHORITY	FLAGLER ST. FORCEMAIN S503D DIVISION 1	7,195 LF 54" PCCP FM	$1,115,222.00	1996
MIAMI-DADE W&S DEPT 4900 LeJeune Rd Coral Gables, FL	MIAMI-DADE W & S AUTHORITY	INTERCONNECTION TO THE EXISTING 60" FM VARIOUS LOCATIONS S-617	3,118 LF 60" PCCP	$935,300.00	1996
CITY OF LAKE WORTH 7 North Dixie Highway Lake Worth, FL 33460	Mock Roos & Assoc	N. GOLFVIEW DRIVE SANITARY SEWER REHABILITATION	8" SAN	$528,536.00	1996
MIAMI-DADE W&S DEPT 4900 LeJeune Rd Coral Gables, FL	Post, Buckley, Schu & Jernigan	PUMP STATION CP-8 CSS MANAGEMENT TEAM 1-SUBMERSIBLE PS	8" Force Mains and Pump Station	$340,107.00	1996
CITY OF DELRAY BEACH 444 SWINTON AVENUE DELRAY BEACH, FL	CITY OF DELRAY BEACH 444 SWINTON AVENUE DELRAY BEACH, FL	NE 7TH AVE. UTILITY & ROADWAY IMPROVEMENTS	Residents 100	$247,713.00	1996
MIAMI-DADE W&S DEPT 4900 LeJeune Rd Coral Gables, FL	Post, Buckley, Schu & Jernigan	KENDALL AREA FM IMPRVTS. SW 119TH CT. & BIRD ROAD SL-657 CSS MANAGEMENT TEAM	8" FM	$141,958.00	1996
MIAMI-DADE W&S DEPT 4900 LeJeune Rd Coral Gables, FL	MIAMI-DADE W & S AUTHORITY	EMERGENCY REPLACEMENT OF MH NW 7TH AV & NW 135 TO 128 ST.	8" SAN	$141,753.00	1996
MIAMI-DADE W&S DEPT 4900 LeJeune Rd Coral Gables, FL	MIAMI-DADE W & S AUTHORITY	WATER & SEWER IMPROVEMENTS SW127TH AVE. S605 B DIVISION 1	24" WM	$2,415,760.00	1995
MIAMI-DADE W&S DEPT 4900 LeJeune Rd Coral Gables, FL	MIAMI-DADE W & S AUTHORITY	48" DI FM Between PS 300 & NW 47TH AVE. S-467	48" DIP FM	$2,032,555.00	1995
MIAMI-DADE W&S DEPT 4900 LeJeune Rd Coral Gables, FL	MIAMI-DADE W & S AUTHORITY	WATER & SEWER IMPROVEMENTS SW 127TH AVE. S605A DIVISION 3 Across Kendall Dr	5,321 LF 72" PCCP Force Main	$1,289,510.00	1995
MIAMI-DADE W&S DEPT 4900 LeJeune Rd Coral Gables, FL	MIAMI-DADE W & S AUTHORITY	WATER & SEWER IMPROVEMENTS SW 117th Ave. S605B DIVISION 1 Across SW 104 St	5,471 LF 72" PCCP Force Main	$1,797,015.00	1995
MIAMI-DADE W&S DEPT 4900 LeJeune Rd Coral Gables, FL	MIAMI-DADE W & S AUTHORITY	SW WELLFIELD 72" RAW WATERMAIN W747A	2,009 LF 72" PCCP Raw Water Main	$667,160.00	1995
BROWARD COUNTY OES 2555 W. Copans Rd Pompano Beach, FL	BROWARD COUNTY OES 2555 W. Copans Rd Pompano Beach, FL	NORTH SYSTEM TRANSMISSION MAIN BID PACK 7 24"-36" RAW W IMPR.	24" & 36" DIP WM	$3,720,137.00	1994

OWNER	ENGINEER	CONTRACT	DESCRIPTION	FINAL AMOUNT	COM-PLETED YEAR
BROWARD COUNTY OES 2555 W. Copans Rd Pompano Beach, FL	BROWARD COUNTY OES 2555 W. Copans Rd Pompano Beach, FL	SOUTH SYSTEM TRANSMISSION MAIN BID PACKAGE 4 24"-36" RAW WATER IMPR.	24" & 36" DIP WM	$2,623,260.00	1994
MIAMI-DADE W&S DEPT 4900 LeJeune Rd Coral Gables, FL	MIAMI-DADE W & S AUTHORITY	24" WM 45th to 49th Ave	24" DIP WM	$272,748.00	1995
MIAMI-DADE W&S DEPT 4900 LeJeune Rd Coral Gables, FL	MIAMI-DADE W & S AUTHORITY	Sewer Rehab Fiberglass Sliplinning of existing 48" FM - Dixie Highway & Near SW 17th St	48" FIBERGLASS SLIP-LINE	$329,607.00	1995
MIAMI-DADE W&S DEPT 4900 LeJeune Rd Coral Gables, FL	MIAMI-DADE W & S AUTHORITY	96" Raw Watermain in SW 72nd St, SW 157th Av - SW 172 Av W-637	11,742 LF 96" PCCP Water Main	$1,174,162.00	1994
MIAMI-DADE W&S DEPT 4900 LeJeune Rd Coral Gables, FL	MIAMI-DADE W & S AUTHORITY	48" DI Forcemain Between PS #307 & NW 42ND AVE. S-459	48" DIP FM	$915,951.00	1994
MIAMI-DADE W&S DEPT 4900 LeJeune Rd Coral Gables, FL	MIAMI-DADE W & S AUTHORITY	Miami River Bridge Cont. 520	N/A	$331,700.00	1984
MIAMI-DADE W&S DEPT 4900 LeJeune Rd Coral Gables, FL	MIAMI-DADE W & S AUTHORITY	GRAVITY SEWER SYSTEM S-498B 2-SUBMERSIBLE PS	8" Gravity Sewer, Force Mains and Pump Station	$709,390.00	1994
CITY OF DELRAY BEACH 444 SWINTON AVENUE DELRAY BEACH, FL	CITY OF DELRAY BEACH 444 SWINTON AVENUE DELRAY BEACH, FL	SANITARY SEWER SYSTEM REHABILITATION	8" SAN SEWER Residents 180	$494,589.00	1994
FLORIDA DOT 1000 NW 111th AVENUE MIAMI, FL	STATE OF FLORIDA DOT	RECONSTRUCTION OF NW 27TH AVE. NW 11TH ST. TO NW 42ND ST. ROADWAY & DRAINAGE	12", 15", 24", 36", & BOX CULVERT Residents/Business 410	$4,861,169.00	1993
MIAMI-DADE W&S DEPT 4900 LeJeune Rd Coral Gables, FL	MIAMI-DADE W & S AUTHORITY	Countywide Annual "B" Clean, TV & Grout # S-498B	8" & 10"	$1,144,185.00	1993
CITY OF FT. LAUDERDALE 100 N. ANDREWS AVE FT. LAUDERDALE, FL	CH2MHill	PUMP STATIONS A-40 & A-A2 FM SANITARY SEWER, & WATER MAINS FOR TARPON RIVER 1-SUBMERSIBLE PUMP STATION	8" FM and PS Residents/Business 260	$1,043,711.00	1993
BROWARD COUNTY OES 2555 W. Copans Rd Pompano Beach, FL	BROWARD COUNTY OES 2555 W. Copans Rd Pompano Beach, FL	DANIA RAW WATER PIPELINE BID PACKAGE 2 PROJECT NO. 1136	16" & 20" DIP WM	$971,818.00	1993
CITY OF DELRAY BEACH 444 SWINTON AVENUE DELRAY BEACH, FL	CITY OF DELRAY BEACH 444 SWINTON AVENUE DELRAY BEACH, FL	SE TRANSMISSION MAIN PART B MILLER TANK TO DOGWOOD DR. & BOCA RATON INTERCONNECT	16" WM	$427,254.00	1993
CITY OF COOPER CITY	CH2MHill	HIATUS ROAD FORCEMAIN 18" FORCEMAIN IMPRVTS. PROJECT SEF21534.P1.00	18" FM	$339,966.00	1993
PALM BEACH COUNTY WATER UTILITIES DEPARTMENT 8100 FOREST HILL BLVD. WEST PALM BEACH, FL 33413	PALM BEACH COUNTY WATER & UTILITIES DEPARTMENT	JOG RD. W. OF INDIAN SPRINGS WM. EXT. PROJ. NO. 90-70 16" DIP WM. IMPRVT. & SUB AQUEOUS CROSSING	16" WM	$294,439.00	1993
FLORIDA DOT 1000 NW 111th AVENUE MIAMI, FL	FLORIDA DOT 1000 NW 111th AVENUE MIAMI, FL	DISCONNECT STORM SEWER FROM SANITARY SEWER SYSTEMS	15" DRAINAGE	$121,005.00	1993

OWNER	ENGINEER	CONTRACT	DESCRIPTION	FINAL AMOUNT	COM-PLETED YEAR
WESTINGHOUSE REMEDIATION SERVICES, INC.	Keith and Schnars	NW 27TH AVENUE PROJECT FDOT STATE CENTERLINE STATION 170+07 PROJECT NO. 87240-3522	REMEDIATION	$111,853.00	1993
BROWARD COUNTY BOCC 115 S. ANDREWS AVENUE FT. LAUDERDALE, FL	BROWARD COUNTY BOCC 115 S. ANDREWS AVENUE FT. LAUDERDALE, FL	72" TWIN CULVERT NW 44th St. & Pine Island Rd. PROJECT NO. 5114	419' of '72" RCP	$83,797.00	1993
MIAMI-DADE W&S DEPT 4900 LeJeune Rd Coral Gables, FL	MIAMI-DADE W & S AUTHORITY	84" EMERGENCY FORCE MAIN SW 7TH ST.	837 LF 84" PCCP	$83,696.00	1993
WESTINGHOUSE REMEDIATION SERVICES, INC.	Keith and Schnars	NW 27TH AVE. PROJECT EXXON TORRES CONTAMINATION & REMEDIATION	REMEDIATION	$43,427.00	1993
BROWARD COUNTY OES 2555 W. Copans Rd Pompano Beach, FL	BROWARD COUNTY BOCC 115 S. ANDREWS AVENUE FT. LAUDERDALE, FL	Broward Estates Interconnect Improvement Project No. M-03-91-31	8", 15", 24" 1- Pump Station Residents 210	$595,696.00	1992
FLORIDA DOT 1000 NW 111th AVENUE MIAMI, FL	N/A	EMERGENCY CLEAN-UP HURRICANE ANDREW	EMERGENCY	$400,000.00	1992
BROWARD COUNTY OES 2555 W. Copans Rd Pompano Beach, FL	BROWARD COUNTY BOCC 115 S. ANDREWS AVENUE FT. LAUDERDALE, FL	DISTRICT 1 PROSPECT ROAD WATERMAIN INTERCONNECT IMPROVEMENT PROJECT NO. 8338	8" WM	$191,475.00	1992
PALM BEACH COUNTY BOCC 160 Australian Ave West Palm Beach, FL	PALM BEACH BOARD OF COUNTY COMMISSIONERS	PUMP STATIONS EC-229 EC-236 EC 241 BYPASS PIPING PROJECT NO. WUD 89-06	42" - 48" DIP FM	$100,562.00	1992
MIAMI-DADE W&S DEPT 4900 LeJeune Rd Coral Gables, FL	MIAMI-DADE W & S AUTHORITY	Miami River Gravity Sewer S.S. T.V. Evaluation & Grouting Repairs S-441	8", 10", 12"	$1,048,000.00	1992
CITY OF DEERFIELD BEACH 200 Goolsby Blvd. Deerfield Beach, FL	CITY OF DEERFIELD BEACH 200 Goolsby Blvd. Deerfield Beach, FL	DRAINAGE REHABILITATION AT SE 11TH ST. PROJECT NO. 10780-P	15" DRAINAGE	$67,717.00	1992
PALM BEACH COUNTY BOCC 160 Australian Ave West Palm Beach, FL	PALM BEACH BOARD OF COUNTY COMMISSIONERS	15"-54" SPIRAL WALL RIB "HI-FLOW" STEEL PIPE PROJECT NO. 87017	5559' of 15" & 54" DRAINAGE	$3,613,403.00	1991
CITY OF BOCA RATON 201 W. PALMETTO PARK ROAD BOCA RATON, FL 33432	CITY OF BOCA RATON 201 W. PALMETTO PARK ROAD BOCA RATON, FL 33432	GRAVITY SEWER & WM.	18"-66" RCP, 18"-42" FR DR, 8"-16" SAN, & 8" WM Residents 250	$2,305,572.00	1991
CITY OF DELRAY BEACH 444 SWINTON AVENUE DELRAY BEACH, FL	CITY OF DELRAY BEACH 444 SWINTON AVENUE DELRAY BEACH, FL	16" DIP WATERMAIN & SUB AQUEOUS CROSSING PROJECT NO. 91-24	16" WM	$564,508.00	1991
BROWARD COUNTY BOCC 115 S. ANDREWS AVENUE FT. LAUDERDALE, FL	BROWARD COUNTY BOCC 115 S. ANDREWS AVENUE FT. LAUDERDALE, FL	60", 72" & 84" RCP REINFORCED CONCRETE PIPE	60" 72" 84" DRAINAGE	$200,000.00	1991
MIAMI-DADE W&S DEPT 4900 LeJeune Rd Coral Gables, FL	MIAMI-DADE W & S AUTHORITY	84" PCCP & VALVE ALEXANDER ORTEGA JR. WATER TREATMENT PLANT CONTRACT NO. W-567	490' 84" PCCP	$98,000.00	1991

OWNER	ENGINEER	CONTRACT	DESCRIPTION	FINAL AMOUNT	COM-PLETED YEAR
OCEAN BAY HOLDINGS		SITE IMPROVEMENTS OF LUCON ADDITIONS PHASE I 8" DIP WATERMAIN & 8" PVC SEWER MAIN IMPROVEMENTS	8" PVC SAN	$95,000.00	1991
BROWARD COUNTY OES 2555 W. Copans Rd Pompano Beach, FL	BROWARD COUNTY BOCC 115 S. ANDREWS AVENUE FT. LAUDERDALE, FL	24" FORCEMAIN & VARIOUS DEMOLITION	24" FM	$81,857.00	1991
CITY OF TAMARAC	CITY OF TAMARAC	TAMARAC WILDLIFE REFUGE 8" DIP SEWER REHAB CONTRACT NO. 90-10A	8" FM	$18,911.00	1991
NORTH BAY VILLAGE 1666 Kennedy Causeway #700 North Bay Village, FL 33141	NORTH BAY VILLAGE 1666 Kennedy Causeway #700 North Bay Village, FL 33141	79TH ST. CAUSEWAY FM REHABILITATION 8" FM REPAIR FDER PROJECT NO. 80-30-11	8" DIP FM	$15,150.00	1991
CITY OF WEST PALM BEACH	CITY OF WEST PALM BEACH	40TH ST. STORM SEWER REHABILITATION PROJECT 15" THRU 54" REINFORCED CONCRETE PIPE	15", 24", 36", 48", 54" Residents 180	$606,512.00	1990
PALM BEACH COUNTY BOCC 160 Australian Ave West Palm Beach, FL	PALM BEACH BOARD OF COUNTY COMMISSIONERS	15"-60" CONCRETE PIPE CULVERT 15"-36" CAP JOG ROAD FROM S. MELALEUCA LANE TO LAKE WORTH RD.	15", 24", 36", 48", 60" DRAINAGE	$333,362.00	1990
CITY OF WEST PALM BEACH	CITY OF WEST PALM BEACH	SUPPLEMENTAL WELLFIELD 16"-36" PCCP RAW WM 10 PRODUCTION WELLS CONTRACT NO. 1	16", 24", 36" PCCP	$2,137,746.00	1989
CITY OF LAKE WORTH 7 North Dixie Highway Lake Worth, FL 33460	Mock Roos & Assoc	STORM DRAINAGE IMPROVEMENTS 1985 BOND ISSUE PHASE III 12" THRU 54" RCP STORM DRAINAGE	12", 24", 36", 48", 54" Residents 250	$2,116,062.00	1989
City of Oakland Park 3650 NE 12th Ave Oakland Park, FL 33334	CDM	SANITARY SEWER EXT. 8" & 10" PVC SEWER, 4", 6" & 8" DIP WATER	2- Pump Stations	$1,699,526.00	1989
MIAMI-DADE W&S DEPT 4900 LeJeune Rd Coral Gables, FL	MIAMI-DADE W & S AUTHORITY	167TH ST. SAN SEWER IMPROVEMENT PROJECT DIV 1 & 2 CONTRACT NO. S-333 2-PS	10" Sanitary & Pump Station Residents 320	$1,589,825.00	1989
CITY OF TAMARAC		WASTEWATERMAIN TRANSMISSION SYSTEM	12" - 24" DRAINAGE		1989
CITY OF LAKE WORTH 7 North Dixie Highway Lake Worth, FL 33460	Mock Roos & Assoc	NW INDUSTRIAL AREA WASTEWATER COLLECTION SYSTEM, SOUTH SECTION 8" SEWER 6" WM 1 Submersible PS	8" DIP FM Residents 240	$639,939.00	1989
MIAMI-DADE W&S DEPT 4900 LeJeune Rd Coral Gables, FL	MIAMI-DADE W & S AUTHORITY	Sewer Replacement at NE 2nd Ave Contract S-383	8" SAN SEWER	$276,000.00	1989
MIAMI-DADE W&S DEPT 4900 LeJeune Rd Coral Gables, FL	MIAMI-DADE W & S AUTHORITY	10" & 12" DIP SEWER 1-SUBMERSIBLE PUMP STATION	10" & 12" DIP FM	$447,015.00	1989
MIAMI-DADE W&S DEPT 4900 LeJeune Rd Coral Gables, FL	MIAMI-DADE W & S AUTHORITY	INSTALLATION OF 24" WM. IN NW 25TH ST. BETWEEN 72ND AVE. & NW 69TH AVE. CONTRACT NO. W-533	24" DIP WM	$336,734.00	1988
PALM BEACH COUNTY BOCC 160 Australian Ave West Palm Beach, FL	PALM BEACH BOARD OF COUNTY COMMISSIONERS	SUPPLEMENTAL WELLFIELD	15"&18"SD, 6"&8"WM 6"&10"DIP SWR	$195,863.00	1989

OWNER	ENGINEER	CONTRACT	DESCRIPTION	FINAL AMOUNT	COM-PLETED YEAR
MIAMI-DADE W&S DEPT 4900 LeJeune Rd Coral Gables, FL	MIAMI-DADE W & S AUTHORITY	SAN SWR RESTR PRGC7 PHS F30"&24" INTERCEPT IN SW19 ST,SW22ST & SW25RD #S319F SLIP LINING USING HDPE	24", 30" SAN SEWER HDPE SLIPLINE PRESSURE PIPE	$910,730.00	1988
MIAMI-DADE W&S DEPT 4900 LeJeune Rd Coral Gables, FL	MIAMI-DADE W & S AUTHORITY	SAN SWR RESTR PRGC7 PHS A 48" INTERCEPT IN NW7ST, NW13AVE TO S. RIVER DR. #S319A SLIP LINING W/ HBP	48" DIP FM SLIP LINE WITH HOBAS PIPE	$551,656.00	1988
MIAMI-DADE W&S DEPT 4900 LeJeune Rd Coral Gables, FL	MIAMI-DADE W & S AUTHORITY	NW WELLFIELD PROTECTIVE CANAL SYSTEM PHASE I DIVISION B CONTRACT NO. W-584B	CANAL EXCAVATION INCL BLASTING	$476,341.00	1988
PORT EVERGLADES		ELLER DR. 16" WATERMAIN EXTENSION CONTRACT NO. 18-87	16" WM	$369,187.00	1988
SETTERLIN CONSTRUCTION	N/A	WEXNER RESIDENCE SITE WORK	6" & 8" WM	$92,250.00	1988
MIAMI-DADE W&S DEPT 4900 LeJeune Rd Coral Gables, FL	MIAMI-DADE W & S AUTHORITY	DOWNTOWN CORAL GABLES SYSTEM BETTERMENT CONTRACT NO. W470-C	20" WM Residents 110	$343,734.00	1987
SETTERLIN CONSTRUCTION	N/A	SAN. SEWAGE COLLECTION & STORM WATER COLLECTION FOR WEXNER RES. 18" RCP STORM DRNGE.	8" SAN & 18" DRAINAGE	$95,753.00	1987
CITY OF MIAMI 444 SW 2nd AVENUE MIAMI, FLORIDA	CITY OF MIAMI	EDGEWATER MEIHBORHOOD IMPROVEMENT	6" WM & 15" TO 30" DRAINAGE	$600,000.00	1986
Florida Dept of Transportation / Community Asphalt		Hollywood Boulevard Widening	15" 42" DRAINAGE	$250,000.00	1986
MIAMI-DADE W&S DEPT 4900 LeJeune Rd Coral Gables, FL	MIAMI-DADE W & S AUTHORITY	BOB-O-LINK DR SAN	8" SAN SEWERS	$242,900.00	1985
TOWN OF PALM BEACH		WORTH AVENUE IMPROVEMENTS			1985
BROWARD LANDFILL CELLS		BROWARD LANDFILL ADDITIONAL 4 CELLS	16" 24"		1985
MIAMI-DADE W&S DEPT 4900 LeJeune Rd Coral Gables, FL	MIAMI-DADE W & S AUTHORITY	DOWNTOWN CORAL GABLES SYSTEM BETTERMENT CONTRACT NO. W470-B	16" & 20" WM	$317,000.00	1984

Ron DeSantis, Governor

Halsey Beshears, Secretary

STATE OF FLORIDA
DEPARTMENT OF BUSINESS AND PROFESSIONAL REGULATION

CONSTRUCTION INDUSTRY LICENSING BOARD

THE GENERAL CONTRACTOR HEREIN IS CERTIFIED UNDER THE
PROVISIONS OF CHAPTER 489, FLORIDA STATUTES

DIAZ, ANDRES GERARDO

RIC-MAN INTERNATIONAL, INC.
1545 NW 27TH AVE
POMPANO BEACH FL 33069

LICENSE NUMBER: CGC1526106

EXPIRATION DATE: AUGUST 31, 2022

Always verify licenses online at MyFloridaLicense.com

Do not alter this document in any form.

This is your license. It is unlawful for anyone other than the licensee to use this document.

RICK SCOTT, GOVERNOR

JONATHAN ZACHEM, SECRETARY

Florida dbpr

STATE OF FLORIDA
DEPARTMENT OF BUSINESS AND PROFESSIONAL REGULATION

CONSTRUCTION INDUSTRY LICENSING BOARD

THE GENERAL CONTRACTOR HEREIN IS CERTIFIED UNDER THE
PROVISIONS OF CHAPTER 489, FLORIDA STATUTES

DIAZ, ANDRES GERARDO

RIC-MAN INTERNATIONAL, INC.
1545 NW 27TH AVE
POMPANO BEACH FL 33069

LICENSE NUMBER: CGC1526106

EXPIRATION DATE: AUGUST 31, 2020

Always verify licenses online at MyFloridaLicense.com

Do not alter this document in any form.

This is your license. It is unlawful for anyone other than the licensee to use this document.

STATE OF FLORIDA
DEPARTMENT OF BUSINESS AND PROFESSIONAL REGULATION

CONSTRUCTION INDUSTRY LICENSING BOARD (850) 487-1395
2601 BLAIR STONE ROAD
TALLAHASSEE FL 32399-0783

Congratulations! With this license you become one of the nearly one million Floridians licensed by the Department of Business and Professional Regulation. Our professionals and businesses range from architects to yacht brokers, from boxers to barbeque restaurants, and they keep Florida's economy strong.

Every day we work to improve the way we do business in order to serve you better. For information about our services, please log onto www.myfloridalicense.com. There you can find more information about our divisions and the regulations that impact you, subscribe to department newsletters and learn more about the Department's initiatives.

Our mission at the Department is: License Efficiently, Regulate Fairly. We constantly strive to serve you better so that you can serve your customers. Thank you for doing business in Florida, and congratulations on your new license!

STATE OF FLORIDA DEPARTMENT OF BUSINESS AND PROFESSIONAL REGULATION

CGC1526106 ISSUED: 06/08/2018
GENERAL CONTRACTOR
DIAZ, ANDRES GERARDO
RIC-MAN INTERNATIONAL, INC.

Signature
LICENSED UNDER CHAPTER 489, FLORIDA STATUTES
EXPIRATION DATE: AUGUST 31, 2020

STATE OF FLORIDA
DEPARTMENT OF BUSINESS AND PROFESSIONAL REGULATION

CONSTRUCTION INDUSTRY LICENSING BOARD
1940 NORTH MONROE STREET
TALLAHASSEE FL 32399-0783

(850) 487-1395

RECEIVED
JUL 10 2014
RIC-MAN INT'L

MELEHAN, FRANCIS P
RIC-MAN INTERNATIONAL INC
2601 WILES ROAD
POMPANO BEACH FL 33073

Congratulations! With this license you become one of the nearly one million Floridians licensed by the Department of Business and Professional Regulation. Our professionals and businesses range from architects to yacht brokers, from boxers to barbeque restaurants, and they keep Florida's economy strong.

Every day we work to improve the way we do business in order to serve you better. For information about our services, please log onto **www.myfloridalicense.com**. There you can find more information about our divisions and the regulations that impact you, subscribe to department newsletters and learn more about the Department's initiatives.

Our mission at the Department is: License Efficiently, Regulate Fairly. We constantly strive to serve you better so that you can serve your customers. Thank you for doing business in Florida, and congratulations on your new license!

STATE OF FLORIDA
DEPARTMENT OF BUSINESS AND PROFESSIONAL REGULATION

CGC1506008 ISSUED: 06/30/2014

CERTIFIED GENERAL CONTRACTOR
MELEHAN, FRANCIS P
RIC-MAN INTERNATIONAL INC

IS CERTIFIED under the provisions of Ch.489 FS.
Expiration date : AUG 31, 2016
L1406300000711

DETACH HERE

RICK SCOTT, GOVERNOR

KEN LAWSON, SECRETARY

STATE OF FLORIDA
DEPARTMENT OF BUSINESS AND PROFESSIONAL REGULATION
CONSTRUCTION INDUSTRY LICENSING BOARD

LICENSE NUMBER
CGC1506008

The GENERAL CONTRACTOR
Named below IS CERTIFIED
Under the provisions of Chapter 489 FS.
Expiration date: AUG 31, 2016

MELEHAN, FRANCIS P
RIC-MAN INTERNATIONAL INC
3065 JUPITER PARK CIRCLE
SUITE 2
JUPITER FL 33458

ISSUED: 06/30/2014 DISPLAY AS REQUIRED BY LAW SEQ # L1406300000711

RECEIVED

MAY 2 9 2020

RMI EMAIL

Ron DeSantis, Governor

Halsey Beshears, Secretary

Florida dbpr

STATE OF FLORIDA
DEPARTMENT OF BUSINESS AND PROFESSIONAL REGULATION

CONSTRUCTION INDUSTRY LICENSING BOARD

THE UNDERGROUND UTILITY & EXCAVATION CONTRACTOR HEREIN IS CERTIFIED UNDER THE PROVISIONS OF CHAPTER 489, FLORIDA STATUTES

BRENNEN, LAURENCE H

RICHVAN INTERNATIONAL INC
114 ACARANDA COURT
ROYAL PALM BEACH FL 33411

LICENSE NUMBER: CUC056824

EXPIRATION DATE: AUGUST 31, 2022

Always verify licenses online at MyFloridaLicense.com

Do not alter this document in any form.

This is your license. It is unlawful for anyone other than the licensee to use this document.

REFERENCES

Town of Surfside Utility Upgrade Project
Randy Stokes - Asst. Director
954-494-7494
Email: rstokes@townofsurfsidefl.gov

Broward County WWWS
Alan Garcia, P.E. - Director
954-831-0973
Email: agarcia@broward.org

Palm Beach Utilities Dept.
Joseph Tanadredi, Project Manager
561-493-6088
Email: jtanacredi@pbcwater.com

City of Plantation
John Michael Perez, Project Manager
954-630-4475
Email: jmptm1@hotmail.com

City of Miami Beach
Sabrina Baglieri, Senior Project Coordinator
305-673-7091
Email: sabrinabaglieri@miamibeachfl.gov

City of Sunrise
Tim Welch, Utilities Director
954-888-6055
Twelch@sunrisefl.gov

City of Coral Gables
Peter Iglesias, Assistant City Manager
305-460-5204

Miami Dade
Nelson Cespedes
786-552-8803

City of Weston
Karl Thompson, Assistant City Manager
954-385-2000
kthompson@westonfl.org

City of Miami Beach
David Martinez, Capital Improvement Director
305-673-7091

Miami Dade Water & Sewer Department
Alexis Valdes
786-299-9008
Email: Alexis.valdes@miamidade.gov

Ric-Man International, Inc.

Current Work

OWNER	ENGINEER	CONTRACT	DESCRIPTION	AMOUNT	COM-PLETED
CITY OF HOLLWOOD		30" RAW WATER MAIN REPAIR	replacement of 30 inch cast iron raw water main to 24 inch ductile iron raw water main.	$257,800.00	12%
MIAMI DADE WATER & SEWER	EAC	60" FM (NL-1A) (WEST SEGMENT) ALONG NW 162ND STREET FROM NW 6TH AVE TO NE 8TH AVE	installation of approximately 10,000 linear feet of 60- inch PCCP	$19,314,785.95	0%
MIAMI DADE WATER & SEWER	WSP	60-INCH FORCE MAIN BETWEEN NE 151 STREET & BISCAYNE BOULEVARD AND NE 163 STREET & NE 8 AVENUE	installation of a 60-inch Prestressed Concrete Cylinder Pipe (PCCP) Force Main in the City of North Miami Beach that connects to an existing 72-inch Water and Sewer Department's force main	$28,527,995.95	25%
MIAMI DADE WATER & SEWER	TY LIN	Roadway Improvements to NW 107th Avenue from NW 138th Street to NW 166th Street	design and construction services for 1.8 mile roadway construction of a roadway that consists of a five (5) lane undivided roadway facility	$23,325,914.55	12%
MIAMI DADE WATER & SEWER	300 ENGINEERING	DB for Installation of a 36" sanitary sewer FM along NW107th Ave from NW 7-25th st	Design Build of New 36" Force main	$8,954,735.95	45%
BROWARD COUNTY	THOMPSON & ASSOCIATES	Reclaimed Water Transmission Main BP 1	New 42" reclaimed water main installed	$23,472,575.95	95%

Equipment	Description	Serial #	Make	Model	Year
AIR COMPRESSORS					
MAIRC4	AIR COMPRESSOR	PE4045D251552	JD SULLAIR	185HDPQ	2003
AC247518	AIR COMPRESSOR	4729902948	INGERSOLL RAND	2475 14HP KOHLE	2018
AGX16020	AIR COMPRESSOR	GCBPT-4180972	NORTH STAR	GX160UT2	2020
AIRSUL20	AIR COMPRESSOR	202005010004	SULLAIR	185DPQ-KUT4F	2020
ASPHALT PAVERS/ZIPPERS					
MREMX2	REMAX 4800 ASPHALT RECL	305652	REMAX	4800	
MZIPE3	ASPHALT ZIPPER	109FS08256U023657	ASPHALT ZIPPER	AZ500 48HD	2006
MZIPER	ASPHALT ZIPPER	109FS10161U021823	John Deere	AZ480T	2001
MCPC206	24" CAT MINI ZIPPR COLD	DDG00868	CAT	PC206	2009
P1550DM1	ASPHALT PAVER - MAULDIN	012N-50TKZ9Y92-03	MAULDIN	1550_D	2014
EXCAVATORS/BACKHOES					
B17ZTS	EXCAVATOR	FF017ZX210096	JOHN DEERE	17ZTS	2001
B345BA	EXCAVATOR	AGS01768	CATERPILLAR	345BL II	2003
B374C21	EXCAVATOR	JGP00135	CATERPILLAR	NEXT GEN 374	2021
B490K20	EXCAVATOR	A42458	KOMATSU	PC490LC-11	2020
BC32519	EXCAVATOR W/CAB AIR	NDJ20737	CATERPILLAR	325FLCR	2019
BJD5011	EXCAVATOR	1FF050DXABG275986	JOHN DEERE	50DXFF	2011
BJD6011	EXCAVATOR	1FF060DXCA0280566	JOHN DEERE	60D	2011
BK13818	EXCAVATOR W/CAB AIR	53339	KOMATSU	PC138USLC-11	2018
BK22812	EXCAVATOR	50846	KOMATSU	PC228USLC-8	2012
BK88MR19	EXCAVATOR	8760	KOMATSU	PC88MR-10	2019
E321DC14	EXCAVATOR W/CAB AIR	MPG00913	CATERPILLAR	321DLCR	2014
E328DC14	EXCAVATOR W/CAB AIR	RMX00786	CATERPILLAR	328D LCR	2014
BROOM TRACTORS					
SFORD	BROOM TRACTOR	C109837	FORD	3600	
BRJD94	BROOM TRACTOR	144245	JOHN DEERE	5300	1994
SMF230	BROOM TRACTOR	9A309171	MASSEY FERGUSON	MF230	
SMF451	BROOM TRACTOR	BM13037	MASSEY FERGUSON	MF451-2	
SM30018	LAYMOOR SWEEPMASTER 300	39406	LAYMOOR	SM300	2018
SJD45200	BROOM TRACTOR	H440262	JOHN DEERE	4520	2007
BUCKETS					
MCLAM2	6FT CABLE CLAMP BUCKET		OWENS		
BU72C15	72 GENERAL PURP BUCKET	EQ9087	CAT	BKTSSL72	
BU36JD14	JD36" Bucket		JOHN DEERE		2014
BU42JD14	JD42" 350G Bucket	AT33920S	John Deere	42" Bucket	14
BUCKET20	CAT321/5 72" BUCKET B-L	XDCB-837-72-125-0	PEMBERTON	BKT320F	2020
BUCKET21	PC400 36" BUCKET	RH132857	ESCO	BKT-36-PC400XDT	2021
CEMENT MIXERS					
MCEM7	CONCRETE MIXER	SAH752299	CM994H8	STOW 9	2008
COMBINATION BACKHOE/LOADERS					
JD410L18	2018 JD LOADER BACKHOE	1T0410LXJJF328962	JOHN DEERE	410L	2018
CONEX/STORAGE					
MCONX1	8' x 12' CONEX	RSSU600005	CONEX	10I 222696	2007
CONX820	CONNEX STOR CONTAINER 8				
CON2017A	CONEX CONTAINER 20X10	8345927	STEEL CONTAINER	BX2	2017
CON2017B	CONEX CONTAINER 20X10	8297789	STEEL CONTAINER	BX2	2017
CON2020A	CONEX CONTAINER 20X10	CRSU1034320	STEEL CONTAINER		2020
CON2020B	CONEX CONTAINER 20X10	CRSU1384000	STEEL CONTAINER		2020
CONX1020	CONEX CONTAINER 20X10	3067806	CONEX	10 X 20	2017
SAWS					
14SAW20	14" CUTQUIK SAW	188561251	STIHL	TS 420	2020
14SAW21	14" CUTQUIK SAW	189674317	STIHL	TS420	2021
14SAW22	14" CUTQUIK SAW	191016034	STIHL	TS420	2022
18RYO21	18" GAS CHAIN SAW	LT21142D131435	RYOBI	RY3818	2021

Equipment	Description	Serial #	Make	Model	Year
14SAW21B	14" CUTQUIK SAW	189670399	STIHL	TS 420	2021
14SAW21C	14" CUTQUIK SAW	189585284	STIHL	TS420	2021
M14STS15	14 STIHL SAW - LUPE	178641397	STIHL	TS420	
M14STS16	14 STIHL SAW	178641385	STIHL	TS420	
M14STS17	14 STIHL SAW	178641415	STIHL	TS420	
M14STS18	TS 420 STREET SAW	180813947	STIHL	TS420 CUTQUICK	2018
M14STSA2	14" STREET SAW	17130141	STIHL	TS420	2010
M14STSA3	14" STREET SAW	173827564	STIHL	TS420	2011
M14STSA4	14" STREET SAW	175200713	STIHL	TS420	2012
M14STSAW	14" STREET SAW	15470	EDCO	D51611H	
M16RYO19	16" CHAIN SAW	EU19353D020049	RYOBI	RY3716	2019
M20STS18	20" CHAIN SAW		STIHL	MS271-20	2018
M24COSAW	24" CONCRETE SAW ALUMIN				
M26STSAW	26" STREET SAW	BA0303801	MULTIQUIP		2005
MICSAW14	14" GAS SAW		ICS	633GC	
MICSAWCH	CHAINSAW DIAMOND	12956	ICS	880F4	2013
SICSCON1	ICS 680 CONCRETE SAW	97723949770	ICS	680	2015
DOZERS					
DK39PX20	DOZER	A96644	KOMATSU	D39PX-24	2020
EXCAVATOR ACCESSORIES					
B160A1	BREAKER		JOHN DEERE		
B50A18	70T HYDRAULIC BREAKER	BES 102624	EPIROC	EC 70T	2018
B50DX1B	50D CLEANOUT DITCHING B		JOHN DEERE	ASI 4' BUCKET	2006
FORKLIFTS					
FKLFT16	FORKLIFT	S40400251	KALMAR	DCG16012	2016
MFORKLFT	FORKLIFT				
GENERATORS/LIGHTING					
LTWR1	LIGHT TOWER	5XFLV0417KM005950	WACKER	LTV6K	2019
LTWR2	LIGHT TOWER	5XFLV0411KM005944	WACKER	LTV6K	2019
GEN20A	GENERATOR 6500W	DN19264D01365	RYOBI	RY906500S	2020
MGN25A	GENERATOR	8100396	MULTIQUI	DCA25USI	2006
MLITE2	LIGHT TOWER, TOWABLE SM	5AJLS16115B001814	MAGNUM	MLT3060	2005
MHONGEN	GENERATOR	EZEJ1036535	HONDA	EZ2500	
GGEN0934	GENERAC GENERATOR	7981814	GENERAC	OG0934	
GH280517	2017 HONDA 3000W GENERA	475EB3000CK2	HONDA	3000W INDUSTRIA	2017
GH353918	2017 HONDA GENERATOR 3.	EZGP-1543539	HONDA	EB3000	2017
GRADERS					
GRG80N03	NEWHOLLAND RG80 GRADER	85S06109	NEWHOLLAND	RG80	2003
LASERS					
L08B	LAZER - ROTATING	23284	SPECTRA TRIMBLE	LL200	
LS06A	LASER	12324	SPECTRA	DG711	2006
LSDG1	LASER	6651	DIAL A GRADE		
LSDG2	LASER	L1165	DIAL A GRADE		
LSTC1	LASER	TP-L3B	TOPCON		
LSPECB	LASER	17894	SPECTRA	DG711	
LSPECC	LASER	25743	SPECTRA	DG711	2014
LOADERS					
L922B	LOADER	94A1982	CATERPILLAR	922B	1966
L938G6	LOADER - WHEEL	RTB00876	CATERPILLAR	938G II	2004
L320K21	2021 KOMATSU WHEEL LOAD	A39973	KOMATSU	WA320-8	2021
LK20012	LOADER - WHEEL	71487	KOMATSU	WA200PZ-6	2012
LK32019	LOADER - WHEEL	A38828	KOMATSU	WA320-8	2019
LC262C09	LOADER - SKID STEER	MST02929	CATERPILLAR	262C	2009
LC262D19	LOADER - SKID STEER	DTB10309	CATERPILLAR	262D	2019
LD624JDA	LOADER - WHEEL	1DW624KZTDE654730	JOHN DEERE	624K	2013

Equipment	Description	Serial #	Make	Model	Year
LD624JDB	LOADER - WHEEL	1DW624KZKDE656125	JOHN DEERE	624K	2013
LK32019B	LOADER - WHEEL	A39203	KOMATSU	WA320-8	2019
MAINT OF TRAFFIC					
MCONES	100 TRAFFIC CONES				2013
BARRWANA	WATER BARRIER WALL NATU	148003B	YODOCK	2001MB NATUAL	2016
BARRWAOR	WATER BARRIER WALL ORAN	148002B	YODOCK	2001MB ORANGE	2016
MHSQ2191	TRAFFIC SIGNALIZATION		HORIZON SIGNAL	SQ2	2019
MISCELLANEOUS TOOLS EQUIP					
MISC	MISC SMALL TOOLS				
TOOLS	SMALL TOOLS SHOP				
MDRONE	DRONE	CG010913335328			2015
MF938G	UTILITY FORK & MANUAL C				
MFUEL2	500 gallon FUEL TANK				
MJACK1	JACK HAMMER 90LB	000166351	SULLIVAN	SLVSPB90	2011
MTANK1	info from Jerry L		Sitation Tank	Small	
TANK19	SEDIMENT TANK 5000 GAL	FMS0519013	SEDIMENT TANK	5KWEIR	2019
TANK98	SEDIMENT TANK	SFVP4074L	FRONTIER	FAVTLW	1998
VENT20	RIPCORD VENTILATOR BLOW		CFM	6200	2020
LAWNMWR	LAW MOWER 42"	BM242KT7250322006	BAD BOY	42" MZ	2022
MGASMC1	GAS DETECTOR - MULTI GA	BWTMCXLXWHMYNA	GAS ALERT	MICRO CLIP XL	2015
BVT13696	BLOWER HONDA ALLEGRO	13696	honda		
DRILHD14	DRILL HEAD W/BOOM		DMS		2013
IMPACT01	IMPACT GUN 1/2"	H96AF203009598	MILWAUKEE	M18 FUEL	2020
LINELZ17	2017 LINELAZER 3700 1 G	BA1824 SERIES J17	GRACO	SPRAY GUN	2017
LOCATE17	2017 HELIFLUX MAGNETIC	QVT-2006040809362	HELIFLUX &CASE	GA-52CX	2017
PLATE COMPACTORS/TAMPERS					
LM31B	MUELLER D-5 TAPPING MAC		MUELLER D-5	5808M2	
MMULT1	MULTI QUIP REV PLATE CO	J1954	MULTI QUIP	MVH402DBS	2002
MMULT3	COMPACTOR	1074	MULTI QUIP	MVH406	2006
MMULT4	COMPACTOR	P1140	MULTI QUIP	HATZ	
MMULT5	COMPACTOR	P1155	MULTIQUIP	HATZ	
MMULT6	COMPACTOR	R-17111	MULTIQUIP	MVH406DSZ	2008
MMULT7	COMPACTOR	R-17113	MULTIQUIP	MVH406DSZ	2008
MMULT8	COMPACTOR	T2424	MULTIQUIP GAS R	MVH40GDH	2010
MWACK2	WACKER JUMPING JACK	5375951	WACKER	BS 700	
PCBO12	PLATE COMPACTOR	101692163758	BOMAG	55/65	2012
PCBO13	PLATE COMPACTOR	101692164055	BOMAG	55/65	2013
PCMM14	PLATE COMPACTOR	T3407	MIKASA	MVC82VH	2014
PCBO12A	PLATE COMPACTOR	101692163779	BOMAG	55/65	2012
PCWACK1	PLATE COMPACTOR	1348126	WACKER	DPU5045H	2002
PCWACK2	PLATE COMPACTOR	1289716	WACKER	DPU4045H	2003
PCWACK3	PLATE COMPACTOR	778547758	WACKER	BPU3345	
PCWACK4	PLATE COMPACTOR	6582887	WACKER	WP1550 AW	
PCWACK5	PLATE COMPACTOR	29012660	DYNAPAC	LE90	
PCWACK6	PLATE COMPACTOR	1180638	WACKER	DUP5045A	
PCWACK8	PLATE COMPACTOR	10935964	WACKER	BS60-4AS	2018
PCWACK9	PLATE COMPACTOR	11062516	WACKER	BS50-4As	2019
MTAPMU18	2018 MUELLER DRILL MACH	580610	MUELLER	D-5 DRILL OPER	2018
MTAPMULR	TAPPING MACHINE	BQ81314	MUELLER	D5	2013
PCWACK19	PLATE COMPACTOR	11044627	WACKER	DPU5545H	2019
STEEL PLATES					
MPLATE8	08X08 STEEL PLATES (8)		8 PLATES		
MPLATE10	8x10 STEEL PLATES(9)		9 PLATES		
MPLATE14	8x14 STEEL PLATES (6)		6 PLATES		
MPLATE16	8x16 STEEL PLATES(12)		12 PLATES		
MPLATE18	8x18 PLATES (2)		2 PLATES		
MPLATE20	8x20 STEEL PLATES(21)		22 PLATES		

Equipment	Description	Serial #	Make	Model	Year
PUMPS WELLPNT & WELLPNT ACCES					
PHD6H	6" PUMP HEAD	H-6-TMSA-136	HOLLAND	H-6-TMSA-136	1999
PHD6S	6" PUMP HEAD	14849	SLOAN	TP6	2020
PHYD6	6" HYDRAULIC PUMP	UNIT 1PT6-23			
PHYDS	6" HYDRAULIC PUMP	1313C	SLOAN	6"	
PJETA	6" JET PUMP	G300396	BERKELEY	JET PUMP	
P3TR19	3" TRASH PUMP	3TH-39303	HONDA	8HP-396GPM	2019
P6JP08	6x3 VAC ASSIST PUMP DIE	9178 (NP2D637020)	PIONEER	PP63C17TCD914	2008
PTRDU6	6" HYDRAULIC TRASH PUMP	4880	DURAFLO	HTC006	2013
PTRMA3	3" GAS TRASH PUMP	173301	MAGNUM	MTP300	2008
PTRMQ3	3" GAS TRASH PUMP	3TH11360	MULTIQUIP	QP3TH	2007
PTRMQ4	4" GAS TRASH PUMP	4TH1435	MULTIQUIP	QP4TH	2007
PTRWK3	3" TRASH PUMP	5170444	WACKER		
PUMP20	3" TRASH PUMP	24518528	WACKER	PT 3A	2020
MGTEST2	GAS TEST PUMP		HURCO		
P3TR12A	3" TRASH PUMP	20122910	WACKER		2012
P3TR13A	3" TRASH PUMP	20204717	WACKER		2013
P3TR13B	3" TRASH PUMP	20207755	WACKER		2013
PDAERO6	6 DIAPHRAGM PUMP	666100362C	ARO	DIAPHRAGM	16
PDHOND3	3" DIAPHRAGM PUMP	5643505	HONDA	DIAPHRAGM	2006
PTHONDA	TEST PUMP	70388	HONDA		2008
PTR8TPA	8" 32 HPU HYD TRASH PUM	32HPU-650 80	THOMPSON	32HPU HYD	2016
PTRH03A	3' TRASH PUMP	WPT3A	HONDA	7.9HP	2016
PTRMQ3A	3" GAS TRASH PUMP	3PH 24557	MULTI-QUIP	QP3TH	2014
PTRMQ3B	3" GAS TRASH PUMP	3PH 24553	MULTI QUIP	QP3TH	2014
PTRWK3A	3" TRASH PUMP	20173189	WACKER		2013
PTRWK3B	3" TRASH PUMP	20207755			2014
PTRWK3C	3" TRASH PUMP	20215743	WACKER		2014
PTRWK3D	3" TRASH PUMP	20215744	WACKER		2014
WELLPTS	SELF JETTING WELLPOINTS		11/2" x 3'		2013
6TPUMP21	2021 6" TRASH PUMP	14577	PRIMERITE	CT006D	2021
P10WP13A	10" WELLPOINT PUMP	12421	M&W	RWP10	2013
P10WP13B	10" WELLPOINT PUMP	12422	M&W	RWP10	2013
P550RI15	PUMP - HYDROSTATIC TEST	035538	RICEHYDRO	DPH-3B	2015
PHYDKOM1	HYDRAULIC PUMP - KOMATS		KOMATSU	703-8T-00120	2012
PTESTR18	2018 RICE HYDRO TRIPLE		RICE	HYDRO KAPPA 43	2018
PTR3MQ17	3" TRASH PUMP	3TH-34017	MULTIQUIP	QP3TH	
WELLPTS1	WELLPOINT SCREEN/SWING				2014
PRESSURE WASHERS					
MPRESS	PRESSURE WASHER		HYDROTEK	SW30004	1993
MPRESS2	STEAM CLEANER	PE05178			2005
ROLLERS					
RB124C	ROLLER	901581371293	BOMAG	BW124DH	2007
RC122B	ROLLER	60118635	DYNAPAC	CC122	2005
RD2200	ROLLER	10000423TKA024488	DYNAPAC	CC2200	2019
RB12010	ROLLER	861880181288	BOMAG	BW120AD4	2010
RB12012	ROLLER	861880181644	BOMAG	BW120	2012
RB12414	ROLLER	901581391119	BOMAG	BW124DH	2014
RJCBVM75	ROLLER	1801043	JCB	VM75D	2007
SHOP EQUIP					
FP21ZZ17	2017 DIESEL FUEL FILTRA	21ZZ	PARKER	FC-16-25	2017
AUTOMOBILES					
ALINC12	2012 LINCOLN	2LMDJ8JK3CBL00700	LINCOLN	MKX	2012
AMERC11	2011 MERCEDES SUV	4JGBF7BE5BA628685	MERCEDES	GL450	2011
ATAHC19	2019 CHEVROLET TAHOE (B	1GNSCBKC3KR116821	CHEVROLET	TAHOE	2019
ATAHC21	2021 CHEVROLET TAHOE	1GNSKTKL3MR442257	CHEVROLET	TAHOE	2021
ATRVC21	2021 CHEVY TRAVERSE	1GNERHKW7MJ252945	CHEVROLET	TRAVERSE	2021
AYUKG20	2020 GMC YUKON	1GKS2CKJ1LR228961	GMC	YUKON	2020
ABMWX519	2019 BMW X5	5UXJU2C58KLN64667	BMW	X5 x DRIVE 50i	2019

Equipment	Description	Serial #	Make	Model	Year
ACAES15A	2015 CADILLAC ESCALADE	1GYS4NKJ8FR535690	CADILLAC	ESCALADE	2015
AMER6319	2019 MERCEDES-BENZ GT63	WDD7X8JB3KA001963	MERCEDES-BENZ	GT63C4 AMG	2019
ARANRV14	2014 RANGE ROVER	SALGS2VF3EA133346	LAND ROVER	RANGE ROVER	2014
ARANRV16	2016 RANGE ROVER	SALGS2KF3GA252795	LAND ROVER	RANGE ROVER	2016
ATRVC21B	2021 CHEVY TRAVERSE	1GNERGKW5MJ266949	CHEVY	TRAVERSE	2021
TEST BALLS					
TEST04	TEST BALL 15-32	200102D104	CHERNE INDUSTRY	310328 15 X 32"	2020
TEST05	TEST BALL 15-32	200130D101	CHERNE INDUSTRY	310328 15 X 32"	2020
TEST21	TEST BALL 60" PILLOW ST	21H24AJG	TRENCH PLATE CO	60" PILLOW-STYL	2021
TEST21B	TEST BALL 60" PILLOW-ST	22D28AJG	TRENCH PLATE CO	60" PILLOW STYL	2021
MTB2448A	TEST BALL 24-48 I SERIE	PL11348	TRENCH PLATE CO	310488	2016
MTB2460A	TEST BALL 24-60	MIA52715-18		24" - 60"	2015
MTB2460B	TEST BALL 24-60	MIA52715-19		24" - 60"	2015
TRENCH/ROCK BOXES					
TS811	TRENCH SHIELD 8 X 11				
TS813	TRENCH SHIELD 8 X 13				
M8YDRB	7.5 YARD ROCK BOX	149420	STONE MIZER	HVY DUTY 7.5	2014
M9YDRB	9 YARD ROCK BOX			SM-9	
RB12YD	12 YD ROCK BOX	162662	STONE MIZER	EW	
TB424A	TRENCH BOX 4 X 24 A	12522	PRO-TEC	PRO6-424D	1999
TB424B	TRENCH BOX 4 X 24 B	12523	PRO-TEC	PRO6-424D	1999
TB6224	TRENCH BOX 6X2X24	14930	PRO-TEC	PRO6-224D	
TB6624	TRENCH SHIELD 6 x 6 x 2	149558			2014
TB6820	TRENCH SHIELD 6 x 8 x 2	149723		6" d wall 8x20'	2014
TB8624	TRENCH BOX 8 X 6 X 24	104128	HT5 824	824 HT F	
TB8824	TRENCH BOX 8 X 8 X 24	104128	HT6 824	8D824WBH	
M7YDRBA	7 YD ROCK BOX				
M7YDRBB	7 YD ROCK BOX				
SHRNG21	HYDRAULIC SHORING/56" E				2021
TB10X24	TRENCH BOX 10 X 24	C220261	TRENCH PLATE	10 X 4	2022
TB824TP	TRENCH BOX 8 X 24	TB154000	TRENCH PLATE	HT6-824	2016
M30SKBOX	30 CY SILK BOX ROLL OFF	NONE	WASTE EQUIP	30YD	2015
ROCK12YD	12 YARD ROCK BOX	162662	STONE MIZER	EW	
TB12SPRD	12' STEEL PIPE SPREADER				2014
TB16NTBX	HOFMAN 4X7X1/4X15.6 NIG		HOFMAN	NIGHTBOX	2016
DUMP TRUCKS					
TDI92B	DUMP TRUCK	1HSHBLHN1NH439948	INTERNATIONAL	8100	1992
TDM07A	TRI-AXLE DUMP TRUCK	1M2AT04C47M004535	MACK	CTP713	2007
TMG64B19	2019 MACK DUMP TRUCK	1M2GR2GC6KM007543	MACK	GR64B	2019
TRAILERS					
MTACKA	INGERSOLL RAND HT-250T	5E1FS10185S818380	INGERSOLL RAND	HT-250T	2005
MTACKB	LEEBOY TACK TANK	L250T-558	LEEBOY	250T	1996
T16TON	1997 ECONOLINE TRAILER	42ETPJF44V1004991	ECONOLINE	SP624TE TRAILER	1997
TLKING	1998 KING LOWBOY TRAILE	1TKJ04937WB100966	KING	TK100HDG	1998
TTCONT	CONTRAIL TRAILER	4KNUC16286L161301	CONTRAIL	C-12BL	2006
TTCURA	2004 CURAHEE UTILITY TR	4TELS162941071133	CURAHEE	TRAILER	2004
THM4SAW	STREET SAW TRAILER	NOVIN0200269610	HOMEMADE		2002
OFTMOD18	MODSPACE 12x56 OFFICE T	DSI-14271	MODSPACE	CGSNGL1260	2018
TCROWN20	TRIPLE CROWN TRAILER	1XNBU1624L1102340	TRIPLE CROWN		2020
TICONT18	2018 CONTINENTAL CARGO	5NHUNS22XJU117590	CONTINENTAL	6X12TA2	2018
TRL19EGR	EAGER BEAVER 25 TON TRA	112HAX383KL083485	EAGER BEAVER	25XPT	2019
PICKUPS					
TRK19A	2019 CHEVY SILVERADO 25	2GB2CREG3K1177549	CHEVROLET	2500 HD 4DR EXT	2019
TRK20A	2020 CHEVY SILVERADO 25	1GB2WLE70LF237222	CHEVROLET	2500 HD 4DR EXT	2020
TRK20B	2020 CHEVY SILVERADO 25	1GB2WLE72LF237402	CHEVROLET	2500 HD 4DR EXT	2020
PUF13CHR	2013 FORD F150	1FTFX1CF1DFD08776	FORD	F150	2013
PUF13LUI	2013 FORD F150	1FTFW1CF9DFD08768	FORD	F150	2013

Equipment	Description	Serial #	Make	Model	Year
T1500G22	GMC SIERRA 1500 LTD DEN	1GTU9FEL7NE232952	GMC	SIERRA	2022
T2500C16	2016 CHEV 2500 SILVERAD	1GC0CUEG3GZ161808	CHEVROLET	SILVERADO 2500	2016
T2500C17	2017 CHEVY SIVERADO 250	1GC2CUEG5HZ378349	CHEVY	SIVERADO 2500HD	2017
T2500C18	2018 CHEVROLET SILVERAD	1GC1CUEG5JF235792	CHEVROLET	SILVERADO 2500	2018
T2500C19	2019 CHEVROLET SILVERAD	1GC1KTEY1KF127404	CHEVROLET	SILVERADO 2500H	2019
T250C14A	2014 CHEVY 2500HD UTILI	1GC0CVCG8EF182743	CHEVROLET	SILVERADO 2500	2014
T250C14B	2014 CHEVY SILVERADO 25	1GC0CVCG1EF113599	CHEVY	2500 SILVERADO	2014
T250C16A	2016 CHEVY SILVERADO 25	1GC2CUEG4GZ354350	CHEVY	SILVERADO 2500	2016
T250C18B	2018 CHEVROLET SILVERAD	1GB2CUEG7JZ348439	CHEVROLET	SILVERADO 2500H	2018
T250C19A	2019 CHEVY SILVERADO 25	2GC2KSEGXK1157739	CHEVROLET	SILVERADO 2500	2019
T250C19B	2019 CHEVROLET SILVERAD	2GC2CREG9K1142459	CHEVROLET	SILVERADO	2019
TF550F16	2016 FORD F550 SUPER DU	1FDUF5HT7GEB19796	FORD	F550	2016
TPF9350A	2009 FORD F350 UTILITY	1FDSF34Y19EA04546	FORD	F350	2009
TPF9350B	2009 FORD F350 UTILITY	1FDSF34Y99EA05637	FORD	F350	2009
TPGMC15A	2015 GMC SIERRA P/U	3GTP1VEC9FG480765	GMC	SIERRA	2015
TRUCKS/TRACTORS					
TFC19	2019 CHEVROLET 4500HD	JALCDW167K7010153	CHEVROLET	4500HD	2019
TMM01A	MACK TRACTOR (LOW BOY)	1M2P324C31M056350	MACK	RD688S	2001
TJETV07	2007 Vactor 2100 Classc	1HTWGAZT37J399504	INTERNATIONAL	VACTOR 2100	2007
TPF33715	2015 PETERBILT FUEL SER	2NP2HJ7X1FM273902	PETERBILT	337	2015
WTRK06FO	2006 WATER TRUCK	3FRNF65C36V384112	FORD	F650	2006
TRENCHERS					
MD5700	TRENCHER	3R1253	Ditchwitch	5700	2007
TVE75517	2017 VERMEER T755III TR	1VR2180R1J1000572	VERMEER	T755III	2018
WELDERS					
WLINC	WELDER	1050090	LINCOLN	ARCH WELDER	
WM25219	WELDER & GUN	MK470087N/MK45017	MILLERMATIC	252 ALUM PK	

CONSENT RESOLUTION OF THE

BOARD OF DIRECTORS OF

RIC-MAN INTERNATIONAL INC.

"WHEREAS, the Florida Business Corporation Act, as amended provides that if all of the directors of a corporation consent in writing to any action to be taken by the corporation, such action shall be as valid a corporate action as though it has been authorized at a meeting of the directors; and

WHEREAS, the undersigned are all of the directors of Ric-Man International Inc., A Florida Corporation (the "Corporation"), and desire to take the actions expressed in the resolutions set forth below.

NOW, THEREFORE, The Board of directors (the "Board") of the Corporation takes the actions expressed in the following resolutions as of December 31, 2019:

ELECTION OF OFFICERS

RESOLVED, that the following persons are elected as the sole officers of the Corporation, to hold the offices set forth opposite their respective names below, until their respective successors have been duly elected and have qualified, or as otherwise provided by the Bylaws of the Corporation:

Michael R. Jankowski	President
Paul R. Jankowski	Vice-President
Andres G. Diaz	Secretary
Paul C. Jankowski, Jr.	Vice-President
Lisa M. Jankowski	Secretary and Treasurer

COUNTERPARTS; COPIES

RESOLVED, that this Consent Resolution may be executed in the counterparts, each of which shall be deemed to be an original and all of which together shall constitute one instrument.

RESOLVED, FURTHER, that copies (facsimile, photostatic or otherwise) of signatures to this consent Resolution shall be deemed to be originals and may be relied on to the same extent as the originals.

IN WITNESS WHEREOF, the undersigned have executed this Consent Resolution of the Board of Directors of Ric-Man International Inc. as of December 31, 2019.

LISA M. JANKOWSKI

SECTION 00700

GENERAL CONDITIONS

Index to Articles

		Page
Article 1	Definitions	5-7
Article 2	Organizational Abbreviations	8-9
Article 3	Miscellaneous Preliminary Matters	
3.1	Contract Document Discrepancies	10
3.2	Submissions	10
3.3	Pre-Construction Conference	10
3.4	Contract Time	10
3.5	Computation of Time	10
3.6	Commencement of Work	10
3.7	Extension of Contract Time	10
3.8	Notice and Service Thereof	11
3.9	Separate Contract	11
3.10	Assignments of Contract	11
3.11	Patents	11
3.12	Federal Excise Tax	11
3.13	Savings Due to Excise Tax Exemptions	12
3.14	Overtime Work	12
3.15	Inspections and Testing During Overtime	12
3.16	Nights, Sunday or Holiday Work	13
3.17	Injury or Damage Claims	13
Article 4	Contract Documents	
4.1	Intent	14
4.2	Order of Precedence of Contract Documents	14
4.3	Reference to Standards	14
Article 5	Bonds and Insurance	
5.1	Bid Guarantee	15
5.2	Performance and Payment Bond	15
5.3	Signatures	15
5.4	Insurance Coverage	15
5.5	Certificates of Insurance	16
5.6	Insurance Limits of Liability	16

		Page
Article 6	Availability of Land; Reference Points	
6.1	Rights-Of-Way	17
6.2	Permits	17
6.3	Lines and Grades	17
Article 7	Contractor's Responsibilities	
7.1	Laws/Regulations to Be Observed	18
7.2	Indemnification of City	18
7.3	Guarantee of Payments	18
7.4	Permits and Licenses	18
7.5	Emergencies	18
7.6	Substitutes or "Or Equal"	19
7.7	Shop Drawings	20-21
7.8	Personnel	21-22
7.9	Safety and Protection	22-23
7.10	Traffic Control, Public Safety and Convenience	23-24
7.11	Use of Explosives	24
7.12	Loading of Structures	24
7.13	Concerning Subcontractors	24
7.14	Materials and Equipment	23-25
7.15	Temporary Utilities	25-26
7.16	Review of Records	25-26
7.17	Use of Premises	26-27
7.18	Contractor's Daily Reports	27
7.19	Record Documents	27
7.20	Cleanliness of the Site	27
7.21	Dust Control	27
7.22	Continuing the Work	27
7.23	Indemnification	27-28
Article 8	City's Responsibility	
8.1	Communications	29
8.2	Furnish Contract Documents	29
8.3	Furnish Right-of-Way	29
8.4	Timely Delivery of Materials	29
Article 9	Engineer's Status	
9.1	Authority of the Engineer	30
9.2	Access to the Work	30
9.3	Limitations on the Engineer's Responsibilities	30-31
9.4	Inspectors	31-32
9.5	Inspections	32

		Page
Article 10	Changes in the Work/Contract Price	
10.1	Changes in Work and Terms	33
10.2	Clarifications	33
10.3	Change Orders	33-34
10.4	Value of Change Order Work	34-37
10.5	Notification and Claim for Change of Contract Price	37-38
10.6	Notice of Change	38
10.7	Records	38
10.8	Cancelled Items and Payments Therefore	38
10.9	Full Payment	38
Article 11	Changes in the Contract Time	
11.1	Change Order	39
11.2	Notice	39
11.3	Basis for Extension	39
11.4	Change of Time due to Contract Execution Problems	39
11.5	Change of Time due to Change Order Evaluation	39
11.6	Change of Time and Inspection and Testing	40
11.7	Change of Time and Defective Work	40
11.8	Liquidated Damages	40
Article 12	Warranty and Guarantee; Test and Inspections; Correction, Removal or Acceptance of Defective Work	
12.1	Warranty and Guarantee	41
12.2	Tests and Inspections	41
12.3	Uncovering Work	41-42
12.4	City May Stop the Work	42
12.5	Correction or Removal of Defective Work	42
12.6	One Year Correction Period	42
12.7	Acceptance of Defective Work	42
12.8	City May Correct Defective Work	43
Article 13	Payments to the Contractor	
13.1	Basis of Payment	44
13.2	Unit Price Inclusion	44
13.3	Schedule of Values	44
13.4	Changed Conditions	44
13.5	Application for Progress Payment	44
13.6	Payment for Materials	45
13.7	Affidavit Required	45
13.8	Retainage	45
13.9	Contractor's Warranty of Title	45
13.10	Review of Application for Payment	45-46
13.11	Payment to the Contractor	46

		Page
Article 14	Substantial Completion, Partial Utilization, Final Clean Up, Inspection, Payment and Acceptance	
14.1	Substantial Completion	47
14.2	Partial Utilization	47-48
14.3	Final Clean-Up	48
14.4	Final Inspection	48
14.5	Final Application for Payment	48-49
14.6	Final Payment and Acceptance	49
14.7	Payment of Retainage without Final Completion	49
14.8	Contractor's Continuing Obligation	49
14.9	Waiver of Claims	50
Article 15	Suspension of Work and Termination	
15.1	City May Suspend Work	51
15.2	City May Terminate	51-52
15.3	Contractor May Stop Work or Terminate	52

SECTION 00 70 00

GENERAL CONDITIONS

CITY OF HOLLYWOOD, FLORIDA
GENERAL CONDITIONS
FOR CONSTRUCTION CONTRACTS

ARTICLE 1 - DEFINITIONS

In the interpretation of these Contract Documents the following terms shall have the meaning indicated:

ADDENDA - Written or graphic instruments issued prior to the opening of Bids which clarify, correct or change the Contract Documents.

CHANGE ORDER - A written order to CONTRACTOR executed in accordance with City procurement procedures, as amended authorizing an addition, deletion or revision in the work, or an adjustment in the Contract Price or the Contract Time, issued after the date of Award.

CITY (OWNER) - The City of Hollywood, Florida.

COMMERCIALLY USEFUL FUNCTION - shall exist when the Local MBE/SBE is responsible for execution of the work for the contract and is carrying out the responsibilities by actually performing, managing and supervising the work involved. The Local MBE/SBE must also be responsible, with respect to materials and supplies used on the contract, for negotiating price, determining quality and quantity, and ordering the material, and installing. A commercially useful function is not performed if the role of the qualified Local MBE/SBE is that of an extra participant in a transaction, contract, or project through which funds are passed in order to obtain the appearance of qualified local MBE or qualified local SBE participation.

COMMISSION - The City Commission of the City of Hollywood, Florida, being the legislative body of the CITY as set forth in the City of Hollywood Charter.

CONTRACT - The written agreement between the CITY and the CONTRACTOR covering the work to be performed in accordance with the other Contract Documents which are attached to the Contract and made a part thereof.

CONTRACTOR - The person, firm, or corporation with whom the CITY has entered into the Contract.

CONTRACT DOCUMENTS - The Notice to Bidders, Instruction to Bidders, Proposal, Information Required of Bidders, all Bonds, Agreement, and all supporting documents, these General Requirements and Covenants, the Specifications, Drawings and Permits, together with all Addenda and Change Orders issued with respect thereto.

CONTRACT PRICE - Total monies payable by the CITY to the CONTRACTOR under the terms and conditions of the Contract Documents.

CONTRACT TIME - The number of days agreed to in the Proposal, commencing with the date of the Notice to Proceed for completion of the work.

CONTROL - shall mean having the primary power, direct or indirect, to influence the management of a business enterprise. The controlling party must have the demonstrable ability to make independent and

unilateral business decisions on a day-to-day basis, as well as the independent and unilateral ability to make decisions which may influence and chart the future course of the business.

DATE OF SUBSTANTIAL COMPLETION - The date when the work on the project, or specified part thereof, is substantially completed in accordance with the Contract Documents, such that the CITY can occupy or utilize the project or specified part thereof for the use and purpose for which it was intended as determined and accepted by the Engineer.

DAYS - Calendar days of 24 hours measured from midnight.

DRAWINGS - The drawings which show the character and scope of the work to be performed and which have been prepared by the DESIGN ENGINEER approved by ENGINEER and are referred to in and are a part of the Contract Documents.

EMERGENCY WORK – Work when an emergency condition arises that necessitates immediate action to minimize damage and inconvenience resulting from such condition. Work may be completed outside of the limitations for “normal” work hours, day, etc.

ENGINEER - The Director of Utilities of the CITY of Hollywood, Florida, or his authorized designee.

EXCUSABLE DELAY - Delay caused by the CITY, hurricane, tornadoes, fires, floods, epidemics or labor strikes.

GENERAL CONDITIONS - That segment of the Contract Specifications incorporating the Provisions common to all CITY Construction Contracts.

INEXCUSABLE DELAY - Any delay caused either (i) by events or circumstances within the control of the CONTRACTOR not specified in the definition of excusable delay.

INSPECTOR - The authorized field representative of the ENGINEER.

LIQUIDATED DAMAGES - The amount prescribed in the General Requirements to be paid the CITY, or to be deducted from any payments due the CONTRACTOR for each day's delay in completing the whole or any specified portion of the work beyond the Contract Time.

LOCAL BUSINESS – shall mean a business which is duly licensed and authorized to engage in the business at issue and which maintains a permanent principal place of operation with full time personnel within the corporate limits of the City of Hollywood, Florida. A Post Office Box (P.O. Box) shall not be sufficient to constitute a “local business.” The business has the burden of demonstrating that it meets this definition.

MINORITY – shall mean a person who is a citizen or lawful permanent resident of the United States and who is a Woman, Black American, Hispanic American, Native American, Asian Pacific American, Subcontinent Asian American or other minorities found to be disadvantaged by the SBA.

NOTICE OF AWARD - The written notice by the CITY to the successful Bidder stating that upon his execution of the Agreement and other requirements as listed therein within the time specified the CITY will sign and deliver the Agreement.

MINORITY BUSINESS ENTERPRISE – shall mean a currently functioning business enterprise which (a) is an independent for profit business concern that is a least 51% owned by minority group member(s); (b) is independently operated and controlled by the minority group member(s); (c) demonstrates the capability to perform a line of business; (d) provides a commercially useful function according to the customs and practices of the industry and (e) is qualified by the City of Hollywood, Florida.

NOTICE TO PROCEED - A written notice by the ENGINEER to the CONTRACTOR fixing the date on which the Contract Time will commence to run and on which the CONTRACTOR shall start to perform his obligation under the Contract Documents.

"OR EQUAL" - Equivalent or superior in construction, efficiency and effectiveness to a type, brand, model or process called out in the Contract Documents to establish a basis of quality as determined by the ENGINEER.

SHOP DRAWINGS - All certified affidavits, drawings, diagrams, illustrations, schedules and other data which are specifically prepared by CONTRACTOR, a Subcontractor, manufacturer, fabricator, supplier or distributor to illustrate some portion of the work and all illustrations, brochures, standard schedules, performance charts, instructions, diagrams and other information prepared by a manufacturer, fabricator, supplier or distributor and submitted by CONTRACTOR to illustrate material or equipment for some portion of the WORK.

SMALL BUSINESS ENTERPRISE – shall mean a currently functioning business enterprise which (a) is an independent for profit concern that is at least 51% owned by non-minority group member(s); (b) is independently operated and controlled by the non-minority group member(s); (c) demonstrates the capability to perform in a line of business; (d) provides a commercially useful function according to the customs and practices of the industry; and (e) is qualified by the City of Hollywood, Florida.

NOTE: In the event 50% of the local business is owned by a minority group member and 50% of the local business is owned by a non-minority group member, the designation selected on the Local Minority Business Enterprise and Local Small Business Enterprise Program application will be accepted.

SMALL BUSINESS NET WORTH SIZE STANDARD – The size standard for a minority business enterprise and a small business enterprise that participates in the City of Hollywood's Local MBE/SBE Program shall mean an independently owned and operated business concern that employs 50 or fewer permanent full-time employees and whose annual net worth does not exceed $2,000,000. To determine the net worth, the City shall consider the most recent annual financial statement for the business or; in the case of sole proprietorships, annual financial statements for the business and the business owner. The applicant must provide documentation to demonstrate that the business employs 50 or fewer permanent full-time employees averaged over a two year period.

SPECIFICATIONS - Division 1 through 50 of these Contract Documents, consisting of administrative details and written technical descriptions of materials, equipment, standards and workmanship.

SUPPLEMENTARY CONDITIONS - Division 1 of the Contract Specifications incorporating the provisions peculiar to a specific project.

SUBCONTRACTOR - An individual, firm or corporation having a direct contract with CONTRACTOR or with any other Subcontractor for the performance of a part of the work

SURETY - The person, firm or corporation responsible for the Bidder's acts in the execution of the Contract, or which is bound to the CITY with and for the CONTRACTOR to insure performance of the Contract and payment of all obligations pertaining to the work.

WORK - All the work materials or products specified, indicated, shown or contemplated in the Contract Documents to construct and complete the improvement, including all alterations, modifications, amendments or extension thereto made by Change Orders.

ARTICLE 2 - ORGANIZATIONAL ABBREVIATIONS

Abbreviations of organizations which may be used in these Specifications are:

AASHTO:	American Association of State Highway and Transportation Officials
ACI:	American Concrete Institute
AIA:	American Institute of Architects
AISC:	American Institute of Steel Construction
AITC:	American Institute of Timber Construction
ANSI:	American National Standards Institute
APWA:	American Public Works Association
ASTM:	American Society for Testing and Materials
ASCE:	American Society of Civil Engineers
ASME:	American Society of Mechanical Engineers
ASHRAE:	American Society of Heating, Refrigerating and Air Conditioning Engineers
AWPA:	American Wood Preservers Association
AWWA:	American Water Works Association
AWS:	American Welding Society
BCEQCB:	Broward County Environmental Quality Control Board
CRSI:	Concrete Reinforcing Steel Institute
FDEP:	Florida Department of Environmental Protection
FDNR:	Florida Department of Natural Resources
FDOT:	Florida Department of Transportation
FPL:	Florida Power and Light
IEEE:	Institute of Electrical and Electronic Engineers
NACE:	National Association of Corrosion Engineers
NCPI:	National Clay Pipe Institute
NEC:	National Electrical Code

NEMA:	National Electrical Manufacturers Association
NFPA:	National Fire Protection Association
OSHA:	Occupational Safety and Health Act
PCI:	Prestressed Concrete Institute
SFBC:	South Florida Building Code, Broward Edition, Latest Revision
SFWMD:	South Florida Water Management District
SSPC:	Structural Steel Painting Council
UL:	Underwriters' Laboratories, Inc.
UNCLE:	Utility Notification Center for Location before Excavation (1-800-432-4770)
USEPA:	United States Environmental Protection Agency
USGS:	United States Geological Survey
WWEMA:	Water and Wastewater Equipment Manufacturers Association

ARTICLE 3 - MISCELLANEOUS PRELIMINARY MATTERS

3.1 Contract Document Discrepancies:

Any discrepancies, conflicts, errors or omissions found in the Contract Documents shall be promptly reported to the ENGINEER who will issue a correction, if necessary, in writing. The CONTRACTOR shall comply with any corrective measures regarding the same as prescribed by the ENGINEER.

3.2 Submissions:

Unless indicated otherwise in the Contract Documents, within seven days subsequent to the CONTRACTOR executing and submitting the required documents of Article 15 in the Instructions to Bidders, the CONTRACTOR shall submit to the ENGINEER an estimated progress schedule indicating the starting and completion days of the various stages of the work. A preliminary Schedule of Values and a preliminary schedule of Shop Drawing submissions may also be required by Section 01 34 00 of Division 1 - General Requirements.

3.3 Pre-construction Conference:

The Contractor will be required to attend a mandatory Pre- Construction Conference for review of the above schedules, establishing procedures and establishing a working understanding among the parties as to the work.

3.4 Contract Time:

The initial Contract Time shall commence on the date of Notice to Proceed and shall exist for a two (2) year term. The CITY reserves the right to renew the contract for three successive one-year terms, providing all terms, conditions and specifications remain the same, both parties agree to the renewal, and such renewal is approved by the CITY.

3.5 Computation of Time:

When any period of time is referred to the Contract Documents by days, it shall be computed to exclude the first and include the last day of such period. If the last day of any such period falls on a Saturday or Sunday or on a legal holiday, such day shall be omitted from the computation.

3.6 Commencement of Work:

The CONTRACTOR shall not perform work at the site prior to the date of the Notice to Proceed.

3.7 Extension of Contract Time:

Extensions of time shall be based solely upon the effect of delays to the work as a whole. Extensions of time shall not be granted for delays to the work, unless the CONTRACTOR can clearly demonstrate, through schedule analysis, that the delay to the work as a whole arose in accordance with Article 11, Changes in Contract Time and that such delays did or will, in fact, delay the progress of work as a whole. Time extensions shall not be allowed for delays to parts of the work that are not on the critical path of the Project schedule. Time extensions shall not be

granted until all float or contingency time, at the time of the delay, available to absorb specific delays and associated impacts, is used.

3.8 Notice and Service Thereof:

All notices, demands, requests, instructions, approvals and claims shall be in writing. Notices, demands, etc. shall be deemed to have been validly given if delivered in person to the individual or to a member of the firm or to an officer of the corporation for whom it is intended, or if delivered at or sent by registered or certified mail, postage prepaid, to the business address as defined at the Pre-Construction Conference.

3.9 Separate Contract:

The CITY reserves the right to let other Contracts in connection with this Project. The CONTRACTOR shall afford other Contractors reasonable opportunity for the introduction and storage for their materials and the execution of their work and shall properly connect and coordinate his work with theirs.

3.10 Assignments of Contract:

No assignment by the CONTRACTOR of the Contract or of any part thereof, or any monies due or to become due thereunder shall be made.

3.11 Patents:

It is mutually understood and agreed that without exception, Contract prices are to include all royalties and costs arising from patents, trademarks, and copyrights in any way involved in the work. It is the intent that whenever the Contractor is required or desired to use any design, device, material or process covered by letters, patent, or copyright, the right for such use shall be provided for by suitable legal agreements with the Patentee or Owner and a copy of this agreement shall be filed with the ENGINEER. However, whether or not such an agreement is made or filed as noted, the CONTRACTOR and the Surety in all cases shall indemnify and save harmless the CITY from any and all claims for infringement by reason of the use of any such patented design, device, material or process, to be performed under the Contract, and shall indemnify the said CITY from any costs, expenses, and damages which it may be obliged to pay, by reason of such infringement, at any time during the prosecution or after the completion of the work.

3.12 Federal Excise Tax:

The forms needed for applying for exemption certificates for materials and equipment, normally subject to the Federal Excise Tax, may be obtained from the Director of Internal Revenue, Jacksonville, Florida.

The CONTRACTOR is solely responsible for obtaining the desired exemption certificate from the Federal Government.

3.13 Savings Due to Excise Tax Exemptions:

The Bidder shall include in the Bid price the estimated cost of all goods, supplies and equipment which will be incorporated in the Work and the taxes that the Bidder would be required to pay if the Bidder were to purchase such goods, supplies or equipment. By subsequent Change Order(s), the parties shall reduce the Bid price to reflect any goods, supplies and equipment purchased directly by City and the resulting tax savings due to City's exemption from Excise Taxes.

CONTRACTOR shall pay all sales, consumer, use and other similar taxes required to be paid by CONTRACTOR in accordance with the laws and regulations of the State of Florida and its political subdivisions. Consistent with the tax exemption for municipalities provided by state law, CITY and CONTRACTOR shall jointly operate so that CITY may purchase directly, goods, supplies and equipment which will be incorporated into the Work. The goods, supplies and equipment that will be purchased by CITY shall be approved in advance by the parties.

With respect to all goods, supplies and equipment to be purchased by CITY, CONTRACTOR shall, on behalf of CITY, take all actions necessary and appropriate to cause all purchases to be made and shall be responsible for delivery of all such goods, supplies and equipment, including verification of correct quantities and documents or orders, coordination of purchases and delivery schedules, sequence of delivery, unloading, handling and storage through installation, obtaining warranties and guarantees required by the Contract Documents, inspection and acceptance of the goods, supplies and equipment at the time of delivery, and other arrangements normally required for the particular goods, supplies or equipment purchased. Unless otherwise directed by CITY, such actions shall also include taking the lead in efforts to resolve any and all disputes with the vendor. CONTRACTOR shall ensure that each vendor of goods, supplies and equipment purchased by CITY agrees in writing to the terms and conditions contained in CITY'S standard purchase order, which terms and conditions are set forth in Section 00 80 00 of the Contract Documents. Even though CITY may purchase such goods, supplies and equipment, the goods, supplies and equipment shall be stored at the site in the same manner as goods, supplies and equipment purchased by CONTRACTOR.

CONTRACTOR shall hold CITY harmless from delays in manufacturing, delivery, and other unforeseen conditions that may arise as part of the procurement of CITY-purchased goods, supplies and equipment.

3.14 Overtime Work:

The CONTRACTOR shall receive additional compensation for overtime work performed for routine and emergency repair services, i.e., work in excess of eight hours in any one calendar day or 40 hours in any one calendar week. Additional compensation will be paid the CONTRACTOR for overtime work only in the event extra work is ordered by the ENGINEER and the Change Order specifically authorizes the use of overtime work and then only to such extent as overtime wages are regularly being paid by the CONTRACTOR for overtime work of a similar nature in the same locality.

3.15 Inspections and Testing during Overtime:

The CONTRACTOR shall establish a normal work schedule which does not exceed eight hours per day in a normal work day nor forty hours per week in a normal work week. Normal work days shall be Monday through Friday. Whenever CONTRACTOR's work requires scheduled overtime,

unless such overtime work is specifically required by the Contract Documents, CONTRACTOR shall reimburse the CITY for the extra costs incurred for providing Inspectors. Overtime shall be scheduled only after CONTRACTOR obtains written permission from the CITY. A change order shall be prepared to cover the CITY costs. Inspector costs shall be charged to the CONTRACTOR at a rate of $80.00 per hour with a minimum of four hours charged for weekends and holidays. If the CONTRACTOR has an overtime work force size of fifty or more persons a second Inspector will be required and the costs for two Inspectors will be $160.00 per hour.

3.16 Nights, Sunday or Holiday Work:

Except upon specific permission of the ENGINEER, as required during emergency conditions, the CONTRACTOR shall not perform any work on Sundays or on legal State or Municipal holidays. In accordance with City of Hollywood Code of Ordinances, Section 21.49, no work between 6:00 p.m. and 8:00 a.m. will be permitted, except in case of an emergency, that violates Section 21.49 concerning noise levels. All costs of testing and inspection performed during night, Sunday or holiday work shall be borne by the CONTRACTOR. The CONTRACTOR shall notify all regulatory agencies, including but not limited to the City Police Department, Fire Department, and Code Enforcement Department.

3.17 Injury or Damage Claims:

Should CITY or CONTRACTOR suffer injury or damage to their person or property because of any error, omission or act of the other party or of any of the other party's employees or agents or others for whose acts the other party is legally liable, claim shall be made in writing to the other party within a reasonable time of the first observance of such injury or damage. However, nothing herein shall be deemed to affect the rights, privileges and immunities of City as are set forth in Section 768.28, Florida Statutes.

ARTICLE 4 - CONTRACT DOCUMENTS

4.1 Intent:

The Contract Documents comprise the entire Agreement between the CITY and CONTRACTOR concerning the work. The Contract Documents can be altered only by Change Order. The Contract Documents are complementary; what is called for by one is as binding as if called for by all. It is the intent of the Contract Documents that the CONTRACTOR, for due consideration, shall furnish all equipment, material, supervision and labor, (except as may be specifically noted otherwise) required or necessary to complete the work in total accordance with said Documents. It is the intent of the Drawings and Specifications to describe the Project to be constructed in accordance with the Contract Documents. Any work that may reasonably be inferred from the Drawings or Specifications as being required to produce the intended result shall be supplied whether or not it is specifically called for.

4.2 Order of Precedence of Contract Documents:

In resolving differences resulting from conflicts, errors or discrepancies in any of the following Contract Documents, the order of precedence shall be as follows:

1. Permits
2. Change Orders
3. Contract Agreement
4. Specification
5. Drawings

Within the Specifications the order of precedence is as follows:

1. Addenda
2. Notice to Bidders
3. Instructions to Bidders
4. Supplementary General Conditions
5. General Conditions
6. Division 1, General Requirements
7. Technical Specifications
8. Referenced Standard Specifications

With reference to the Drawings the order of precedence is as follows:

1. Figures Govern over Scaled Dimensions
2. Detail Drawings Govern over General Drawings
3. Change Order Drawings Govern over Contract Drawings
4. Contract Drawings Govern over Standard or Shop Drawings

4.3 Reference To Standards:

Any reference to standard Specifications, manuals or codes of any organization or governmental authority shall mean the latest edition, in effect as of the Bid Opening Date.

ARTICLE 5 - BONDS AND INSURANCE

5.1 Bid Guarantee:

Bidders maybe required to submit a Bid Guarantee in an amount indicated in the NOTICE TO BIDDERS. This Guarantee may be a Certified or Cashier's Check on a solvent National or State Bank, or a Bid Bond written by a Surety licensed to do business in Florida and rated at least "A", Class X in the latest edition of ''Best's Key Rating Guide'' published by A.M. Best Company.

5.2 Performance and Payment Bond:

CONTRACTOR shall furnish Performance and Payment Bonds, in amounts equal to the Contract Price as Security for the faithful performance and payment of CONTRACTOR's obligations. The Bond or Bonds shall remain in effect one year after the date of final payment. The Surety must be qualified as specified above in Paragraph 5.1. However, the City reserves the right to require additional bonds as set forth in Article 5 of the Contract.

5.3 Signatures:

All Bonds signed by an Agent must be accompanied by a Certified copy of the authority to act, with said copy having been signed (not typed nor printed) by an Officer of the Surety and carrying the seal of the Surety.

5.4 Insurance Coverage:

Within ten days from Notice of Award the CONTRACTOR shall purchase and maintain such insurance as will protect him from claims set forth below which may arise out of or result from the CONTRACTOR's operations under the Contract or Contract Documents, whether such operations be by himself or by any Subcontractor or by anyone directly or indirectly employed by any of them, or by anyone for whose acts any of them may be liable:

A. Claims under Workmen's Compensation, Disability Benefit and other similar employer's

liability acts;

B. Claims for damages because of bodily injury, sickness or disease, or death, or death of his employees;

C. Claims for damages because of bodily injury, sickness or disease, or death of any person other than his employees;

D. Claims for damages covered by personal injury liability which are sustained (1) by any person as a result of any offense directly or indirectly related to the employment of such person by the CONTRACTOR, or (2) by any other person;

E. Claims for damages, other than to the work itself, because of injury to or destruction of tangible property, including loss of use resulting therefrom; and

F. Claims for damages because of bodily injury or death of any person or property damage arising out of the ownership, maintenance or use of any motor vehicle.

5.5 Certificates of Insurance:

Within ten days of award, the Contractor shall obtain a Certificate of Insurance reflecting the necessary coverages as required by the Contract Documents. Certificates of Insurance shall contain a provision that coverages afforded under the policies will not be canceled until at least 30 days prior written notice has been given to the CITY. The City of Hollywood must be named as additional insured on all coverage with the exception of Workmen's Compensation. Policies shall be issued by companies authorized to do business under the Laws of the State of Florida. Policyholders and Financial Ratings must be no less than "A" and Class X respectively in the latest edition of "Best Key Rating Guide", published by A.M. Best Company.

5.6 Insurance Limits of Liability:

The insurance required by this Article shall be written for no less than the level of liability specified in "Insurance Requirements", Section 2 of the Supplementary General Conditions, or required by law, whichever is greater. The insurance shall include contractual liability insurance applicable to the CONTRACTOR's obligations under this contract.

The level required in Section 2 of the Supplementary General Conditions will not be reduced for any reason.

ARTICLE 6 - AVAILABILITY OF LAND; REFERENCE POINTS

6.1 Rights-of-Way:

Lands or Rights-of-Way for the work to be constructed under the Contract will be provided by the CITY. Nothing contained in the Contract Documents shall be interpreted as giving the CONTRACTOR exclusive occupancy of the lands or Rights-of-Way provided. Any additional lands or Rights-of-Way required for construction operations shall be provided by the CONTRACTOR at his own expense; provided, that the CONTRACTOR shall not; and the CITY nor the ENGINEER shall not be liable for any claims or damages resulting from the CONTRACTOR's unauthorized trespass or use of any such properties.

6.2 Permits:

When required by Article 21 of the Instruction to Bidders, the CONTRACTOR shall secure, from the agencies having jurisdiction, the necessary permits to create obstructions, to make excavations

if required under the Contract, and to otherwise encroach upon Rights-of-Way, and to present evidence to the ENGINEER that such permission has been granted, before work is commenced. Regulations and requirements of all agencies concerned shall be strictly adhered to in the performance of the Contract. The enforcement of such requirements under the Contract shall not be made the basis for additional compensation.

6.3 Lines and Grades:

The CONTRACTOR shall furnish all grades and all other lines required for the proper execution of the work.

ARTICLE 7 - CONTRACTOR'S RESPONSIBILITIES

7.1 Laws/Regulations to Be Observed:

The CONTRACTOR shall familiarize himself and comply with all Federal, State, County and CITY laws, by-laws, ordinances or regulations controlling the action or operation of those engaged or employed in the work or affecting material used, and govern himself in accordance with them. He shall indemnify and save harmless the CITY and all of its officers, agents and employees against any claims or liability arising from or based on the violation of any such laws, by-laws, ordinances, regulations, orders or decrees, whether by himself or his employees or Subcontractors.

7.2 Indemnification of City:

(a) CONTRACTOR shall, at all times hereafter, indemnify, hold harmless and defend CITY, its agents, servants and employees from and against any claim, demand or cause of action of any kind or nature arising out of error, omission or negligent act of CONTRACTOR, its agents, servants or employees in the performance of services under this Agreement.

(b) CONTRACTOR further agrees, at all times hereafter, to indemnify, hold harmless and defend CITY, its agents, servants and employees from and against any claim, demand or cause of action of any kind or nature arising out of any conduct or misconduct of CONTRACTOR resulting from the performance of services under the Contract Documents.

(c) The obligations of the CONTRACTOR above shall not extend to the liability of the City of Hollywood.

(d) The provisions of (a) and (b) above shall survive the expiration or earlier termination of the Contract Documents.

7.3 Guarantee of Payments:

The CONTRACTOR guarantees the payments of all just claims for materials, supplies, tools, labor and other just claims against him, or any Subcontractor in connection with this Contract, and his bond will not be released by final acceptance and payment by the CITY unless all such claims are paid or released.

7.4 Permits and Licenses:

The CONTRACTOR shall obtain all permits and licenses required by the Contract Documents. A copy of the permit(s) and such conditions and requirements thereon are a part of the Contract Documents. Failure to obtain such permits or licenses shall subject the CONTRACTOR to the provisions of the South Florida Building Code, Broward Edition.

7.5 Emergencies:

In emergencies affecting the safety or protection of persons or the work or property at the site or adjacent thereto, CONTRACTOR, without special instruction or authorization from ENGINEER or CITY, is obligated to act to prevent threatened damage, injury or loss. CONTRACTOR shall give ENGINEER prompt written notice of any significant changes in the work or deviations from the Contract Documents caused thereby.

7.6 Substitutes or "Or Equal":

A. Substitutes or "Or-Equal" Materials or Equipment:

Whenever materials or equipment are specified or described in the Contract Documents by using the name of a proprietary item or the name of a particular supplier the naming of the item is intended to establish the type, function and quality required. Unless the name is followed by words indicating that no substitution is permitted, materials or equipment of other Suppliers may be accepted by the ENGINEER if sufficient information submitted by the CONTRACTOR to allow the ENGINEER to determine that the material or equipment proposed is equivalent or equal to that named. The ENGINEER will be allowed 30 days within which to evaluate each proposed substitute. The ENGINEER will be the sole judge of acceptability, and NO SUBSTITUTE WILL BE ORDERED, INSTALLED OR UTILIZED WITHOUT THE ENGINEER's PRIOR WRITTEN ACCEPTANCE which will be evidenced by either a Change Order or an approved set of Shop Drawings. Requests for review of substitute items of material and equipment will not be accepted by the ENGINEER from anyone other than the CONTRACTOR. The procedure for review by the ENGINEER is as follows:

If the CONTRACTOR wishes to furnish or use a substitute item of material or equipment, the CONTRACTOR shall make written application to the ENGINEER for acceptance thereof, certifying that the proposed substitute will perform adequately the functions and achieve the results called for by the general design, be similar and of equal substance to that specified and be suited to the same use as that specified. In addition, the application shall

1. State that the evaluation and acceptance of the proposed substitute will not prejudice the CONTRACTOR's achievement of completion on time.

2. State whether or not acceptance of the substitute for use in the WORK will require a change in any of the Contract Documents to adapt design to the proposed substitute. The CONTRACTOR shall be responsible for any extra design adaptation costs associated with a proposed substitute.

3. State whether or not incorporation or use of the substitute in connection with the work is subject to payment of any license fee or royalty.
4. Provide complete substitute identification and description, including manufacturer's and local distributor's name and address, performance and test data, and reference standards.

5. Provide samples, as required by ENGINEER.

6. Provide name and address of similar projects on which the proposed substitute has been used, and date of installation.
7. Identify all variations of the proposed substitute from that specified.

8. Indicate available maintenance, repair and replacement service.

9. Submit an itemized estimate of all costs that will result directly or indirectly from acceptance of such substitute, including costs of redesign and claims of other Contractors affected by the resulting change. The CONTRACTOR shall be responsible for the costs of redesign and claims of other Contractors.

10. Provide any additional data about the proposed substitute as the ENGINEER may require of the CONTRACTOR.

B. Substitute means, method, technique, sequence or procedure of construction:

If a specific means, method, technique, sequence or procedure of construction is indicated in or required by the Contract Documents, the CONTRACTOR may furnish or utilize a substitute means, method, sequence, technique or procedure of construction acceptable to the ENGINEER, if the CONTRACTOR submits sufficient information to allow the ENGINEER to determine that the substitute proposed is equivalent to that indicated or required by the Contract Documents. The procedure for review by the ENGINEER will be similar to that provided in Paragraph 7.6 A.

C. The CITY may require the CONTRACTOR to furnish at the CONTRACTOR's expense, a special performance guarantee or other surety with respect to any substitute.

D. The ENGINEER will record time required by the ENGINEER and/or the ENGINEER's consultants in evaluating substitutions proposed by the CONTRACTOR and in making changes in the Contract Documents occasioned thereby. Whether or not the ENGINEER accepts a proposed substitute, THE CONTRACTOR SHALL REIMBURSE THE CITY FOR THE CHARGES OF THE ENGINEER AND THE ENGINEER's CONSULTANTS FOR EVALUATING EACH PROPOSED SUBSTITUTE.

E. Any and all costs which result from changes to/adaptations of the work shall be paid by the CONTRACTOR including but limited to design, materials, installation, etc.

7.7 Shop Drawings:

Shop Drawing submittals shall be as follows:

A. The CONTRACTOR shall submit a sufficient number of copies of each Shop Drawing to enable the ENGINEER to retain three copies unless additional copies are specified in the Contract Documents. Resubmissions of Shop Drawings shall be made in the same quantity until final approval is obtained.

B. The CONTRACTOR shall submit Shop Drawings for all equipment, apparatus, machinery, fixtures, piping, fabricated structures, manufactured articles and structural components Manufacturer's Certified Affidavit that the item supplied complies with the design Specifications, and all other submittal requirements.

C. Shop Drawings for structural components, electrical or mechanical systems shall be certified by a Registered Engineer of the discipline involved.

D. The CONTRACTOR shall thoroughly review and check the Shop Drawings, and each and every copy shall show his approval thereon. If the Shop Drawings show or indicate departures from the Contract requirements, the CONTRACTOR shall make specific mention thereof in his letter of transmittal. Failure to point out such departures shall not relieve the CONTRACTOR from his responsibility to comply with the Drawings and

Specifications.

E. No approval will be given to partial submittals of Shop Drawings for items which interconnect and/or are interdependent. It is the CONTRACTOR's responsibility to assemble the Shop Drawings for all such interconnecting and/or interdependent items, check them himself and then make one submittal to the ENGINEER along with his comments as to compliance, non-compliance, or features requiring special attention.

F. If catalog sheets or prints of manufacturer's standard drawings are submitted as Shop Drawings, any additional information or changes on such Drawings shall be typewritten or lettered in ink.

G. The CONTRACTOR shall keep one set of Shop Drawings marked with the ENGINEER's approval at the job site at all times.

H. Where a Shop Drawing or sample is required by the Specifications, no related work shall be commenced until the submittal has been reviewed and approved by the ENGINEER.

I. Approval of the Shop Drawings shall constitute approval of the subject matter thereof only, and not of any structure, material, equipment or apparatus shown or indicated. The approval of the Shop Drawings will be general and shall not relieve the CONTRACTOR of responsibility for the accuracy of such Drawings, nor for the proper fitting and construction of the work, nor for the furnishing of materials or work required by the contract and not indicated on the Drawings. Approval shall not relieve the CONTRACTOR from responsibility for errors or omissions of any sort on the Shop Drawings.

7.8 Personnel:

A. Supervision and Superintendence:

1. The CONTRACTOR shall supervise and direct the work competently and efficiently, devoting such attention thereto and applying such skills and expertise as may be necessary to perform the work in accordance with the Contract Documents. The CONTRACTOR shall be solely responsible for the means, methods, techniques, sequences and procedures of construction, but the CONTRACTOR shall not be solely responsible for the negligence of others in the design or selection of a specific means, method, technique, sequence or procedure of construction which is indicated in and required by the Contract Documents. The CONTRACTOR shall be responsible to see that the finished work complies accurately with the Contract Documents.

2. The CONTRACTOR shall keep on the work at all times during its progress a competent resident Superintendent fluent in both oral and written communication in the English language, who shall not be replaced without written notice to the ENGINEER except under extraordinary circumstances. The Superintendent will be the CONTRACTOR's representative at the site and shall have authority to act on behalf of the CONTRACTOR. All communications given to the Superintendent shall be as binding as if given to the CONTRACTOR.

B. Workforce:

1. None but skilled workers shall be employed on work requiring special qualifications. When required in writing by the ENGINEER, the CONTRACTOR or any Subcontractor shall discharge any person who is, in the opinion of the ENGINEER, incompetent, disorderly or otherwise unsatisfactory, and shall not again employ such discharged

person on the work except with the consent of the ENGINEER. Such discharge shall not be the basis of any claim for damages against the CITY or any CITY agents.

2. With respect to all skilled, semi-skilled and unskilled workers employed on the Project under this Contract, preference in employment shall be given to persons residing in Hollywood when such persons are available and qualified to perform the work to which the employment relates. No person shall be employed in violation of the State or National Labor Laws. No person under the age of 16 years shall be employed on a Project under the Contract. No person whose age or physical condition is such as to make his employment dangerous to his health or safety or to the health or safety of others shall be employed on the Project under this Contract; provided that this shall not operate against the employment of physically handicapped persons, otherwise employable where such persons may be safely assigned to work which they can ably perform. No person currently serving sentences in a penal or correctional institution and no inmate of an institution for mentally defective shall be employed on a Project under this Contract without specific approval of the ENGINEER.

3. No discrimination shall be made in the employment of persons on the work by the CONTRACTOR or by any Subcontractor under him, because of the race, color, sex, age or religion of such persons, and there shall be full compliance with the provisions of applicable State and Federal laws in this regard.

7.9 Safety and Protection:

A. Federal Safety and Health Regulations:

The CONTRACTOR and Subcontractors shall comply with the provisions of the Occupational Safety and Health Standards, promulgated by the Secretary of Labor under the "Occupational Safety and Health Act of 1970".

B. Responsibilities:

The CONTRACTOR shall be responsible for initiating, maintaining and supervising all safety precautions and programs in connection with the work. The CONTRACTOR shall take all necessary precautions for the safety of, and shall provide the necessary protection to prevent damage, injury or loss to:

1. All employees on the work and other persons who may be affected thereby.

2. All the work and all materials or equipment to be incorporated therein, whether in storage on or off the site.

3. Other property at the site or adjacent thereto, including trees, shrubs, lawns, walks, pavements, roadways, structures and utilities not designated for removal, relocating or replacement in the course of construction.

C. Designated Safety Officer:

The CONTRACTOR shall designate a responsible member of his organization at the site whose duty shall be the prevention of accidents. This person shall be the CONTRACTOR's Superintendent unless otherwise designated in writing by the CONTRACTOR to the ENGINEER.

D. Protection of the Work:

Until acceptance of the work by the CITY, it shall be under the charge and in care of the CONTRACTOR and he shall take every necessary precaution against injury or damage to the work by action of the elements or from the execution or from the non-execution of the work. The CONTRACTOR shall rebuild, restore and make good, at his own expense, all injuries or damages to any portion of the work occasioned by any of the above causes before its completion and acceptance.

7.10 Traffic Control, Public Safety and Convenience:

A. The CONTRACTOR shall at all times conduct his work so as to assure the least possible obstruction to traffic and inconvenience to the general public, and provide adequate protection of persons and property in the vicinity of the work.

B. WHEN THE NORMAL FLOW OF TRAFFIC WILL BE IMPAIRED OR DISRUPTED IN ANY MANNER ON ANY STREET, THE CONTRACTOR SHALL NOTIFY THE POLICE TRAFFIC SERGEANT AT (954) 921-3610 AT LEAST 48 HOURS IN ADVANCE.

C. Streets shall not be closed, except when and where directed by the ENGINEER, and whenever a street is not closed the work must be conducted with the provision for safe passageway for traffic at all times. The CONTRACTOR shall make all necessary arrangements concerning maintenance of traffic and selection of detours required.

D. When permission has been granted to close an existing roadway, or portion thereof, the CONTRACTOR shall furnish and erect signs, barricades, lights, flags and other protective devices as necessary subject to the approval of the ENGINEER. From sunset to sunrise, the CONTRACTOR shall furnish and maintain as many yellow lights as the ENGINEER may direct.

E. During working hours the CONTRACTOR shall furnish watchmen in sufficient numbers to protect and divert the vehicular and pedestrian traffic from working areas closed to traffic, or to protect any new work. Failure to comply with this requirement will result in the ENGINEER shutting down the work until the CONTRACTOR shall have provided the necessary protection.

F. No separate payment will be made for such signs, barricades, lights, flags, watchmen or other protective devices as required, with all costs thereof deemed to be included in the prices bid for the various items scheduled in the bid.

G Sidewalks, gutters, drains, fire hydrants and private drives shall, insofar as practicable, be kept in condition for their intended uses. While the work is actually going on at any location, as much as half the street width at that location may be barricaded to exclude traffic entirely, but street traffic shall not be obstructed needlessly. Fire hydrants on or adjacent to the work shall be kept accessible to fire apparatus at all times, and no material or obstruction shall be placed within ten feet of any such hydrant.

H. Construction material stored upon the public street shall be placed so as to cause as little obstruction to the general public as is reasonably possible.

7.11 Use of Explosives:

When the use of explosives is necessary for the prosecution of the work, the CONTRACTOR shall observe the utmost care so as not to endanger life or property, and whenever directed, the number and size of charges shall be limited. All explosives shall be stored in a secure manner and all such

storage places shall be marked clearly "DANGEROUS EXPLOSIVES" and shall be in care of a competent watchman at all times. The CONTRACTOR must familiarize himself with all laws and ordinances pertaining thereto, and govern himself and his employees accordingly.

7.12 Loading of Structures:

The CONTRACTOR shall not load nor permit any part of any structure to be loaded in any manner that will endanger the structure, nor shall the CONTRACTOR subject any part of the work or adjacent property to stresses or pressures that will endanger it.

7.13 Concerning Subcontractors:

A. The CONTRACTOR, with his own forces, shall perform no less than 25% of the work as determined by the Contract price. Each Subcontractor shall be properly licensed for the type of work he is to perform.

B. A copy of each Sub-Contract shall be filed promptly with the ENGINEER upon request. Each Sub-Contract shall contain a reference to the Contract between the CITY and the CONTRACTOR, and the terms and conditions of the Contract shall be made a part of each Sub-Contract. Each Sub-Contract shall provide for annulment of same by the CONTRACTOR upon written order of the ENGINEER if the Subcontractor fails to comply with the requirements of this Contract.

C. The CONTRACTOR shall be responsible to the CITY and ENGINEER for the acts and omissions of his Sub- Contractors and their employees to the same extent as he is responsible for the acts and omissions of his own employees. Nothing contained in this Contract shall create any contractual relationship between any Subcontractor and the CITY or ENGINEER nor relieve the CONTRACTOR of any liability or obligation under this Contract.

7.14 Materials and Equipment:

A. Material for the Work:

1. The CONTRACTOR shall furnish all materials, equipment, labor, transportation, construction equipment and machinery, tools, appliances, fuel, power, light, heat, telephone, water and sanitary facilities and all other facilities and incidentals necessary for the execution, testing, initial operation and completion of the work.

2. Unless otherwise specified, shown or permitted by the ENGINEER, all material and equipment incorporated in the work shall be new and of current manufacture. The ENGINEER may request the CONTRACTOR to furnish manufacturer's certificates to this effect.

3. The ENGINEER may require any or all materials to be subjected to test by means of samples or otherwise, at production points or after delivery. The CONTRACTOR shall afford such facilities as the ENGINEER may require for collecting and forwarding samples, which samples shall be furnished by the CONTRACTOR without charge. The CONTRACTOR shall furnish evidence satisfactory to the ENGINEER that the materials and finished articles have passed the required test prior to the incorporation of such materials and finished articles in the work. Unless otherwise provided, the cost of such inspection and testing shall be as provided in Article 12.2.

4. All packaged manufactured products for use on the work shall be delivered to the work

in their original, unopened packages, bearing thereon the manufacturer's name and the brand name of the product.

5. Wherever any product or material is selected to be used on the work, all such products or material shall be of the same brand and manufacture throughout the work.

6. All equipment, tools and machinery used for handling material or executing any part of the work shall be maintained in a satisfactory working condition. All equipment utilized on any portion of the work shall be such that no injury to personnel, the work, adjacent property or other objects will result from its use.

7. All materials and equipment shall be applied, installed, connected, erected, used, cleaned and conditioned in accordance with the instructions of the applicable manufacturer, fabricator, supplier or distributor, except as otherwise provided in the Contract Documents.

B. Storage of Materials:

1. All materials and equipment including that ordered by the CITY designed for permanent installation in the work shall be properly stored by the CONTRACTOR to insure protection against deterioration of any type. These materials shall be placed as to cause a minimum of inconvenience to other contractors on the work and to the public. The storage piles shall be arranged to facilitate inspections, and any deterioration shall be grounds for rejection.

2. Materials stored in public Rights-of-Way, shall be stored in such a manner so as to be compatible with the Traffic Control requirements set forth in Paragraph 7.10. Materials shall be stored so as not to deny access to public or private property. Stored materials shall be adequately marked with barricades and/or flashing warning lights, where necessary, so as to protect the materials from damage and to protect the public health, safety and welfare.

3. Lawns, grass plots or other private property shall not be used for storage purposes without written permission of the Owner or Lessee of that private property. Should the CONTRACTOR desire to store equipment or materials of any kind on the property of the CITY, he must obtain permission from the ENGINEER. The CITY reserves the right to order materials to be removed or relocated in such approved storage areas, if necessary.

4. The protection of stored materials shall be the CONTRACTOR's responsibility and the CITY OF HOLLYWOOD shall not be liable for any loss of materials, by theft or otherwise, nor for any damage to the stored materials.

C. Salvage of Materials and Equipment:

The CITY reserves the right to retain title to all soil, sand, stone, gravel, equipment, machinery or any other material that was a part of the structure, site or Right- of-Way and which was developed from excavations or other operations connected with the work. The CONTRACTOR will be permitted to use in the work, without charge, any such material which meets the requirements of the Contract Documents. For that material which the CITY desires to retain the CONTRACTOR shall, at his expense, transfer to a site within the CITY as designated by the ENGINEER. That material which the CITY does not wish to retain shall be the property of the CONTRACTOR and removed from the site at CONTRACTOR's expense.

7.15 Temporary Utilities:

The CONTRACTOR shall provide and maintain at his own expense, all water, power, telephone and sanitary facilities as required to comply with State and/or local Codes and Regulations. If water, including that for testing is required, it is the CONTRACTOR's responsibility to arrange through the CITY Water Department for a water meter. A deposit to be paid by the CONTRACTOR is required for meter rental and all water shall be purchased at the prevailing rate.

7.16 Review of Records:

The CONTRACTOR shall allow and permit the ENGINEER or his duly authorized representative to inspect and review all payrolls, records of personnel, conditions of employment, invoice of materials, books of accounts and other relevant data and records pertinent to the CONTRACT and Sub-Contracts.

7.17 Use of Premises:

CONTRACTOR shall confine construction equipment, the storage of materials and equipment and the operations of workmen to areas permitted by law, ordinances, permits or required by the Contract Documents, and shall not interfere with the premises or operation of the City Utilities facilities with construction equipment or other materials or equipment. Construction which interferes with Plant Operations shall be fully coordinated and approved by the ENGINEER.

7.18 CONTRACTOR's Daily Reports:

Except where otherwise provided, the CONTRACTOR shall complete a daily report indicating manpower, major equipment, Subcontractors, etc., involved in the performance of the work. The daily report shall be completed on forms approved by the ENGINEER, and shall be submitted to the ENGINEER at the conclusion of each work day.

7.19 Record Documents:

The CONTRACTOR shall keep one record copy of all Specifications, Drawings, Addenda, Modifications, Shop Drawings and samples at the site, in good order and annotated to show all changes made during the construction process. These shall be available to ENGINEER for examination and shall be delivered to ENGINEER upon completion of the work.

7.20 Cleanliness of the Site:

During the progress of the work, The CONTRACTOR shall keep the premises free from accumulations of waste materials, rubbish and other debris resulting from the work. At the completion of the work the CONTRACTOR shall remove all waste materials, rubbish and debris from and about the premises as well as all tools, appliances, construction equipment and machinery and surplus materials, and shall leave the site clean and ready for occupancy by the CITY. The CONTRACTOR shall restore to their original condition those portions of the site not designated for alteration by the Contract Documents.

7.21 Dust Control:

It shall be the CONTRACTOR's responsibility to control dust by watering as directed by the ENGINEER. The water used shall be paid for by the CONTRACTOR. Should the CONTRACTOR fail to control dust to the satisfaction of the ENGINEER, the CITY will control the dust by whatever means the CITY desires and the CONTRACTOR shall pay all expenses incurred by the CITY associated with the control of the dust.

7.22 Continuing the Work:

The CONTRACTOR shall carry on the work and maintain the Progress Schedule during all disputes or disagreements with the CITY. No work shall be delayed or postponed pending resolution of any disputes or disagreements, except as the CONTRACTOR and the CITY may otherwise agree in writing.

7.23 Indemnification:

In consideration of the amount listed in the Schedule of Prices Bid and other valuable consideration, the Contractor shall defend, indemnify and save harmless the CITY, its officers, agents, and employees from or on account of any personal injury, loss of life or damage to property received or sustained by any person or persons during or on account of any operations connected with the construction of this Project; or by or in consequence of any negligence (excluding negligence of the CITY), in connection with the same; or by use of any improper materials or by or on account of any use of any improper materials or by or on account of any act or omission of the said Contractor or his subcontractor, agents, servants or employees.

Contractor agrees to indemnify and save harmless the CITY against any liability arising from or based upon the violation of any federal, state, county or city laws, by-laws, ordinances or regulations by the Contractor, his subcontractor, agents, servants or employees. Contractor further agrees to indemnify and save harmless the CITY from all such claims and fees, and from any and all suits and actions of every name and description that may be brought against the CITY on account of any claims, fees, royalties, or costs for any invention or patent, and from any and all suits and actions that may be brought against the CITY for the infringement of any and all patents or patent rights claimed by any person, firm, or corporation.

The indemnification provided above shall obligate the Contractor to defend at his own expense or to provide for such defense, at the CITY's option, any and all claims or liability and all suits and actions of every name and description that may be brought against the Owner which may result from the operations and activities under this Contract whether the construction operations be performed by the Contractor, his subcontractor or by anyone directly or indirectly employed by either.

Nothing in this indemnification shall be deemed to affect the rights, privileges or immunities of the CITY as set forth in Section 768.28, Florida Statutes.

The CITY will pay to the Contractor the specific consideration, in the amount stated in the Schedule of Prices Bid. The Contractor shall acknowledge the receipt of payment and other good and valuable consideration from the Owner which has been paid to him as specific consideration for the indemnification provided herein and in accordance with the provisions of Chapter F.S.A., Section 725.06.

ARTICLE 8 - CITY'S RESPONSIBILITIES

8.1 Communications:

The CITY shall issue all communications to the CONTRACTOR through the ENGINEER.

8.2 Furnish Contract Documents:

The CITY shall furnish the number of Contract Documents as specified in the Supplementary General Conditions to the CONTRACTOR at no cost. Referenced Standard Specifications Manuals, guidebooks, etc., will not be provided.

8.3 Furnish Right-of-Way:

The CITY shall furnish the necessary land or Right-of-Way on which the work is to be

accomplished, and will provide lines and grades as specified in Article 6.

8.4 Timely Delivery of Materials:

The CITY shall be responsible for the delivery of any CITY furnished material, equipment or labor as specified in the Contract Documents.

ARTICLE 9 - ENGINEER'S STATUS

9.1 Authority of the Engineer:

A. The general supervision of the execution of this Contract is vested in the ENGINEER who is the CITY's sole representative during the construction period. The instructions of the ENGINEER are to be strictly and promptly followed in every case. The CONTRACTOR's representative (Article 7.8 A. 1.) shall be responsible for the execution of any instructions given by the ENGINEER during the absence of the CONTRACTOR.

B. The ENGINEER is the initial interpreter of the requirements of the Contract Documents and judge of the acceptability of the work. Claims, disputes and other matters relating to the acceptability of work or requirements of the Contract Documents shall be referred in writing to the ENGINEER within 15 days of the event, with a request for a formal decision, which the ENGINEER will render in writing within a reasonable time. This rendering of a decision by the ENGINEER will be a condition precedent to any exercise by the CITY or CONTRACTOR of rights or remedies as either may otherwise have under the Contract Documents or at law in respect to any such claim, dispute or other matter.

C. The ENGINEER will issue with reasonable promptness any written clarifications or interpretations of the Contract Documents as he shall deem necessary, which shall be consistent with or reasonably inferable from the overall intent of the Contract Documents. If, as a result of a clarification or interpretation, either the CONTRACTOR or ENGINEER believes a Change Order is justified, it shall be submitted.

D. The ENGINEER has approval authority over the acceptability of all material or equipment furnished, Shop Drawings, Change Orders, work performed and the rate of progress of the work. Verification of the quantities of work performed for pay purposes is the responsibility of the ENGINEER.

E. The ENGINEER also has the authority to disapprove or reject work which is defective, and may require special inspection or testing of the work, whether or not it is fabricated, installed or completed.

F. The ENGINEER has the authority to suspend the work wholly or in part for such period or periods as may be deemed necessary, due to the unsuitable prosecution of the work, or for such time as is necessary due to failure on the part of the CONTRACTOR to carry out orders given or perform any or all provisions of the Contract. The CONTRACTOR shall not suspend the work and shall not remove any equipment, tools, lumber or other materials without the written permission of the ENGINEER.

9.2 Access to the Work:

The ENGINEER is to have free access to the materials and work at all times for laying out, measuring or inspecting same, and the CONTRACTOR is to afford him all necessary facilities and assistance for so doing.

9.3 Limitations on The ENGINEER's Responsibilities:

A. Neither the ENGINEER's authority to act under this Article or elsewhere in the Contract Documents nor any decision made by the ENGINEER in good faith either to exercise or not exercise such authority shall give rise to any duty or responsibility of the ENGINEER to the CONTRACTOR, any Subcontractor, any manufacturer, fabricator, supplier or distributor or any of their agents or employees or any other person performing any of the work.

B. Whenever in the Contract Documents the terms "as ordered", "as directed", "as required", "as allowed" or terms of like effect or import are used, or the adjectives "reasonable", "suitable", "acceptable", "proper" or "satisfactory" or adjectives of like effect or import are used, to describe requirement, direction, review or judgment of the ENGINEER as to the work, it is intended that such requirement, direction, review or judgment will be solely to evaluate the work for compliance with the Contract Documents (unless there is a specific statement indicating otherwise). The use of any such term or adjective never indicates that the ENGINEER has authority to supervise or direct performance of the work.

C. The ENGINEER will not be responsible for the CONTRACTOR's means, methods, techniques, sequences or procedures of construction, nor the safety precautions and programs incident thereto, and the ENGINEER will not be responsible for the CONTRACTOR's failure to perform the work in accordance with the Contract Documents.

D. The ENGINEER will not be responsible for the acts or omissions of the CONTRACTOR or of any Subcontractors, or of the agents or employees of any CONTRACTOR or subcontractor, or of any other persons at the site or otherwise performing any of the work.

9.4 Inspectors:

A. Inspectors employed by the CITY assist the ENGINEER in ascertaining the work conforms to the Contract Documents and are authorized to inspect all work done and material furnished as representatives of the ENGINEER. Inspectors shall be stationed at the site of the work to report to the ENGINEER as to the progress of the work and the quality of workmanship and material.

B. In case of any dispute arising between the CONTRACTOR and the Inspector, the Inspector shall have the authority to reject material or to suspend the work until the question of issue can be referred to and decided upon by the ENGINEER.

C. If the CONTRACTOR refuses to suspend operation on verbal order, the Inspector shall issue a written order giving the reason for shutting down the work. After placing the order in the hands of the man in charge, the Inspector shall immediately leave the job. Work done during the absence of the Inspector, after such written notice, will not be accepted nor paid for.

D. Inspectors are not authorized to revoke, alter, enlarge, relax or release any requirements of these Contract Documents, nor to issue instructions contrary to them. Inspectors shall in no case act as foreman or perform other duties for the CONTRACTOR, nor interfere with management of the work by the latter. Any instructions which Inspectors may give the CONTRACTOR shall in no way be construed as releasing the CONTRACTOR from fulfillment of the terms of the Contract.

E. The payment of any compensation, whatever may be its character or form, or the giving of any gratuity, or the granting of any valuable favor, by the CONTRACTOR to any Inspector, directly or indirectly, is strictly prohibited and any such act on the part of the CONTRACTOR will constitute a violation of this Contract and may subject the CONTRACTOR to other penalties provided for by law or ordinance.

9.5 Inspections:

A. The ENGINEER will make, or have made, such inspections and tests as he deems necessary to assure that the work is being accomplished in accordance with the requirements of the Contract. In the event such Inspections or tests reveal non- compliance with the requirements of the Contract, the CONTRACTOR shall bear the cost of such corrective measures as well as the cost of subsequent reinspection and retesting.

B. Work done in the absence of a prescribed inspection may be required to be removed and replaced under proper inspection. The entire cost of removal and replacement, including the cost of all material which may be furnished by the CITY and used in the work thus removed, shall be borne by the CONTRACTOR, regardless of whether the work removed is found to be defective or not. Work covered up without the authority of the ENGINEER, shall, upon order of the ENGINEER, be uncovered to the extent required, and the CONTRACTOR shall similarly bear the entire cost of performing all the work and furnishing all the material necessary for the removal of the covering and its subsequent replacement.

C. Unless otherwise provided, the cost of inspection and all inspection fees imposed by public agencies other than the fees associated with the issuance of the Master Building Permit by the City of Hollywood shall be paid by the CONTRACTOR.

D. No inspection nor any failure to inspect at any time or place shall relieve the CONTRACTOR from any obligation to perform all of the work in strict conformance with the requirements of the Contract Documents.

ARTICLE 10 - CHANGES IN THE WORK/CONTRACT PRICE

10.1 Changes in the Work or Terms of Contract Documents:

A. Without invalidating the Contract and without notice to any surety CITY reserves and shall have the right, from time to time to make such increases, decreases or other changes in the character or quantity of the Work as may be considered necessary or desirable to complete fully and acceptably the proposed construction in a satisfactory manner. Any extra or additional work within the scope of this Project must be accomplished by means of appropriate Clarifications, or Change Orders.

B. Any changes to the terms of the Contract Documents must be contained in a written document, executed by the parties hereto, with the same formality and of equal dignity prior to the initiation of any work reflecting such change.

This section shall not prohibit the issuance of Change Orders executed only by CITY as hereinafter provided.

10.2 Supplemental Instructions - Clarifications:

A. The CITY, through the ENGINEER, shall have the right to approve and issue Clarifications setting forth written interpretations of the intent of the Contract Documents and ordering minor changes in Work execution, providing the Clarifications involve no change in the Contract Price or the Contract Time.

B. The ENGINEER shall have the right to approve and issue Clarifications setting forth written orders, instructions, or interpretations concerning the Contract Documents or its performance, provided such Clarifications involve no change in the Contract Price or the

Contract Time.

10.3 Change Orders:

A. Changes in the quantity or character of the Work within the scope of the Project which are not properly the subject of Clarifications, including all changes resulting in changes in the Contract Price or the Contract Time, shall be authorized only by or Change Orders approved in advance and issued in accordance with the provisions of the CITY Procurement Code, as amended from time to time.

B. CONTRACTOR shall not start work on any changes requiring an increase in the Contract Price or the Contract Time until a Change Order setting forth the adjustments is approved by the CITY. Upon receipt of a Change Order CONTRACTOR shall promptly proceed with the work set forth within the document.

C. Change Orders shall be issued for change in Contract Price related to Cost Allowances specifically included on the Proposal Bid Form. Change Orders shall be issued when required for all other Contract Price Changes. Hereinafter, the term “Change Order(s)” shall be used to include “Change Orders” with the exception that Change Order shall not be used for any Contract Time adjustments.

D. In the event satisfactory adjustment cannot be reached for any item requiring a change in the Contract Price or Contract Time, and a Change Order has not been issued, CITY reserves the right at its sole option to either terminate the Contract as it applies to the items in question and make such arrangements as may be deemed necessary to complete the disputed work; or the work shall be performed on the “cost of work” basis as described in Article 10.4.

E. On approval of any Contract change increasing the Contract Price, CONTRACTOR shall ensure that the performance bond and payment bond are increased so that each reflects the total Contract Price as increased.

F. Under circumstances determined necessary by CITY, Change Orders may be issued unilaterally by CITY.

10.4 Value of Change Order Work:

A. The value of any work covered by a Change Order or of any claim for an increase or decrease in the Contract Price shall be determined in one of the following ways:

A.1 Where the work involved is covered by unit prices contained in the Contract Documents, by application of unit prices to the quantities of items involved, subject to the provisions of Article 10.4.G.

A.2 By mutual acceptance of a lump sum which CONTRACTOR and CITY acknowledge contains a component for overhead and profit.

A.3 On the basis of the "cost of work," determined as provided in this Article, plus a CONTRACTOR's fee for overhead and profit which is determined as provided in Article 10.4.D.

B. The term "cost of work" means the sum of all direct costs necessarily incurred and paid by CONTRACTOR in the proper performance of the Work described in the Change Order.

Except as otherwise may be agreed to in writing by CITY, such costs shall be in amounts no higher than those prevailing in the locality of the Project, shall include only the following items and shall not include any of the costs itemized in Article 10.4.C.

B.1 Payroll costs for employees in the direct employ of CONTRACTOR in the performance of the work described in the Change Order under schedules of job classifications agreed upon by CITY and CONTRACTOR. Payroll costs for employees not employed full time on the work covered by the Change Order shall be apportioned on the basis of their time spent on the work. Payroll costs shall include, but not be limited to, salaries and wages plus the cost of fringe benefits which shall include social security contributions, unemployment, excise and payroll taxes, workers' or workmen's compensation, health and retirement benefits, bonuses, sick leave, vacation and holiday pay application thereto. Such employees shall include superintendents and foremen at the site. The expenses of performing the work after regular working hours, on Sunday or legal holidays shall be included in the above to the extent authorized by CITY.

B.2 Cost of all materials and equipment furnished and incorporated in the work, including costs of transportation and storage thereof, and manufacturers' field services required in connection therewith. All cash discounts shall accrue to CONTRACTOR unless CITY deposits funds with CONTRACTOR with which to make payments, in which case the cash discounts shall accrue to CITY. All trade discounts, rebates and refunds, and all returns from sale of surplus materials and equipment shall accrue to CITY and CONTRACTOR shall make provisions so that they may be obtained. Rentals of all construction equipment and machinery and the parts thereof whether rented from CONTRACTOR or others in accordance with rental agreements approved by CITY with the advice of ENGINEER and the costs of transportation, loading, unloading, installation, dismantling and removal thereof, all in accordance with the terms of said agreements. The rental of any such equipment, machinery or parts shall cease when the use thereof is no longer necessary for the work.

B.3 Payments made by CONTRACTOR to Subcontractors for work performed by Subcontractors, If required by CITY, CONTRACTOR shall obtain competitive bids from Subcontractors acceptable to CONTRACTOR and shall deliver such bids to CITY who will then determine, with the advice of ENGINEER, which bids will be accepted. If the Subcontract provides that the Subcontractor is to be paid on the basis of cost of the work plus a fee, the Subcontractor's cost of the work shall be determined in the same manner as CONTRACTOR'S cost of the work. All Subcontractors shall be subject to the other provisions of the Contract Documents insofar as applicable.

B.4 Cost of special engineers, including, but not limited to, engineers, architects, testing laboratories, and surveyors employed for services specifically related to the performance of the work described in the Change Order.

B.5 Supplemental costs including the following:

The proportion of necessary transportation, travel and subsistence expenses of CONTRACTOR's employees incurred in discharge of duties connected with the work except for local travel to and from the site of the work.

Cost, including transportation and maintenance, of all materials, supplies,

equipment, machinery, appliances, office and temporary facilities at the site and hand tools not owned by the workmen, which are consumed in the performance of the work, and cost less market value of such items used but not consumed which remains the property of CONTRACTOR.

Sales, use, or similar taxes related to the work, and for which CONTRACTOR is liable, imposed by any governmental authority. Deposits lost for causes other than CONTRACTOR's negligence; royalty payments and fees for permits and licenses. The cost of utilities, fuel and sanitary facilities at the site. Receipted minor expenses such as telegrams, long distance telephone calls, telephone service at the site, expressage and similar petty cash items in connection with the work.

Cost of premiums for additional bonds and insurance required because of changes in the work.

C. The term "cost of the work" shall not include any of the following:

C.1 Payroll costs and other compensation of CONTRACTOR's officers, executives, principals (of partnership and sole proprietorships), general managers, engineers, architects, estimators, lawyers, auditors, accountants, purchasing and contracting agents, expediters, timekeepers, clerks and other personnel employed by CONTRACTOR whether at the site or in its principal or a branch office for general administration of the work and not specifically included in the agreed-upon schedule of job classifications referred to in this Article, all of which are to be considered administrative costs covered by CONTRACTOR's fee.

C.2 Expenses of CONTRACTOR's principal and branch offices other than CONTRACTOR's office at the site.

C.3 Any part of CONTRACTOR's capital expenses, including interest on CONTRACTOR's capital employed for the work and charges against CONTRACTOR for delinquent payments.

C.4 Cost of premiums for all Bonds and for all insurance whether or not CONTRACTOR is required by the Contract Documents to purchase and maintain the same, except for additional bonds and insurance required because of changes in the work.

C.5 Costs due to the negligence or neglect of CONTRACTOR, any Subcontractors, or anyone directly or indirectly employed by any of them or for whose acts any of them may be liable, including but not limited to, the correction of defective work, disposal of materials or equipment wrongly supplied and making good any damage to property.

C.6 Other overhead or general expense costs of any kind and the cost of any item not specifically and expressly included in this Section.

D. CONTRACTOR's fee allowed to CONTRACTOR for overhead and profit shall be determined as follows:

D.1 A mutually acceptable fixed fee or if none can be agreed upon,

D.2 A fee based on the following percentages of the various portions of the cost of the work:

For costs incurred under Article 10.4.B.1, CONTRACTOR's fee shall not exceed ten percent (10%).

For costs incurred under Article 10.4.B.3 and B.4, CONTRACTOR's fee shall not exceed seven and one half percent (7.5%); and if a subcontract is on the basis of cost of the work plus a fee, the maximum allowable to the Subcontractor as a fee for overhead and profit shall not exceed ten percent (10%);

No fee shall be payable on the basis of costs itemized under Article 10.4.B.5 and Article 10.4.C.

E. The amount of credit to be allowed by CONTRACTOR to CITY for any such change which results in a net decrease in cost, will be the amount of the actual net decrease. When both additions and credits are involved in anyone change, the combined overhead and profit shall be figured on the basis of the net increase, if any, however, CONTRACTOR shall not be entitled to claim lost profits for any Work not performed.

F. Whenever the cost of any work is to be determined pursuant to Articles 10.4.B and 10.4.C, CONTRACTOR will submit in a form acceptable to CONSUL T ANT an itemized cost breakdown together with the supporting data.

G. Where the quantity of any item of the Work that is covered by a unit price is increased or decreased by more than twenty percent (20%) from the quantity of such work indicated in the Contract Documents, an appropriate Change Order shall be issued to adjust the unit price, if warranted.

H. Whenever a change in the Work is to be based on mutual acceptance of a lump sum, whether the amount is an addition, credit or no change-in-cost, CONTRACTOR shall submit an initial cost estimate acceptable to ENGINEER and CITY.

H.1 Breakdown shall list the quantities and unit prices for materials, labor, equipment and other items of cost.

H.2 Whenever a change involves CONTRACTOR and one or more Subcontractors and the change is an increase in the Contract Price, overhead and profit percentage for CONTRACTOR and each Subcontractor shall be itemized separately.

I. Each Change Order must state within the body of the Change Order whether it is based upon unit price, negotiated lump sum, or "cost of the work."

10.5 Notification and Claim for Chance of Contract Price:

A. Any claim for a change in the Contract Price shall be made by written notice by CONTRACTOR to the CITY and to ENGINEER within five (5) calendar days of the commencement of the event giving rise to the claim and stating the general nature and cause of the claim. Thereafter, within twenty (20) calendar days of the termination of the event giving rise to the claim, written notice of the extent of the claim with supporting information and documentation shall be provided unless ENGINEER allows an additional period of time to ascertain more accurate data in

support of the claim and such notice shall be accompanied by CONTRACTOR's written notarized statement that the adjustment claimed is the entire adjustment to which the CONTRACTOR has reason to believe it is entitled as a result of the occurrence of said event. All claims for changes in the Contract Price shall be in accordance with Articles 10.3 and 10.4 hereof, if CITY and CONTRACTOR cannot otherwise agree. **IT IS EXPRESSLY AND SPECIFICALLY AGREED THAT ANY AND ALL CLAIMS FOR CHANGES TO THE CONTRACT PRICE SHALL BE WAIVED IF NOT SUBMITTED IN STRICT ACCORDANCE WITH THE REQUIREMENTS OF THIS SECTION.**

10.6 Notice of Change:

If notice of any change affecting the general scope of the work or change in the Contract Price is required by the provisions of any Bond to be given to the Surety, it will be CONTRACTOR's responsibility to so notify the Surety, and the amount of each applicable Bond shall be adjusted accordingly. The CONTRACTOR shall furnish proof of such adjustment to the CITY. Failure of the CONTRACTOR to obtain such approval from the Surety may be a basis for termination of this Contract by the CITY.

10.7 Records:

The CONTRACTOR's representative and the ENGINEER shall compare records of extra work done at the end of the day. Such records shall be made in duplicate upon a form provided for such purpose by the ENGINEER and shall be signed by both the Inspector and the CONTRACTOR's representative, one copy being submitted to the ENGINEER and the other being retained by the CONTRACTOR.

10.8 Cancelled Items and Payments Therefore:

The CITY COMMISSION shall have the right to cancel those portions of the Contract relating to the construction of any item provided therein. Such cancellation shall entitle the CONTRACTOR to payment in a fair and equitable amount covering all items of cost incurred by him prior to the date of cancellation or suspension of the work. The CONTRACTOR shall be allowed a profit percentage on the materials used and on construction work actually performed, at the same rates as provided for "Extra Work", but no allowance will be made for anticipated profits. Acceptable materials ordered by the CONTRACTOR or delivered on the work, prior to date of such cancellation or suspension, may be purchased from the CONTRACTOR by the CITY at actual cost and shall thereupon, become property of the CITY, or may be returned to the manufacturer for a reasonable restocking charge.

10.9 Full Payment:

The Compensation herein provided shall be received and accepted by the CONTRACTOR as payment in full for all extra work done or costs incurred in event of cancellation.

ARTICLE 11 - CHANGES IN THE CONTRACT TIME

11.1 Change Order:

The Contract Time may only be changed by a Change Order. A FULLY EXECUTED CHANGE ORDER MUST EXIST PRIOR TO EXTENSION OR SHORTENING OF THE CONTRACT TIME.

11.2 Notification and Claim for Change of Contract Time:

A. Any claim for a change in the Contract Time shall be made by written notice by the CONTRACTOR to the CITY and to ENGINEER within five (5) calendar days of the commencement of the event giving rise to the claim and stating the general nature and cause of the claim. Thereafter within twenty (20) calendar days of the termination of the event giving rise to the claim, written notice of the extent of the claim with supporting information and documentation shall be provided unless ENGINEER allows an additional period of time to ascertain more accurate data in support of the claim and such notice shall be accompanied by CONTRACTOR's written notarized statement that the adjustment claimed is the entire adjustment to which the CONTRACTOR has reason to believe it is entitled as a result of the occurrence of said event. All claims for changes in the Contract Time shall be determined in accordance with Articles 10.3 and 10.4 hereof, if CITY and CONTRACTOR cannot otherwise agree. **IT IS EXPRESSLY AND SPECIFICALLY AGREED THAT ANY AND ALL CLAIMS FOR CHANGES TO THE CONTRACT TIME SHALL BE WAIVED IF NOT SUBMITTED IN STRICT ACCORDANCE WITH THE REQUIREMENTS OF THIS SECTION.**

B. The Contract Time will be extended an amount equal to time lost on critical Work items due to delays beyond the control of and through no fault or negligence of CONTRACTOR if a claim is made thereafter as provided in Article 11.2. Such delays shall include, but not be limited to, acts or neglect by any separate contractor employed by CITY, fire, floods, labor disputes, epidemics, abnormal weather conditions or acts of God

11.3 Basis for Extension:

Extensions of time shall be considered and will be based solely upon the effect of delays to the work as a whole. Extensions of time shall not be granted for delays to the work, unless the CONTRACTOR can clearly demonstrate, through schedule analysis, that the delay to the work as a whole arose in accordance with Article 12.3 or Article 15.1, and that such delays did or will, in fact, delay the progress of work as a whole. Time extensions shall not be allowed for delays to parts of the work that are not on the critical path of the project schedule. Time extensions shall not be granted until all float or contingency time, at the time of the delay, available to absorb specific delays and associated impacts is used.

11.4 Change of Time Due to Contract Execution Problems:

Refer to Article 3.4 for a decrease in Contract Time when the CONTRACTOR fails to return the correctly executed Contract Documents within the time allowed.

11.5 Change of Time Due to Change Order Evaluation:

When evaluating a proposed Change Order, the ENGINEER shall have access to any available float or contingency time. Extension will only be considered in accordance with Article 11.3.

11.6 Change of Time and Inspection and Testing:

Neither observations by the ENGINEER, nor inspections, tests or approvals by others, passing or failing, will be cause for consideration of time extension.

11.7 Change of Time and Defective Work:

A. If WORK is found to be defective, CONTRACTOR shall bear all remedial expenses including any additional costs experienced by CITY due to delays to others performing additional WORK. CONTRACTOR shall further bear the responsibility for maintaining schedule, and will be excluded from a time extension and the recovery of delay damages due to the uncovering.

B. If the WORK is found to be defective per the Specifications, but the CITY chooses to accept it at its sole discretion, CONTRACTOR shall bear the responsibility for maintaining schedule, and will be excluded from a time extension and the recovery of delay damages due to the uncovering.

11.8 Liquidated Damages:

All time limits stated in the Contract Documents are of the essence. The provisions of this Article 11 shall not exclude recovery for damages by CITY as indicated in Section 3 of the Supplementary General Conditions.

ARTICLE 12 - WARRANTY AND GUARANTEE; TEST AND INSPECTIONS; CORRECTION, REMOVAL OR ACCEPTANCE OF DEFECTIVE WORK

12.1 Warranty and Guarantee:

The CONTRACTOR warrants and guarantees to the CITY and the ENGINEER that all work will be in accordance with the Contract Documents and will not be defective. Prompt notice of all defects shall be given to the CONTRACTOR. All defective work, whether or not in place, may be rejected, corrected or accepted as provided in this Article.

12.2 Tests and Inspections:

A. The CONTRACTOR shall give the ENGINEER and, when appropriate, the Building Department and other regulatory authorities which have jurisdiction over the work, timely notice of readiness of the work for all required inspections, tests or approvals.

B. All inspections performed as a result of the issuance of the Master Building Permit shall be performed by the CITY. All costs associated with such inspections shall be paid by the CITY, EXCEPT THAT should said test or inspection fail to pass the CONTRACTOR shall pay all costs associated with the rework and the retesting.

C. When any other regulatory authority, by virtue of its rules or regulations, requires specific tests or inspections, the CONTRACTOR shall assume full responsibility for and pay all costs in connection with said tests and inspections.

D. The CONTRACTOR shall also be responsible for and shall pay all costs in connection with any inspection or testing required in connection with the ENGINEER's acceptance of a manufacturer, fabricator, supplier or distributor of materials or equipment proposed to be

incorporated in the work, or of materials or equipment submitted for approval prior to ENGINEER's acceptance thereof for incorporation in the work and as otherwise specified in the Contract Documents.

E. Neither observations by the ENGINEER nor inspections, tests or approvals by others shall relieve the CONTRACTOR from his obligations to perform the work in accordance with the Contract Documents.

12.3 Uncovering Work:

A. If any work that is to be inspected, tested or approved is covered without written concurrence of the ENGINEER, it must, if requested, by the ENGINEER, be uncovered. Such uncovering and replacement shall be at the CONTRACTOR's expense.

B. CONTRACTOR must contact all regulatory agencies issuing construction permits to make all necessary inspections. If CONTRACTOR fails to have the necessary inspections performed and such failure results in uncovering of work already performed, CONTRACTOR shall be responsible for all related time delays and monetary costs.

C. If the ENGINEER considers it necessary or advisable that work previously covered with his permission or cognizance be observed, inspected or tested, the CONTRACTOR, at the ENGINEER's request, shall uncover, expose or otherwise make available for observation, inspection or testing as the ENGINEER may require, that portion of the work in question, furnishing all necessary labor, material and equipment. If it is found that such work is defective, the CONTRACTOR shall bear all the expenses of such uncovering, exposure, observation, inspection and testing and of satisfactory reconstruction, including compensation for additional professional services. If, however, such work is not found to be defective the CONTRACTOR shall be allowed an increase in the Contract Price or an extension of the Contract Time, or both, directly attributable to such uncovering, exposure, observation, inspection, testing and reconstruction if he makes a claim therefor in accordance with Article 10.2 and Article 11.2.

12.4 City May Stop the Work:

If the work is defective, or the CONTRACTOR fails to supply sufficient skilled workmen or suitable materials or equipment, the CITY may order the CONTRACTOR to stop the work, or any portion thereof, until the cause for such order has been eliminated; however, this right of the CITY to stop the work shall not give rise to any duty on the part of the CITY to exercise this right for the benefit of the CONTRACTOR or any other party.

12.5 Correction or Removal of Defective Work:

If required by the ENGINEER, the CONTRACTOR shall promptly, without cost to the CITY and as specified by the ENGINEER either correct any defective work, whether or not fabricated, installed or completed, or if the work has been rejected by the ENGINEER, remove it from the site and replace it with nondefective work.

12.6 One- Year Correction Period:

If within one year after the date of Substantial Completion or Final Completion as applicable, or such longer period of time as may be prescribed by the terms of any applicable special guarantee required by the Contract Documents or by any specific provision of the Contract Documents, any work is found to be defective, the CONTRACTOR shall promptly without cost to the CITY and in accordance with the ENGINEER's written instructions, either correct such defective work, or if it

has been rejected by the ENGINEER remove it from the site and replace it with nondefective work. If the CONTRACTOR does not promptly comply with the terms of such instructions, or in an emergency where delay would cause serious risk of loss or damage, the ENGINEER may have the defective work corrected or the rejected work removed and replaced, and all direct and indirect costs of such removal and replacement, including compensation for additional professional services, shall be paid by the CONTRACTOR.

12.7 Acceptance of Defective Work:

If instead of requiring correction or removal and replacement of defective work, the ENGINEER prefers to accept it, he may do so. In such case, if acceptance occurs prior to the ENGINEER's recommendation of final payment, a Change Order shall be issued incorporating the necessary revisions in the Contract Documents, including appropriate reduction in the Contract Price; or if the acceptance occurs after such recommendation, an appropriate amount shall be paid by the CONTRACTOR to the CITY.

12.8 City May Correct Defective Work:

If the CONTRACTOR fails within a reasonable time after written notice of the ENGINEER to proceed to correct and to correct defective work or to remove and replace rejected work as required by the ENGINEER in accordance with Paragraph 12.5, or if the CONTRACTOR fails to perform the work in accordance with the Contract Documents, (including any requirements of the progress schedule), the CITY may, after seven days' written notice to the CONTRACTOR, correct and remedy any such deficiency. In exercising its rights under this Paragraph the CITY shall proceed expeditiously. To the extent necessary to complete corrective and remedial action, the CITY may exclude the CONTRACTOR from all or part of the site, take possession of all or part of the work, and suspend the CONTRACTOR's services related thereto, take possession of the CONTRACTOR's tools, appliances, construction equipment and machinery at the site and incorporate in the work all materials and equipment stored at the site or for which the CITY has paid the CONTRACTOR but which are stored elsewhere. The CONTRACTOR shall allow the CITY, the CITY's representatives, agents and employees such access to the site as may be necessary to enable the CITY to exercise his rights under this Paragraph. All direct and indirect costs of the CITY in exercising such rights shall be charged against the CONTRACTOR in an amount verified by the ENGINEER, and a Change Order shall be issued incorporating the necessary revisions in the Contract Documents and a reduction in the Contract Price. Such direct and indirect costs shall include, in particular but without limitations, compensation for additional professional services required and all costs of repair and replacement of work of others destroyed or damaged by correction, removal or replacement of the CONTRACTOR's defective work. The CONTRACTOR shall not be allowed an extension of the Contract Time because of any delay in performance of the work attributable to the exercise by the CITY of the CITY's rights hereunder.

ARTICLE 13 - PAYMENTS TO THE CONTRACTOR

13.1 Basis of Payment:

Progress payments shall be based on the aggregate of the unit price amounts listed in the Proposal or in the Schedule of Values which have been incorporated in the work acceptable to the ENGINEER.

13.2 Unit Price Inclusion:

The unit prices stated in the Proposal include all costs and expenses for materials, labor, tools, equipment, transportation, commissions, patent fees and royalties, removing crossings or other obstructions, protection or maintaining pipes, drains, railroad tracks, buildings, bridges, or other

structures furnishing temporary crossings or bridges, furnishing all supplemental construction stakes, batter boards, templets, common and ordinary labor for handling materials during inspection replacing any property damage, together with any and all costs or expenses for performing and completing the work as specified.

13.3 Schedule of Values: (Lump Sum Price Breakdown)

A Schedule of Values must be submitted within seven days subsequent to the CONTRACTOR executing and submitting the Documents required of Article 16 of the Instructions to Bidders. The schedules shall be satisfactory in form and substance to the ENGINEER, and shall include quantity and unit prices aggregating the Contract Price, and shall subdivide the work into component parts in sufficient detail to serve as the basis for progress payments during construction. Upon acceptance of the schedule of values by the ENGINEER, it shall be incorporated into a form of Application for Payment acceptable to the ENGINEER.

13.4 Changed Conditions: (Unit Price Only)

It is mutually agreed that due to latent field conditions which cannot be foreseen at the time of advertising for bids, adjustments of the Plans to field conditions will be necessary during construction; and, therefore, such changes in the plans shall be recognized as constituting a normal and accepted margin of adjustment not unusual and not involving or permitting any change or modification of unit prices, in which case payment will be made for the revised quantities at the unit price bid in the Proposal.

13.5 Application for Progress Payment:

On the 20th day of the month or the first working day thereafter, the CONTRACTOR shall submit to the ENGINEER for review an Application for Payment form filled out and signed by the CONTRACTOR. The form shall be notarized, and shall cover the work completed as of the date of the application. The Application for Payment shall be accompanied by a Schedule of Values, and any other supporting documentation as the ENGINEER may reasonably require.

13.6 Payment for Materials:

If payment is requested on the basis of materials and equipment not incorporated in the work but delivered and suitably stored at the site or at another location agreed to in writing, the Application for Payment shall also be accompanied by such data, satisfactory to the ENGINEER, as will establish the CITY's title to the material and equipment and protect the CITY's interest therein, including applicable insurance.

13.7 Affidavit Required:

All Applications for Payment shall include an Affidavit of the CONTRACTOR stating that all previous progress payments received on account of the work have been applied to discharge in full all of CONTRACTOR's obligations reflected in prior Applications for Payment. The amount of retainage with respect to progress payments will be 5%.

13.8 Retainage:

The amount of retainage with respect to progress payments will be 5% completion of the construction services purchased pursuant to the Contract.

13.9 CONTRACTOR's Warranty of Title:

The CONTRACTOR warrants and guarantees that title to all work, materials and equipment covered by any Application for Payment whether incorporated in the Project or not, will pass to the CITY at the time of payment free and clear of all liens, claims, security interests and encumbrances (hereinafter in these General Conditions referred to as "Liens").

13.10 Review of Application for Payment:

The ENGINEER will, within seven (7) days, review the Application for Payment and either approve and submit it for payment or notify the CONTRACTOR of the deficiencies such that the CONTRACTOR may make the necessary corrections and resubmit in time for the month's payment. However, the ENGINEER may refuse to recommend the whole or any part of any payment if, in his opinion, it would be incorrect to make such representations. He may also refuse to recommend any such payment, or because of subsequently discovered evidence or the results of subsequent inspections or tests, nullify any such payment previously recommended to such extent as may be necessary in the ENGINEER's opinion to protect the CITY from loss because:

A. The work is defective, or completed work has been damaged requiring correction or replacement.

B. Written claims have been made against the CITY or Liens have been filed in connection with the work.

C. The Contract Price has been reduced because of Change Order.

D. The CITY has been required to correct defective work or complete the work in accordance with Article 12.8.

E. The CONTRACTOR's unsatisfactory prosecution of the work in accordance with the Contract Documents.

F. The CONTRACTOR's failure to make payment to Sub- Contractors, or for labor, materials or equipment.

13.11 Payment to the Contractor:

Payments are made only on the fifteenth day or first workday thereafter of each month.

ARTICLE 14 - SUBSTANTIAL COMPLETION, PARTIAL UTILIZATION, FINAL CLEAN UP, INSPECTION, PAYMENT AND ACCEPTANCE

14.1 Substantial Completion:

When the CONTRACTOR considers the entire work ready for its intended use, the CONTRACTOR shall, in writing to the ENGINEER, certify that the entire work is substantially complete and request that the ENGINEER issue a Certificate of Substantial Completion. Within a reasonable time thereafter the CONTRACTOR and the ENGINEER shall make an inspection of the work to determine the status of completion. If the ENGINEER does not consider the work substantially complete, the ENGINEER will notify the CONTRACTOR in writing giving his reasons therefor. If the ENGINEER considers the work substantially complete, the ENGINEER will prepare and deliver to the CONTRACTOR a Certificate of Substantial Completion, which shall fix the date of Substantial Completion. There shall be attached to the certificate a proposed Punch List, developed by the CONTRACTOR, of items to be completed or corrected before final payment.

Within 10 days after delivery of the certificate, the CITY shall review the proposed Punch List and either approve it or contact the CONTRACTOR to commence good faith efforts to develop a Punch List that is satisfactory to both parties. If the parties are unable to resolve any differences they may have in the development of the Punch List, the ENGINEER shall resolve their differences. The parties shall expedite the process of developing the Punch List with the intent of finalizing the Punch List within 30 days after the date of Substantial Completion.

At the time of delivery of the Certificate of Substantial Completion the ENGINEER will deliver to the CONTRACTOR written notice as to division of responsibilities pending final payment between the CITY and the CONTRACTOR with respect to security, operation, safety, maintenance, heat, utilities and insurance, said responsibilities will be binding on the CITY and the CONTRACTOR until final payment. Unless otherwise stated herein or on the Certificate of Substantial Completion, all building, product, equipment, and machinery warranties will commence on the date of Substantial Completion. The CITY shall have the right to exclude the CONTRACTOR from the work after the date of Substantial Completion, but the CITY shall allow the CONTRACTOR reasonable access to complete or correct items on the Punch List.

14.2 Partial Utilization:

Use by the CITY of any finished part of the work which has specifically been identified in the Contract Documents or which the ENGINEER and the CONTRACTOR agree constitutes a separately functioning and usable part of the work that can be used by the CITY without significant interference with CONTRACTOR's performance of the remainder of the work, may be accomplished prior to Substantial Completion of all the work subject to the following:

A. The ENGINEER at any time may request the CONTRACTOR in writing to permit the CITY to use any such part of the work which the ENGINEER believes to be ready for its intended use and substantially complete. If the CONTRACTOR agrees, the CONTRACTOR will certify to the ENGINEER that said part of the work is substantially complete and request the ENGINEER to issue a Certificate of Substantial Completion for that part of the work. The CONTRACTOR, at any time, may notify the ENGINEER in writing that the CONTRACTOR considers any such part of the work ready for its intended use and substantially complete and request the ENGINEER to issue a Certificate of Substantial Complete for the part of the work. Within a reasonable time after either such request, the CONTRACTOR and the ENGINEER shall make an inspection of that part of the work to determine its status of completion. If the ENGINEER does not consider that part of the work to be substantially complete, the ENGINEER will notify the CONTRACTOR in writing giving the reasons therefore. If the ENGINEER considers that part of the work to be substantially complete, the provisions of Article 14.1 will apply with respect to Certificate of Substantial Completion of

that part of the work and the division of responsibility in respect thereof and access thereto. It shall be understood by the CONTRACTOR that until such written notification is issued, all responsibility for care and maintenance of all of the WORK shall be borne by the CONTRACTOR. Upon issuance of said written notice of partial utilization, the OWNER will accept responsibility for the protection and maintenance of all such items or portions of the WORK described in the written notice.

14.3 Final Clean-Up:

Upon completion of the work and before final inspection shall be made, the CONTRACTOR shall clean and remove from the site, the Right-of-Way and adjacent property, all surplus and discarded materials, rubbish, and temporary structures; restore in an acceptable manner all property, both public and private, which has been damaged during the prosecution of the work; and shall leave the site and vicinity unobstructed in a neat and presentable condition throughout the entire area or length of the work under Contract. The placing of materials of every character, rubbish, or equipment on the abutting property, with or without the consent of the property owners, shall not constitute the satisfactory disposal. If the work is of such a character as may be done by block or sections, the CONTRACTOR may be required to promptly remove and dispose of accumulated rubbish, debris or surplus materials from blocks or sections as completed or partially completed. No separate payment will be made for final cleaning up and restoration of property, but all costs thereof shall be included in the prices bid for the various scheduled items of work.

14.4 Final Inspection:

Upon written notice from the CONTRACTOR that the entire work or an agreed portion thereof is complete and final clean-up has been completed, the ENGINEER will make a final inspection with the CONTRACTOR and will notify the CONTRACTOR in writing of all particulars in which this inspection reveals that the work is incomplete or defective. The CONTRACTOR shall immediately take such measures as are necessary to remedy such deficiencies.

14.5 Final Application for Payment:

After the CONTRACTOR has completed all such corrections to the satisfaction of the ENGINEER and delivered all maintenance and operating instructions, schedules, guarantees, Bonds, certificates of inspection, marked-up record documents (as provided in Article 7.19 of the General Conditions and other documents; all as required by the Contract Documents and after the ENGINEER has indicated that the work is acceptable (subject to the provisions of Article 14.9) the CONTRACTOR may make Application for Final Payment following the procedure for progress payments. The final Application for Payment shall be accompanied by all documentation called for in the Contract Documents, together with complete and legally effective releases or waivers (satisfactory to the CITY) of all Liens arising out of or filed in connection with the work. In lieu thereof and as approved by the CITY, the CONTRACTOR may furnish receipts or releases in full; an affidavit of the CONTRACTOR that the releases and receipts include all labor, services, material and equipment for which a Lien could be filed, and that all payrolls, material and equipment bills, and other indebtedness connected with the work for which the CITY or the CITY's property might in any way be responsible, have been paid or otherwise satisfied; and consent of the Surety, if any, to final payment. If any Subcontractor or Supplier fails to furnish a release or receipt in full, the CONTRACTOR may furnish a Bond or other collateral satisfactory to the CITY to indemnify the CITY against any Lien.

14.6 Final Payment and Acceptance:

If on the basis of the ENGINEER's observation of the work during construction and final inspection, and the ENGINEER's review of the final Application for Payment and accompanying documentation, all as required by the Contract Documents, the ENGINEER is satisfied that the

work has been completed and the CONTRACTOR's other obligations under the Contract Documents have been fulfilled, the ENGINEER will recommend payment. Thereupon the ENGINEER will give written notice to the CITY and the CONTRACTOR that the work is acceptable subject to the provisions of Article 14.9.

14.7 Payment of Retainage Without Final Completion:

If through no fault of the CONTRACTOR, final completion of the work is significantly delayed and if the ENGINEER so confirms, the CITY shall, upon receipt of the CONTRACTOR's final Application for Payment and recommendation of the ENGINEER, and without terminating the Agreement, make payment of the balance due for the portion of the work fully completed and accepted. If the remaining balance to be held by the CITY for work not fully completed or corrected is less than the retainage stipulated in the Agreement and if Bonds have been furnished as required in Article 5.2, the written consent of the Surety to the payment of the balance due for that portion of the work fully completed and accepted shall be submitted by the CONTRACTOR to the ENGINEER with the application for such payment. Such payment shall be made under the terms and conditions governing final payment, except that it shall not constitute a waiver of claims.

14.8 CONTRACTOR's Continuing Obligation:

The CONTRACTOR's obligation to perform and complete the work in accordance with the Contract Documents shall be absolute. Neither recommendation of any progress or final payment by the ENGINEER, nor the issuance of a Certificate of Substantial Completion, nor any payment by the CITY to the CONTRACTOR under the Contract Documents, nor any use or occupancy of the work or any part thereof by the CITY nor any act of acceptance by the CITY nor any failure to do so, nor any review and approval of a Shop Drawing or sample submission, nor the issuance of a notice of acceptability by the ENGINEER pursuant to Article 14.6, nor any correction of defective work by the CITY will constitute an acceptance of work not in accordance with the Contract Documents or a release of the CONTRACTOR's obligation to perform the work in accordance with the Contract Documents (except as provided in Article 14.9).

14.9 Waiver of Claims:

The making and acceptance of final payment will constitute:

A. A waiver of all claims by the CITY against the CONTRACTOR, except claims arising from unsettled Liens, from defective work appearing after final inspection pursuant to Article 14.4 or from failure to comply with the Contract Documents or the terms of any special guarantees specified therein; however, it will not constitute a waiver by the CITY of any rights in respect of the CONTRACTOR's continuing obligations under the Contract Documents.

B. A waiver of all claims by the CONTRACTOR against the CITY other than those previously made in writing and still unsettled.

ARTICLE 15 - SUSPENSION OF WORK AND TERMINATION

15.1 City May Suspend Work:

The CITY may, at any time and without cause, suspend the work or any portion thereof for a period of not more than 90 days by notice in writing to the CONTRACTOR which will fix the date on which work will be resumed. The CONTRACTOR shall resume the work on the date so fixed. The CONTRACTOR shall be allowed an increase in the Contract Price or an extension of the Contract

Time, or both, directly attributable to any suspension.

15.2 City May Terminate:

A. Upon the occurrence of any one or more of the following events:

1. If the CONTRACTOR commences a voluntary case under any chapter of the Bankruptcy Code (Title 11, United States Code), as now or hereafter in effect, or if the CONTRACTOR takes any equivalent or similar action by filing a petition or otherwise under any other federal or state law in effect at such time relating to the bankruptcy or insolvency.

2. If a petition is filed against the CONTRACTOR under any chapter of the Bankruptcy Code as now or hereafter in effect at the time of filing, or if a petition is filed seeking any such equivalent or similar relief against the CONTRACTOR under any other federal or state law in effect at the time relating to bankruptcy or insolvency.

3. If the CONTRACTOR makes a general assignment for the benefit of creditors.

4. If a trustee, receiver, custodian or agent of the CONTRACTOR is appointed under applicable law or under contract, whose appointment or authority to take charge of property of the CONTRACTOR is for the purpose of enforcing a Lien against such property or for the purpose of general administration of such property for the benefit of the CONTRACTOR's creditors.

5. If the CONTRACTOR admits in writing an inability to pay its debts generally as they become due.

6. If the CONTRACTOR persistently fails to perform the work in accordance with the Contract Documents (including, but not limited to, failure to supply a qualified superintendent or sufficient skilled workers or suitable materials or equipment or failure to adhere to the approved progress schedule revised from time to time).

7. If the CONTRACTOR disregards laws or regulations of any public body having jurisdiction.

8. If the CONTRACTOR disregards the authority of the ENGINEER.

9. If the CONTRACTOR otherwise violates in any substantial way any provisions of the Contract Documents.

B. The CITY may, after giving the CONTRACTOR and the Surety seven days' written notice and to the extent permitted by laws and regulations, terminate the services of the CONTRACTOR, exclude the CONTRACTOR from the site and take possession of the work and of all the CONTRACTOR's tools, appliances, construction equipment and machinery at the site and use the same to the full extent they could be used by the CONTRACTOR (without liability to the CONTRACTOR for trespass or conversion), incorporate in the work all materials and equipment stored at the site or for which the CITY has paid the CONTRACTOR but which are stored elsewhere, and finish the work as the CITY may deem expedient. In such case the CONTRACTOR shall not be entitled to receive any further payment until the work is finished. If the unpaid balance of the Contract Price exceeds the direct, indirect and consequential costs of completing the work (including but not limited to fees and charges of engineers, architects, attorneys and other professionals, and court and arbitration costs) such excess will be paid to the CONTRACTOR. If such costs exceed such unpaid balance, the CONTRACTOR, or CONTRACTOR's Surety, shall pay the difference to the CITY.

C. Where the CONTRACTOR's services have been so terminated by the CITY, the CITY alone shall determine the scope and description of the work to be completed and the method and schedule for completing it.

D. Where the CONTRACTOR's services have been so terminated by the CITY the termination will not affect any rights or remedies of the CITY against the CONTRACTOR then existing or which may thereafter accrue. Any retention or payment of moneys due the CONTRACTOR by the CITY will not release the CONTRACTOR from liability.

E. Upon seven days' written notice to the CONTRACTOR the CITY may, without cause and without prejudice to any other right or remedy, elect to abandon the work and terminate the Contract. In such case the CONTRACTOR shall be paid for all work executed and any expense sustained plus reasonable termination expenses, which will include, but not be limited to, direct, indirect and consequential costs (including, but not limited to, fees and charges of engineers, architects, attorneys and other professionals and court and arbitration costs).

15.3 Contractor May Stop Work or Terminate:

If through no act or fault of the CONTRACTOR, the work is suspended for a period of more than 90 days by the CITY or under an order of court or other public authority, or the CITY fails for 60 days to pay the CONTRACTOR any sum finally determined to be due, then the CONTRACTOR may, upon seven days' written notice to the CITY terminate the Contract and recover from the CITY payment for all work executed and any expense sustained plus reasonable termination expenses. In addition and in lieu of terminating the Contract, if the CITY has failed to make any payment as aforesaid, the CONTRACTOR may upon seven days' written notice to the CITY stop the work until payment of all amounts then due are paid. The provisions of this paragraph shall not relieve the CONTRACTOR of the obligations to carry on the work in accordance with the progress schedule and without delay during disputes and disagreements with the CITY.

- END OF SECTION -

SECTION 00800

SUPPLEMENTARY GENERAL CONDITIONS

INDEX TO ARTICLES

1.	Project Schedule	00800-2
2.	Insurance Requirements	00800-3
3.	Liquidated Damages	00800-5
4.	Restricted Area	00800-5
5.	Existing Facilities and Structures	00800-5
6.	Explosives	00800-5
7.	Contract Documents	00800-5
8.	Required Notifications	00800-6
9.	Notice of Completion	00800-6
10.	Prevailing Wage Requirement	00800-6
11.	Inspections and Testing During Overtime	00800-6
12.	Retainage	00800-7
13.	Owner’s Contingency	00800-7

General Note:

The General Conditions refer to specific section numbers in the Supplementary General Conditions. These reference numbers may not coordinate with the actual Article numbers utilized in the Supplementary General Conditions. The CONTRACTOR shall comply with all General Conditions and all Supplementary General Conditions as well as related conditions included in the General Requirements, Division 1 of the Technical Specifications. Incorrect cross-reference numbers shall not relieve this requirement.

1. Project Schedule

Time is of the essence for this work. The following defines the schedule for the project:

CONSTRUCTION WORK SCHEDULE
CONSTRUCTION / STARTUP / ACCEPTANCE:

Major Milestones	Completion Time (calendar days)
1. Major Project Milestone –Substantial Completion	700
2. Major Milestone – Project Closeout	30

Individual project schedules may be established per work order contract.

Failure to meet any of the above defined construction/startup/acceptance completion dates shall subject the CONTRACTOR to pay damages as specified in these Supplementary General Conditions in Article 3.

[(1)]Project Closeout

1. Refer to Division 1 General Requirement, Section 01 70 00 Project Closeout.

2. Project Closeout shall also include:

   - Site cleanup and restoration completed
   - All other site work completed
   - Minor punch list items completed (minor as defined by the Engineer in the field)
   - Demobilization completed
   - Releases from all parties who are entitled to claims

The title "Engineer" utilized in these descriptions for final completion shall mean the City staff engineer assigned to this project, or his designated representative.

2. Insurance Requirements

The insurance required by Article 5.6 of the General Conditions shall be as follows:

Any Sub-Contractor used by the contractor shall supply such similar insurance required of the contractor. Such certificates shall name the City of Hollywood as an Additional Insured.

1. **GENERAL LIABILITY (GL3):**
Prior to the commencement of work governed by this contract, the Contractor shall obtain General Liability Insurance. Coverage shall be maintained throughout the life of the contract and include, as a minimum:

- Premises Operations
- Products and Completed Operations
- Blanket Contractual Liability
- Personal Injury Liability
- Expanded Definition of Property Damage

The minimum limits acceptable shall be:

$2,000,000 Combined Single Limit (CSL)

If split limits are provided, the minimum limits acceptable shall be:

$1,000,000 per Person
$2,000,000 per Occurrence
$100,000 Property Damage

An Occurrence Form policy is preferred. If coverage is provided on a Claims Made policy, its provisions should include coverage for claims filed on or after the effective date of this contract. In addition, the period for which claims may be reported should extend for a minimum of twelve (12) months following the acceptance of work by the City.

The City of Hollywood shall be named as Additional Insured on all policies issued to satisfy the above requirements.

2. GENERAL LIABILITY (GLXCU):

Recognizing that the work governed by this contract involves either underground exposures, explosive activities, or the possibility of collapse of a structure, the Contractor's General Liability Policy shall include coverage for the XCU (explosion, collapse, and underground) exposures with limits of liability equal to those of the General Liability Insurance policy.

3. VEHICLE LIABILITY (VL3):

Recognizing that the work governed by this contract requires the use of vehicles, the Contractor, prior to the commencement of work, shall obtain Vehicle Liability Insurance. Coverage shall be maintained throughout the life of the contract and include, as a minimum, liability coverage for:

- Owned, Non-Owned, and Hired Vehicles

The minimum limits acceptable shall be:

$1,000,000 Combined Single Limit (CSL)

If split limits are provided, the minimum limits acceptable shall be:

$500,000 per Person
$1,000,000 per Occurrence
$100,000 Property Damage

The City of Hollywood shall be named as Additional Insured on all policies issued to satisfy the above requirements.

4. **WORKERS' COMPENSATION (WC2):**

Prior to the commencement of work governed by this contract, the Contractor shall obtain Workers' Compensation Insurance with limits sufficient to respond to the applicable state statutes.

In addition, the Contractor shall obtain Employers' Liability Insurance with limits of not less than:

$500,000 Bodily Injury by Accident
$500,000 Bodily Injury by Disease, policy limits
$500,000 Bodily Injury by Disease, each employee

Coverage shall be maintained throughout the entire term of the contract.

Coverage shall be provided by a company or companies authorized to transact business in the state of Florida and the company or companies must maintain a minimum rating of A-VI, as assigned by the A.M. Best Company.

If the Contractor has been approved by the Florida's Department of Labor, as an authorized self-insurer, the City shall recognize and honor the Contractor's status. The Contractor may be required to submit a Letter of Authorization issued by the Department of Labor and a Certificate of Insurance, providing details on the Contractor's Excess Insurance Program.

If the Contractor participates in a self-insurance fund, a Certificate of Insurance will be required. In addition, the Contractor may be required to submit updated financial statements from the fund upon request from the City.

5. **POLLUTION LIABILITY INSURANCE**

The minimum limits of liability shall be:

$1,000,000 per each claim / $2,000,000 aggregate

Coverage shall be provided by a company or companies authorized to transact business in the state of Florida and the company or companies must maintain a minimum rating of “A” and Class X, as assigned by the A.M. Best Company.

The policy must be endorsed to provide the City with (30) days’ notice of cancellation.

If the Contractor has been approved by the Florida's Department of Labor, as an authorized self-insurer, the City shall recognize and honor the Contractor's status. The Contractor may be required to submit a Letter of Authorization issued by the Department of Labor and a Certificate of Insurance, providing details on the Contractor's Excess Insurance Program.

If the Contractor participates in a self-insurance fund, a Certificate of Insurance will be required. In addition, the Contractor may be required to submit updated financial statements from the fund upon request from the City.

Any sub-consultant shall supply such similar insurance required of the Consultant. Such certificates shall name the City as additional insured in the general liability and auto liability policies.

3. Liquidated Damages

Liquidated damages shall be paid by the CONTRACTOR to the CITY for failure to complete work on time in accordance with the following schedule:

CONSTRUCTION/STARTUP/ACCEPTANCE:

Major Milestones	Completion Time (calendar days)	Liquidated Damages
1. Substantial Completion	700	$1000/day
2. Project Closeout	30	$1000/day

The CITY is hereby authorized to deduct the sums described above from the monies which may be due to the CONTRACTOR for the work under this contract. Liquidated damages shall be additive such that the maximum total which may be deducted shall be $1,000/day. Other damages for failure to meet warranty conditions as defined in other sections of the Specifications shall also be added with liquidated damages for failure to meet completion times.

4. Restricted Area

The CONTRACTOR shall, in installing the new facilities, confine all activities within the CITY property, easement, and right-of-ways indicated.

5. Existing Facilities and Structures

All existing facilities shall be protected, and if damaged, shall be repaired by the CONTRACTOR at no additional cost to the CITY.

6. Explosives

Explosives shall not be used on this project.

7. Contract Documents

The CITY will provide the CONTRACTOR with one (1) set of Contract Documents after the Notice to Proceed.

8. Required Notifications

When provisions of the pertinent codes, standards or regulations conflict with this Specification, the more stringent shall apply.

Prior to any site work, the CONTRACTOR shall notify the Engineering and Construction Services Division Inspector at (954) 921-3930.

Prior to excavation at the site, the CONTRACTOR shall notify the appropriate utilities and Sunshine State One-Call of Florida, Inc. (formerly U.N.C.L.E.) at 1-800-432-4770 for locations of buried utilities.

Prior to closure of any CITY streets of alleyways, or other activity which requires the diversion of traffic, the CONTRACTOR shall notify and obtain the permission of the CITY of Hollywood Fire and Police Communications Section at (954) 967-4321.

9. Notice of Completion

See attached form.

10. Prevailing Wage Requirement

A. The CONTRACTOR shall be responsible for ensuring payment of the rate of wages and fringe benefits, or cash equivalent, for all laborers, mechanics and apprentices employed by him/her or his/her SUBCONTRACTORS on the work covered by this contract which shall be not less than the prevailing rate of wages and fringe benefits payment or cash equivalent for similar skills or classifications of work as established by the General Wage Decision by the United States Department of Labor for Broward County, Florida that is in effect prior to the date the CITY issued the invitation for bids for this project (the prevailing rate of wages and fringes can be obtained at website http://www.access.gpo.gov/ davisbacon).

If the General Wage Decision fails to provide for a fringe benefit rate for any worker classification, then the fringe benefit rate applicable to such worker classification shall be the fringe benefit rate that has a basic wage rate closest in dollar amount to the work classification for which no fringe benefit rate has been provided.

B. Upon commencement of work, the CONTRACTOR and all of his/her SUB-CONTRACTORS shall post a notice in a prominent place at the work site stating the requirements of this Article.

C. As per the City of Hollywood Code of Ordinances, Prevailing Wage Requirements and Fringe Benefits are applicable to the following: (A) Utilities projects over $1,000,000.00 (one

million dollars) and (B) All other projects over $500,000.00 (five hundred thousand dollars).

11. Inspections and Testing During Overtime

A. The following supplement Article 3.15 and 3.16 of the General Conditions:

For weekend work, CONTRACTOR shall submit a written request to the CITY by the preceding Wednesday. A separate request is required for each week that the CONTRACTOR wished to work on a weekend. For evening and holiday work, CONTRACTOR shall submit a written request to the CITY 3 days in advance. The CITY will provide inspection services for all overtime work and the CONTRACTOR shall pay for inspection services per Article 3.15, no exceptions.

Similarly, holiday and other overtime work shall be requested a minimum of 36-hours in advance and CITY will provide inspection for all overtime.

B. Exceptions to the hours and days of the week for work and other related limitations are allowed only for tie-ins during low flow periods / early morning hours, coatings that need to be applied during lower temperature times of the day and whenever the Documents specifically define that work shall be completed outside of the limitations for "normal" work hours, days, etc.

Inspection for tie-ins during low flow/early morning and specialty coating application performed during nighttime will not be cause for extra inspection costs unless such work is remedial in nature as a result of defective work.

12. Retainage

After Substantial Completion of the construction services purchased pursuant to each individual work order under this contract, CONTRACTOR may present to CITY a payment request for one-half of the retainage then held by CITY. CITY shall promptly make payment to CONTRACTOR, unless CITY has grounds for withholding the payment of retainage. CITY shall have grounds for withholding the payment of retainage with respect to any amounts that are the subject of a good-faith dispute, the subject of a claim brought pursuant to Florida Statute Section 255.05, or otherwise the subject of a claim or demand by CITY or CONTRACTOR.

At acceptance of completion of all punch list items, CITY shall promptly make payment to CONTRACTOR the balance of retainage then held by CITY.

13. Owner's Contingency

This allowance is in its entirety dedicated for the use of the Owner (The City of Hollywood) to address conditions (or work) associated with undefined conditions. All work resulting from undefined conditions shall be authorized in writing and in advance by the Owner, specifically the Director of Public Services, through the full execution of a Field Order. The actual amount to be paid per Field Order will be negotiated and agreed by both parties (the Owner and the Contractor). The final/negotiated amount of the field order will be deducted from the Owner's Allowance designated in the Bid Proposal and Schedule of Values. The Owner reserves the right to award none, any portion of, or all of the money associated with this allowance. By executing the CONTRACT between the City of Hollywood and the Contractor, the Contractor acknowledges that under no circumstances he or she should assume that he or she would be entitled to any amounts set aside by the City of Hollywood within the Owner's Allowance.

CERTIFICATE OF SUBSTANTIAL COMPLETION

PROJECT: XXXX

ENGINEER: Engineering Construction Services Division

TO: **CONTRACTOR:**

CONTRACT FOR:

NOTICE TO PROCEED DATE:

DATE OF ISSUANCE:

PROJECT OR DESIGNATED PORTION SHALL INCLUDE:

Portions of the work performed under this Contract as described above, have been reviewed and found to be substantially complete. The Date of Substantial Completion of Project or designated portion thereof designated above is hereby established as _____ which is also the date of commencement of applicable warranties required by the Contract Documents for the noted area.

DEFINITION OF DATE OF SUBSTANTIAL COMPLETION

The Date of Substantial Completion of the work or designated portion thereof is the date certified by the ENGINEER ("Date of Issuance" above) when construction is sufficiently complete, in accordance with the Contract Documents, so the CITY can occupy or utilize the work or designated portion thereof for the use for which it is intended, as expressed in the Contract Documents.

A list of items to be completed or corrected, prepared by the CONTRACTOR and verified and amended by the ENGINEER, for the above referenced "Project or Designated Portion" is attached to this form (attached "Punch List" dated___).

The failure to include any items on such list does not alter the responsibility of the CONTRACTOR to complete all work in accordance with the Contract Documents.

CERTIFICATE OF SUBSTANTIAL COMPLETION

Please note that in accordance with Article 14 General Conditions, the Contractor retains full responsibility for the satisfactory completion of all work regardless of whether the Owner occupies and / or operates a part of the facility and that the taking possession and use of such work shall not be deemed an acceptance of any work not completed in accordance with the Contract Documents.

City of Hollywood ECSD

ENGINEER	**BY**	**DATE**

CONTRACTOR	**BY**	**DATE**

The CITY OF HOLLYWOOD, through the City's authorized representative, accepts the work or designated portion thereof as substantially complete and will assume full possession thereof at _____ (time) _____ (date).

BY	**DATE**

- END OF SECTION -

CITY OF HOLLYWOOD, FLORIDA

DEPARTMENT OF PUBLIC UTILITIES
ENGINEERING AND CONSTRUCTION SERVICES DIVISION
P. O. BOX 229045 · HOLLYWOOD, FL 33022-9045 · PHONE: 954-921-3930 · FAX: 954-921-3937

On-Call and Emergency Water and Sewer Utility Repair Services
Addendum No. 1

Date: July 26, 2022

Solicitation Number: IFB-4730-22-OT

Project Number: 22-7112 & 22-5144

ALL BIDDERS BE ADVISED OF THE FOLLOWING CHANGES TO THE ABOVE REFERENCED PROJECT AS LISTED BELOW:

This addendum is issued as part of the Bidding Documents for the above-described project. The changes incorporated in this addendum shall be considered as a part of the documents and shall supersede, amend, add to, clarify, or subtract from those conditions shown in the original documents. The bidder shall coordinate all modifications herein with all trades and disciplines related to the work. The Bidder shall acknowledge receipt of this addendum on the Bid Form by addendum number and date. Failure to do so may subject Bidder to disqualification.

Item 1: Specifications

1.1 Section 00100 – Instructions to Bidders, please replace in its entirety this section with the revised Section 00100 enclosed in this addendum.
1.2 Section 00301 – Proposal Bid Form, please replace in its entirety this section with the revised section enclosed in this addendum.
1.3 Section 01025 – Basis of Payment, please replace in its entirety this section with the revised section enclosed in this addendum.
1.4 Section 00410 – Approved Bid Bond, please replace in its entirety this section with the revised section enclosed in this addendum.

Item 2: Pre-Bid Meeting Minutes & Attendance Record

See attached pre-bid meeting minutes and attendance record.

Item 3: Responses to Contractor Written Questions

Question1 - What is the yearly budget?
Response: $1,000,000.00 per Contract, as needed

Question2 - What is the minimum dollar amount for a given task order?
Response: There is no minimum dollar amount for a given task.

Question 3 - Is this Bid Submittal a hard turn in or an electronic turn in?

Response: It will be the Bidder's sole responsibility to hand-deliver or mail his/her proposal to the City Clerk's Office at City Hall so that it arrives on or before the closing time and date for the receipt of bids as noted above. This is not an electronic bid. The Bidder is responsible for hand delivering or mailing their bids to the Office of the City Clerk

Question 4 - On page 00100-1 Section 2, the City is asking for a bid bond to be provided. This is not something that is typically asked for with a as-needed on-call IDIQ project solicitation with no defined contract value. We would therefor like to ask that this bid bond requirement either be removed or the city provide a fix dollar amount instead of a percentage of bid total.

Response: The Bidder is responsible for providing a Bid Bond of 5% of the Base Bid total.

Question 5 – Will the City allow for price escalation for disciplines such as paving, striping, concrete work, etc.?

Response: No price escalation will be allowed.

Question 6 - the bid bond form states we provide a 10% bid bond and in section 00030 page 00030-01, of the bid documents, it states a bid bond no less than 5% will accompany the bid. please confirm 5% or 10% bid bond.

Response: The Bidder is responsible for providing a Bid Bond of 5% of the Base Bid total

Question 7 - Please add a set of wage rates to the bid form for off-hours/night/weekend/holiday emergency rates as the project specifications do not allow for work to be performed normally during those hours

Response: Please refer to revised Section 00301, Proposal Bid Form, included in this addendum.

Question 9 - The contact states that this is a 2-year base term project with 3 additional 1 year extension options. How does the city intend to deal with the rising cost of labor and equipment in the event the city decides to execute these options? Will the contractor be held to the contract unit prices or will escalations be allowed for each of those 1 years terms?

Response: No price escalation will be allowed. Selected contractors have the option to choose to not renew/extend contract after completion of 1st term.

Question 10 - How does the city intend to pay for emergency work that is not possible to be completed in a single 8 hour shift? Will the contractor be allowed to bill for multiple days in the event a repair will take longer than 8 hours to complete, or will we be allowed to protect the excavation and return the following day to complete the work?

Response: Please refer to revised Section 00301, Proposal Bid Form, included in this addendum.

Question 11 - Please provide a list of all city furnished equipment and material associated with this project as referenced on sheet 00700-26 section 8.4

Response: All equipment and material to be provided by contractor.

Question 12 - Please provide a pay item for the handling, removal, and disposal of organic or unsuitable materials in the event they are encountered.

Response: Any work to be done by a sub-contractor will be paid from the Material/Equipment Supply/Subcontractor Allowance Contractor. Contractor must present three (3) quotes for each work. Quotes to be selected/approved by the City before the work is completed.

Question 13 - thank you for clarify that the bid bond will only be needed for 5%, will the city be issued a revised bid bond form to reflect the 5%? As the form is right now showing 10% and typically we are not allowed to alter the forms.

Response: The Bidder is responsible for providing a Bid Bond of 5% of the Base Bid total. Refer to revised Section 00410 – Approved Bid Bond, enclosed in this addendum.

ALL OTHER TERMS, CONDITIONS AND SPECIFICATIONS SHALL REMAIN THE SAME. THIS ADDENDUM SHALL BE ATTACHED TO THE CONTRACT DOCUMENTS AND THE RECEIPT OF THE SAME SHALL BE NOTED IN THE PROPOSAL IN THE SPACE PROVIDED.

Jeff Jiang, P.E., ECSD
Department of Public Utilities

SECTION 00100

INSTRUCTIONS TO BIDDERS

1. PREPARATION OF BIDS:

Bids must be submitted on the separate and enclosed **BIDDING PACKAGE** forms, which shall be completed by **computer, typewriter** or legibly handwritten in ink. The Bid price of each item on the form must be stated in words and numerals; in case of a conflict, words will take precedence. Where unit prices and extended totals are required, unit prices take precedence. Likewise, discrepancies between the indicated sum of any column of figures and the correct sum thereof will be resolved in favor of the correct sum.

If the Bid is made by an individual, he must sign his name therein and state his address. If the Bid is made by a firm or partnership, its name and address must be stated, as well as the name and address of each member of the firm or partnership. Bids by corporations must be signed by an authorized corporate officer (accompanied by evidence of authority to sign) and the corporate seal must be affixed and attested by the Secretary or an Assistant Secretary of the corporation. The corporate address and state of incorporation shall be shown below the signature. When the state of incorporation is other than Florida, proof of registry with Florida must be attached.

2. RECEIPT AND OPENING OF BIDS:

The Bid Package consisting of the PROPOSAL, PROPOSAL BID FORM, APPROVED BID BOND, TRENCH SAFETY FORM, INFORMATION REQUIRED FROM BIDDERS AND LIST OF SUBCONTRACTORS AND/OR MATERIAL SUPPLIERS shall be completed, signed and sealed as required and must be delivered or mailed to the City Clerk of Hollywood, Florida, by the time and date specified in the Notice to Bidders and shall be properly identified on the face thereof.

Proposals will be publicly opened and immediately read aloud at the time and place designated in the Notice to Bidders. No proposal will be considered which is not based upon the Specifications and Requirements, or which contains any letter or written memorandum qualifying the same, or which is not properly made out and signed in writing by the Bidder.

3. PRE-BID CONFERENCE:

The **optional** pre-bid meeting for the project will occur on **July 7th, 2022 at 3:00 pm** at the Southern Regional Wastewater Treatment Plant, 1621 N. 14th Avenue, Hollywood,

Florida, 33020, ESS Conference Room, First Floor.

4. CONTRACT DOCUMENTS:

The Contract Documents give the location and description of the work to be done under this Contract and estimated quantities of each item of work for which Bids are invited, the time in which the work must be completed, the amount of the Bid Guaranty, if any, and the date, time and place of the receipt and opening of the Bids

5. EXAMINATION OF CONTRACT DOCUMENTS AND REQUIREMENTS:

The Bidder is required to carefully examine the Contract Documents and requirements for the work contemplated. It will be assumed that the Bidder has investigated and is fully informed as to the requirements of the Contract Documents, laws, ordinances, codes and any other factors which may affect the performance of the work. Failure to be so informed will not relieve a successful Bidder of his obligation to furnish all material, equipment and labor necessary to carry out the provision of the Contract Documents and to complete the contemplated work for the consideration set forth in his Bid.

6. DIMENSIONS, QUANTITIES AND SUBSURFACE INFORMATION:

Dimensions, quantities and subsurface information supplied by the City are in no way warranted to indicate true amounts or conditions. Bidders/Contractors shall neither plead misunderstanding or deception, nor make claims against the City if the actual amounts, conditions or dimensions do not conform to those stated. Any "Outside" reports made available by the Engineer are neither guaranteed as to accuracy or completeness, nor a part of the Contract Documents. No guarantee is expressed or implied as to the total quantity of services to be purchased under this Contract. It is noted that estimated quantities will be used for bid comparison purposes only.

7. ADDENDA - CHANGES WHILE BIDDING:

During the Bidding period, Bidders may be furnished addenda or bulletins for additions or alterations to the Plans or Specifications which shall be included in the work covered by the Proposal.

Any prospective Bidder in doubt as to the meaning of any part of the Drawings, Specifications or other Contract Documents may submit a written request to the Engineer for an interpretation. The Bidder submitting the request will be responsible for its prompt delivery. Any interpretation of the documents will be made by an addendum and a copy

of such addendum will be mailed or delivered to each prospective Bidder who has received a set of documents. The City will not be responsible for any other explanations or interpretations of the proposed documents. Each prospective bidder must submit their questions or inquiries via www.bidsync.com.

ALL INQUIRES MUST BE RECEIVED, IN WRITING, BY THE CITY OF HOLLYWOOD NO LATER THAN 5:00 P.M., JULY 21, 2022. AN ADDENDUM MAY BE ISSUED IF REQUIRED.

8. BID GUARANTY:

A Bid Guaranty in the form of a Cashier's Check, Certified Check or Bid Bond executed by the Bidder and a qualified Surety in the amount of 5% of the Bid is required for this project in accordance with the Notice to Bidders.

9. TRENCH SAFETY FORM:

The Trench Safety Form included in the Bid Documents must be completed and signed. Noncompliance with this requirement may invalidate the bid.

10. QUALIFICATIONS AND DISQUALIFICATIONS OF BIDDERS:

The Contract will be awarded only to the responsive and responsible bidder(s), who in the opinion of the Engineer, are fully qualified to undertake the work and are in compliance with the City's Local Preference Criteria (when applicable). The City reserves the right before awarding the Contract to require a bidder to submit such evidence of his qualifications as it may deem necessary and may consider any available evidence of his financial status, technical qualifications and other qualifications and abilities.

Bidders shall submit proof, along with their bid, that their firm has successfully completed comparable projects meeting the following criteria:

A. The Bidder shall have successfully completed **(or on-going)** a minimum of ~~five (5)~~ **three (3)** relevant projects demonstrating experience with water and sewer pipe ~~routine and~~ emergency repair work. These projects shall have been performed within the past ~~three (3)~~ **two (2)** years from the date of the Invitation to Bid.

B. Provide **at least** four **(4)** verifiable references for projects similar in size and scope or types of work as listed in this solicitation using the attached vendor reference form.

C. Shall be fully qualified and holds the ~~proper~~ Federal, State, County and/or municipal licenses, including but not limited to certificates of competency and occupational licenses to perform the scope of work described in the solicitation.

D. Be properly licensed to perform work as a General Contractor in the State of Florida, Broward County, and the City of Hollywood.

E. Have been a ~~properly~~ licensed General Contractor in the **State of Florida and Broward County** under the present name of the organization for ~~a minimum of~~ the previous ten (10) years **(minimum).**

F. City is seeking Contractor who could be available on an emergency basis. Contractor must demonstrate that they own the appropriate equipment and have staff to perform the Work

Any one of the following causes, among others, may be considered as sufficient justification to disqualify a bidder and reject his or her bid:

A. Submission of more than one bid for the same work by an individual, firm, partnership or corporation under the same or different names.

B. Evidence of collusion.

C. Previous participation in collusive bidding on work for the City of Hollywood, Florida.

D. Submission of an unbalanced bid in which the prices bid for some items are out of proportion to the prices bid for other items.

E. Lack of competency. The Bidder shall provide proof that their past experience can demonstrate similar complexity and size compared to this contract. The Engineer may declare any bidder ineligible, at any time during the process or receiving bids or awarding the contract, if developments arise which, in his opinion, adversely affects the bidder's responsibility. The Bidder will be given an opportunity, by the engineer, to present additional evidence before final action is taken.

F. Lack of responsibility as shown by past work judged by the Engineer from the standpoint of workmanship and progress.

G. Non-compliance with the City's Local Preference (when applicable).

H. Uncompleted work for which the Bidder is committed by Contract, which is in the judgment of the Engineer, might hinder or prevent the prompt completion of work under this Contract.

I. Being in arrears on any existing Contracts with the City, or any taxes, licenses or other monies due the City; in litigation with the City or having defaulted on a previous contract with the City.

11. LIFE AND WITHDRAWAL OF BID:

All Bids shall remain open for 90 days after the day of the Bid opening, however, the Engineer may, at his sole discretion, release any Bid and return the Bid Guaranty prior to that date. Any Bid may be modified or withdrawn prior to the time scheduled for the opening of Bids.

12. REJECTION OF IRREGULAR BIDS:

Bids will be considered irregular and may be rejected if they show omissions, alterations of form, additions not called for, conditions, limitations, unauthorized alternate Bids or other irregularities of any kind.

13. BIDDING ERRORS:

If after the opening of bids, a Bidder claims an error and requests to be relieved of the Award, or the Engineer believes that an error may have been made then, the Bidder shall present his work sheets and supplier quotations to the Engineer for verification. This information shall be presented on the same day as the bid opening or if the opening is in the afternoon then on the following business day. When the Engineer has suspected an error and requires the documents, Bidder's failure to produce them within the time specified shall make the Bidder non- responsive and thereby eligible for disqualification. Award may then be made to the next lowest responsive, responsible Bidder, or the work may be re-advertised or it may be performed by City forces, as the Commission desires.

14. AWARD OF CONTRACT (MULTIPLE AWARDS):

The City Commission reserves the right to reject any or all Bids, or any part of any Bid, to waive any informality in any Bid, or to re-advertise for all or any part of the work contemplated. If Bids are found to be acceptable by the City Commission, written notice of award will be given to the lowest responsive, responsible Bidder(s).

A. The City reserves the right to make multiple awards for this contract. Awards may be made to a maximum of two (2) responsive, responsible vendors. ~~In the event the City exercises this right, the lowest, responsive, responsible vendor will be designated as the primary vendor. The next low, responsive, responsible Vendor will be designated as the secondary vendor.~~ **In the event the City exercises this right, the two (2) selected lowest, responsive, responsible vendors will be awarded a maximum $1 million in Contract**. The City is not obligated to make multiple awards.

B. ~~The Primary Contract will be awarded to the low responsive, responsible vendor (primary vendor). The Secondary Contract will be awarded to the second lowest, responsive, responsible vendor (secondary vendor).~~ **The City will alternate the issuance of Work Orders / Purchase Orders between the two (2) awarded Contracts. City reserves the right to award more work orders to the most responsive Contractor.**

C. ~~Work Orders / Purchase Orders issued under the Secondary Contract will be issued when the Primary vendor is unable to perform or when the City determines that the Primary Vendor's maximum service capacity has been reached (based on outstanding City purchase orders) and additional service capacity is still needed by the City to meet the City's service timeframes.~~

D. Awarded Contractor(s) cannot decline projects in order to be assigned larger or more favorable projects. Contractor may be in breach of contract for non-performance or City may elect to not renew contract for Contractor's failure to accept Work.

15. EXECUTION OF CONTRACT:

The Bidder (s) to whom the Contract is awarded shall, within ten days of the date of award, execute and deliver three (3) copies of the following to the Engineer.

A. The Contract

B. Performance and Payment Bond

C. Evidence of required Insurance

D. Proof of authority to execute the Contract

E. Proof of authority to execute the Bond on behalf of the Awardee

F. List of Subcontractors, estimated Contract Value for each and proof that such subcontractors possess all required Federal, State, County and/or municipality licenses, including but not limited to certified of competency and occupational license.

The above documents must be furnished, executed and delivered before the Contract will be executed by the City. The Contract shall not be binding upon the City until it has been executed by the City and a copy of such fully executed Contract is delivered to the Contractor.

16. FAILURE TO EXECUTE CONTRACT, BID GUARANTY FORFEITED:

Should the Bidder to whom the Contract has been awarded refuse or fail to complete the requirements of Article 15 above within ten (10) days after Notice of Award, the additional time in days (including weekends) required to CORRECTLY complete the documents will be deducted, in equal amount, from the Contract Time, or the City may elect to revoke the Award. In the same manner as Article 13, the Bid Guaranty of any Bidder failing to execute the awarded Contract shall be retained by the City and the Contract awarded as the Commission desires

17. GUARANTY OF FAITHFUL PERFORMANCE AND PAYMENT:

A Performance Bond and a Payment Bond each equal to 100 percent of the total Bid will be required of the Awardee. The Bond must be written through a company licensed to do business in the State of Florida and be rated at least "A", Class X, in the latest edition of "Best's Key Rating Guide", published by A.M. Best Company. As per Florida Statute Section 255.05, the Contractor shall be required to record the payment and performance bonds in the public records of Broward County.

18. INSURANCE:

Bidder must satisfy all insurance requirements as set forth in the Supplementary and General Conditions.

The insurance policy shall not contain any exceptions that would exclude coverage for risks that can be directly or reasonably related to the scope of goods or services in this bid/proposal. A violation of this requirement at any time during the term, or any extension thereof shall be grounds for the immediate termination of any contract entered in to pursuant to this bid/proposal. In order to show that this requirement has been met, along with an insurance declaration sheet demonstrating the existence of a valid policy of insurance meeting the requirements of this bid/proposal, the successful proposer must submit a signed statement from insurance agency of record that the full policy contains no such exception.

19. QUALIFICATIONS:

At the time of submission of the bid, Bidder must possess, and be able to provide City, any and all required Federal, State, County and/or municipal licenses, including but not limited to certificates of competency and occupational licenses. Moreover, upon receipt of the Award of the Contract, Bidder must provide proof of valid licensing for all subcontractors and/or material suppliers hired by the Contractor as set forth in Article 15 above.

When the Bidder is a Joint Venture, in order to satisfy the construction licensing requirements one member of a Joint Venture must hold a valid state certificate as well as the appropriate county and city license. The Contractor shall be held responsible for assurance that all subcontractors and/or material suppliers hired by the Contractor have the appropriate state certificate and licenses.

20. PERMITS:

The Contractor and Subcontractors must obtain Building Permits required for all work covered under this contract as well as any other permit required by any other regulatory agency. The Master Building Permit required by the City shall be obtained by the Contractor but paid for by the City. Any and all other permits required by the City, County, State of Florida, or other regulatory agency shall be obtained and paid for by the Contractor.

The Contractor or Subcontractors shall also be responsible to call for all inspections as required in Section 105 (Inspections) of the latest edition of the Florida Building Code.

- END OF SECTION -

SECTION 00301

CITY OF HOLLYWOOD
DEPARTMENT OF PUBLIC UTILITIES
ENGINEERING AND CONSTRUCTION
SERVICES DIVISION

PROPOSAL BID FORM

Bid No.: **IFB-4730-22-OT**
Project Name: **ON-CALL AND EMERGENCY WATER AND SEWER UTILITY REPAIR SERVICES (7112 & 5144)**

BASE BID

The City is seeking bids/proposals from qualified vendors for the items listed below in accordance with the terms, conditions, and specifications contained in this solicitation. Estimated quantities listed are for information and tabulation purposes only. No warranty or guarantee of quantities needed is given or implied. It is understood that the Contractor will furnish the City's needs as they arise. **CONTRACTOR SHALL PROVIDE UNIT PRICE FOR EACH LINE ITEM**

Item No.	Description	Est. Qty	Unit	Unit Price	Total Price
Bid Package 1 – On-call Routine Repair Services (labor, equipment, tools, and parts)					
1	Mobilization for On-call Routine Work Order (≤$25,000)	1	EA	$	$
2	Mobilization for On-call Routine Work Order (>$25,000 to $100,000)	1	EA	$	$
3	Mobilization for On-call Routine Work Order (≥$100,000)	1	EA	$	$
4	Cut and Connect 4-inch WM to Existing System (5 feet MAX and up to 6 - 10 feet depth)	1	EA	$	$
5	Cut and Connect 6-inch WM to Existing System (5 feet MAX and up to 6 - 10 feet depth)	1	EA	$	$
6	Cut and Connect 8-inch WM to Existing System (5 feet MAX and up to 6 - 10 feet depth)	1	EA	$	$
7	Cut and Connect 10 inch or 12-inch WM to Existing System (5 feet MAX and up to 6 - 10 feet depth)	1	EA	$	$
8	Cut and Connect 16-inch WM to Existing System (5 feet MAX and up to 6 – 10 feet depth)	1	EA	$	$

The City is seeking bids/proposals from qualified vendors for the items listed below in accordance with the terms, conditions, and specifications contained in this solicitation. Estimated quantities listed are for information and tabulation purposes only. No warranty or guarantee of quantities needed is given or implied. It is understood that the Contractor will furnish the City's needs as they arise. **CONTRACTOR SHALL PROVIDE UNIT PRICE FOR EACH LINE ITEM**

9	Cut and Connect 20-inch WM to Existing System (5 feet MAX and up to 6 - 10 feet depth)	1	EA	$	$
10	Cut and Connect 24-inch WM to Existing System (5 feet MAX and up to 6 - 10 feet depth)	1	EA	$	$
11	Cut and Connect 6 inch or 8-inch FM to Existing System. No Bypass. (5 feet MAX and up to 6 - 10 feet depth)	1	EA	$	$
12	Cut and Connect 10 inch or 12-inch FM to Existing System. No Bypass. (5 feet MAX and up to 6 - 10 feet depth)	1	EA	$	$
13	Cut and Connect 16 inch or 20-inch FM to Existing System. No Bypass. (5 feet MAX and up to 6 - 10 feet depth)	1	EA	$	$
14	Cut and Connect 24-inch FM to Existing System. No Bypass. (5 feet MAX and up to 6 - 10 feet depth)	1	EA	$	$
15	Cut and Grout 8-inch pipe abandoned (up to 12 feet depth) (payment based on Min 100 feet)	1	LF	$	$
16	Cut and Grout 12-inch pipe abandoned (up to 12 feet depth) (payment based on Min 100 feet)	1	LF	$	$
17	Cut and Grout 16-inch pipe abandoned (up to 12 feet depth) (payment based on Min 100 feet)	1	LF	$	$
18	Cut and Grout 24-inch pipe abandoned (up to 12 feet depth) (payment based on Min 100 feet)	1	LF	$	$
19	Install Sanitary Service Line on Private Property by Licensed Plumber and Permitting (Min 10 LF)	1	LF	$	$

The City is seeking bids/proposals from qualified vendors for the items listed below in accordance with the terms, conditions, and specifications contained in this solicitation. Estimated quantities listed are for information and tabulation purposes only. No warranty or guarantee of quantities needed is given or implied. It is understood that the Contractor will furnish the City's needs as they arise. **CONTRACTOR SHALL PROVIDE UNIT PRICE FOR EACH LINE ITEM**

20	Install Water Service Line on Private Property by Licensed Plumber and Permitting (Min 10 LF)	1	LF	$	$
21	Furnish and Install Tapping Saddle and Water Service Line (1-inch) on Existing Water Main	1	EA	$	$
22	Furnish and Install Tapping Saddle and Water Service Line (2-inch) on Existing Water Main	1	EA	$	$
23	Furnish and Install Asphalt Concrete Pavement Patch (Min 7 SY)	1	SY	$	$
24	Mill Asphalt Concrete Pavement 1 - inch Thick (Min 60 SY)	1	SY	$	$
25	Vertical Valve Box Adjustment	1	EA	$	$
26	Adjust Manhole Ring Elevation	1	EA	$	$
27	Replace Concrete Curb and Gutter Type F (Min 50 LF)	1	LF	$	$
28	Replace Reflective Pavement Marker RPM (Min 5 RPMs)	1	EA	$	$
29	Replace Thermoplastic Striping White or Yellow Solid 6 inch (Min 50 LF)	1	LF	$	$
30	Replace Thermoplastic Striping White or Yellow Solid 8 inch (Min 50 LF)	1	LF	$	$
31	Replace Thermoplastic Striping White or Yellow Solid 12 inch (Min 50 LF)	1	LF	$	$
32	Replace Thermoplastic Striping White or Yellow Solid 24 inch (Min 50 LF)	1	LF	$	$
33	Restoration of Asphalt Driveways (Min 10 SY)	1	SY	$	$
34	Restoration of Concrete Driveways (Min 10 SY)	1	SY	$	$
35	Furnish and Install Sod Saint Augustine (Min 50 SY)	1	SY	$	$

The City is seeking bids/proposals from qualified vendors for the items listed below in accordance with the terms, conditions, and specifications contained in this solicitation. Estimated quantities listed are for information and tabulation purposes only. No warranty or guarantee of quantities needed is given or implied. It is understood that the Contractor will furnish the City's needs as they arise. **CONTRACTOR SHALL PROVIDE UNIT PRICE FOR EACH LINE ITEM**

36	Furnish and Install Sod Bahia (Min 50 SY)	1	SY	$	$
37	Replacement of 4-inch Concrete Sidewalk (Min 30 SY)	1	SY	$	$
38	Replacement of 6-inch Concrete Sidewalk (Min 30 SY)	1	SY	$	$
39	Furnish and Install FDOT Number 89 Stone (Min 5 CY)	1	CY	$	$
40	Furnish and Install Compacted Subgrade (Min 5 CY)	1	CY	$	$
41	Furnish and Install Compacted Limerock (Min 5 CY)	1	CY	$	$
42	Maintenance of Traffic (MOT) Plans	1	SHEET	$	$
43	Traffic control - Flagman (Each)	1	HR	$	$
44	Traffic control - Arrow Board (Each)	1	DAY	$	$
45	Traffic control – Barricade (Each)	1	DAY	$	$
46	Traffic Cones w/Reflective Marker (Each)	1	DAY	$	$
47	Advanced Warning / Detour Sign (Each)	1	DAY	$	$
48	Furnish and Install Trench Safety Steel Plates (Each)	1	EA	$	$
49	Flowable Fill Non-Excavatable (Min 5 CY)	1	CY	$	$
50	Flowable Fill Excavatable (Min 5 CY)	1	CY	$	$
51	Dewatering Using Well Point Dewatering System, Equal to 25 Well Points	1	DAY	$	$
52	Dewatering Using Submersible Pump	1	EA	$	$

Items Below Shall Only Be Used for On-Call Routine Work NOT Covered By Other Pay Items

<u>Equipment Cost</u>

The City is seeking bids/proposals from qualified vendors for the items listed below in accordance with the terms, conditions, and specifications contained in this solicitation. Estimated quantities listed are for information and tabulation purposes only. No warranty or guarantee of quantities needed is given or implied. It is understood that the Contractor will furnish the City's needs as they arise. **CONTRACTOR SHALL PROVIDE UNIT PRICE FOR EACH LINE ITEM**					
53	Excavator CAT 314 or Equal	1	DAY	$	$
54	Bobcat	1	DAY	$	$
55	Excavator / Backhoe CAT 225 or Equal	1	DAY	$	$
56	Wheel Loader CAT 926 or Equal	1	DAY	$	$
57	Backhoe Loader Combo CAT 416 or Equal	1	DAY	$	$
58	Bulldozer CAT D-3 or Equal	1	DAY	$	$
59	Double Drum Compactor Wacker W74 or Equal	1	DAY	$	$
60	Vibratory Plate Compactor VPR 1740 or Equal	1	DAY	$	$
61	Asphalt Roller	1	DAY	$	$
62	Vacuum Truck	1	DAY	$	$
63	Water Truck	1	DAY	$	$
64	Generator with Mass Lighting	1	DAY	$	$
65	Flat Bed Truck under 25,000 lbs GVW	1	DAY	$	$
66	18 Yard Dump Truck	1	DAY	$	$
67	1/2 Ton Pickup Truck under 10,000 lbs GVW	1	DAY	$	$
68	Cleaning/Television Inspection Equipment	1	DAY	$	$
69	CFM Air Compressor w/hose and hammer	1	DAY	$	$
70	6 inch x 6 inch Self Priming Silent Trash Pump	1	DAY	$	$
71	Ride-On Sweeper	1	DAY	$	$

The City is seeking bids/proposals from qualified vendors for the items listed below in accordance with the terms, conditions, and specifications contained in this solicitation. Estimated quantities listed are for information and tabulation purposes only. No warranty or guarantee of quantities needed is given or implied. It is understood that the Contractor will furnish the City's needs as they arise. **CONTRACTOR SHALL PROVIDE UNIT PRICE FOR EACH LINE ITEM**					
72	Skid Steer Track Loader	1	DAY	$	$
73	Trench Shoring	1	DAY	$	$
74	Miscellaneous Small Tools	1	DAY	$	$
Labor					
75	Project Manager	100	HR	$	$
76	Superintendent	200	HR	$	$
77	Foreman	400	HR	$	$
78	Pipe Layer	400	HR	$	$
79	Laborer	400	HR	$	$
80	Operator	400	HR	$	$
81	Truck Driver	400	HR	$	$
Labor (Overtime)					
82	Project Manager (overtime)	25	HR	$	$
83	Superintendent (overtime)	50	HR	$	$
84	Foreman (overtime)	100	HR	$	$
85	Pipe Layer (overtime)	100	HR	$	$
86	Laborer (overtime)	100	HR	$	$
87	Operator (overtime)	100	HR	$	$
88	Truck Driver (overtime)	100	HR	$	$

The City is seeking bids/proposals from qualified vendors for the items listed below in accordance with the terms, conditions, and specifications contained in this solicitation. Estimated quantities listed are for information and tabulation purposes only. No warranty or guarantee of quantities needed is given or implied. It is understood that the Contractor will furnish the City's needs as they arise. **CONTRACTOR SHALL PROVIDE UNIT PRICE FOR EACH LINE ITEM**

Bid Package 2 - Items Below Shall Be Used for ALL Emergency Repair Services

89	Expedited Mobilization (within 4 hours of request) (≤$100,000)	1	EA	$	$
90	Expedited Mobilization (within 24 hours of request) (≤$100,000)	1	EA	$	$
91	Expedited Mobilization (within 4 hours of request) (>$100,000)	1	EA	$	$
92	Expedited Mobilization (within 24 hours of request) (>$100,000)	1	EA	$	$
93	Flowable Fill Non-Excavatable (Min 5 CY)	1	CY	$	$
94	Flowable Fill Excavatable (Min 5 CY)	1	CY	$	$
95	Maintenance of Traffic (MOT) Plans	1	SHEET	$	$
96	Traffic control - Flagman (Each)	1	HR	$	$
97	Traffic control - Arrow Board (Each)	1	DAY	$	$
98	Traffic control - Barricade (Each)	1	DAY	$	$
99	Traffic Cones w/Reflective Marker (Each)	1	DAY	$	$
100	Advanced Warning / Detour Sign (Each)	1	DAY	$	$
101	Furnish and Install Steel Traffic Plates (Each)	1	EA	$	$
102	Dewatering Using Well Point Dewatering System, Equal to 25 Well Points	1	DAY	$	$
103	Dewatering Using Submersible Pump	1	DAY	$	$

Items Below Shall Be Used ONLY for Emergency Work NOT Covered By Other Pay Items

Equipment Cost

104	Excavator CAT 314 or Equal	1	DAY	$	$

The City is seeking bids/proposals from qualified vendors for the items listed below in accordance with the terms, conditions, and specifications contained in this solicitation. Estimated quantities listed are for information and tabulation purposes only. No warranty or guarantee of quantities needed is given or implied. It is understood that the Contractor will furnish the City's needs as they arise. **CONTRACTOR SHALL PROVIDE UNIT PRICE FOR EACH LINE ITEM**

105	Bobcat	1	DAY	$	$
106	Excavator / Backhoe CAT 225 or Equal	1	DAY	$	$
107	Wheel Loader CAT 926 or Equal	1	DAY	$	$
108	Backhoe Loader Combo CAT 416 or Equal	1	DAY	$	$
109	Bulldozer CAT D-3 or Equal	1	DAY	$	$
110	Double Drum Compactor Wacker W74 or Equal	1	DAY	$	$
111	Vibratory Plate Compactor VPR 1740 or Equal	1	DAY	$	$
112	Asphalt Roller	1	DAY	$	$
113	Vacuum Truck	1	DAY	$	$
114	Water Truck	1	DAY	$	$
115	Generator with Mass Lighting	1	DAY	$	$
116	Flat Bed Truck under 25,000 lbs GVW	1	DAY	$	$
117	18 Yard Dump Truck	1	DAY	$	$
118	1/2 Ton Pickup Truck under 10,000 lbs GVW	1	DAY	$	$
119	Cleaning/Television Inspection Equipment	1	DAY	$	$
120	CFM Air Compressor w/hose and hammer	1	DAY	$	$
121	6 inch x 6 inch Self Priming Silent Pump	1	DAY	$	$
122	Ride-On Sweeper	1	DAY	$	$
123	Skid Steer Track Loader	1	DAY	$	$

The City is seeking bids/proposals from qualified vendors for the items listed below in accordance with the terms, conditions, and specifications contained in this solicitation. Estimated quantities listed are for information and tabulation purposes only. No warranty or guarantee of quantities needed is given or implied. It is understood that the Contractor will furnish the City's needs as they arise. **CONTRACTOR SHALL PROVIDE UNIT PRICE FOR EACH LINE ITEM**					
124	Trench Shoring	1	DAY	$	$
125	Miscellaneous Small Tools	1	DAY	$	$
Labor					
126	Project Manager	100	HR	$	$
127	Superintendent	200	HR	$	$
128	Foreman	400	HR	$	$
129	Pipe Layer	400	HR	$	$
130	Laborer	400	HR	$	$
131	Operator	400	HR	$	$
132	Truck Driver	400	HR	$	$
Labor (Overtime)					
133	Project Manager (overtime)	25	HR	$	$
134	Superintendent (overtime)	50	HR	$	$
135	Foreman (overtime)	100	HR	$	$
136	Pipe Layer (overtime)	100	HR	$	$
137	Laborer (overtime)	100	HR	$	$
138	Operator (overtime)	100	HR	$	$
139	Truck Driver (overtime)	100	HR	$	$
Bid Package 3 – Reuse Pipe Repair					

The City is seeking bids/proposals from qualified vendors for the items listed below in accordance with the terms, conditions, and specifications contained in this solicitation. Estimated quantities listed are for information and tabulation purposes only. No warranty or guarantee of quantities needed is given or implied. It is understood that the Contractor will furnish the City's needs as they arise. **CONTRACTOR SHALL PROVIDE UNIT PRICE FOR EACH LINE ITEM**					
140	Excavate and expose existing 24-inch reclaimed water pipe having an invert depth of approximately 5.5 feet below grade in the vicinity of 12th Avenue and S. North Lake Drive	1	LS	$	$
141	Excavate and expose existing 24-inch reclaimed water pipe having an invert depth of approximately 7.5 feet below grade in the vicinity of 12th Avenue and Tyler Street	1	LS	$	$
142	Excavate and expose existing 24-inch reclaimed water pipe having an invert depth of approximately 8.5 feet below grade in the vicinity of 12th Avenue and Harrison Street	1	LS	$	$
143	Excavate and expose existing 24-inch reclaimed water pipe having an invert depth of approximately 7.5 feet below grade in the vicinity of 12th Avenue and N. South Lake Drive	1	LS	$	$
144	Install 24-inch liner end seal	1	EA	$	$
145	Install 24-inch pressure coupling	1	EA	$	$
146	Install 24-inch restraint harness	1	EA	$	$
ALLOWANCES					
147	Permit and Fees Allowance	1	EA	$75,000	$75,000
148	Testing Allowance	1	EA	$75,000	$75,000
149	Material / Equipment Supply/Subcontractor Allowance	1	EA	$400,000	$400,000
150	Owner Allowance	1	EA	$200,000	$200,000
151	Indemnification	1	EA	$10	$10

The City is seeking bids/proposals from qualified vendors for the items listed below in accordance with the terms, conditions, and specifications contained in this solicitation. Estimated quantities listed are for information and tabulation purposes only. No warranty or guarantee of quantities needed is given or implied. It is understood that the Contractor will furnish the City's needs as they arise. **CONTRACTOR SHALL PROVIDE UNIT PRICE FOR EACH LINE ITEM**
GRAND TOTAL BASE BID PRICE (FROM BID ITEM NO.1 THROUGH NO. 151): **$**_____
GRAND TOTAL BASE BID PRICE (in words): $_____ _____

NOTES

1. **REFER TO SECTION 01025 FOR ADDITIONAL DESCRIPTION OF BASE BID ITEMS.**

2. **THE CITY WILL EVALUATE THE BID PROPOSALS AND DETERMINE THE LOWEST, RESPONSIVE, RESPONSIBLE BIDDER(S) FOR THE TOTAL BASE BID (ITEMS 1 THROUGH 151). IT IS THE CITY'S INTENT TO AWARD TO MULTIPLE CONTRACTORS FOR THE PROJECT BASED UPON THE TOTAL BASE BID.**

3. **WORK ORDERS FOR ON-CALL AND EMERGENCY REPAIR SERVICES WILL BE ISSUED AS REPAIR WORK IS IDENTIFIED BY THE CITY.**

SECTION 01025 – BASIS OF PAYMENT

PART 1 -- GENERAL

1.01 SCOPE OF WORK

A. Payments to the CONTRACTOR shall be made on the basis of the Bid Proposal as full and complete payment for furnishing all materials, labor, tools and equipment, and for performing all operations necessary to complete the work included in the Contract Documents. Such compensation shall also include payments for any loss or damages arising directly or indirectly from the work, or from any discrepancies between the actual quantities of work and those shown in the Contract Documents, or from any unforeseen difficulties which may be encountered during the prosecution of the work until the final acceptance by the CITY.

B. The prices stated in the Bid Proposal include all costs and expenses for taxes, labor, equipment, materials, commissions, transportation charges and expenses, patent fees and royalties, labor for handling materials during inspection, together with any and all other costs and expenses for performing and completing the work as shown on the details and specified herein. The Basis of Payment for an item at the price shown in the Bid Proposal shall be in accordance with its description of the item in this Section and as related to the work specified. Unit prices will be applied to the actual quantities furnished and installed in conformance with the Contract Documents. The items listed below, refer to and are the same pay items listed in the Bid Proposal. They constitute all of the pay items for the completion of the work. No direct or separate payment will be made for providing miscellaneous temporary or accessory works, services, field offices, layout surveys, job signs, sanitary requirements, testing, safety devices, approval and record drawings, water supplies, power, underground utility locating, maintenance of traffic, site preparation, removal of waste, site cleanup, watchmen, bonds, insurance, mobilization, demobilization, and any other requirements of the General Conditions and Bidding and Contract Requirements. Compensation for all such services, equipment and materials shall be included in the prices stipulated for the unit pay items listed herein.

C. In the event that repairs to laterals, mains, manholes, force mains, utilities, or any other public or private property are required due to damage caused by the CONTRACTOR's operations, the CONTRACTOR shall provide and employ all necessary labor, equipment, and materials, at no additional cost, to complete such repairs in accordance with applicable provisions of these specifications. This shall include but not be limited to materials for repair, if required, including pipe, fittings and specials, pipe bedding, and materials for surface restoration; transportation and handling costs delivered to the work site; any bypass pumping; providing provisional sewers to maintain service; complying with the State of Florida Trench Safety Act, including shoring; removal, transportation and disposal of existing sewer excavation; supporting and protecting existing utilities as required; dewatering; sheeting and shoring, if necessary; furnishing and installing replacement pipe, fittings and repair couplings; unloading material and placing it in the trench; cutting pipe; furnishing and installing joint materials including lubricant; making all connections within the lines to existing sewers, laterals and structures; placing and compacting bedding and backfill; furnishing and installing additional suitable backfill material, if required; furnishing all materials and equipment required to clean and test the sewer; cleaning and testing the sewer; temporary paving installation and removal; permanent paving replacement; replacement of pavement markings as existed before repair; replacing utilities, catch basins, manholes, trees, grass, shrubs, mail boxes, sprinkler systems, concrete or rock bed driveways, sidewalk and all other similar items, to original locations

and to equal or better than original conditions; obtaining and paying for any necessary permits; satisfying all requirements of the permits, and all other appurtenant and miscellaneous items and work including final cleanup

D. The CITY will not provide for disposal of any solids resulting from sewer cleaning. The CONTRACTOR shall obtain permits and make arrangements as required to properly dispose of solids. All solids or semisolids resulting from the cleaning operations shall be removed from the site and disposed of by the CONTRACTOR in a legal and sanitary manner as approved by appropriate authorities, at the CONTRACTOR's cost.

E. Unless otherwise specifically stated elsewhere herein, the CONTRACTOR shall include in the prices bid all materials, electrical supply, fuel, lubricants, temporary equipment, temporary wiring, temporary piping and fittings, pumps, gages, and all other items of whatever nature required to completely test, balance, disinfect if required, and put into fully operational condition all equipment and/or systems supplied by either the CITY or the CONTRACTOR and installed as a part of this Project. Further, any test materials supplied by the CONTRACTOR shall be completely satisfactory to the CITY. Any decision as to whether a particular material is suitable for test purposes shall be at the sole discretion of the Engineer whose decision shall be final. Any material considered not suitable shall be immediately replaced by the CONTRACTOR with suitable material and no extra compensation will be allowed.

F. The Basis of Payment for an item at the price shown in the Proposal shall be in accordance with its description of the item in this Section and as related to the work specified in the standard details and specifications. Unit prices where used will be applied to the actual quantities furnished and installed in conformance with the Contract Documents.

G. CONTRACTOR'S attention is called to the fact that the quotations for the various items of work are intended to obtain a complete and working installation under this Contract, and any items of labor, equipment or materials which may reasonably be assumed as necessary to accomplish this end shall be supplied whether or not they are specifically shown on the Plans or stated herein. Should the CONTRACTOR feel that the cost of any item of work has not been established by the Proposal or Basis of Payment, he shall include the cost for that work in the Bid Item most closely associates with that work so that his proposal for the project does reflect his total price for completing the work in its entirety.

1.04 MEASUREMENT

A. The quantities for payment under this Contract shall be determined by actual measurement of the completed items, in place, ready for service and accepted by the CITY, in accordance with the Bid Proposal as described in Section 00301, unless otherwise specified. The CITY will witness all field measurements.

B. The quantities stated in the Bid Proposal are approximate only and are intended to serve as a basis for the comparison of bids and to fix the approximate amount of the cost of the Project. The CITY does not expressly or impliedly agree that the actual amount of the work to be done in the performance of the contract will correspond with the quantities in the Bid Proposal; the amount of work to be done may be more or less than the said quantities and may be increased or decreased by the CITY as circumstances may require. The increase or decrease of any quantity shall not be regarded as grounds for an increase in the unit price or in the time allowed for the completion of the work, except as provided in the Contract Documents.

1.05 BID PACKAGE 1 - ROUTINE REPAIR SERVICES

A. Items 1 to 3 – Mobilization: Payment shall be at the unit price bid, per mobilization performed, provided in the Bid Proposal and shall include full compensation for all additional labor, materials, equipment and incidentals required to complete mobilization for a routine work order, if so requested by the CITY, in association with any other work under this contract. Payment shall be per mobilization performed based on the value of the work order as per the Proposal Bid Form.

B. Items 4 to 14- Cut & Connect Watermain or Force Main to Existing System (various sizes):

1. Payment for all labor, equipment and material for all work necessary and required for connecting to an existing watermain or force main by cutting in fittings will be based upon the actual number of connections completed and shall constitute full compensation for the complete operation including but not limited to, excavation, de-watering, connection to the existing main, backfill and compaction.

2. Payment for bypass pumping, if required (other than because of damage caused by the CONTRACTOR) will be paid for under “On-Call Routine Work NOT Covered By Other Pay Items” and Allowances.

C. Items 15 to 18 - Abandon in Place: Cut and Grout (various sizes):

1. The unit price bid for abandoning in place, cutting and grouting pipe shall provide full compensation for all work including, but not limited to, furnishing of all labor, equipment and material required for grouting abandoned pipe. All other damage as a result of the CONTRACTOR's operation shall be at the CONTRACTOR's expense. All work to be done in conformance with Contract and City specifications.

2. Payment for grouting abandoned pipe will be made per lineal foot and accepted.

D. Item No. 19 – Furnish and Install Sanitary Service Line on a Private Property: Payment for all labor, equipment and material for all work necessary and required to furnish and install Sanitary (up to 6”) service laterals by a licensed plumber, will be based on the actual number of linear feet installed on private property, all in accordance with the requirements of the Contract Documents and the latest version of the Florida Building Code. Work under this item shall also include: securing a temporary “Right of Entry Permit” from property owner and securing and closing a plumbing permit with the COH Building Department. Payment for furnishing and installing sanitary service laterals will be made at the bid unit price, which shall constitute full compensation for the complete operation including, but not limited to, excavating, dewatering, the complete installation of the service from connecting at cleanout (sewer) to the existing point of connection into the property owners house, , all couplings and fittings, including backfill and compaction, and site restoration, all in accordance with the City of Hollywood Standard Details and specifications.

E. Items 20 – Furnish and Install Water Service Line on Private Property (1-inch thru 2-inch diameter): Payment for all labor, equipment and material for all work necessary and required to furnish and install water service line by a licensed plumber, will be based on the actual number of linear feet installed on private property, all in accordance with the requirements of the Contract Documents, the latest version of the Florida Building Code and all applicable Codes. Work under this item shall also

include: securing a temporary “Right of Entry Permit” from property owner and securing and closing a plumbing permit with the COH Building Department. Payment for furnishing and installing water service line will be made at the bid unit price, which shall constitute full compensation for the complete operation including, but not limited to, excavating, dewatering, the complete installation of the service from connecting at the water meter to the existing point of connection into the property owners house, all couplings and fittings, including backfill and compaction, and site restoration , all in accordance with the City of Hollywood Standard Details and specifications

F. Item 21 to 22 – Furnish and Install Tapping Saddle and Water Service Line on Existing Water Main (various sizes): For furnishing and installing new HDPE domestic water services of diameters 2- inch and smaller (minimum 1-inch), when directed by the ENGINEER, for a complete installation in accordance with the details, plans and specifications, will be paid for at the unit price bid times the number of complete water service assemblies installed and accepted by the ENGINEER. The price bid shall be full compensation for each complete installation, ready for service, and shall include but not be limited to: furnishing and installing double-strap or band service saddles and corporation stops on water mains; furnishing and installing HDPE service tubing of diameters 2-inch and smaller (min. 1-inch) for domestic water services; and all other appurtenant and miscellaneous items and work necessary for a complete installation in accordance with the City of Hollywood Standard details and specifications.

G. Item 23 - Furnish and Install Asphalt Concrete Pavement Patch: Payment for all labor, equipment and material for all work necessary and required for installing asphalt concrete pavement within City of Hollywood Right-of-Way will be based upon the actual number of square yards of final pavement furnished and placed, as detailed in the drawings, all in accordance with the requirement of the Contract Documents. Payment for asphalt concrete pavement will be made at bid unit price per square yard for pavement shall constitute full compensation for the complete operation including, but not limited to, furnishing, placing and compacting all lime rock base course (8-inches minimum and 18-inches maximum), applying a prime coat and furnishing, placing and compacting a 1 1/2 inch (minimum) trench patch. Complete in place to the cross section, thicknesses, and asphalt mix design (FDOT Superpave, S-series, Friction Course, FC-series, or special mix design) shown on the drawings or required by the right-of-way owner. This pay item will include but not be limited to the removal and disposal of existing pavement, grading, temporary striping, and is applicable to either day or nighttime paving operations.

H. Item 24– Mill Asphalt Concrete Pavement (1-inch): Payment for all labor, equipment and material for all work necessary and required for milling of existing asphaltic concrete surface course for permanent asphalt pavement repairs within City of Hollywood Right-of-Way, will be paid for at the unit price bid times the number of square yards (SY) of such surface course milled as required, measured along the curb within the limits defined by the Pavement Restoration Details, and as approved by the CITY. Greater widths are at CONTRACTOR’s option and expense. The price bid shall be full compensation for saw-cutting, furnishing all materials, labor and equipment required. Asphalt cold milling shall be performed using an automated pavement planer capable of maintaining an accurate depth. Cold milling equipment shall meet the approval of the CITY and the governing agency having jurisdiction at the location of the pavement milling operation. The CITY’s word as to the acceptability of the equipment shall be final.

I. Item 25 – Vertical Valve Box Adjustment: Payment for all labor, material and equipment for all work necessary and required to raise or lower existing valve box to existing grade based on established benchmark or reference line. The price bid shall include, but not be limited to the following: initial minimum 12” width excavation around the valve box as required to permit the raising or lowering of

the valve box; PVC extension stem if required; backfill and compaction; grading; site restoration: pavement replacement and road resurfacing. This work shall be measured and paid at the unit price per each valve box adjusted to grade. All road repair work required for a complete installation shall be performed in compliance with applicable standards and in accordance with the CITY's standard details. Prior to performing adjustments CONTRACTOR shall examine the existing valve box for damage or misalignment that would impact adjustment to grade. All damaged or misaligned valves boxes should be reported to the ENGINEER OR ENGINEER'S REPRESENTATIVE, otherwise CONTRACTOR will assume responsibility for the damaged valve box or misalignment.

J. Item 26 – Adjust Manhole Ring Elevation: Payment for all labor, material and equipment for all work necessary and required to raise or lower existing manhole ring to existing grade based on established benchmark or reference line. The price bid shall include, but not be limited to the following: initial minimum 12" width excavation around the manhole as required to permit the raising or lowering of the manhole ring; backfill and compaction; grading; site restoration: pavement replacement; and road resurfacing. This work shall be measured and paid at the unit price per each manhole ring adjusted to grade. All road repair work required for a complete installation shall be performed in compliance with applicable standards and in accordance with the CITY's standard details. Prior to performing adjustments CONTRACTOR shall examine the existing manhole ring for damage or misalignment that would impact adjustment to grade. All damaged or misaligned manhole rings should be reported to the ENGINEER OR ENGINEER'S REPRESENTATIVE, otherwise CONTRACTOR will assume responsibility for the damaged manhole ring or misalignment.

K. Item 27 – Replace Concrete Curb and Gutter – Type F: Payment for all labor, equipment and material for all work necessary and required for the removal and replacement of existing concrete curbs and gutters of all FDOT standard types impacted by the water main or sewer force main trench excavation and will be paid for at the unit price bid times the number of linear feet of concrete curbs and gutters replaced, completed, ready for service and accepted by the CITY, Broward County Public Works and/or FDOT. Replacement of concrete curbs and gutters impacted by the installation and/or reconnection of sewer and water services is included in the unit costs bid for those Pay Items. The price bid shall include, but not be limited to, the following: saw-cutting, removing, hauling, and legally disposing of existing concrete curbs damaged, removed or obliterated by the CONTRACTOR's operation; protecting any existing concrete curbs and gutters to remain; furnishing and installing formwork, concrete, water and admixtures, reinforcing steel, and miscellaneous materials; placing, finishing, curing and protecting the finished concrete surface. Measurement for payment shall be the number of linear feet (LF) lying within the envelope of the utility trench typical section and up to the nearest adjacent control joints. All other replacement due to removal or damage as a result of the CONTRACTOR's operation shall be at the CONTRACTOR's expense.

L. Item 28 – Replace Reflective Pavement Marker (RPM): Payment for all labor, equipment and material for all work necessary and required for the replacement of the reflective pavement marker (RPM) will be based upon the actual number of RPMs replaced, all in accordance with the requirements of the Contract Documents. Payment for the RPM's will be made at the bid unit price. This price shall constitute full compensation for completing said work, including maintenance of traffic and mobilization/demobilization.

M. Item 29 to 32 – Replace Thermoplastic Striping: Payment for all labor, equipment and material for all work necessary and required for the replacement of thermoplastic striping will be based on the actual number of linear feet of such striping replacement, all in accordance with the requirements of the Contract Documents. Payment for the thermoplastic striping will be made at the bid unit price.

This price shall constitute full compensation for completing said work, including maintenance of traffic and mobilization/demobilization.

N. Item 33 – Restoration of Asphalt Driveways: Payment for all labor, equipment and material for all work necessary and required for asphalt driveway restoration will be made at the bid unit price per square yard installed and accepted by CITY. The unit price for Asphalt Driveway Restoration shall provide full compensation for all work including, but not limited to, furnishing of all labor, equipment and material required for cutting, removing, protecting and replacing all existing asphalt driveways removed or damaged under this Contract; limerock base, prime coat, tack coat, asphalt and compaction. Payment will only be made if asphalt driveways are encountered within the "Limits of Construction" as described herein. All other replacement due to removal or damage as a result of the CONTRACTOR's operation shall be at the CONTRACTOR's expense.

O. Item 34 – Restoration of Concrete Driveways: Payment for all labor, equipment and material for all work necessary and required for concrete driveway replacement will be made at the bid unit price per square yard installed and accepted by CITY. The unit price for Concrete Driveway Replacement shall provide full compensation for all work including, but not limited to, furnishing of all labor, equipment and material required for cutting, removing, protecting and replacing all existing concrete driveways removed or damaged under this Contract, concrete, formwork, reinforcing, placing, finishing and curing. Payment will only be made if sidewalks are encountered within the "Limits of Construction" as described herein. All other replacement due to removal or damage as a result of the CONTRACTOR's operation shall be at the CONTRACTOR's expense.

P. Items 35 to 36 – Furnish and Install Sod: Payment for all labor, equipment and material for all work necessary and required for sod replacement will be paid for at the unit price bid and shall provide full compensation for all work including, but not limited to, furnishing all labor, equipment and material required for replacing sod removed or damaged under this Contract. Payment will only be made if sodded areas are encountered within the "Limits of Construction" as described herein. Measurement of payment shall be the number of square yards actually removed and replaced within the Limits of Construction. All other replacement due to removal or damage as a result of the CONTRACTOR's operation shall be at the CONTRACTOR's expense.

Q. Items 37 to 38 - Concrete sidewalk replacement: Payment for all labor, equipment and material for all work necessary and required for concrete sidewalk replacement will be made per square yard installed and accepted by CITY. The unit price bid for Concrete Sidewalk Replacement shall provide full compensation for all work including, but not limited to, furnishing of all labor, equipment and material required for cutting, removing, protecting and replacing all existing concrete sidewalks (full flag) removed or damaged under this Contract, concrete, formwork, reinforcing, placing, finishing and curing. Payment will only be made if sidewalks are encountered within the "Limits of Construction" as described herein. All other replacement due to removal or damage as a result of the CONTRACTOR's operation shall be at the CONTRACTOR's expense.

R. Items 39 – Furnish and Install FDOT No. 89 Stone: Payment for all labor, equipment and material for all work necessary and required for furnishing and installing FDOT No. 89 stone shall be based upon the number of cubic yards of material installed and compacted at the depth indicated, all in accordance with the requirements of the Contract Documents. Payment for FDOT No. 89 stone shall be at the bid unit price, which shall constitute full compensation for the completed work including, but not limited to, all materials, supplies, equipment, labor, transportation, etc. required for complete installation.

S. Items 40 – Furnish and Install Compacted Subgrade: Payment for all labor, equipment and material for all work necessary and required for furnishing and installing subgrade shall be based upon the number of cubic yards of subgrade installed and compacted at the depth indicated, all in accordance with the requirements of the Contract Documents. Payment for furnish and installing subgrade will be made at the bid unit price per cubic yard, which shall constitute full compensation for the complete operation including, but not limited to, handling, cleaning, positioning, compacting, grading, importing fill material and the disposal of excess waste or unsuitable material.

T. Items 41 – Furnish and Install Compacted Limerock Base Course: Payment for all labor, equipment and material for all work necessary and required for furnishing and installing lime rock base course shall be based upon the measured in place number of cubic yards of lime rock base course installed and compacted in place at the depth indicated, all in accordance with the requirements of the Contract Documents. Payment for furnishing and installing lime rock base course shall be made at the bid unit price, which shall constitute full compensation for the completed work including, but not limited to, applying the prime coat, all materials, supplies, equipment, labor, transportation, installation, grading, disposal of waste and unsuitable material.

U. Item 42 – Furnish Maintenance of Traffic (MOT) Plans: Payment for all labor, equipment and material for all work necessary and required for furnishing maintenance of traffic plans for all work within the limits of the project. Payment will be based upon the actual number of drawing sheets furnished, all in accordance with the any local and State regulatory standards and guidelines, including the Florida Department of Transportation. Payment is based on a unit price per each drawing sheet.

V. Items 43 to 47 - Traffic control, various devices: Payment for all labor, equipment and material for all work necessary and required for furnishing and installing traffic control devices will be based upon the actual number of traffic control devices furnished and installed, all in accordance with the specific MOT plan developed for each work order and approved by the City or any other Agency having jurisdiction and the Contract Documents. Payment is based on a unit price per each device or unit price per hour for personnel.

W. Items 48 - Furnish and Install Trench Safety Steel Plates: Payment for all labor, equipment and material for all work necessary and required for furnishing and installing 8'x10' to 8'x20', minimum ASTM A-36 grade steel trench plates will be based upon the actual number of steel plates furnished and installed, all in accordance with any local and State regulatory guidelines, including the FDOT. Payment is based upon a unit price per each metal plate installed.

X. Items 49 to 50 - Flowable Fill: Payment for all labor, equipment and material for all work necessary and required for furnishing, transporting, testing and installing flowable fill within the limits of the project. Payment will be based upon the unit price bid for "non-excavatable flowable fill" and "excavatable flowable fill" for pipe and shall be paid for at the contract unit price per cubic yard. No payment shall be made for material placed outside the neat line limits or outside the adjusted limits, or for unused or wasted material.

Y. Item 51 - Dewatering Using Well Point System, Equal to 25 Well Points: Payment for all labor, permit application, equipment, and material for all work necessary and required for a complete well point system operation required for the work. The Contractor shall attempt to perform the work without a well point system. However, if in the opinion of the City, a well point system is necessary, it will be approved as a pay item. It is the Contractor's responsibility to secure a dewatering permit, implement permit requirements (including installation of treatment tank, if required). Payment is based upon a unit price per each permitted and complete well point system installation (25 well points).

Z. Item 52 - Dewatering Using Submersible Pump: Payment for all labor, permit application, equipment, and material for all work necessary and required for dewatering of the excavated trench up to 40 feet long at each construction location, if required, using up to a 6-inchsubmersible dewatering pump. It is the Contractor's responsibility to secure a dewatering permit, implement permit requirements (including installation of treatment tank, if required). Payment is based upon a unit price per each permitted and complete dewatering system installation.

AA. Items 53 to 74 – Equipment Cost for On-call Routine Work, Not Included in Bid Items A to Z: Payment for additional equipment required to perform routine repair services under special conditions shall be based upon actual days of running time at the job site with operator times the bid unit price per day provided in the Bid Proposal. The price shall include full compensation for furnishing transportation, labor, materials, equipment, tools, supplies, fuel, power, water, essential communications and incidentals necessary to complete the item, all in accordance with the Contract Document. Contractor shall submit a proposal for City's approval, showing equipment and estimated hours to complete work order. ENGINEER OR ENGINEER REPRESENTATIVE (City Inspector) shall inspect Contractor's work and review and approve actual hours worked. CONTRACTOR shall keep the CITY informed of all time periods their equipment works on a project approved under this item.

BB. Items 75 to 81 – Labor Cost for On-call Routine Work, Not Included in Bid Items A to Z: Payment for all labor required to perform routine repair services under special conditions, not included in other bid item, shall be based upon actual hours of labor service times the bid unit price per hour provided in the Bid Proposal. The price shall include full compensation for labor and incidentals necessary to complete the item, all in accordance with the Contract Documents. Contractor shall submit a proposal to City showing estimated crew and hours to complete work order. ENGINEER OR ENGINEER REPRESENTATIVE (City Inspector) shall inspect Contractor's work and review and approve actual hours worked on a daily basis. CONTRACTOR shall keep the CITY informed of all time periods they work on a work order approved under this item, daily in writing.

CC. Items 82 to 88 – Labor (OVERTIME) Cost for On-call Routine Work, Not Included in Bid Items A to Z: Payment for all labor required to perform routine repair services under special conditions, not included in other bid item, shall be based upon actual hours of labor service times the bid unit price per hour provided in the Bid Proposal. The price shall include full compensation for labor and incidentals necessary to complete the item, all in accordance with the Contract Documents. Contractor shall submit a proposal to City showing estimated crew and hours to complete work order. ENGINEER OR ENGINEER REPRESENTATIVE (City Inspector) shall inspect Contractor's work and review and approve actual hours worked, on a daily basis. CONTRACTOR shall keep the CITY informed of all time periods they work on a work order approved under this item, daily in writing.

1.07 BID PACKAGE 2 - EMERGENCY REPAIR SERVICES (Work Requiring Immediate Action)

DD. Item 89 to 92 - Expedited mobilization (Various Timeframes and Work Order Costs): Payment shall be at the unit price bid, per mobilization performed, provided in the Bid Proposal and shall include full compensation for all additional labor, materials, equipment and incidentals required to complete an expedited mobilization, if so requested by the CITY, in association with any other work under this contract. Payment shall be per mobilization performed, where CONTRACTOR shall mobilize and actively initiate the repair work within either four (4) hours or 24 hours of the CITY's request (in accordance with line item description).

EE. Items 93 to 94 Flowable Fill: Payment for all labor, equipment and material for all work necessary and required for furnishing, transporting, testing and installing flowable fill within the limits of the project. Payment will be based upon the unit price bid for “non-excavatable flowable fill” and “excavatable flowable fill” for pipe and shall be paid for at the contract unit price per cubic yard. No payment shall be made for material placed outside the neat line limits or outside the adjusted limits, or for unused or wasted material.

FF. Item 95 – Furnish Maintenance of Traffic (MOT) Plans: Payment for all labor, equipment and material for all work necessary and required for furnishing maintenance of traffic plans for all emergency repair work within the limits of the project. Payment will be based upon the actual number of drawing sheets furnished, all in accordance with the any local and State regulatory standards and guidelines, including the Florida Department of Transportation. Payment is based on a unit price per each drawing sheet.

GG. Items 96 to 100 - Traffic control, various devices: Payment for all labor, equipment and material for all work necessary and required for furnishing and installing traffic control devices required for emergency repair will be based upon the actual number of traffic control devices furnished and installed, all in accordance with the specific MOT plan developed for each work order and approved by the City or any other Agency having jurisdiction and the Contract Documents. Payment is based on a unit price per each device or unit price per hour for personnel.

HH. Items 101– Furnish and Install Steel Traffic Plates: Payment for all labor, equipment and material for all work necessary and required for furnishing and installing 8’x10’ to 8’x20’, minimum ASTM A-36 grade steel trench plates will be based upon the actual number of steel plates furnished and installed, all in accordance with any local and State regulatory guidelines, including the Florida Department of Transportation. Payment is based upon a unit price per each metal plate installed.

II. Item 102 - Dewatering Using Well Point System, Equal to 25 Well Points: Payment for all labor, permit application, equipment, and material for all work necessary and required for a complete well point system operation required for the work. The Contractor shall attempt to perform the work without a well point system. However, if in the opinion of the City, a well point system is necessary, it will be approved as a pay item. It is the Contractor’s responsibility to secure a dewatering permit, implement permit requirements (including installation of treatment tank, if required). Payment is based upon a unit price per each permitted and complete well point system installation (25 well points).

JJ. Item 103 - Dewatering Using Submersible Pump: Payment for all labor, permit application, equipment, and material for all work necessary and required for dewatering of the excavated trench up to 40 feet long at each construction location, if required, using up to a 6-inchsubmersible dewatering pump. It is the Contractor’s responsibility to secure a dewatering permit, implement permit requirements (including installation of treatment tank, if required). Payment is based upon a unit price per each permitted and complete dewatering system installation.

KK. Items 104 to 125 – Equipment Cost for Emergency Work, Not Included in Bid Items DD to JJ: Payment for equipment required to perform emergency repair services shall be based upon actual hours of running time at the job site with operator times the bid unit price per hour provided in the Bid Proposal. The price shall include full compensation for furnishing transportation, labor, materials, equipment, tools, supplies, fuel, power, water, essential communications and incidentals necessary to complete the item, all in accordance with the Contract Document. CONTRACTOR shall keep the

CITY informed of all time periods their equipment works on a project approved under this item. ENGINEER OR ENGINEER REPRESENTATIVE must review and approve all crew.

LL. Items 126 to 132 – Labor Cost for Emergency Work, Not Included in Bid Items DD to JJ: Payment for all labor required to perform emergency repair services, not included in other bid item, shall be based upon actual hours of labor service times the bid unit price per hour provided in the Bid Proposal. The price shall include full compensation for labor and incidentals necessary to complete the item, all in accordance with the Contract Documents. Contractor shall submit a proposal to City showing estimated crew and hours to complete work order. ENGINEER OR ENGINEER REPRESENTATIVE (City Inspector) shall inspect Contractor's work and review and approve actual hours worked, on a daily basis. CONTRACTOR shall keep the CITY informed of all time periods they work on a work order approved under this item, daily, in writing.

MM. Items 133 to 139 – Labor Cost for Emergency Work (Overtime), Not Included in Bid Items DD to JJ: Payment for all labor required to perform emergency repair services, not included in other bid item, shall be based upon actual hours of labor service times the bid unit price per hour provided in the Bid Proposal. The price shall include full compensation for labor and incidentals necessary to complete the item, all in accordance with the Contract Documents. Contractor shall submit a proposal to City showing estimated crew and hours to complete work order. ENGINEER OR ENGINEER REPRESENTATIVE (City Inspector) shall inspect Contractor's work and review and approve actual hours worked, on a daily basis. CONTRACTOR shall keep the CITY informed of all time periods they work on a work order approved under this item, daily, in writing.

1.08 BID PACKAGE NO. 3 – REUSE PIPE REPAIR

NN. Item 140 – Excavate and expose existing 24-inch reclaimed water pipe having an invert depth of approximately 5.5 feet below grade in the vicinity of 12th Avenue and S. North Lake Drive: Payment of the unit price per each shall provide full compensation for all necessary and required labor and equipment to locate and confirm dimensions of previous excavation; provide maintenance of traffic, saw-cut and remove existing asphalt above previous excavation; excavate existing material to expose pipe; comply with the State of Florida Trench Safety Act; support and protect existing utilities as required; perform dewatering, sheeting and shoring, if necessary; remove existing fittings and associated piping to expose existing liner ends; remove and dispose of existing liner end seals; maintain an open excavation up to 20-feet in length while performing work specified under other pay items as applicable; backfill and compact excavation; provide surface restoration and all incidentals to achieve repaired liner end seal complete in place, tested, and ready for use. Installation of liner end seals, couplings, and pipe restraints will be paid for separately.

OO. Item 141 – Excavate and expose existing 24-inch reclaimed water pipe having an invert depth of approximately 7.5 feet below grade in the vicinity of 12th Avenue and Tyler Street: Payment of the unit price per each shall provide full compensation for all necessary and required labor and equipment to locate and confirm dimensions of previous excavation; provide maintenance of traffic, saw-cut and remove existing asphalt above previous excavation; excavate existing material to expose pipe; comply with the State of Florida Trench Safety Act; support and protect existing utilities as required; perform dewatering, sheeting and shoring, if necessary; remove existing fittings and associated piping to expose existing liner ends; remove and dispose of existing liner end seals; maintain an open excavation up to 20-feet in length while performing work specified under other pay items as applicable; backfill and compact excavation; provide surface restoration and all incidentals

to achieve repaired liner end seal complete in place, tested, and ready for use. Installation of liner end seals, couplings, and pipe restraints will be paid for separately.

PP. Item 142 – Excavate and expose existing 24-inch reclaimed water pipe having an invert depth of approximately 8.5 feet below grade in the vicinity of 12th Avenue and Harrison Street: Payment of the unit price per each shall provide full compensation for all necessary and required labor and equipment to locate and confirm dimensions of previous excavation; provide maintenance of traffic, saw-cut and remove existing asphalt above previous excavation; excavate existing material to expose pipe; comply with the State of Florida Trench Safety Act; support and protect existing utilities as required; perform dewatering, sheeting and shoring, if necessary; remove existing fittings and associated piping to expose existing liner ends; remove and dispose of existing liner end seals; maintain an open excavation up to 20-feet in length while performing work specified under other pay items as applicable; backfill and compact excavation; provide surface restoration and all incidentals to achieve repaired liner end seal complete in place, tested, and ready for use. Installation of liner end seals, couplings, and pipe restraints will be paid for separately.

QQ. Item 143 – Excavate and expose existing 24-inch reclaimed water pipe having an invert depth of approximately 7.5 feet below grade in the vicinity of 12th Avenue and N. South Lake Drive: Payment of the unit price per each shall provide full compensation for all necessary and required labor and equipment to locate and confirm dimensions of previous excavation; provide maintenance of traffic, saw-cut and remove existing asphalt above previous excavation; excavate existing material to expose pipe; comply with the State of Florida Trench Safety Act; support and protect existing utilities as required; perform dewatering, sheeting and shoring, if necessary; remove existing fittings and associated piping to expose existing liner ends; remove and dispose of existing liner end seals; maintain an open excavation up to 20-feet in length while performing work specified under other pay items as applicable; backfill and compact excavation; provide surface restoration and all incidentals to achieve repaired liner end seal complete in place, tested, and ready for use. Installation of liner end seals, couplings, and pipe restraints will be paid for separately.

RR. Item 144 – Install 24-inch liner end seal: This work will be measured and paid at the unit price per each seal. Each unit price bid shall include, but not be limited to, all necessary or required labor and expense to procure and install seals at existing liner ends. Preparation of surfaces to be sealed shall be performed per the seal manufacturer's recommendations. Seals must form a water-tight, 360-degree internal seal between the liner end and the adjacent unlined pipe. An acceptable seal is the extra-wide Weko-seal with 316 stainless steel retaining bands, or approved equal.

SS. Item 145 – Install 24-inch pressure coupling: This work will be measured and paid at the unit price per each coupling. Each unit price bid shall include, but not be limited to, all necessary or required labor and expense to procure and install couplings to join lined pipe to adjacent unlined pipe. Preparation of pipe surfaces to be joined shall be performed per the coupling manufacturer's recommendations. Couplings must form a water-tight, 360-degree, pressure-resisting external seal. An acceptable seal is the Hymax Versa high-pressure coupling, or approved equal.

TT. Item 146 – Install 24-inch restraint harness: This work will be measured and paid at the unit price per each restraint harness. Each unit price bid shall include, but not be limited to, all necessary or required labor and expense to procure and install restraint harnesses, to bridge a newly installed pressure coupling and connect lined pipe to adjacent unlined pipe. Preparation of pipe surfaces to be restrained shall be performed per the manufacturer's recommendations. An acceptable restraint harness is the Megalug Series 1100CH, or approved equal.

1.09 ALLOWANCES

UU. Item 147 – Cost Allowance for Permits, Licenses and Fees: The allowance indicated for this item is to pay for all permits, licenses and other fees required of the CONTRACTOR from the various agencies having jurisdiction for construction of the project. The allowance shown on the Bid Proposal is an estimate of fees required. Payment will be based on the actual permit, license or fee paid directly to agency, documented by paid receipts, specifically excluding any labor, mark-up, overhead and profit, administration and other costs involved in obtaining permits or licenses or paying fees. Fees specifically excluded from this allowance include but are not limited to re-inspection fees and expired permit fees. The CITY reserves the right to award any, all, or none of the money associated with this allowance.

VV. Item 148 – Testing Allowance: This allowance shall be used to pay for the first round of field and laboratory tests performed on finished compacted backfill, subgrade and limerock base as required by the Specifications as well as bacteriological testing required for potable water installations. The tests shall be performed by an independent testing laboratory selected by the CITY. Should any test(s) fail, subsequent tests shall be performed by the same testing laboratory and paid for by the CONTRACTOR at no additional cost to the Contract.

WW. Item 149 – Material / Equipment Supply / Subcontractor Allowance: Included in this allowance is payment for all material, subcontractor work and equipment required for furnishing and installing on-call routine and emergency repair work authorized by the CITY as part of work under this Contract and not included in other bid items. All material, subcontractor work and equipment for payment under this allowance will be authorized in writing by the CITY. Contractor will be required to submit with their cost proposal a minimum of three (3) vendor quotations for material, subcontractor work and equipment required to complete the work order and to be paid under this allowance. City will approve the final quotation for work to be performed. Payment shall be based on fully documented invoices, submitted in accordance with the Contract, for material and equipment supplied. Amount to be paid shall be based on final invoices submitted.

XX. Item 150 – Owner Allowance: Included in this allowance is work associated with undefined conditions or conflicts developing from undefined conditions incidental to the work done under this contract. All work authorized for payment will be authorized in writing by the CITY. Amount to be paid per undefined conditions or conflict shall be negotiated or agreed to by both parties. The CITY reserves the right to award any, all, or none of the money associated with this allowance.

YY. Item 151 – Consideration for Indemnification in Accordance with the Supplementary General Conditions: In recognition of the CONTRACTOR'S indemnification obligations, the CITY will pay to the CONTRACTOR the specific consideration of ten dollars ($10.00). Payment of said specific consideration shall be made at the time of the payment of the first progress estimate and the CONTRACTOR shall acknowledge payment of this consideration by letter to the CITY after receipt of the progress payment.

PART 2 -- PRODUCTS (Not Used)

PART 3 -- EXECUTION (Not Used)

- END OF SECTION –

SECTION 00410

APPROVED BID BOND

(Construction)

STATE OF FLORIDA

KNOW ALL MEN BY THESE PRESENTS:
That we_____, as Principal, and_____, as Surety, are held and firmly bound unto the City of Hollywood in the sum of _____ _____Dollars ($_____) lawful money of the United States, amounting to **5%** of the total Bid Price, for the payment of said sum, we bind ourselves, our heirs, executors, administrators, and successors, jointly and severally, firmly by these presents.

THE CONDITION OF THIS OBLIGATION IS SUCH, that whereas the principal has submitted the accompanying bid, dated_____20_____, for

ON-CALL AND EMERGENCY WATER AND SEWER UTILITY REPAIR SERVICES

Bid No.: IFB-4730-22-OT

NOW, THEREFORE, if the principal shall not withdraw said bid within 90 days after date of the same and shall within ten days after the prescribed forms are presented to him for signature, enter into a written contract with the CITY, in accordance with the bid as accepted, and give bond with good and sufficient surety or sureties, and provide the necessary Insurance Certificates as may be required for the faithful performance and proper fulfillment of such Contract, then this obligation shall be null and void.

In the event of the withdrawal of said bid within the specified period, or the failure to enter into such contract and give such bond and insurance within the specified time, the principal and the surety shall pay to the City of Hollywood the difference between the amount specified in said bid and such larger amount for which the City of Hollywood may in good faith contract with another party to perform the work and/or supply the materials covered by said bid.

IN WITNESS WHEREOF, the above bound parties have executed this statement under their several seals this _____day of _____, 20___, the name and corporate seal of each corporate party being hereto affixed and these presents duly signed by its undersigned representative, pursuant to authority of its governing body.

WHEN THE PRINCIPAL IS AN INDIVIDUAL:

Signed, sealed and delivered in the presence of:

_____	_____
Witness	Signature of Individual
_____	
Address	
_____	_____
	Printed Name of Individual

_____

Witness

_____

Address

_____

WHEN THE PRINCIPAL IS A CORPORATION:

Attest:

_____ _____

Secretary Name of Corporation

_____

Business Address

_____

By: _____

(Affix Corporate Seal)

_____

Printed Name

_____

Official Title

CERTIFICATE AS TO CORPORATE PRINCIPAL

I, _____, certify that I am the secretary of the Corporation named as Principal in the attached bond; that _____ _____ who signed the said bond on behalf of the Principal, was then _____ _____ of said Corporation; that I know his signature, and his signature thereto is genuine and that said bond was duly signed, sealed and attested for and on behalf of said Corporation by authority of its governing body.

_____ (SEAL)

Secretary

TO BE EXECUTED BY CORPORATE SURETY:

Attest:

_____ _____

Secretary Corporate Surety

_____

Business Address

_____

BY:

_____

(Affix Corporate Seal)

_____

Attorney-in-Fact

_____

Name of Local Agency

_____

Business Address

_____

STATE OF FLORIDA

Before me, a Notary Public, duly commissioned, qualified and acting, personally appeared, _____ to me well known, who being by me first duly sworn upon oath says that he is the attorney-in-fact for the _____ and that the has been authorized by _____ to execute the forgoing bond on behalf of the CONTRACTOR named therein in favor of the City of Hollywood, Florida. Subscribed and sworn to before me this _____ day of _____, 20___

_____

Notary Public, State of Florida

My Commission Expires:

- END OF SECTION -

ON-CALL AND EMERGENCY WATER AND SEWER UTILITY REPAIR SERVICES
Bid#: IFB-4730-22-OT

Voluntary Pre-Bid Meeting
Minutes

Location: City of Hollywood South Regional Wastewater Treatment Plant
Date and Time: July 7, 2022 @ 3:00 PM

Attendees:

CITY
Otis J. Thomas, Procurement Division
Staci Alli, Procurement Division
Jeff Jiang, Assistant Director ECSD,

Wilhelmina Montero, Project Manager (not present)
Monique Durand, Consultant.

PROSPECTIVE BIDDERS
Hamill Andrade, Ric-man International
Adrian Barrios Diaz, Comtech Engineering, Inc.
Freddy Vargas, Southeastern Engineering Contractors

Key items discussed during the pre-bid meeting are summarized as follows:

1. The City attendees were introduced.

2. The Chief Procurement Services Officer gave an overview of the bidding requirements for the project, including:

    - Bid due date is July 28, 2022 at 3:00 PM EST. No bids will be accepted after 3:00 PM. Bidders responsibility to hand deliver or mail bids to City Clerk.
    - Bid submittal location: City of Hollywood, FL
      City Clerk's Office
      2600 Hollywood Blvd.
      Hollywood, FL 33022-9045
      Suite #221
    - Bids documents can be downloaded at: www.bidsync.com
    - Bid security no less than 5% of Bid amount. City confirmed that electronic bids are not required for this project. All bid bonds will be submitted as hard copy when the Bid package is delivered to the City Clerk's office.
    - Cone of silence is effect for this project
    - Must provide signatures where required
    - Must provide requested information according to bid requirements
    - All responses to questions, minutes for the pre-bid conference, etc. will be included in an addendum. All addenda will be issued via www.bidsync.com
    - Technical questions shall be submitted via www.bidsync.com. Deadline for questions is July 21, 2022 at 5 PM EST.

3. The point of contact for clarifications was identified as:

    - Otis J. Thomas, Senior Purchasing Agent, Email: othomas@hollywoodfl.org
    - Staci Alli, Office Administrator I, Email: salli@hollywoodfl.org

DRAFT

4. City provided a brief overview of the project scope as follows:

   The City of Hollywood Public Utilities Department (Utilities) owns, operates and maintains the water distribution and sewer collection system infrastructure within the City's service area. The Utilities staff is responsible for routine repair and improvements to both systems. In emergency situations (necessitates immediate action), Utilities staff may require additional assistance by an experienced and highly specialized outside contractor.

   The purpose of this solicitation is to identify qualified contractors to provide as-needed on-call or emergency services over the next two years, as described in the Solicitation and Bid Price Schedule. Work to be performed by the successful bidder(s) under this Contract shall consist of furnishing all labor, tools, materials, supplies, machinery, essential communications, equipment, transportation, services and incidentals required for on-call/routine or emergency installation and repair services, including repair and installation of water mains, gravity sewer mains, force mains and appurtenances within the City of Hollywood, as well as any collateral damages, including but not limited to, pavement restoration, sod restoration and related restoration services in a competent, timely and professional manner.

5. City noted intent to select two Contractors for this contract. The City intends to issue Work Orders such that work is alternated between the two successful Contractors. Based on performance and responsiveness, one contractor might be authorized with more work orders.

   All material, subcontractor work and equipment for payment under the Material / Equipment Supply / Subcontractor Allowance will be authorized in writing by the CITY. Contractor will be required to submit with their cost proposal, a minimum of three (3) vendor quotations for material, subcontractor work, and equipment required to complete the work order. City will select/approve the work to be performed

6. City noted that all permits shall be secured by Contractor. Permit fee will be reimbursed by City.

7. City summarized the requirements for qualification and disqualification of bidders as follows:

   The Contract will be awarded only to the responsive and responsible bidder(s), who in the opinion of the Engineer, are fully qualified to undertake the work and are in compliance with the City's Local Preference Criteria (when applicable). The City reserves the right before awarding the Contract to require a bidder to submit such evidence of his/her qualifications as it may deem necessary and may consider any available evidence of his financial status, technical qualifications and other qualifications and abilities.

   Bidders shall submit proof, along with their bid, that their firm has successfully completed comparable projects meeting the following criteria:

   a. The Bidder shall have successfully completed (or on-going) a minimum of three (3) relevant projects demonstrating experience with water and sewer pipe emergency repair work. These projects shall have been performed within the past two (2) years from the date of the Invitation to Bid.

DRAFT

b. Provide at least four (4) verifiable references for projects similar in size and scope or types of work as listed in this solicitation using the attached vendor reference form.
c. Shall be fully qualified and holds the proper Federal, State, County and/or municipal licenses, including but not limited to certificates of competency and occupational licenses to perform the scope of work described in the solicitation.
d. Be properly licensed to perform work as a General Contractor in the State of Florida, Broward County, and the City of Hollywood.
e. Have been a licensed General Contractor in the State of Florida and Broward County under the present name of the organization for the previous ten (10) years (minimum).
f. City is seeking Contractor who shall be available on an emergency basis. Contractor must demonstrate that they own the appropriate equipment and have staff to perform the Work.

8. City noted the completion time for the project. The Bid Documents require substantial completion (defined in the Supplementary General Conditions) as:

Major Milestone	Completion Time (days)*
Substantial Completion	700 days
Project Closeout	30 days after Substantial Completion

Attachments

Sign In Sheet
Meeting Agenda

DRAFT

City of Hollywood

Solicitation No.: IFB-4730-22-OT **Date: 7/5/22**

Solicitation Title: On-Call and Emergency Water and Utility Repair Services
Purpose of Meeting: Pre-Bid Meeting

SIGN-IN SHEET

Your Name	Itamill Andrade
Company Name	Ric-Man International
Address	1545 NW 27 Ave
City/Zip	Pompano Beach FL 33069
Phone	954.426.1042
E-mail	Bid@ric-man.us

Your Name	
Company Name	
Address	
City/Zip	
Phone	
E-mail	

Your Name	Adrian Barrios Diaz
Company Name	Comtech Engineering Inc
Address	7900 SW 57 Ave
City/Zip	South Miami
Phone	305 397 8283
E-mail	Jsierra@comtecheng.com

Your Name	
Company Name	
Address	
City/Zip	
Phone	
E-mail	

Your Name	Freddy Vargas
Company Name	Southeastern Engineering Contractors
Address	911 NW 209th Ave, Suite 101
City/Zip	Pembroke Pines, 33029
Phone	305-557-4226
E-mail	FRED@SOUTHEASTERNENG.COM

Your Name	
Company Name	
Address	
City/Zip	
Phone	
E-mail	

Your Name	
Company Name	
Address	
City/Zip	
Phone	
E-mail	

Your Name	
Company Name	
Address	
City/Zip	
Phone	
E-mail	

City of HOLLYWOOD FLORIDA

PROJECT 20-7112

CITY OF HOLLYWOOD

CONTRACT DOCUMENTS AND SPECIFICATIONS

FOR

ON-CALL AND EMERGENCY WATER AND SEWER UTILITY REPAIR SERVICES

JUNE 2022

Prepared by:

ENGINEERING AND CONSTRUCTION SERVICES DIVISION

1621 N 14th Avenue
PO Box 229045
Hollywood, FL 33022-9045

BID PACKAGE

FOR

ON-CALL AND EMERGENCY WATER AND SEWER UTILITY REPAIR SERVICES

IFB - 4730-22-OT

SUBMITTED BY: _____

June 2022

CITY OF HOLLYWOOD
DEPARTMENT OF PUBLIC UTILITIES

ON-CALL AND EMERGENCY WATER AND SEWER UTILITY REPAIR SERVICES

BID PACKAGE CONTENTS AND REQUIREMENTS

SECTION	TITLE
00030	NOTICE TO BIDDERS
00100	INSTRUCTIONS TO BIDDERS
00200	CONE OF SILENCE
00300	PROPOSAL
00301	PROPOSAL BID FORM
00410	APPROVED BID BOND
00420	INFORMATION REQUIRED FROM BIDDERS
00435	LOCAL PREFERENCE
00495	TRENCH SAFETY FORM

SUBMIT THIS COMPLETE PACKAGE AND ONE COPY WITH YOUR BID

TABLE OF CONTENTS

CITY OF HOLLYWOOD

DEPARTMENT OF PUBLIC UTILITIES

ON-CALL AND EMERGENCY WATER AND SEWER UTILITY REPAIR SERVICES

SECTION	TITLE
DIVISION 0 -	**BIDDING AND CONTRACT REQUIREMENTS**
00030	Notice to Bidders
00100	Instructions to Bidders
00200	Cone of Silence
00300	Proposal
00301	Proposal Bid Form
00410	Approved Bid Bond
00420	Information Required From Bidders
00435	Local Preference
00495	Trench Safety Form
00500	Contract
00610	Performance Bond
00620	Payment Bond
00700	General Conditions
00800	Supplementary General Conditions

DIVISION 1 - GENERAL REQUIREMENTS

01010	Summary of Work
01025	Basis of payment
01090	Applicable Standards and Code
01300	Submittals
01400	Testing and Inspection
01410	Contractor's Health and Safety Plan
01510	Temporary Utility Services and Staging Area
01530	Protection of Existing Facilities
01550	Site Access and Storage
01560	Special Controls
01570	Traffic Regulations and Maintenance of Traffic
01600	Equipment and Materials
01700	Project Closeout
01740	Permits

DIVISION 2 - SITE WORK

02000	Water Distribution System
02050	Water Service Connections and Transfers
02060	Sanitary Sewage
02100	Clearing and Grubbing
02140	Dewatering
02141	Temporary Bypass Pumping Systems
02210	Earth Excavation, Backfill, Fill and Grading
02220	Excavation, Backfill and Compaction
02222	Excavation and Backfill and Compaction for Utilities
02223	Excavation and Backfill and Compaction for Structures
02225	Contaminated Soils and Groundwater
02260	Finish Grading
02332	Limerock Base
02507	Prime and Tack Coats
02510	Asphaltic Concrete Pavement
02526	Concrete Pavement, Curb and Sidewalks
02580	Pavement Marking and Signs

02581 Traffic Signs

02582 Raised Retro-reflective Pavement markers

02930 Sodding

02752 Television Survey

02757 Point Repair Sanitary Sewer

DIVISION 3 - CONCRETE

03290 Joints in Concrete

03315 Grout

03375 Flowable Fill

03400 Precast Concrete

DIVISION 4 - MASONRY (NOT USED)

DIVISION 5 - METALS (NOT USED)

DIVISION 6 - WOOD AND PLASTICS (NOT USED)

DIVISION 7 - THERMAL AND MOISTURE PROTECTION (NOT USED)

DIVISION 8 - DOORS AND WINDOWS (NOT USED)

DIVISION 9 - FINISHES (NOT USED)

DIVISION 10 - SPECIALTIES (NOT USED)

DIVISION 11 – EQUIPMENT (NOT USED)

DIVISION 12 - FURNISHING (NOT USED)

DIVISION 13 - SPECIAL CONSTRUCTION (NOT USED)

DIVISION 14 - CONVEYING SYSTEMS (NOT USED)

DIVISION 15 - MECHANICAL CONSTRUCTION

15000 Piping General

15001 Water, Services and Miscellaneous Fittings

15060 Piping and Fittings

15100 Valves, General
15102 Tapping Sleeves and Tapping Valves
15995 Pipeline Testing and Disinfection
15997 Polyethylene Encasement

DIVISION 16 - ELECTRICAL (NOT USED)

DIVISION 17 - CONTROLS (NOT USED)

SECTION 01010

SUMMARY OF WORK

PART 1 -- GENERAL

1.01 THE REQUIREMENT

A. The work to be performed under this Contract shall consist of furnishing all tools, equipment, materials, supplies, and manufactured articles and for furnishing all transportation and services, including fuel, power, water, and essential communications, and for the performance of all labor, work, or other operations required for the fulfillment of the Contract in strict accordance with the Contract Documents. The work shall be complete, and all work, materials, and services not expressly shown or called for in the Contract documents which may be necessary for the complete and proper construction of the work in good faith shall be performed, furnished, and installed by the CONTRACTOR as though originally so specified or shown, at no increase in cost to the CITY.

B. Prior to construction, the CONTRACTOR shall locate and verify potential existing utilities in their working area. The utility verifications consist of excavation to verify tie-in points and to locate potential conflicts that may affect the work. The CONTRACTOR shall be responsible for the coordination of this work with the associated utility owners and permitting agencies having jurisdiction over the specific locations to be verified

1.02 SCOPE

A. It is the intent of the CITY to select and retain up two (2) qualified contractors to perform as-needed on-call or emergency installation and repair services for a two (2) year term with the option for renewal as per the Contract Documents. CONTRACTORS will be selected based upon qualifications, cost, and their ability to perform the required services during the stipulated contract period.

B. Work shall only be implemented by CONTRACTOR with the prior written approval (Notice to Proceed, Purchase Order or Work Order) from CITY.

C. The Work to be performed consists of furnishing all labor, tools, materials, supplies, machinery, essential communications, equipment, transportation, services and incidentals required for on-call or emergency installation and repair services, including repair and installation of water mains, gravity sewer mains and force mains and appurtenances within the City of Hollywood, as well as any collateral damages, including but not limited to, pavement restoration, sod restoration and related restoration services in a competent, timely and professional manner. The CONTRACTOR shall perform work in accordance with all required permits.

D. All Work shall be completed in accordance with the requirements of the solicitation documents, American Water Works Association standard practices and the City of Hollywood Public Utilities Department “Standard Details, Specifications Policies and

Procedures for Water Distribution and Sewage Collection", all applicable local, state and Federal laws and regulations including the Occupational Safety and Health Act Administration of the U.S. Department of Labor (OSHA), including all costs of permits and cost of regulatory compliance.

E. It is the intent of the CITY to obtain complete and working installations under this contract and any items of labor, materials, services or equipment, which may be reasonably be assumed as necessary to accomplish this end, should be supplied whether or not specifically or described herein. Maintenance of the existing utility systems is mandated throughout the construction period.

F. Upon receipt of any work order, the CONTRACTOR shall evaluate the work site and determine whether any foreseeable item of expense is not covered by a pay item under this contract. If the CONTRACTOR determines that any foreseeable item of expense is not covered by a pay item under this contract, the CONTRACTOR shall notify the CITY of this fact prior to initiation of the associated work and shall await authorization to proceed. In the event that no such prior notification is made and no such prior authorization is received, the CONTRACTOR will not be paid for the expense(s) in question. No after-the-fact change orders will be considered or approved.

G. The Work may also include providing temporary sanitary sewer service of service laterals, bypass pumping or plugging, if needed, and other appurtenant and miscellaneous items and work for a completed project.

H. Work shall be performed to ensure a minimum of traffic disruption, sewer or water service down time as necessary, and work must be coordinated with affected residents and utility personnel. Whenever the property owners' use of the sanitary sewer or water line must be interrupted by the Work, the CONTRACTOR shall notify the residents in advance of the interruption. This notification shall be accomplished with CITY approved notification flyer to be placed at the addresses of affected customers. Property owners shall be informed when service interruption will take place and the approximate duration. This notice shall be provided a minimum of 72 hours in advance of commencement of service interruption, unless otherwise specified. The CONTRACTOR shall make every effort to minimize inconvenience to the public and property owners

I. The CONTRACTOR shall perform all work in strict accordance with all applicable OSHA Standards. Particular attention is drawn to those safety requirements involving man entry in confined spaces. Prior to entering manholes and other confined spaces, the atmosphere shall be evaluated by the CONTRACTOR to determine the presence of toxic, flammable or explosive vapors or lack of oxygen in accordance with local, state, or federal safety regulations. CONTRACTOR shall follow all procedures outlined by OSHA's Confined Space Entry requirements.

J. All WORK shall be completed in compliance with the solicitation documents, American Water Works Association standard practices and the City of Hollywood Public Utilities Department "Standard Details, Specifications Policies and Procedures for Water Distribution and Sewage Collection", all applicable local, state and Federal laws and regulations including the Occupational Safety and Health Act Administration of the U.S.

Department of Labor (OSHA), including all costs of permits and cost of regulatory compliance.

K. It is the intent of the CITY to obtain a complete and working installation under this contract and any items of labor, materials or equipment, which may reasonably be assumed as necessary to accomplish this end, should be supplied whether or not specifically described herein. Maintenance of the existing utility systems is mandated throughout the construction period.

L. Within 30 calendar days of the Contract award, CONTRACTOR shall prepare and submit an Operations and Safety Plan that outlines CONTRACTOR's general approach to responding to requests for emergency work. The Plan shall include the following at a minimum:

- Identify the 24-hour emergency contact person and contact information for notice of emergency work
- Quality assurance and quality control procedures
- Cost control and accountability procedures
- Field supervision and controls
- Equipment and operations safety procedures
- Maintenance of traffic and traffic control procedures
- Fuel supply procedures

M. CONTRACTOR shall comply with the following for emergency repair services:

- Emergency repair services can occur 24 hours a day, seven days a week including weekends and holidays. CONTRACTOR shall provide immediate, rapid and efficient action to mitigate potential damages.

- CONTRACTOR shall be expected to respond to designated site within two (2) hours of receiving emergency repair notification, for the initial review of the situation, unless otherwise determined on a situational basis, throughout the two-year contract period.

- CONTRACTOR shall perform an initial assessment of the problem to determine if an immediate repair is possible. If an immediate repair is not possible, an accurate projection of expected completion must be conveyed to the CITY.

- Contractor shall provide written detailed estimate (based on the unit prices) for the required scope of work detailing the estimated labor hours, a complete list of all parts by noon the following day. Emergency work shall begin immediately and proceed uninterrupted until work is satisfactorily completed, and piping system returned to normal operation.

- CONTRACTOR is responsible for transporting the necessary equipment to the job locations at no expense to the CITY, without delay and within the required response time, causing no delay in services.

- CONTRACTOR shall be responsible for tracking all costs and submitting final invoices and other supporting documentation required for payment of all emergency repair services. Contractor unit prices established under this selection process will determine the total cost of each emergency repair work.

N. CONTRACTOR shall provide CITY with copies of supporting documentation, including written reports, permits, regulatory closeout documents and record drawings for each routine or emergency repair service performed under this contract.

O. The CONTRACTOR shall warrant to the CITY that the equipment used on this Contract where covered by patents or license agreements is furnished in accordance with such agreements and that the prices included herein cover all applicable royalties and fees in accordance with such license agreements. The CONTRACTOR shall defend, indemnify and hold the CITY harmless from and against any and all costs, loss, damage or expense arising out of or in any way connected with any claim of infringement of patent, trademark or violation of license agreement.

1.03 WORK BY OTHERS

A. The CONTRACTOR shall cooperate fully with all utility forces of the CITY, or other public or private agencies engaged in the relocation, altering, or otherwise rearranging any facilities which interfere with the progress of the work, and shall schedule the work so as to minimize interference with said relocation, altering, or rearranging of facilities.

B. The CONTRACTOR'S attention is directed to the fact that work will be conducted at the site by other contractors during the performance of the work under this Contract. The CONTRACTOR shall conduct its operations so as to cause a minimum of interference with the Work of such other contractors, and shall cooperate fully with such contractors to provide continued safe access to their respective portions of the site, as required to perform their respective contracts.

C. When two or more contracts are being executed at one time on the same or adjacent land in such manner that Work on one contract may interfere with that on another, the CITY shall determine the sequence and order of the Work. When the territory of one contract is the necessary or convenient means of access for the execution of another contractor, such privilege of access or any other reasonable privilege may be granted by the CITY to CONTRACTOR. No such decision as to the method or time of conducting the Work or the use of territory shall be made the basis of any claim for delay or damage.

1.04 LOCATION OF THE PROJECT

A. The project is located Citywide.

1.05 CONTRACTOR FURNISHED MATERIAL AND EQUIPMENT

A. All equipment, materials, or devices incorporated in this project shall be new and unused, unless indicated otherwise in the Contract Documents and shall be the products of reliable manufacturers who, unless otherwise specified, have been regularly engaged in the manufacture of such material and equipment for at least five (5) years. Procedures and additional requirements regarding manufacturer's experience and substitutions are included in Section 01300 - Submittals.

1.09 FIELD LAYOUT OF WORK

A. All work under this Contract shall be constructed in accordance with the requirements of each work order or as directed by the CITY. Elevations of existing ground, structures and appurtenances are believed to be reasonably correct but are not guaranteed to be absolute and therefore are presented only as an approximation. Any error or apparent discrepancy in the data shown or omissions of data required for accurately accomplishing the stake-out survey shall be referred immediately to the CITY for interpretation or correction.

B. All survey work for construction control purposes shall be made by the CONTRACTOR at his expense.

C. The CONTRACTOR shall establish all base lines for the location of the principal component parts of the work together with benchmarks and batter boards adjacent to the work. Based upon the information provided by the Contract Drawings, the CONTRACTOR shall develop and make all detail surveys necessary for construction. The CITY will furnish information and location of existing benchmarks.

D. The CONTRACTOR shall have the responsibility to carefully preserve the benchmarks, reference points and stakes. In case of destruction thereof by the CONTRACTOR or resulting from his negligence, he shall be held liable for any expense and damage resulting therefrom and shall be responsible for any mistakes that may be caused by the unnecessary loss or disturbance of such bench marks, reference points and stakes.

E. Existing or new control points, property markers, and monuments that will be established or are destroyed during the normal causes of construction shall be re-established by the CONTRACTOR; and all reference ties recorded therefore shall be furnished to the CITY. All computations necessary to establish the exact position of the work shall be made and preserved by the CONTRACTOR.

F. The CITY may check all or any portion of the work, and the CONTRACTOR shall afford all necessary assistance to the CITY in carrying out such checks. Any necessary corrections to the work shall be performed immediately by the CONTRACTOR and he shall accept all responsibility for the accuracy and completeness of his work.

1.05 CONTRACTOR USE OF PROJECT SITE

A. The CONTRACTOR's use of the project site shall be limited to its construction operations and field offices as applicable. Off-site storage of materials, if required, shall be arranged for by the CONTRACTOR and a copy of an agreement for use of other property shall be furnished to the CITY.

1.06 CITY USE OF THE PROJECT SITE

A. The CITY may utilize all or part of the existing facilities during the entire period of construction for the conduct of the CITY's normal operations. The CONTRACTOR shall cooperate with the CITY to minimize interference with the CONTRACTOR's operations and to facilitate the CITY's operations.

1.07 PARTIAL UTILIZATION OF THE WORK BY CITY

A. The CONTRACTOR is hereby advised that the CITY may accept the responsibility for the maintenance and protection of a specific portion of the project if utilized prior to completion. However, the CONTRACTOR shall retain full responsibility for satisfactory operation of the total project

1.09 SITE CONDITIONS

A. The CONTRACTOR acknowledges that he has investigated prior to bidding and satisfied himself as to the conditions affecting the Work, including but not restricted to those bearing upon transportation, disposal, handling and storage of materials, availability of labor, water, electric power, roads and uncertainties of weather, river stages, tides, water tables or similar physical conditions at the site, the conformation and conditions of the ground, the character of equipment and facilities needed preliminary to and during prosecution of the Work. The CONTRACTOR further acknowledges that he has satisfied himself as to the character, quality and quantity of surface and subsurface materials or obstacles to be encountered insofar as this information is reasonably ascertainable from an inspection of the site, or any contiguous site, as well as from information presented by any Drawings and Specifications made a part of this Contract, or any other information made available to him prior to receipt of Bids. Any failure by the CONTRACTOR to acquaint himself with the available information will not relieve him from responsibility for estimating properly the difficulty or cost of successfully performing the Work. The CITY assumes no responsibility for any conclusions or interpretations made by the CONTRACTOR on the basis of the information made available by the CITY.

B. CONTRACTOR shall also take 4" x 6" color photographs and video tapes to document pre-existing above-ground conditions and shall provide the CITY with a set of photographs, negatives and video tapes. These photographs and tapes may be used for purposes of restoration documentation. Digital photographs supplied on a CD are also acceptable.

1.10 DIFFERING SITE CONDITIONS

A. The CONTRACTOR shall promptly and before such conditions are disturbed, notify the CITY in writing of: (1) subsurface or latent physical conditions at the site differing materially from those indicated in this contract, or (2) unknown physical conditions at the site, of an unusual nature, differing materially from those ordinarily encountered and generally recognized as inherent in work of the character provided for this contract. The CITY will promptly investigate the conditions, and if he finds that such conditions do materially so differ and cause an increase or decrease in the CONTRACTOR's cost of, or the time required for, performance of any part of the work under this contract, whether or not changed as a result of such conditions, an equitable adjustment shall be made and the contract modified in writing accordingly.

B. No claim of the CONTRACTOR under this clause shall be allowed unless the CONTRACTOR has given the notice required in Paragraph A.

C. No claim by the CONTRACTOR for an equitable adjustment hereunder shall be allowed if asserted after final payment under this contract.

1.11 ALTERNATE BID ITEMS

A. The CONTRACTOR is referred to Section 01025 for the description of Alternate Bid items for specific repairs to the 24-in Reclaimed Water force main included herein. A repair detail and As-Built drawings for pertinent portions of the force main are included in Appendix D.

PART 2 -- PRODUCTS (Not Used)

PART 3 -- EXECUTION (Not Used)

- END OF SECTION -

SECTION 01025 – BASIS OF PAYMENT

PART 1 -- GENERAL

1.01 SCOPE OF WORK

A. Payments to the CONTRACTOR shall be made on the basis of the Bid Proposal as full and complete payment for furnishing all materials, labor, tools and equipment, and for performing all operations necessary to complete the work included in the Contract Documents. Such compensation shall also include payments for any loss or damages arising directly or indirectly from the work, or from any discrepancies between the actual quantities of work and those shown in the Contract Documents, or from any unforeseen difficulties which may be encountered during the prosecution of the work until the final acceptance by the CITY.

B. The prices stated in the Bid Proposal include all costs and expenses for taxes, labor, equipment, materials, commissions, transportation charges and expenses, patent fees and royalties, labor for handling materials during inspection, together with any and all other costs and expenses for performing and completing the work as shown on the details and specified herein. The Basis of Payment for an item at the price shown in the Bid Proposal shall be in accordance with its description of the item in this Section and as related to the work specified. Unit prices will be applied to the actual quantities furnished and installed in conformance with the Contract Documents. The items listed below, refer to and are the same pay items listed in the Bid Proposal. They constitute all of the pay items for the completion of the work. No direct or separate payment will be made for providing miscellaneous temporary or accessory works, services, field offices, layout surveys, job signs, sanitary requirements, testing, safety devices, approval and record drawings, water supplies, power, underground utility locating, maintenance of traffic, site preparation, removal of waste, site cleanup, watchmen, bonds, insurance, mobilization, demobilization, and any other requirements of the General Conditions and Bidding and Contract Requirements. Compensation for all such services, equipment and materials shall be included in the prices stipulated for the unit pay items listed herein.

C. In the event that repairs to laterals, mains, manholes, force mains, utilities, or any other public or private property are required due to damage caused by the CONTRACTOR's operations, the CONTRACTOR shall provide and employ all necessary labor, equipment, and materials, at no additional cost, to complete such repairs in accordance with applicable provisions of these specifications. This shall include but not be limited to materials for repair, if required, including pipe, fittings and specials, pipe bedding, and materials for surface restoration; transportation and handling costs delivered to the work site; any bypass pumping; providing provisional sewers to maintain service; complying with the State of Florida Trench Safety Act, including shoring; removal, transportation and disposal of existing sewer excavation; supporting and protecting existing utilities as required; dewatering; sheeting and shoring, if necessary; furnishing and installing replacement pipe, fittings and repair couplings; unloading material and placing it in the trench; cutting pipe; furnishing and installing joint materials including lubricant; making all connections within the lines to existing sewers, laterals and structures; placing and compacting bedding and backfill; furnishing and installing additional suitable backfill material, if required; furnishing all materials and equipment required to clean and test the sewer; cleaning and testing the sewer; temporary paving installation and removal; permanent paving replacement; replacement of pavement markings as existed before repair; replacing utilities, catch basins, manholes, trees, grass, shrubs, mail boxes, sprinkler systems, concrete or rock bed driveways, sidewalk and all other similar items, to original locations

and to equal or better than original conditions; obtaining and paying for any necessary permits; satisfying all requirements of the permits, and all other appurtenant and miscellaneous items and work including final cleanup

D. The CITY will not provide for disposal of any solids resulting from sewer cleaning. The CONTRACTOR shall obtain permits and make arrangements as required to properly dispose of solids. All solids or semisolids resulting from the cleaning operations shall be removed from the site and disposed of by the CONTRACTOR in a legal and sanitary manner as approved by appropriate authorities, at the CONTRACTOR's cost.

E. Unless otherwise specifically stated elsewhere herein, the CONTRACTOR shall include in the prices bid all materials, electrical supply, fuel, lubricants, temporary equipment, temporary wiring, temporary piping and fittings, pumps, gages, and all other items of whatever nature required to completely test, balance, disinfect if required, and put into fully operational condition all equipment and/or systems supplied by either the CITY or the CONTRACTOR and installed as a part of this Project. Further, any test materials supplied by the CONTRACTOR shall be completely satisfactory to the CITY. Any decision as to whether a particular material is suitable for test purposes shall be at the sole discretion of the Engineer whose decision shall be final. Any material considered not suitable shall be immediately replaced by the CONTRACTOR with suitable material and no extra compensation will be allowed.

F. The Basis of Payment for an item at the price shown in the Proposal shall be in accordance with its description of the item in this Section and as related to the work specified in the standard details and specifications. Unit prices where used will be applied to the actual quantities furnished and installed in conformance with the Contract Documents.

G. CONTRACTOR'S attention is called to the fact that the quotations for the various items of work are intended to obtain a complete and working installation under this Contract, and any items of labor, equipment or materials which may reasonably be assumed as necessary to accomplish this end shall be supplied whether or not they are specifically shown on the Plans or stated herein. Should the CONTRACTOR feel that the cost of any item of work has not been established by the Proposal or Basis of Payment, he shall include the cost for that work in the Bid Item most closely associates with that work so that his proposal for the project does reflect his total price for completing the work in its entirety.

1.04 MEASUREMENT

A. The quantities for payment under this Contract shall be determined by actual measurement of the completed items, in place, ready for service and accepted by the CITY, in accordance with the Bid Proposal as described in Section 00301, unless otherwise specified. The CITY will witness all field measurements.

B. The quantities stated in the Bid Proposal are approximate only and are intended to serve as a basis for the comparison of bids and to fix the approximate amount of the cost of the Project. The CITY does not expressly or impliedly agree that the actual amount of the work to be done in the performance of the contract will correspond with the quantities in the Bid Proposal; the amount of work to be done may be more or less than the said quantities and may be increased or decreased by the CITY as circumstances may require. The increase or decrease of any quantity shall not be regarded as grounds for an increase in the unit price or in the time allowed for the completion of the work, except as provided in the Contract Documents.

1.05 BID PACKAGE 1 - ROUTINE REPAIR SERVICES

A. Items 1 to 3 – Mobilization: Payment shall be at the unit price bid, per mobilization performed, provided in the Bid Proposal and shall include full compensation for all additional labor, materials, equipment and incidentals required to complete mobilization for a routine work order, if so requested by the CITY, in association with any other work under this contract. Payment shall be per mobilization performed based on the value of the work order as per the Proposal Bid Form.

B. Items 4 to 14- Cut & Connect Watermain or Force Main to Existing System (various sizes):

1. Payment for all labor, equipment and material for all work necessary and required for connecting to an existing watermain or force main by cutting in fittings will be based upon the actual number of connections completed and shall constitute full compensation for the complete operation including but not limited to, excavation, de-watering, connection to the existing main, backfill and compaction.

2. Payment for bypass pumping, if required (other than because of damage caused by the CONTRACTOR) will be paid for under “On-Call Routine Work NOT Covered By Other Pay Items” and Allowances.

C. Items 15 to 18 - Abandon in Place: Cut and Grout (various sizes):

1. The unit price bid for abandoning in place, cutting and grouting pipe shall provide full compensation for all work including, but not limited to, furnishing of all labor, equipment and material required for grouting abandoned pipe. All other damage as a result of the CONTRACTOR's operation shall be at the CONTRACTOR's expense. All work to be done in conformance with Contract and City specifications.

2. Payment for grouting abandoned pipe will be made per lineal foot and accepted.

D. Item No. 19 – Furnish and Install Sanitary Service Line on a Private Property: Payment for all labor, equipment and material for all work necessary and required to furnish and install Sanitary (up to 6”) service laterals by a licensed plumber, will be based on the actual number of linear feet installed on private property, all in accordance with the requirements of the Contract Documents and the latest version of the Florida Building Code. Work under this item shall also include: securing a temporary “Right of Entry Permit” from property owner and securing and closing a plumbing permit with the COH Building Department. Payment for furnishing and installing sanitary service laterals will be made at the bid unit price, which shall constitute full compensation for the complete operation including, but not limited to, excavating, dewatering, the complete installation of the service from connecting at cleanout (sewer) to the existing point of connection into the property owners house, , all couplings and fittings, including backfill and compaction, and site restoration, all in accordance with the City of Hollywood Standard Details and specifications.

E. Items 20 – Furnish and Install Water Service Line on Private Property (1-inch thru 2-inch diameter): Payment for all labor, equipment and material for all work necessary and required to furnish and install water service line by a licensed plumber, will be based on the actual number of linear feet installed on private property, all in accordance with the requirements of the Contract Documents, the latest version of the Florida Building Code and all applicable Codes. Work under this item shall also

include: securing a temporary “Right of Entry Permit” from property owner and securing and closing a plumbing permit with the COH Building Department. Payment for furnishing and installing water service line will be made at the bid unit price, which shall constitute full compensation for the complete operation including, but not limited to, excavating, dewatering, the complete installation of the service from connecting at the water meter to the existing point of connection into the property owners house, all couplings and fittings, including backfill and compaction, and site restoration , all in accordance with the City of Hollywood Standard Details and specifications

F. Item 21 to 22 – Furnish and Install Tapping Saddle and Water Service Line on Existing Water Main (various sizes): For furnishing and installing new HDPE domestic water services of diameters 2- inch and smaller (minimum 1-inch), when directed by the ENGINEER, for a complete installation in accordance with the details, plans and specifications, will be paid for at the unit price bid times the number of complete water service assemblies installed and accepted by the ENGINEER. The price bid shall be full compensation for each complete installation, ready for service, and shall include but not be limited to: furnishing and installing double-strap or band service saddles and corporation stops on water mains; furnishing and installing HDPE service tubing of diameters 2-inch and smaller (min. 1-inch) for domestic water services; and all other appurtenant and miscellaneous items and work necessary for a complete installation in accordance with the City of Hollywood Standard details and specifications.

G. Item 23 - Furnish and Install Asphalt Concrete Pavement Patch: Payment for all labor, equipment and material for all work necessary and required for installing asphalt concrete pavement within City of Hollywood Right-of-Way will be based upon the actual number of square yards of final pavement furnished and placed, as detailed in the drawings, all in accordance with the requirement of the Contract Documents. Payment for asphalt concrete pavement will be made at bid unit price per square yard for pavement shall constitute full compensation for the complete operation including, but not limited to, furnishing, placing and compacting all lime rock base course (8-inches minimum and 18-inches maximum), applying a prime coat and furnishing, placing and compacting a 1 1/2 inch (minimum) trench patch. Complete in place to the cross section, thicknesses, and asphalt mix design (FDOT Superpave, S-series, Friction Course, FC-series, or special mix design) shown on the drawings or required by the right-of-way owner. This pay item will include but not be limited to the removal and disposal of existing pavement, grading, temporary striping, and is applicable to either day or nighttime paving operations.

H. Item 24– Mill Asphalt Concrete Pavement (1-inch): Payment for all labor, equipment and material for all work necessary and required for milling of existing asphaltic concrete surface course for permanent asphalt pavement repairs within City of Hollywood Right-of-Way, will be paid for at the unit price bid times the number of square yards (SY) of such surface course milled as required, measured along the curb within the limits defined by the Pavement Restoration Details, and as approved by the CITY. Greater widths are at CONTRACTOR’s option and expense. The price bid shall be full compensation for saw-cutting, furnishing all materials, labor and equipment required. Asphalt cold milling shall be performed using an automated pavement planer capable of maintaining an accurate depth. Cold milling equipment shall meet the approval of the CITY and the governing agency having jurisdiction at the location of the pavement milling operation. The CITY’s word as to the acceptability of the equipment shall be final.

I. Item 25 – Vertical Valve Box Adjustment: Payment for all labor, material and equipment for all work necessary and required to raise or lower existing valve box to existing grade based on established benchmark or reference line. The price bid shall include, but not be limited to the following: initial minimum 12” width excavation around the valve box as required to permit the raising or lowering of

the valve box; PVC extension stem if required; backfill and compaction; grading; site restoration: pavement replacement and road resurfacing. This work shall be measured and paid at the unit price per each valve box adjusted to grade. All road repair work required for a complete installation shall be performed in compliance with applicable standards and in accordance with the CITY's standard details. Prior to performing adjustments CONTRACTOR shall examine the existing valve box for damage or misalignment that would impact adjustment to grade. All damaged or misaligned valves boxes should be reported to the ENGINEER OR ENGINEER'S REPRESENTATIVE, otherwise CONTRACTOR will assume responsibility for the damaged valve box or misalignment.

J. Item 26 – Adjust Manhole Ring Elevation: Payment for all labor, material and equipment for all work necessary and required to raise or lower existing manhole ring to existing grade based on established benchmark or reference line. The price bid shall include, but not be limited to the following: initial minimum 12" width excavation around the manhole as required to permit the raising or lowering of the manhole ring; backfill and compaction; grading; site restoration: pavement replacement; and road resurfacing. This work shall be measured and paid at the unit price per each manhole ring adjusted to grade. All road repair work required for a complete installation shall be performed in compliance with applicable standards and in accordance with the CITY's standard details. Prior to performing adjustments CONTRACTOR shall examine the existing manhole ring for damage or misalignment that would impact adjustment to grade. All damaged or misaligned manhole rings should be reported to the ENGINEER OR ENGINEER'S REPRESENTATIVE, otherwise CONTRACTOR will assume responsibility for the damaged manhole ring or misalignment.

K. Item 27 – Replace Concrete Curb and Gutter – Type F: Payment for all labor, equipment and material for all work necessary and required for the removal and replacement of existing concrete curbs and gutters of all FDOT standard types impacted by the water main or sewer force main trench excavation and will be paid for at the unit price bid times the number of linear feet of concrete curbs and gutters replaced, completed, ready for service and accepted by the CITY, Broward County Public Works and/or FDOT. Replacement of concrete curbs and gutters impacted by the installation and/or reconnection of sewer and water services is included in the unit costs bid for those Pay Items. The price bid shall include, but not be limited to, the following: saw-cutting, removing, hauling, and legally disposing of existing concrete curbs damaged, removed or obliterated by the CONTRACTOR's operation; protecting any existing concrete curbs and gutters to remain; furnishing and installing formwork, concrete, water and admixtures, reinforcing steel, and miscellaneous materials; placing, finishing, curing and protecting the finished concrete surface. Measurement for payment shall be the number of linear feet (LF) lying within the envelope of the utility trench typical section and up to the nearest adjacent control joints. All other replacement due to removal or damage as a result of the CONTRACTOR's operation shall be at the CONTRACTOR's expense.

L. Item 28 – Replace Reflective Pavement Marker (RPM): Payment for all labor, equipment and material for all work necessary and required for the replacement of the reflective pavement marker (RPM) will be based upon the actual number of RPMs replaced, all in accordance with the requirements of the Contract Documents. Payment for the RPM's will be made at the bid unit price. This price shall constitute full compensation for completing said work, including maintenance of traffic and mobilization/demobilization.

M. Item 29 to 32 – Replace Thermoplastic Striping: Payment for all labor, equipment and material for all work necessary and required for the replacement of thermoplastic striping will be based on the actual number of linear feet of such striping replacement, all in accordance with the requirements of the Contract Documents. Payment for the thermoplastic striping will be made at the bid unit price.

This price shall constitute full compensation for completing said work, including maintenance of traffic and mobilization/demobilization.

N. Item 33 – Restoration of Asphalt Driveways: Payment for all labor, equipment and material for all work necessary and required for asphalt driveway restoration will be made at the bid unit price per square yard installed and accepted by CITY. The unit price for Asphalt Driveway Restoration shall provide full compensation for all work including, but not limited to, furnishing of all labor, equipment and material required for cutting, removing, protecting and replacing all existing asphalt driveways removed or damaged under this Contract; limerock base, prime coat, tack coat, asphalt and compaction. Payment will only be made if asphalt driveways are encountered within the "Limits of Construction" as described herein. All other replacement due to removal or damage as a result of the CONTRACTOR's operation shall be at the CONTRACTOR's expense.

O. Item 34 – Restoration of Concrete Driveways: Payment for all labor, equipment and material for all work necessary and required for concrete driveway replacement will be made at the bid unit price per square yard installed and accepted by CITY. The unit price for Concrete Driveway Replacement shall provide full compensation for all work including, but not limited to, furnishing of all labor, equipment and material required for cutting, removing, protecting and replacing all existing concrete driveways removed or damaged under this Contract, concrete, formwork, reinforcing, placing, finishing and curing. Payment will only be made if sidewalks are encountered within the "Limits of Construction" as described herein. All other replacement due to removal or damage as a result of the CONTRACTOR's operation shall be at the CONTRACTOR's expense.

P. Items 35 to 36 – Furnish and Install Sod: Payment for all labor, equipment and material for all work necessary and required for sod replacement will be paid for at the unit price bid and shall provide full compensation for all work including, but not limited to, furnishing all labor, equipment and material required for replacing sod removed or damaged under this Contract. Payment will only be made if sodded areas are encountered within the "Limits of Construction" as described herein. Measurement of payment shall be the number of square yards actually removed and replaced within the Limits of Construction. All other replacement due to removal or damage as a result of the CONTRACTOR's operation shall be at the CONTRACTOR's expense.

Q. Items 37 to 38 - Concrete sidewalk replacement: Payment for all labor, equipment and material for all work necessary and required for concrete sidewalk replacement will be made per square yard installed and accepted by CITY. The unit price bid for Concrete Sidewalk Replacement shall provide full compensation for all work including, but not limited to, furnishing of all labor, equipment and material required for cutting, removing, protecting and replacing all existing concrete sidewalks (full flag) removed or damaged under this Contract, concrete, formwork, reinforcing, placing, finishing and curing. Payment will only be made if sidewalks are encountered within the "Limits of Construction" as described herein. All other replacement due to removal or damage as a result of the CONTRACTOR's operation shall be at the CONTRACTOR's expense.

R. Items 39 – Furnish and Install FDOT No. 89 Stone: Payment for all labor, equipment and material for all work necessary and required for furnishing and installing FDOT No. 89 stone shall be based upon the number of cubic yards of material installed and compacted at the depth indicated, all in accordance with the requirements of the Contract Documents. Payment for FDOT No. 89 stone shall be at the bid unit price, which shall constitute full compensation for the completed work including, but not limited to, all materials, supplies, equipment, labor, transportation, etc. required for complete installation.

S. Items 40 – Furnish and Install Compacted Subgrade: Payment for all labor, equipment and material for all work necessary and required for furnishing and installing subgrade shall be based upon the number of cubic yards of subgrade installed and compacted at the depth indicated, all in accordance with the requirements of the Contract Documents. Payment for furnish and installing subgrade will be made at the bid unit price per cubic yard, which shall constitute full compensation for the complete operation including, but not limited to, handling, cleaning, positioning, compacting, grading, importing fill material and the disposal of excess waste or unsuitable material.

T. Items 41 – Furnish and Install Compacted Limerock Base Course: Payment for all labor, equipment and material for all work necessary and required for furnishing and installing lime rock base course shall be based upon the measured in place number of cubic yards of lime rock base course installed and compacted in place at the depth indicated, all in accordance with the requirements of the Contract Documents. Payment for furnishing and installing lime rock base course shall be made at the bid unit price, which shall constitute full compensation for the completed work including, but not limited to, applying the prime coat, all materials, supplies, equipment, labor, transportation, installation, grading, disposal of waste and unsuitable material.

U. Item 42 – Furnish Maintenance of Traffic (MOT) Plans: Payment for all labor, equipment and material for all work necessary and required for furnishing maintenance of traffic plans for all work within the limits of the project. Payment will be based upon the actual number of drawing sheets furnished, all in accordance with the any local and State regulatory standards and guidelines, including the Florida Department of Transportation. Payment is based on a unit price per each drawing sheet.

V. Items 43 to 47 - Traffic control, various devices: Payment for all labor, equipment and material for all work necessary and required for furnishing and installing traffic control devices will be based upon the actual number of traffic control devices furnished and installed, all in accordance with the specific MOT plan developed for each work order and approved by the City or any other Agency having jurisdiction and the Contract Documents. Payment is based on a unit price per each device or unit price per hour for personnel.

W. Items 48 - Furnish and Install Trench Safety Steel Plates: Payment for all labor, equipment and material for all work necessary and required for furnishing and installing 8'x10' to 8'x20', minimum ASTM A-36 grade steel trench plates will be based upon the actual number of steel plates furnished and installed, all in accordance with any local and State regulatory guidelines, including the FDOT. Payment is based upon a unit price per each metal plate installed.

X. Items 49 to 50 - Flowable Fill: Payment for all labor, equipment and material for all work necessary and required for furnishing, transporting, testing and installing flowable fill within the limits of the project. Payment will be based upon the unit price bid for "non-excavatable flowable fill" and "excavatable flowable fill" for pipe and shall be paid for at the contract unit price per cubic yard. No payment shall be made for material placed outside the neat line limits or outside the adjusted limits, or for unused or wasted material.

Y. Item 51 - Dewatering Using Well Point System, Equal to 25 Well Points: Payment for all labor, permit application, equipment, and material for all work necessary and required for a complete well point system operation required for the work. The Contractor shall attempt to perform the work without a well point system. However, if in the opinion of the City, a well point system is necessary, it will be approved as a pay item. It is the Contractor's responsibility to secure a dewatering permit, implement permit requirements (including installation of treatment tank, if required). Payment is based upon a unit price per each permitted and complete well point system installation (25 well points).

Z. Item 52 - Dewatering Using Submersible Pump: Payment for all labor, permit application, equipment, and material for all work necessary and required for dewatering of the excavated trench up to 40 feet long at each construction location, if required, using up to a 6-inchsubmersible dewatering pump. It is the Contractor's responsibility to secure a dewatering permit, implement permit requirements (including installation of treatment tank, if required). Payment is based upon a unit price per each permitted and complete dewatering system installation.

AA. Items 53 to 74 – Equipment Cost for On-call Routine Work, Not Included in Bid Items A to Z: Payment for additional equipment required to perform routine repair services under special conditions shall be based upon actual days of running time at the job site with operator times the bid unit price per day provided in the Bid Proposal. The price shall include full compensation for furnishing transportation, labor, materials, equipment, tools, supplies, fuel, power, water, essential communications and incidentals necessary to complete the item, all in accordance with the Contract Document. Contractor shall submit a proposal for City's approval, showing equipment and estimated hours to complete work order. ENGINEER OR ENGINEER REPRESENTATIVE (City Inspector) shall inspect Contractor's work and review and approve actual hours worked. CONTRACTOR shall keep the CITY informed of all time periods their equipment works on a project approved under this item.

BB. Items 75 to 81 – Labor Cost for On-call Routine Work, Not Included in Bid Items A to Z: Payment for all labor required to perform routine repair services under special conditions, not included in other bid item, shall be based upon actual hours of labor service times the bid unit price per hour provided in the Bid Proposal. The price shall include full compensation for labor and incidentals necessary to complete the item, all in accordance with the Contract Documents. Contractor shall submit a proposal to City showing estimated crew and hours to complete work order. ENGINEER OR ENGINEER REPRESENTATIVE (City Inspector) shall inspect Contractor's work and review and approve actual hours worked on a daily basis. CONTRACTOR shall keep the CITY informed of all time periods they work on a work order approved under this item, daily in writing.

CC. Items 82 to 88 – Labor (OVERTIME) Cost for On-call Routine Work, Not Included in Bid Items A to Z: Payment for all labor required to perform routine repair services under special conditions, not included in other bid item, shall be based upon actual hours of labor service times the bid unit price per hour provided in the Bid Proposal. The price shall include full compensation for labor and incidentals necessary to complete the item, all in accordance with the Contract Documents. Contractor shall submit a proposal to City showing estimated crew and hours to complete work order. ENGINEER OR ENGINEER REPRESENTATIVE (City Inspector) shall inspect Contractor's work and review and approve actual hours worked, on a daily basis. CONTRACTOR shall keep the CITY informed of all time periods they work on a work order approved under this item, daily in writing.

1.07 BID PACKAGE 2 - EMERGENCY REPAIR SERVICES (Work Requiring Immediate Action)

DD. Item 89 to 92 - Expedited mobilization (Various Timeframes and Work Order Costs): Payment shall be at the unit price bid, per mobilization performed, provided in the Bid Proposal and shall include full compensation for all additional labor, materials, equipment and incidentals required to complete an expedited mobilization, if so requested by the CITY, in association with any other work under this contract. Payment shall be per mobilization performed, where CONTRACTOR shall mobilize and actively initiate the repair work within either four (4) hours or 24 hours of the CITY's request (in accordance with line item description).

EE. Items 93 to 94 Flowable Fill: Payment for all labor, equipment and material for all work necessary and required for furnishing, transporting, testing and installing flowable fill within the limits of the project. Payment will be based upon the unit price bid for “non-excavatable flowable fill” and “excavatable flowable fill” for pipe and shall be paid for at the contract unit price per cubic yard. No payment shall be made for material placed outside the neat line limits or outside the adjusted limits, or for unused or wasted material.

FF. Item 95 – Furnish Maintenance of Traffic (MOT) Plans: Payment for all labor, equipment and material for all work necessary and required for furnishing maintenance of traffic plans for all emergency repair work within the limits of the project. Payment will be based upon the actual number of drawing sheets furnished, all in accordance with the any local and State regulatory standards and guidelines, including the Florida Department of Transportation. Payment is based on a unit price per each drawing sheet.

GG. Items 96 to 100 - Traffic control, various devices: Payment for all labor, equipment and material for all work necessary and required for furnishing and installing traffic control devices required for emergency repair will be based upon the actual number of traffic control devices furnished and installed, all in accordance with the specific MOT plan developed for each work order and approved by the City or any other Agency having jurisdiction and the Contract Documents. Payment is based on a unit price per each device or unit price per hour for personnel.

HH. Items 101– Furnish and Install Steel Traffic Plates: Payment for all labor, equipment and material for all work necessary and required for furnishing and installing 8’x10’ to 8’x20’, minimum ASTM A-36 grade steel trench plates will be based upon the actual number of steel plates furnished and installed, all in accordance with any local and State regulatory guidelines, including the Florida Department of Transportation. Payment is based upon a unit price per each metal plate installed.

II. Item 102 - Dewatering Using Well Point System, Equal to 25 Well Points: Payment for all labor, permit application, equipment, and material for all work necessary and required for a complete well point system operation required for the work. The Contractor shall attempt to perform the work without a well point system. However, if in the opinion of the City, a well point system is necessary, it will be approved as a pay item. It is the Contractor’s responsibility to secure a dewatering permit, implement permit requirements (including installation of treatment tank, if required). Payment is based upon a unit price per each permitted and complete well point system installation (25 well points).

JJ. Item 103 - Dewatering Using Submersible Pump: Payment for all labor, permit application, equipment, and material for all work necessary and required for dewatering of the excavated trench up to 40 feet long at each construction location, if required, using up to a 6-inchsubmersible dewatering pump. It is the Contractor’s responsibility to secure a dewatering permit, implement permit requirements (including installation of treatment tank, if required). Payment is based upon a unit price per each permitted and complete dewatering system installation.

KK. Items 104 to 125 – Equipment Cost for Emergency Work, Not Included in Bid Items DD to JJ: Payment for equipment required to perform emergency repair services shall be based upon actual hours of running time at the job site with operator times the bid unit price per hour provided in the Bid Proposal. The price shall include full compensation for furnishing transportation, labor, materials, equipment, tools, supplies, fuel, power, water, essential communications and incidentals necessary to complete the item, all in accordance with the Contract Document. CONTRACTOR shall keep the

CITY informed of all time periods their equipment works on a project approved under this item. ENGINEER OR ENGINEER REPRESENTATIVE must review and approve all crew.

LL. Items 126 to 132 – Labor Cost for Emergency Work, Not Included in Bid Items DD to JJ: Payment for all labor required to perform emergency repair services, not included in other bid item, shall be based upon actual hours of labor service times the bid unit price per hour provided in the Bid Proposal. The price shall include full compensation for labor and incidentals necessary to complete the item, all in accordance with the Contract Documents. Contractor shall submit a proposal to City showing estimated crew and hours to complete work order. ENGINEER OR ENGINEER REPRESENTATIVE (City Inspector) shall inspect Contractor's work and review and approve actual hours worked, on a daily basis. CONTRACTOR shall keep the CITY informed of all time periods they work on a work order approved under this item, daily, in writing.

MM. Items 133 to 139 – Labor Cost for Emergency Work (Overtime), Not Included in Bid Items DD to JJ: Payment for all labor required to perform emergency repair services, not included in other bid item, shall be based upon actual hours of labor service times the bid unit price per hour provided in the Bid Proposal. The price shall include full compensation for labor and incidentals necessary to complete the item, all in accordance with the Contract Documents. Contractor shall submit a proposal to City showing estimated crew and hours to complete work order. ENGINEER OR ENGINEER REPRESENTATIVE (City Inspector) shall inspect Contractor's work and review and approve actual hours worked, on a daily basis. CONTRACTOR shall keep the CITY informed of all time periods they work on a work order approved under this item, daily, in writing.

1.08 BID PACKAGE NO. 3 – REUSE PIPE REPAIR

NN. Item 140 – Excavate and expose existing 24-inch reclaimed water pipe having an invert depth of approximately 5.5 feet below grade in the vicinity of 12th Avenue and S. North Lake Drive: Payment of the unit price per each shall provide full compensation for all necessary and required labor and equipment to locate and confirm dimensions of previous excavation; provide maintenance of traffic, saw-cut and remove existing asphalt above previous excavation; excavate existing material to expose pipe; comply with the State of Florida Trench Safety Act; support and protect existing utilities as required; perform dewatering, sheeting and shoring, if necessary; remove existing fittings and associated piping to expose existing liner ends; remove and dispose of existing liner end seals; maintain an open excavation up to 20-feet in length while performing work specified under other pay items as applicable; backfill and compact excavation; provide surface restoration and all incidentals to achieve repaired liner end seal complete in place, tested, and ready for use. Installation of liner end seals, couplings, and pipe restraints will be paid for separately.

OO. Item 141 – Excavate and expose existing 24-inch reclaimed water pipe having an invert depth of approximately 7.5 feet below grade in the vicinity of 12th Avenue and Tyler Street: Payment of the unit price per each shall provide full compensation for all necessary and required labor and equipment to locate and confirm dimensions of previous excavation; provide maintenance of traffic, saw-cut and remove existing asphalt above previous excavation; excavate existing material to expose pipe; comply with the State of Florida Trench Safety Act; support and protect existing utilities as required; perform dewatering, sheeting and shoring, if necessary; remove existing fittings and associated piping to expose existing liner ends; remove and dispose of existing liner end seals; maintain an open excavation up to 20-feet in length while performing work specified under other pay items as applicable; backfill and compact excavation; provide surface restoration and all incidentals

to achieve repaired liner end seal complete in place, tested, and ready for use. Installation of liner end seals, couplings, and pipe restraints will be paid for separately.

PP. Item 142 – Excavate and expose existing 24-inch reclaimed water pipe having an invert depth of approximately 8.5 feet below grade in the vicinity of 12th Avenue and Harrison Street: Payment of the unit price per each shall provide full compensation for all necessary and required labor and equipment to locate and confirm dimensions of previous excavation; provide maintenance of traffic, saw-cut and remove existing asphalt above previous excavation; excavate existing material to expose pipe; comply with the State of Florida Trench Safety Act; support and protect existing utilities as required; perform dewatering, sheeting and shoring, if necessary; remove existing fittings and associated piping to expose existing liner ends; remove and dispose of existing liner end seals; maintain an open excavation up to 20-feet in length while performing work specified under other pay items as applicable; backfill and compact excavation; provide surface restoration and all incidentals to achieve repaired liner end seal complete in place, tested, and ready for use. Installation of liner end seals, couplings, and pipe restraints will be paid for separately.

QQ. Item 143 – Excavate and expose existing 24-inch reclaimed water pipe having an invert depth of approximately 7.5 feet below grade in the vicinity of 12th Avenue and N. South Lake Drive: Payment of the unit price per each shall provide full compensation for all necessary and required labor and equipment to locate and confirm dimensions of previous excavation; provide maintenance of traffic, saw-cut and remove existing asphalt above previous excavation; excavate existing material to expose pipe; comply with the State of Florida Trench Safety Act; support and protect existing utilities as required; perform dewatering, sheeting and shoring, if necessary; remove existing fittings and associated piping to expose existing liner ends; remove and dispose of existing liner end seals; maintain an open excavation up to 20-feet in length while performing work specified under other pay items as applicable; backfill and compact excavation; provide surface restoration and all incidentals to achieve repaired liner end seal complete in place, tested, and ready for use. Installation of liner end seals, couplings, and pipe restraints will be paid for separately.

RR. Item 144 – Install 24-inch liner end seal: This work will be measured and paid at the unit price per each seal. Each unit price bid shall include, but not be limited to, all necessary or required labor and expense to procure and install seals at existing liner ends. Preparation of surfaces to be sealed shall be performed per the seal manufacturer's recommendations. Seals must form a water-tight, 360-degree internal seal between the liner end and the adjacent unlined pipe. An acceptable seal is the extra-wide Weko-seal with 316 stainless steel retaining bands, or approved equal.

SS. Item 145 – Install 24-inch pressure coupling: This work will be measured and paid at the unit price per each coupling. Each unit price bid shall include, but not be limited to, all necessary or required labor and expense to procure and install couplings to join lined pipe to adjacent unlined pipe. Preparation of pipe surfaces to be joined shall be performed per the coupling manufacturer's recommendations. Couplings must form a water-tight, 360-degree, pressure-resisting external seal. An acceptable seal is the Hymax Versa high-pressure coupling, or approved equal.

TT. Item 146 – Install 24-inch restraint harness: This work will be measured and paid at the unit price per each restraint harness. Each unit price bid shall include, but not be limited to, all necessary or required labor and expense to procure and install restraint harnesses, to bridge a newly installed pressure coupling and connect lined pipe to adjacent unlined pipe. Preparation of pipe surfaces to be restrained shall be performed per the manufacturer's recommendations. An acceptable restraint harness is the Megalug Series 1100CH, or approved equal.

1.09 ALLOWANCES

UU. Item 147 – Cost Allowance for Permits, Licenses and Fees: The allowance indicated for this item is to pay for all permits, licenses and other fees required of the CONTRACTOR from the various agencies having jurisdiction for construction of the project. The allowance shown on the Bid Proposal is an estimate of fees required. Payment will be based on the actual permit, license or fee paid directly to agency, documented by paid receipts, specifically excluding any labor, mark-up, overhead and profit, administration and other costs involved in obtaining permits or licenses or paying fees. Fees specifically excluded from this allowance include but are not limited to re-inspection fees and expired permit fees. The CITY reserves the right to award any, all, or none of the money associated with this allowance.

VV. Item 148 – Testing Allowance: This allowance shall be used to pay for the first round of field and laboratory tests performed on finished compacted backfill, subgrade and limerock base as required by the Specifications as well as bacteriological testing required for potable water installations. The tests shall be performed by an independent testing laboratory selected by the CITY. Should any test(s) fail, subsequent tests shall be performed by the same testing laboratory and paid for by the CONTRACTOR at no additional cost to the Contract.

WW. Item 149 – Material / Equipment Supply / Subcontractor Allowance: Included in this allowance is payment for all material, subcontractor work and equipment required for furnishing and installing on-call routine and emergency repair work authorized by the CITY as part of work under this Contract and not included in other bid items. All material, subcontractor work and equipment for payment under this allowance will be authorized in writing by the CITY. Contractor will be required to submit with their cost proposal a minimum of three (3) vendor quotations for material, subcontractor work and equipment required to complete the work order and to be paid under this allowance. City will approve the final quotation for work to be performed. Payment shall be based on fully documented invoices, submitted in accordance with the Contract, for material and equipment supplied. Amount to be paid shall be based on final invoices submitted.

XX. Item 150 – Owner Allowance: Included in this allowance is work associated with undefined conditions or conflicts developing from undefined conditions incidental to the work done under this contract. All work authorized for payment will be authorized in writing by the CITY. Amount to be paid per undefined conditions or conflict shall be negotiated or agreed to by both parties. The CITY reserves the right to award any, all, or none of the money associated with this allowance.

YY. Item 151 – Consideration for Indemnification in Accordance with the Supplementary General Conditions: In recognition of the CONTRACTOR'S indemnification obligations, the CITY will pay to the CONTRACTOR the specific consideration of ten dollars ($10.00). Payment of said specific consideration shall be made at the time of the payment of the first progress estimate and the CONTRACTOR shall acknowledge payment of this consideration by letter to the CITY after receipt of the progress payment.

PART 2 -- PRODUCTS (Not Used)

PART 3 -- EXECUTION (Not Used)

- END OF SECTION –

SECTION 01070

APPLICABLE STANDARDS

Part 1 - GENERAL

1.01 THE REQUIREMENT

A. Wherever references are made in these specifications to any published standards, codes, standard specifications, or other published data of the various national, regional, or local organizations, such organizations may be referred to by their acronym or abbreviation only. References shall be to the latest versions currently in effect, unless otherwise specified by the City and/or Engineer. As a guide to the user of these specifications, the following acronyms or abbreviations which may appear in these specifications shall have the meanings indicated herein.

B. The following is a partial list of typical abbreviations which may be used in the Specifications, and the organizations to which they refer. Abbreviated titles for other governing standards are used throughout these specifications and, although most of them are widely known, their complete titles are given below to avoid misunderstanding:

1. AAMA - Architectural Aluminum Manufacturer's Association
2. AASHTO - American Association of the State Highway and
3. ACI - American Concrete Institute
4. ACI - American Concrete Institute
5. ACIFS - American Cast Iron Flange Standards
6. ACOE - Army Corps of Engineers
7. ACPA - American Concrete Pipe Association
8. AFBMA - Anti-Friction Bearing Manufacturer's Association
9. AGMA - American Gear Manufacturer's Association
10. AGA - American Gas Association
11. AGMA - American Gear Manufacturers Association
12. AHGDA - American Hot Dip Galvanizers Association
13. AI - The Asphalt Institute
14. AIA - American Institute of Architects
15. AISC - American Institute of Steel Construction
16. AISI - American Iron and Steel Institute

17. AITC - American Institute of Timber Construction
18. AMCA - Air Moving and Conditioning Association
19. ANSI - American National Standards Institute, Inc.
20. APA - American Plywood Association
21. API - American Petroleum Institute
22. APHA - American Public Health Association
23. APWA - American Public Works Association
24. ASA - Acoustical Society of America
25. ASAE - American Society of Agriculture Engineers
26. ASCE - American Society of Civil Engineers
27. ASHRAE - American Society of Heating, Refrigerating, and Air-Conditioning Engineers
28. ASLE - American Society of Lubricating Engineers
29. ASME - American Society of Mechanical Engineers
30. ASMM - Architectural Sheet Metal Manual
31. ASSE - American Society of Sanitary Engineers
32. ASTM - American Society for Testing and Materials
33. AWI - Architectural Woodwork Institute
34. AWPA - American Wood Preservers Association
35. AWPI - American Wood Preservers Institute
36. AWS - American Welding Society
37. AWWA - American Water Works Association
38. BCEPGMD - Broward County Environmental Protection and Growth Management Department (formerly BCEPD)
39. BCHD - Broward County Health Department
40. BHMA - Builders Hardware Manufacturer's Association
41. CMA - Concrete Masonry Association
42. CRSI - Concrete Reinforcing Steel Institute
43. CSA - Canadian Standards Association

44. DHI - Door and Hardware Institute
45. DIPRA - Ductile Iron Pipe Research Association
46. EIA - Electronic Industries Association
47. ETL - Electrical Test Laboratories
48. FBC - Florida Building Code
49. FDEP - Florida Department of Environmental Protection
50. FDOT - Florida Department of Transportation
51. FS - Federal Specifications
52. ICEA - Insulated Cable Engineers Association
53. IEEE - Institute of Electrical and Electronics Engineers
54. IES - Illuminating Engineering Society
55. IPCEA - Insulated Power Cable Engineers Association
56. ISA - Instrument Systems and Automation
57. ISO - International Organization for Standardization
58. MBMA - Metal Building Manufacturers Association
59. MMA - Monorail Manufacturers Association
60. MTI - Marine Testing Institute
61. NAAMM - National Association of Architectural Metal Manufacturers
62. NACE - National Association of Corrosion Engineers
63. NBS - National Bureau of Standards
64. NCPI - National Clay Pipe Institute
65. NEC - National Electrical Code
66. NEMA - National Electrical Manufacturer's Association
67. NFPA - National Fire Protection Association
68. NLMA - National Lumber Manufacturers Association
69. NIOSH - National Institute of Occupational Safety and Health
70. NIST - National Institute of Standards and Testing
71. NRCA - National Roofing Contractors Association
72. NSF - National Science Foundation

73. OSHA - Occupational Safety and Health Administration
74. PCA - Portland Cement Association
75. SMACCNA - Sheet Metal and Air Conditioning Contractors National Association
76. SAE - Society of Automotive Engineers Standards
77. SHBI - Steel Heating Boiler Institute
78. SMACCNA - Sheet Metal and Air Conditioning Contractors National Association
79. SSPC - Steel Structures Painting Council
80. SSPWC - Standard Specifications for Public Works Construction
81. SFWMD - South Florida Water Management District
82. UL - Underwriters Laboratories, Inc.

C. CONTRACTOR shall, when required, furnish evidence satisfactory to the ENGINEER that materials and methods are in accordance with such standards where so specified.

D. In the event any questions arise as to the application of these standards or codes, copies shall be supplied on site by the CONTRACTOR.

Part 2 - PRODUCTS (Not Used)

Part 3 - EXECUTION (Not Used)

- END OF SECTION –

SECTION 01300

SUBMITTALS

Part 1 - GENERAL

1.01 THE REQUIREMENT

A. This section specifies the means of all submittals. All submittals, whether their final destination is to the City, Engineer, or other representatives of the City, shall be directed through the Engineer. A summary of the key types of submittals and the number of copies required is as follows:

Copies to Engineer	Type of Submittal
4	Construction schedule
4	Schedule of payment items
1	Audio visual preconstruction record
6	Progress estimates
4	Shop drawings
4	Certificates of compliance
2	Warranties
1*	Product samples
1	Record drawings
5	Final Record Drawings

*Unless otherwise required in the specific Section where requested.

1.02 SUBMITTAL PROCEDURES

A. Transmit each submittal with a form acceptable to the Engineer, clearly identifying the project Contractor, the enclosed material and other pertinent information specified in other parts of this section. Identify variations from Contract Documents and Product or system limitations which may be detrimental to successful performance of the completed Work.
B. Revise and resubmit submittals as required, identify all changes made since previous submittals. Resubmittals shall be noted as such.
C. Distribute copies of reviewed submittals to concerned parties. Instruct parties to promptly report any inability to comply with provisions.

1.03 CONSTRUCTION PROGRESS SCHEDULE

A. The Contractor shall have the capability of preparing and utilizing the specified construction progress scheduling techniques. A statement of capability shall be submitted in writing to the Engineer with the return of the executed Agreement to the City and will verify that either the Contractor's organization has in-house capability qualified to use the technique or that the Contractor employs a consultant who is so qualified. Capability shall be verified by description of the construction projects to which the Contractor or its consultant has successfully applied the scheduling technique and which were controlled throughout the duration of the project by means of systematic use and updating of the construction progress schedule, the network analysis and associated reports. The submittal shall include the name of the individual on the Contractor's staff who will be responsible for the construction progress schedule, and associated reports and for providing the required updating information of same. The Contractor shall submit its proposed progress (baseline) schedule to the Engineer for review and comment within thirty days of the Notice to Award. The Engineer shall have the authority to determine acceptability/correctness of the schedule logic and activity interrelationships. The use of extraneous, nonworking activities and activities which add restraints to the construction schedule shall not be accepted. Baseline schedules that do not meet their contract completion dates shall not be accepted.

B. The Contractor’s progress schedule (baseline and monthly updates) shall be computer generated and resource loaded. Each construction progress schedule, and associated report shall include the following tabulations: a list of activities in numerical order, a list of activity precedence, schedules sequenced by Early Start Date, Total Float, and Late Start Date. Each schedule and report shall include the following minimum items.

1. Activity Numbers
2. Estimated Duration
3. Activity Description
4. Early Start Date (Calendar Dated)
5. Early Finish Date (Calendar Dated)
6. Latest Allowable Start Date (Calendar Dated)
7. Latest Allowable Finish Date (Calendar Dated)
8. Status (whether critical)
9. Estimated Cost of The Activity
10. Total Float and Free Float

C. In addition, each construction progress schedule, network analysis and report shall be prefaced with the following summary data:

   1. Contract Name and Number
   2. Contractor'S Name
   3. Contract Duration and Float
   4. Contract Schedule
   5. The Effective or Starting Date of The Schedule (the date indicated in the Notice-to-Proceed)

D. The work day to calendar date correlation shall be based on an 8-hour day and 40-hour week with adequate allowance for holidays and all other special requirements of the Work. A total of six (6) days for adverse weather shall also be allowed for in the progress schedule.

E. If the Contractor desires to make changes in its method of operating which affect the construction progress schedule and related items, the Contractor shall notify the Engineer in writing stating what changes are proposed and the reason for the change. If the Engineer accepts these changes, in writing, the Contractor shall revise and submit, without additional cost to the City, all of the affected portions of the construction progress schedule, and associated reports. The construction progress schedule and related items shall be adjusted by the Contractor only after prior acceptance, in writing by the Engineer. Adjustments may consist of changing portions of the activity sequence, activity durations, division of activities, or other adjustments as may be required. The addition of extraneous, nonworking activities and activities which add restraints to the construction progress schedule shall not be accepted.

F. Except where earlier completions are specified, schedule dates which show completion of all Work prior to the contract completion date shall, in no event, be the basis for claim for delay against the City by the Contractor.

G. Construction progress schedules and related items which contain activities showing negative float or which extend beyond the contract completion date will not be accepted by the Engineer.

H. Whenever it becomes apparent from the current construction progress schedule and associated reports that delays to the critical path have resulted and the contract completion date will not be met, or when so directed by the Engineer, the Contractor shall take some or all of the following actions at no additional cost to the City. They shall submit to the Engineer for approval, a written statement of the steps they intend to take to remove or arrest the delay to the critical path in the current construction progress schedule, including a computer generated schedule revision to reflect proposed actions.

1. Increase construction manpower in such quantities and crafts as will substantially eliminate the backlog of work.
2. Increase the number of working hours per shift, shifts per day, working days per week, the amount of construction equipment, or any combination of the foregoing, sufficiently to substantially eliminate the backlog of work.
3. Reschedule activities to achieve maximum practical concurrency of accomplishment of activities, and comply with the revised schedule.

I. If when so requested by the Engineer, the Contractor should fail to submit a written statement of the steps they intend to take or should fail to take such steps as reviewed and accepted in writing by the Engineer, the Engineer may direct the Contractor to increase the level of effort in manpower (trades), equipment and work schedule (overtime, weekend and holiday work, etc.) to be employed by the Contractor in order to remove or arrest the delay to the critical path in the current construction progress schedule, and the Contractor shall promptly provide such level of effort at no additional cost to the City.

J. If the completion of any activity, whether or not critical, falls more than 100 percent behind its previously scheduled and accepted duration, the Contractor shall submit for approval a schedule adjustment showing each such activity divided into two activities reflecting completed versus uncompleted work.

K. Shop drawings which are not approved on the first submittal or within the time scheduled, and equipment which does not pass the specified tests and certifications shall be immediately rescheduled.

L. The contract time will be adjusted only in accordance with the General Requirements and other portions of the Contract Documents as may be applicable. If the Engineer finds that the Contractor is entitled to any extension of the contract completion date, the Engineer's determination as to the total number of days extension shall be based upon the current construction progress schedule and on all data relevant to the extension. Such data shall be included in the next updating of the schedule and related items. Actual delays in activities which, according to the construction progress schedule, do not affect any contract completion date will not be the basis for a change therein.

M. From time to time it may be necessary for the contract schedule of completion time to be adjusted by the City in accordance with the General Requirements and other portions of the Contract Documents as may be applicable. Under such conditions, the Engineer will direct the Contractor to reschedule the Work or contract completion time to reflect the changed conditions, and the Contractor shall revise the construction progress schedule and related items accordingly, at no additional cost to the City.

N. Available float time may be used by the City through the City’s Engineer.

O. The City controls the float time and, therefore, without obligation to extend either the overall completion date or any intermediate completion dates, the City may initiate changes that absorb float time only. City initiated changes that affect the critical path on the network diagram shall be the sole grounds for extending the completion dates. Contractor initiated changes that encroach on the float time may be accomplished only with the City's concurrence. Such changes, however, shall give way to City initiated changes competing for the same float time.

P. To the extent that the construction project schedule, or associated report or any revision thereof shows anything not jointly agreed upon or fails to shown anything jointly agreed upon, it shall not be deemed to have been accepted by the Engineer. Failure to include on a schedule any element of Work required for the performance of this Contract shall not excuse the Contractor from completing all Work required within any applicable completion date, notwithstanding the review of the schedule by the Engineer.

Q. Review and acceptance of the construction progress schedule, and related reports, by the Engineer is advisory only and shall not relieve the Contractor of the responsibility for accomplishing the Work within the contract completion date. Omissions and errors in the construction progress schedule, and related reports shall not excuse performance less than that required by the Contract and in no way make the Engineer an insurer of the Contractor's success or liable for time or cost overruns flowing from any shortcomings in the construction progress schedule, and related reports.

R. The Contractor shall present and discuss the proposed schedule at the preconstruction conference.

S. The construction progress schedule shall be based upon the precedence diagramming method of scheduling and shall be prepared in the form of a horizontal bar chart showing in detail the proposed sequence of the Work and identifying all construction activities included but not limited to yard piping, all structures and treatment units and all related Work specified herein to be performed under the Contract. The schedule shall be time scaled, identifying the first day of each week, with the estimated date of starting and completion of each stage of the Work in order to complete the project within the contract time. The project critical path shall be clearly identified in color or by other means acceptable to the Engineer.

T. The progress schedule shall be plotted on 22-inch by 34-inch and 11-inch by 17-inch paper and shall be revised and updated monthly, depicting progress through the last day of the current month and scheduled progress through completion. Ten (one 22-inch by 34-inch and nine 11-inch by 17-inch), schedules, required schedule "sorts" (tabulations) and an electronic copy of

the baseline schedule shall be submitted for review and acceptance. Five (one 22-inch by 34-inch and four 11-inch x 17-inch) up-to-date copies of the schedule and five copies of tabulations and an electronic copy shall be submitted along with the application for monthly progress payments for the same period.

U. The construction progress schedule shall be developed and maintained using Primavera Sure Trak as manufactured by Primavera Systems, Inc., or equal.

1.04 SCHEDULE OF PAYMENT VALUES

A. The Contractor shall submit a Schedule of Payment Values, in accordance with Section 01025, for all items in the proposal that are to be paid for on a lump sum basis. The schedule shall contain the labor and material values of the component parts of Work for the purpose of making progress payments during the construction period. The Schedule of Payment Values shall directly correlate on an item by item basis (unless otherwise accepted by the Engineer) to each individual activity detailed in the construction progress schedule.

B. The schedule shall be given in sufficient detail for the proper identification of Work accomplished. Each item shall include its proportional share of all costs including the Contractor's overhead, contingencies and profit. The sum of all scheduled items shall equal the total value of the Contract.

C. If the Contractor anticipates the need for payment for materials stored on the project site, it shall also submit a separate list covering the cost of materials, delivered and unloaded with taxes paid. This list shall also include the installed value of the item with coded reference to the Work items in the Schedule of Payment Items.

D. The Contractor shall expand or modify the above schedule and materials listing as required by the Engineer'S initial or subsequent reviews.

E. The Contractor shall update the Schedule of Payment Values monthly for reviewing by the Engineer. The payment applications shall be reviewed by the Engineer in accordance with the updated Schedule of Payment Values.

1.05 SHOP DRAWINGS, PROJECT DATA AND SAMPLES

A. General: A Shop Drawing Submittal Schedule shall be provided by the Contractor within thirty (30) days of the Notice to Proceed.

B. The Contractor shall furnish for review four (4) copies of shop drawings, project data, samples and other submittal items required by the Contract Documents. Two (2) copies shall be returned to the Contractor stamped "Furnish as Submitted" or "Furnish as Corrected". Where major corrections are indicated, two (2) copies will be returned stamped "Revise and Resubmit" and a new submittal is required (4 copies).

C. The review of the Contractor'S submissions shall in no way relieve the Contractor of any of his responsibilities under the Contract. An acceptance of a submission shall be interpreted to mean that there are no specific objections to the submitted material, subject to conformance with the Contract Drawings and Specifications.

D. All submissions shall be dated and properly referenced to the specifications section and Contract Drawing number. The submittal number shall match the following submittal numbering system (or an equivalent system as approved by the Engineer):

Submittal Numbering System

1. Package ID: The package number will reflect the CSI (specification) section number as it appears in the specifications.
2. Subgroup ID: The submittal number will include the CSI number followed by two additional codes. The first will define the type of submittal as follows:

   01 - Product Data, Specifications, Cut Sheets, Manufacturers certification or approval letters.
   02 - Shop Drawings
   03 - Product Samples and Mock-Ups
   04 - Special requirements as required in the contract documents
   05 - As-Built Drawings
   06 - Warranties
   07 - O&M
   08 - Spare Parts

   The second code will identify individual submittals within that submittal type. The number to the left of the decimal represents the submittal

number and the number to the right of the decimal represents the revision number.

Example:

Package	**Submittal**	**Description**
03300	03300-01-1.1	Concrete Admixture A, First Submittal
06400	06400-01-1.2	Re-submittal

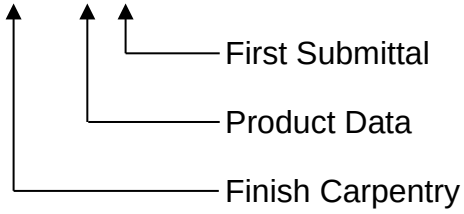

By the following this code system, all submittals may be entered into the Document Tracking System prior to receipt of submittals. When a particular submittal is received, locate the entry in the Document Tracking project file, add the appropriate information and process. The Document Tracking System will provide the next sequence number.

E. Shop Drawings and Project Data within practical limits shall be submitted as a single complete package for any operating system and shall include all items of equipment and mechanical units involved in the functioning of such system. Where applicable, the submission shall include elementary wiring diagrams showing circuit functioning and necessary interconnection wiring diagrams for construction.
F. All submissions shall bear the Contractor’S stamp certifying that they have been checked for conformance and accuracy. Submissions without the Contractor'S stamp of approval will not be reviewed by the Engineer and will be returned to the Contractor.
G. For any submission containing any departure from the Contract Documents and the Contractor shall include proper explanation in his letter of submittal.
H. Work on fabricated or special items shall not be commenced until the required submission information has been reviewed and accepted.
I. Standard items shall not be assembled or shipped until the required submission information has been reviewed and accepted.
J. Prior review actions shall not relieve the Contractor of the responsibility for correcting errors, deviations, and/or omissions discovered at a later date.

K. Shop Drawings: Shop Drawings include, but are not limited to, layout drawings, installation drawings, construction drawings, certified and interconnecting wiring diagrams, etc. The Contractor shall be responsible for security of all the information, details, dimension, drawings, etc. necessary to prepare submission drawings required and necessary under this Contract and to fulfill all other requirements of his Contract. The Contractor shall secure such information, details, drawings, etc. from all possible sources including the Contract Drawings, drawings prepared by subcontractors, Engineer, manufacturers, Contractors, etc.

L. Submission drawings shall accurately and clearly present the following:

1. All working and installation dimensions.
2. Arrangement and sectional views.
3. Units of equipment in the proposed position for installation, details of required attachments and connections and dimensioned locations between units and in relation to the structures.
4. Necessary details and information for making connections between the various trades including but not limited to, power supplies and interconnection wiring between units, accessories, appurtenances, etc.

M. Product Data: Where manufacturer's publications in the form of catalogs, brochures, illustrations, or other data sheets are submitted in lieu of prepared shop drawings, such submission shall specifically indicate the particular item offered. Identification of such items and relative pertinent information shall be made with indelible ink. Submissions showing only general information will not be accepted.

N. Product data shall include materials of construction, dimensions, performance characteristics, capacities, wiring diagrams, piping and controls, etc.

O. Samples: Contractor shall furnish for review all samples as required by the Contract Documents or requested by the Engineer.

P. Samples shall be of sufficient size or quantity to clearly illustrate the quality, type, range of color, finish or texture and shall be properly labeled to show the nature of the work where the material represented by the sample will be used.

Q. Samples shall be checked by the Contractor for conformance to the Contract Documents before being submitted to the Engineer and shall bear the Contractor'S stamp certifying that they have been so checked. Transportation charges on samples submitted to the Engineer shall be prepaid by the Contractor.

R. Engineer's review will be for compliance with the Contract Documents, and his comments will be transmitted to the Contractor with reasonable promptness.

S. Accepted samples will establish the standards by which the completed work will be judged.

1.06 OPERATION AND MAINTENANCE INSTRUCTIONS (MANUALS)

A. Individual Instructions: The Contractor, through manufacturer's representatives or other qualified individuals, shall provide instruction of designated employees of the OWNER in the operation and care of all equipment furnished.

B. Written Instructions: The Contractor shall furnish and deliver to the Engineer, prior to the fifty percent completion point of construction, and no later than thirty (30) days prior to operator training, ten (10) complete sets of instructions, technical bulletins, and any other printed matter such as diagrams, prints or drawings, containing full information required for the proper operation, maintenance, and repair of the equipment. As a minimum, the following shall be included in this submittal:

1. Operating Instructions
2. Troubleshooting Information
3. Maintenance Schedule(s)
4. Lubrication Schedule
5. Location of Service Centers
6. Parts Diagram and List
7. Spare Parts List (spare parts furnished shall be defined)
8. Special Tools List
9. Installation Instructions
10. Assembly & Erection Drawings
11. Dimensional Drawings
12. Wiring Diagram(s)
13. Storage Instructions

C. These requirements are a prerequisite to the operation and acceptance of equipment. Each set of instructions shall be bound together in appropriate three-ring binders. A detailed Table of Contents shall be provided for each set. Written operation and maintenance instructions shall be required for all equipment items supplied for this project. The amount of detail shall be commensurate with the complexity of the equipment item. Submittal shall be made for all mechanical and electrical equipment included but not limited to pumps, valves, gates, etc.

D. Information not applicable to the specific piece of equipment installed on this project shall be struck from the submission. Information provided shall include

a source of replacement parts and names of service representatives, including address and telephone number.

E. Extensive pictorial cuts of equipment are required for operator reference in servicing.

F. When written instructions include shop drawings and other information previously reviewed by the Engineer, only those editions thereof which were accepted by the Engineer, and which accurately depict the equipment installed, shall be incorporated in the instructions.

1.07 RECORD DRAWINGS

A. The Contractor shall keep and maintain, at the job site, one record set of Drawings. On these, it shall mark all project conditions, locations, configurations, and any other changes or deviations which may vary from the details represented on the original Contract Drawings, including buried or concealed construction and utility features which are revealed during the course of construction. Special attention shall be given to recording the horizontal and vertical location of all buried utilities that differ from the locations indicated, or which were not indicated on the Drawings. As-Built furnished grade information shall be included on the record drawings. Said record drawings shall be supplemented by detailed sketches as necessary or directed to indicate, fully, the Work as actually constructed. These master record drawings of the Contractor'S representation of as-build conditions, including all revisions made necessary by addenda and change orders shall be maintained up-to-date during the progress of Work.

B. The record drawings shall be received on the 20th working day of every third month after the month in which the final notice to proceed is given as well as on completion of Work. Failure to maintain the record drawings up-to-date shall be grounds of withholding monthly progress payments until such time as the record drawings are brought up-to-date.

C. In the case of those drawings which depict the detail requirement for equipment to the assembled and wired in the factory, such as motor control centers and the like, the record drawing shall be updated by indicating those portions which are superseded by change order drawings or final shop drawings, and by including appropriate reference information describing the change orders by number and the shop drawings by manufacturer, drawing, and revision numbers.

D. Record drawings shall be accessible to the Engineer at all times during the construction period.

E. Upon substantial completion of the Work and prior to final acceptance, the Contractor shall finalize and deliver a complete set of final record drawings to

the Engineer for transmittal to the City, conforming to the construction records of the Contractor. This set of drawings shall consist of corrected drawings showing the reported location of the Work. The information submitted by the Contractor and incorporated in the Final Record Drawings will be assumed to be correct, and the Engineer will not be responsible for the accuracy of such information, and for any errors or omissions which may appear on the Final Record Drawings as a result.

F. The information submitted by the Contractor in the Final Record Drawings shall be certified by a land surveyor registered in the State of Florida. For clarity, Final Record Drawings needs to be redrawn and clearly labeled as “Record Drawings”. Notations indicated in the drawings shall be legible and printed in black ink. No handwritten notes are allowed.

G. Final payment will not be acted upon until the Engineer certifies the record drawings as required by the agencies having jurisdiction. Said up-to-date record drawings shall be in the form of a set of prints with carefully plotted information.

H. All final record drawings shall be certified by the Engineer of Record. Such certification shall evidence that Engineer has reviewed the information, finds it in substantial accordance with the design; and where deviations from the design exist, that said deviations are not to the detriment of the system. Engineer’s certification shall read as follows:

“I HEREBY NOTIFY THE OWNER OF THE COMPLETION OF CONSTRUCTION OF ALL THE COMPONENTS OF THE WATER, SEWER AND STORMWATER FACILITIES FOR THE ABOVE REFERENCED PROJECT AND CERTIFY THAT THEY HAVE BEEN CONSTRUCTED IN SUBSTANTIAL CONFORMANCE WITH THE PLANS AND SPECIFICATIONS PERMITTED BY THE AGENCIES HAVING JURISDICTION”

I. The Contractor shall submit all electronic media files of the paving, grading, water, sewer and drainage plans, reports, other supporting information, and the final version of as-built drawings shall be submitted to the Engineer’s office. The information provided shall contain an index file with a brief description of the electronic filing contents, and shall be labeled with project name, company name, and point of contact. Documents and spreadsheets shall be submitted in either MS Word, Word Perfect, Excel, Lotus, or other format approved by the Engineer. Drawings shall be submitted in AutoCAD, MicroStation, or other format approved by the Engineer.

J. Final Record Drawings submitted to the City as part of the project acceptance shall contain at least the following information:

1. Drawings shall be legibly marked to record actual construction.
2. Drawings shall show actual location of all underground and above ground water and wastewater, stormwater piping and related appurtenances. All changes to piping location including horizontal and vertical locations of utilities and appurtenances shall be clearly shown and referenced to permanent surface improvements. Drawings shall also show actual installed pipe material, class, etc. Profile sheets shall be updated to include all field measurements and elevations taken during construction.
3. Drawings shall clearly show all field changes of dimension and detail including changes made by field order or by change order.
4. Drawings shall clearly show all details not on original contract drawings but constructed in the field. All equipment and piping relocation shall be clearly shown.
5. Location of all manholes, hydrants, tees, reducers, crosses, valves, and valve boxes shall be shown. All tees, reducers, crosses, and valves shall be referenced from at least two (2) and preferably three (3) permanent points such as building corners and roadway intersections.
6. Dimensions between all manholes shall be field verified and shown. The rim, inverts and grade elevations of all manholes shall be shown.

1.08 WARRANTIES

A. Original warranties, called for in the Contract Documents, shall be submitted to the City through the Engineer. When warranties are required, they shall be submitted prior to request for payment.
B. When advance copies of warranties are requested, they shall be submitted with, and considered as shop drawings.
C. The Contractor shall warrant to the City that all material and labor used in the construction are covered by his warrantee for a minimum of a one year period upon approval and acceptance by the City. The Contractor shall replace or repair defects at no cost to the City during the warrantee period. No visible or potential leakage shall be allowed during the warrantee period.

1.09 CERTIFICATES

A. Copies of certificates of compliance and test reports shall be submitted for requested items to the Engineer prior to request for payment.

1.11 AUDIO-VISUAL PRECONSTRUCTION RECORD

A. General: Prior to commencing work, the Contractor shall have a continuous color audio-video DVD recording taken of the entire Project, including existing areas that will be disturbed by the Contractor's operations, to serve as a record of preconstruction conditions. No construction shall begin prior to review and acceptance of the tapes covering the respective, affected construction area by the Engineer. The Engineer shall have the authority to reject all or any portion of the video DVD not conforming to the specifications and order that it be redone at no additional charge. The Contractor shall reschedule unacceptable coverage within five days after being notified. The Engineer shall designate those areas, if any, to be omitted from or added to the audio-video coverage. Audio-video recordings shall not be performed more than ninety days prior to construction in any area. All DVDs and written records shall become property of the City.

B. Services: The Contractor shall engage the services of a professional electrographer. The color audio-video tapes shall be prepared by a responsible commercial firm known to be skilled and regularly engaged in the business of preconstruction color audio-video tape documentation. The electrographer shall furnish to the Engineer a list of all equipment to be used for the audio-video taping, i.e., manufacturer's name, model number, specifications and other pertinent information. Additional information to be furnished by the electrographer is the names and addresses of two references that the electrographer has performed color audio-video taping for on projects of a similar nature within the last twelve months.

C. Audio-Video DVDs: Audio-video DVDs shall be new. The DVDs shall be compatible for with a standard player-receiver.

D. Equipment: All equipment, accessories, materials and labor to perform this service shall be furnished by the Contractor.

1. The total audio-video system shall reproduce bright, sharp, clear pictures with accurate colors and shall be free from distortion, tearing, rolls or any other form of imperfection. The audio portion of the recording shall reproduce the commentary of the camera operator with proper volume and clarity, and be free from distortion and interruptions.
2. When conventional wheeled vehicles are used, the distance from the camera lens to the ground shall not be less than twelve feet. In some instances, audio-video tape coverage may be required in areas not accessible by conventional wheeled vehicles. Such coverage shall be obtained by walking or special conveyance acceptable to the Engineer.

3. The color video camera used in the recording system shall have a horizontal resolution of 300 lines at center, a luminance signal to noise ratio of 45 dB and a minimum illumination requirement of twenty-five foot-candles.

E. Recorded Information - Audio: Each tape shall begin with the current date, project name and municipality and be followed by the general location; i.e., process structure, or area, viewing side and direction of progress. The audio track shall consist of an original live recording. The recording shall contain the narrative commentary of the electrographer, recorded simultaneously with his fixed elevation video record of the zone of influence of construction.

F. Recorded Information - Video: All video recordings must, by electronic means, display continuously and simultaneously, generated with the actual taping, transparent digital information to include the date and time of recording. The date information shall contain the month, day and year. The time information shall contain the hours, minutes, and seconds. Additional information shall be displayed periodically. Such information shall include, but not be limited to, project name, bid package number, process structure or area, and the viewing side. This transparent information shall appear on the extreme upper left hand third of the screen.

G. Conditions for Taping: All taping shall be done during times of good visibility. No taping shall be done during precipitation, mist or fog. The recording shall only be done when sufficient sunlight is present to properly illuminate the subjects of recordings and to produce bright, sharp video recordings of those subjects.

H. Tape Coverage: Tape coverage shall include all surface features located within the zone of influence of construction supported by appropriate audio coverage. Such coverage shall include, but not be limited to, existing road, driveways, sidewalks, curbs, pavement, landscaping, fences, signs and interior and exterior of existing structures affected by the work and the exteriors of structures adjacent to the work, and any other on-site area that will be occupied or impacted by the Contractor or any of his subcontractors or suppliers within the area covered.

Part 2 - PRODUCTS (Not Used)

Part 3 - EXECUTION (Not Used)

- END OF SECTION –

SECTION 01400 - TESTING AND INSPECTION

PART 1 -- GENERAL

A. All testing and inspection will be in accordance with Article 12 of the General Conditions.

B. The work or actions of the testing laboratory shall in no way relieve the CONTRACTOR of his obligations under the Contract. The laboratory testing work will include such inspections and testing required by the Contract Document, existing laws, codes, ordinances, etc. The testing laboratory will have no authority to change the requirements of the Contract Documents, nor perform or approve any of the CONTRACTOR'S work.

C. The CONTRACTOR shall allow the ENGINEER ample time and opportunity for testing materials and equipment to be used in the work. He shall advise the ENGINEER promptly upon placing orders for materials and equipment so that arrangements may be made, if desired, for inspection before shipment from the place of manufacture. The CONTRACTOR shall at all times furnish the ENGINEER and his representatives, facilities including labor, and allow proper time for inspecting and testing materials, equipment, and workmanship. The CONTRACTOR must anticipate that possible delays may be caused him in the execution of his work due to the necessity of materials and equipment being inspected and accepted for use. The CONTRACTOR shall furnish, at his own expense, all samples of materials required by the ENGINEER for testing, and shall make his own arrangement for providing water, electric power, or fuel for the various inspections and tests of structures and equipment. As a minimum, 24-hours advance written notice shall be provided by the CONTRACTOR for rebar, structural and similar inspections by the ENGINEER. The amount of time required for advance written notice by the CONTRACTOR to the ENGINEER for other inspections depends upon other factors and shall be solely at the ENGINEER’s discretion.

D. The CONTRACTOR shall furnish the services of representatives of the manufacturers of certain equipment, as prescribed in other sections of the Specifications. The CONTRACTOR shall also place his orders for such equipment on the basis that, after the equipment has been tested prior to final acceptance of the work, the manufacturer will furnish to the CITY the certified statements that the equipment has been installed properly and is ready to be placed in functional operation. Tests and analyses required of equipment shall be paid for by the CONTRACTOR, unless specified otherwise in the section which covers a particular piece of equipment.

E. The CITY will bear the cost of all additional tests, inspections, or investigations undertaken by the order of the ENGINEER for the purpose of determining conformance with the Contract Documents if such test, inspection, or investigations are not specifically required by the Contract Documents, and if conformance is ascertained thereby. Whenever nonconformance is determined by the ENGINEER as a result of such test, inspections, or investigations, the CONTRACTOR shall bear the full cost thereof or shall reimburse the CITY for said cost. The cost of any additional tests and investigations, which are ordered by the ENGINEER to ascertain subsequent conformance with the Contract Documents, shall be borne by the CONTRACTOR.

PART 2 -- PRODUCTS (Not Used)

PART 3 -- EXECUTION (Not Used)

- END OF SECTION -

SECTION 01410

CONTRACTOR'S HEALTH AND SAFETY PLAN

PART 1 - GENERAL

1.1 DESCRIPTION

A. Scope:
   1. This Section describes CONTRACTOR's responsibilities for a written site-specific health and safety plan (SSHP). CONTRACTOR shall conduct all construction activities in a safe manner so as not to result in:
      a. injuries to employees, Subcontractors or other persons with an interest at or near the Site;
      b. employee exposures to health hazards above the occupational limits established by the Occupational Health and Safety Administration (OSHA), the American Conference of Governmental Industrial Hygienists (ACGIH), or the Nuclear Regulatory Commission (NRC);
      c. exposure of area residents to air contaminants above the levels established for general public exposure by the Environmental Protection Agency (EPA), NRC, or the State in which the Project is located;
      d. significant increases in the levels of contaminants in soil, water, or sediment near the Site; or
      e. violations of OSHA, or other Laws or Regulations.

B. Any disregard of the provisions of the SSHP may, without limitation, be deemed just and sufficient reason for termination of CONTRACTOR's services for cause.

1.2 QUALITY ASSURANCE

A. Qualifications:
   1. Engage an industrial hygienist certified by the American Board of Industrial Hygiene or a safety professional certified by the Board of Certified Safety Professionals to prepare or supervise the preparation of the SSHP.
   2. Submit qualifications along with SSHP.

B. Regulatory Requirements: CONTRACTOR's health and safety practices shall follow the standards and guidelines established in the following:
   1. 29 CFR 1904, OSHA, Record Keeping.
   2. 29 CFR 1910, OSHA, General Industry Standards.
   3. 29 CFR 1926, OSHA, Construction Industry Standards.
   4. 29 CFR 1926.65, OSHA, Hazardous Waste Operations and Emergency Response.
   5. 49 CFR 171.8, DOT, Hazardous Materials in Transport.
   6. 40 CFR Parts 261.3, 264 and 265, EPA, Resource Conservation and Recovery Act.
   7. 29 CFR 1910.146, OSHA, Permit-Required Confined Spaces.
   8. 29 CFR 1926.1101, OSHA, Asbestos

1.3 SUBMITTALS

A. Submit to ENGINEER the following:
   1. CONTRACTOR's SSHP.
   2. Qualifications of industrial hygienist or safety professional.
   3. Health and safety reports.
   4. Accident reports.

PART 2 - GENERAL

2.1 GENERAL PROVISIONS

A. Submit SSHP to ENGINEER one week prior to the Preconstruction Conference, or 30 days prior to planned mobilization at the Site, whichever is sooner.

B. The SSHP shall bear a stamp or specific written indication that CONTRACTOR has satisfied CONTRACTOR's obligations under the Contract Documents with respect to CONTRACTOR's review and approval of the SSHP.

C. ENGINEER will review and either accept or return for revision CONTRACTOR's SSHP in accordance with the Schedule of Submittals acceptable to ENGINEER. ENGINEER's review and acceptance will be only to determine if the topics covered by the SSHP conform to the Contract Documents.

D. ENGINEER's review and acceptance will not extend to means, methods, techniques, procedures of construction, or to whether the representations made in the SSHP comply with regulatory standards or standards of good practice.

E. At the time of submittal, CONTRACTOR shall give ENGINEER specific written notice of variations, if any, that the SSHP may have from the requirements of the Contract Documents. This notice shall be both a written communication separate from the submittal; and, in addition, by a specific notation made on each submittal to ENGINEER for review and acceptance of each such variation.

F. No Work shall be performed on the Site until the written SSHP has been accepted by the ENGINEER.

G. Notwithstanding any other provision of the Contract Documents, extensions to the Contract Times will not be granted if caused by undue delay by CONTRACTOR in developing or revising the SSHP.

2.2 WRITTEN HEALTH AND SAFETY PROGRAM

A.. The SSHP, which shall be kept on the Site, shall address the safety and health hazards of each phase of operations on the Site and include the requirements and procedures for employee protection. The SSHP as a minimum, shall address and include the following:

1. The organizational structure of CONTRACTOR's organization.
2. A comprehensive work plan.
3. A safety and health risk or hazard analysis for each task and operation found in the work plan.
4. Employee training assignments including copies of 40-hour, 24-hour Supervised Field Activities, 8-hour Supervisors, and 8-hour Refresher Training Certificates for all CONTRACTOR's employees assigned to the Project.
5. Personal protective equipment to be used by employees for each of the tasks and operations being conducted. Respirator fit test certificates for all CONTRACTOR employees assigned to the Project.
6. Medical Surveillance Requirements: Medical clearance certificates for all CONTRACTOR's employees assigned to the Project.
7. Frequency and types of air monitoring, personnel monitoring, and environmental sampling techniques and instrumentation to be used, including methods of maintenance and calibration of monitoring and sampling equipment.

8. Site control measures for purposes, including but not limited to:
    a. preventing trespassing;
    b. preventing unqualified or unprotected workers from entering restricted areas;
    c. preventing tracking of contaminants out of the Site;
    d. maintaining log of employees on and visitors to the Site;
    e. delineating hot, cold and support zones;
    f. locating personnel and equipment decontamination zones; and
    g. communicating routes of escape and gathering points.
9. Decontamination procedures.
10. An emergency response plan for safe and effective responses to emergencies, including the necessary PPE and other equipment.
11. Confined space entry procedures (if applicable).
12. A spill containment program.

C. Organizational Structure:
1. The organizational structure part of the SSHP shall refer to or incorporate information on the specific chain of command and specify the overall responsibilities of supervisors and employees, and shall include, at a minimum, the following elements:
    a. designation of a general supervisor who has the responsibility and authority to direct all hazardous waste operations.
    b. a Site safety and health supervisor who has the responsibility and authority to implement and modify the SSHP and verify compliance.
    c. all other personnel needed for hazardous waste Site operations and emergency response and their general functions and responsibilities.
    d. The lines of authority, responsibility, and communication.
2. The organizational structure shall he reviewed and updated as necessary to reflect the current status of Site operations.

D. Work Plan:
1. The comprehensive work plan part of the SSHP shall refer to or incorporate information on the following:
    a. The tasks and objectives of the Site operations and the logistics and resources required to achieve those tasks and objectives.
    b. The anticipated activities as well as the CONTRACTOR's normal operating procedures.
    c. The personnel and equipment requirements for implementing the work plan.

E. The SSHP shall include procedures that will be used to ensure safe waste handling during the excavating, handling, loading, and transporting activities.

2.3 ACCIDENT REPORTING AND INVESTIGATION

A. Document all accidents resulting in bodily injury using OSHA 301 form.

B. Submit copies of completed OSHA 301 forms to the ENGINEER weekly.

C. Based upon the results of an accident investigation, make modifications to the SSHP by changing tasks or procedures to prevent a reoccurrence.

D. Post a copy of CONTRACTOR's OSHA 300A report in a conspicuous place onsite.

2.4 DAILY HEALTH AND SAFETY FIELD REPORTS

A. Submit to ENGINEER daily health and safety field reports including, but not limited to, weather conditions, delays encountered in construction, and acknowledgment of deficiencies noted along with corrective actions taken on current and previous deficiencies. In addition, the daily health and safety air monitoring results, documentation of instrument calibration, new hazards encountered, and PPE utilized shall be included.

B. The daily health and safety field reports shall include a description of problems, real or anticipated, encountered during the course of Work that should be brought to the attention of the ENGINEER and notification of deviations from planned Work shown in the previously submitted daily health and safety field report(s).

PART 3 - EXECUTION (Not Used)

- END OF SECTION -

SECTION 01510

TEMPORARY UTILITY SERVICES AND STAGING AREA

PART 1 -- GENERAL

1.01 GENERAL

A. The CONTRACTOR shall provide for temporary utilities and services for his own operations. These shall include electrical power, water, ventilation, sanitary facilities. The CONTRACTOR shall furnish, install and maintain all temporary utilities during the contract period including removal upon completion of the work. Such facilities shall comply with regulations and requirements of the National Electrical Code, OSHA, Florida Power and Light, and applicable Federal, State and local codes, etc. In addition, the CONTRACTOR shall provide the following:

1.02 TEMPORARY POWER (NOT USED)

1.03 TEMPORARY WATER

A. The CONTRACTOR shall supply all water used for construction, flushing, testing, and temporary sanitary facilities. The CONTRACTOR shall provide and maintain all piping, fittings, adapters, and valving required. It is the CONTRACTOR'S responsibility to arrange through the City Underground Utilities Division for a 2-inch fire hydrant water meter. A deposit to be paid by the CONTRACTOR is required for meter rental and all water shall be purchased at the prevailing rate.

1.04 TEMPORARY VENTILATION (NOT USED)

1.05 TEMPORARY SANITARY FACILITIES

A. The CONTRACTOR shall provide and maintain adequate and clean sanitary facilities for the construction work force and visitors. The facilities shall comply with local codes and regulations and be situated at approved locations.

1.06 TEMPORARY TELEPHONE SERVICE (NOT USED)

1.07 SECURITY (NOT USED)

1.08 STAGING AREA

A. The CONTRACTOR shall arrange, coordinate and take all necessary steps regarding his work effort to comply with constraints defined in Section 01520, including off site parking, staging, storage, etc., as required. Costs associated with these efforts shall be included in the bid for this project.

PART 2 -- PRODUCTS (Not Used)

PART 3 -- EXECUTION (Not Used)

- END OF SECTION -

SECTION 01530

PROTECTION OF EXISTING FACILITIES

PART 1 -- GENERAL

1.01 THE REQUIREMENT

A. The CONTRACTOR shall protect all existing utilities and improvements not designated for removal and shall restore damaged or temporarily relocated utilities and improvements to a condition equal to or better than they were prior to such damage or temporary relocation, all in accordance with requirements of the Contract Documents.

B. The CONTRACTOR shall verify the exact locations and depths of all utilities shown and the CONTRACTOR shall make exploratory excavations of all utilities that may interfere with the Work. All such exploratory excavations shall be performed as soon as practicable after award of Contract and, in any event, a sufficient time in advance of construction to avoid possible delays to the CONTRACTOR'S Work. When such exploratory excavations show the utility location as shown to be in error, the CONTRACTOR shall so notify the CITY.

C. The number of exploratory excavations required shall be that number which is sufficient to determine the alignment and grade of the utility.

1.02 RIGHTS-OF-WAY (NOT USED)

1.03 PROTECTION OF STREET OR ROADWAY MARKERS (NOT USED)

1.04 RESTORATION OF FACILITIES

A. General: All paved areas including asphaltic concrete berms cut or damaged during construction shall be replaced with similar materials and of equal thickness to match the existing adjacent undisturbed areas, except where specific resurfacing requirements have been called for in the Contract Documents or in the requirements of the agency issuing the permit. All temporary and permanent pavement shall conform to the requirements of the affected pavement CITY. All pavements which are subject to partial removal shall be neatly saw cut in straight lines.

B. Temporary Restoration: Temporary restoration includes repair to all driveways, sidewalks and roadways. They shall be swept clean and be maintained free of dirt and dust. All areas disturbed by the construction activities shall be restored to proper grade, cleaned up, including the removal of debris, trash, and deleterious materials. All construction materials, supplies, or equipment, including piles of debris shall be removed from the area. All temporarily restored areas shall be maintained by the CONTRACTOR. These areas shall be kept clean and neat, free of dust and dirt, until final restoration operations are completed. The CONTRACTOR is responsible to utilize dust abatement operations in the temporarily restored areas as required, to the satisfaction of the ENGINEER.

C. Temporary Resurfacing: Wherever required by the public authorities having jurisdiction, the CONTRACTOR shall place temporary surfacing promptly after backfilling and shall maintain such surfacing for the period of time fixed by said authorities before proceeding with the final restoration and improvements.

E. Permanent Resurfacing: In order to obtain a satisfactory junction with adjacent surfaces, the CONTRACTOR shall saw cut back and trim the edge so as to provide a clean, sound, vertical joint before permanent replacement of an excavated or damaged portion of pavement. Damaged edges of pavement along excavations and elsewhere shall be trimmed back by saw cutting in straight lines. All pavement restoration and other facilities restoration shall be constructed to finish grades compatible with adjacent undisturbed pavement, unless otherwise shown on the drawings.

F. Final Restoration: Final restoration shall include the completion of all required pavement replacement of roadways, driveways, curbs, gutters, sidewalks and other existing improvements disturbed by the construction: final grading, placement of sod, installation or replacement of any trees or shrubs, repair of irrigation systems, pavement markings, etc., all complete and finished, acceptable to the ENGINEER.

1.05 EXISTING UTILITIES AND IMPROVEMENTS

A. General: The CONTRACTOR shall protect all underground utilities and other improvements which may be impaired during construction operations. It shall be the CONTRACTOR'S responsibility to ascertain the actual location of all existing utilities and other improvements that will be encountered in its construction operations, and to see that such utilities or other improvements are adequately protected from damage due to such operations.

B. Utilities to be Moved: In case it shall be necessary to move the property of any public utility or franchise holder, such utility company or franchise holder will, upon request of the CONTRACTOR, be notified by the CITY to move such property within a specified reasonable time. When utility lines that are to be removed are encountered within the area of operations, the CONTRACTOR shall notify the CITY a sufficient time in advance for the necessary measures to be taken to prevent interruption of service.

C. Where the proper completion of the Work requires the temporary or permanent removal and / or relocation of an existing utility or other improvement which is shown, the CONTRACTOR shall remove and temporarily replace or relocate such utility or improvement in a manner satisfactory to the CITY and the OWNER of the utility/facility. In all cases of such temporary removal or relocation, restoration to former location shall be accomplished by the CONTRACTOR in a manner that will restore or replace the utility or improvement as nearly as possible to its former locations and to as good or better condition than found prior to removal.

D. CITY'S Right of Access: The right is reserved to the CITY and to the OWNER'S of public utilities and franchises to enter at any time upon any public street, alley, right-of-way, or easement for the purpose of making changes in their property made necessary by the Work of this Contract.

E. Underground Utilities Shown or Indicated: Existing utility lines that are shown or the locations of which are made known to the CONTRACTOR prior to excavation and that are to be retained, and all utility lines that are constructed during excavation operations shall be protected from damage during excavation and backfilling and, if damaged, shall be immediately repaired by the CONTRACTOR.

F. Underground Utilities Not Shown or Indicated: In the event that the CONTRACTOR damages any existing utility lines that are not shown or the locations of which are not made known to the CONTRACTOR prior to excavation by the CITY and Sunshine One-Call Notification, a written report thereof shall be made immediately to the CITY. The CONTRACTOR shall make the repairs immediately under the provisions for changes and extra work contained in the General Conditions.

G. Approval of Repairs: All repairs to a damaged improvement are subject to inspection and approval by an authorized representative of the CITY before being concealed by backfill or other Work.

H. No fill, excavation material, construction generated debris or equipment shall obstruct water valves, gas meters or sewer manholes. Water, sewer and gas service shall be made accessible to repair or maintenance crews representing the CITY or a privately-owned utility company.

I. Maintaining in Service: All oil and gasoline pipelines, power, and telephone or other communication cable ducts, gas and water mains, irrigation lines, reuse lines, sewer lines, storm drain lines, poles, and overhead power and communication wires and cables encountered along the line of the Work shall remain continuously in service during all the operations under the Contract, unless other arrangements satisfactory to the CITY are made with the owner of said utilities. The CONTRACTOR shall be responsible for and shall repair all damage due to its operations, and the provisions of this Section shall not be abated even in the event such damage occurs after backfilling or is not discovered until after completion of the backfilling.

1.06 TREES WITHIN STREET RIGHTS-OF-WAY AND PROJECT LIMITS

If any tree removal or relocation is required, the CONTRACTOR needs to coordinate with the ENGINEER, accordingly. All required permits related to tree removal are the responsibility of the CONTRACTOR.

PART 2 -- PRODUCTS (Not Used)

PART 3 -- EXECUTION (Not Used)

- END OF SECTION -

SECTION 01550

SITE ACCESS AND STORAGE

PART 1 – GENERAL

1.01 SITE ACCESS

A. The CONTRACTOR shall make its own investigation of the condition of available public and private roads and of clearances, restrictions, bridge load limits, and other limitations affecting transportation and ingress and egress to the site of the Work. It shall be the CONTRACTOR's responsibility to construct and maintain any haul roads required for its construction operations.

B. The CONTRACTOR will be responsible for monitoring the main gate for its personnel, equipment and material deliveries.

1.02 STORAGE

A. Limited storage area is available within the work areas shown on the Drawings. Any equipment and materials stored here shall be in accordance with the manufacturer's recommendations and as indicated by the CITY.

B. Responsibility for protection and safekeeping of equipment and materials will be solely that of the CONTRACTOR, and no claim shall be made against the CITY by reason of any act of an employee or trespasser. Should an occasion arise necessitating access to an area occupied by stored equipment and/or materials, the CONTRACTOR shall immediately move them.

C. If the CONTRACTOR requires additional staging and storage area than shown on the Drawings, the CONTRACTOR shall obtain such areas from off site sources at no additional cost to the CITY.

D. Upon completion of the Contract, the CONTRACTOR shall remove from the storage and work areas all of their equipment, temporary fencing, surplus materials, rubbish, etc., and restore the area to its original or better conditions.

PART 2 -- PRODUCTS (Not Used)

PART 3 -- EXECUTION (Not Used)

- END OF SECTION -

SECTION 01560

SPECIAL CONTROLS

PART 1 -- GENERAL

1.01 CHEMICALS

A. All chemicals used during project construction or furnished for testing of project operation, whether herbicide, pesticide, disinfectant, polymer, reactant of other classification, will be required to show approval of either EPA or HUD. The handling, use, storage and disposal of such materials, containers or residues shall be in strict conformance with manufacturer and/or CONTRACTOR'S secured storage. Copies of antidote literature and a supply of antidotes shall be kept at the job site office.

1.02 DUST

A. During all work for this Contract, the CONTRACTOR shall by the application of water and/or calcium chloride or other means, approved by the ENGINEER, eliminate dust annoyance to adjacent property, business establishments and the plant site in accordance with Article 7.21, Dust Control, of the General Conditions. The CONTRACTOR shall take all protective measures, to the satisfaction of the ENGINEER, necessary to ensure that dust and debris does not enter any of the mechanical or electrical equipment. The CONTRACTOR shall be responsible for the cleanup of existing buildings, equipment, controls, etc., which have become soiled due to the lack of proper dust control as determined by the ENGINEER. The CONTRACTOR shall provide daily application of water to all unpaved areas designated by the ENGINEER in the field and to the satisfaction of the ENGINEER in the field**.**

1.03 NOISE

A. Noise resulting from the CONTRACTOR'S work shall not violate the Hollywood Code of Ordinance Chapter 100, with specific note to the restrictions of paragraph 100.05 or exceed the noise levels and other requirements stated in the Broward County Chapter 27 Pollution Control, relating to noise abatement in Broward County. The CONTRACTOR shall be responsible for curtailing noise resulting from his operation. He shall, upon written notification from the ENGINEER or the noise control officers, make any repairs, replacements, adjustments, additions and furnish mufflers when necessary to fulfill requirements.

1.04 EROSION ABATEMENT AND WATER POLLUTION

A. It is imperative that the CONTRACTOR'S dewatering operations not contaminate or disturb the environment or properties adjacent to the Work. The CONTRACTOR, shall, therefore, schedule and control his operations to confine all runoff water from disturbed surfaces, water from dewatering and/or from excavation below the ground water table operations that becomes contaminated with lime silt, muck and other deleterious matter, fuels, oils, bitumens, calcium chloride, chemicals and other polluting materials.

B. The CONTRACTOR shall construct temporary stilling basin(s) of adequate size and provide all necessary temporary materials, operations and controls including, but not limited to, filters, coagulants, screens and other means necessary to attain the required discharge water quality.

C. The CONTRACTOR shall be responsible for providing, operating and maintaining materials and equipment used for conveying the clear water to the point of discharge. All pollution prevention procedures, materials, equipment and related items shall be operated and

maintained until such time as the dewatering operation is discontinued. Upon the removal of the materials, equipment and related items the CONTRACTOR shall restore the area to the condition prior to his commencing work.

1.05 HURRICANE AND STORM WARNINGS

A. As the schedule for this project coincides, in part, with the recognized South Florida hurricane season, the CONTRACTOR's attention is drawn to the possibility of hurricane conditions, or severe storm conditions, occurring at the plant site during the course of Contract work.

B. Within 30-days of the date of Notice-to-Proceed, the CONTRACTOR shall submit to the ENGINEER and Owner a Hurricane Preparedness Plan. The plan should outline the necessary measures which the CONTRACTOR proposes to perform at no additional cost to the Owner in case of a hurricane warning.

C. In the event of inclement weather, or whenever the ENGINEER shall direct, the CONTRACTOR shall, and will cause Sub-Contractors to protect carefully the Work and materials against damage or injury by reasons of failure on the part of the CONTRACTOR to so protect the Work. Such Work and materials so damaged shall be removed and replaced at the expense of the CONTRACTOR.

1. Hurricane Watch: Upon designation of a hurricane watch, CONTRACTORS shall be responsible for storing all loose supplies and equipment on the job site that may pose a danger. In addition, the CONTRACTOR shall remove all bulkheads and plugs in pipelines that would impede drainage in the case of flooding. Structures that may be in danger of floatation shall be flooded. The CONTRACTOR shall also cooperate with CITY personnel in protecting other structures at the site.

2. Hurricane Warning: No mobile "temporary facility" under the control of the City of Hollywood, or on City property, shall be staffed during a hurricane warning. CONTRACTOR facilities meeting these criteria shall comply.

D. The CONTRACTOR is advised to take all necessary precautions to protect his equipment by moving it to higher ground if in an area subject to flooding. Known areas of Hollywood that would be subject to flooding from storm tides include:

Hollywood Blvd.	North Lake Area	South Lake Area
A1A	Sheridan Street	Dania Beach Blvd.
US Highway 1	46th Avenue	Hallandale Beach Blvd.

1.06 PESTS AND RODENTS

A. The CONTRACTOR shall be responsible for maintaining the jobsite free from litter, rubbish and garbage. He shall provide containers for the disposal of garbage and other materials that attract and are breeding places for pests and rodents. The CONTRACTOR shall provide the services of an exterminator to inspect the jobsite on a periodic basis and to provide service as required to control pests and rodents.

1.07 PERIODIC CLEAN-UP; BASIC SITE RESTORATION

A. During construction, the CONTRACTOR shall regularly remove from the site all accumulated debris and surplus materials of any kind which result from his operations, or whenever the accumulation in excess of one truck load. Unused equipment and tools shall be stored at the CONTRACTOR'S yard or base of operations for the project.

B. When the work involves installation of sewers, drains, water mains, manholes, underground structures, or other disturbance of existing features in or across streets, rights-of-way, easements, or private property, the CONTRACTOR shall (as the work progresses) promptly backfill, compact, grade and otherwise restore the disturbed area to a basic condition which will permit resumption of pedestrian or vehicular traffic and any other critical activity or function consistent with the original use of the land. Unsightly mounds of earth, large stones, boulders, and debris shall be removed so that the site presents a neat appearance.

C. The CONTRACTOR shall perform the clean-up work on a regular basis and as frequently as ordered by the ENGINEER. Basic site restoration in a particular area shall be accomplished immediately following the installation or completion of the required facilities in that area. Furthermore, such work shall also be accomplished, when ordered by the ENGINEER, if partially completed facilities must remain incomplete for some time period due to unforeseen circumstances.

D. Upon failure of the CONTRACTOR to perform periodic clean-up and basic restoration of the site to the ENGINEER'S satisfaction, the ENGINEER may, upon five (5) days prior written notice to the CONTRACTOR, employ such labor and equipment as he deems necessary for the purpose, and all costs resulting therefrom shall be charged to the CONTRACTOR and deducted from the amounts of money that may be due him.

1.08 SECURITY

A. The CONTRACTOR shall care for and protect against loss or damage of all material to be incorporated in the construction for the duration of the Contract and shall repair or replace damaged or lost materials and damage to structures.

B. The CONTRACTOR shall be responsible for providing, and maintaining temporary fencing and gates and the daily securing of temporary fencing and gates used for construction purposes for the duration of the project.

C. The CONTRACTOR shall strictly comply with working hours on the project site. Prior to any work outside of the standard working hours, the CONTRACTOR shall request the City's approval via written request (at least 8 hours in advance). The written request shall clearly define the work to be performed, the names of the employees, their employer and their trade and the hours and days during which the work is planed.

The City is considering and the CONTRACTOR shall comply with additional security requirements including employee photo identification at all times on-site and employee parking passes.

PART 2 -- PRODUCTS (Not Used)

PART 3 -- EXECUTION (Not Used)

- END OF SECTION -

SECTION 01570

TRAFFIC REGULATIONS AND MAINTENANCE OF TRAFFIC

PART 1 – GENERAL

1.01 TRAFFIC CONTROL

A. CONTRACTOR shall obey all traffic laws and comply with all the requirements, rules and regulations of the State of Florida Department of Transportation (FDOT), the City of Hollywood, Broward County and other local authorities having jurisdiction, to maintain adequate warning signs, lights, barriers, etc., for the protection of traffic on public roadways and the treatment plant site.

B. The CONTRACTOR shall maintain traffic and protect the public from all damage to persons and property within the Contract Limits, in accordance with the Contract Documents and all applicable state, city and local regulations. The CONTRACTOR shall conduct its construction operations so as to maintain and protect access, for vehicular and pedestrian traffic, to and from all properties and business establishments adjoining or adjacent to those streets affected by his operations, and to subject the public to a minimum of delay and inconvenience. Suitable signs, barricades, railing, etc. shall be erected and the work outlined by adequate lighting at night. Danger lights shall be provided as required. Watchmen, flagmen, and crossing guards shall be provided as may be necessary for the protection of traffic. Traffic Control and Maintenance of traffic during construction shall be included in the CONTRACTOR's bid and no additional payment shall be requested to the City for these activities

C. For the protection of traffic in public or private streets and alleyways, the CONTRACTOR shall provide, place, and maintain all necessary barricades, traffic cones, warning signs, lights, and other safety devices in accordance with the requirements of the "Manual of Uniform Traffic Control Devices (MUTCD), Part VI, Traffic Controls for Street and Highway Construction and Maintenance Operations", published by U.S. Department of Transportation, Federal Highway Administration (ANSI D6.1).

D. The CONTRACTOR shall submit a Maintenance of Traffic (MOT) Plan for ENGINEER and/or CITY approval at least 60 days prior to construction work.

E. Prior to performing any work within or abutting the State rights-of-way, the Contractor shall submit a Maintenance of Traffic (MOT) Plan to FDOT for approval as required by the FDOT Utility Permit.

F. All signs, signals, and barricades shall conform to the requirements of Subpart G, Part 1926, of the OSHA Safety and Health Standards for Construction.

G. All dirt spilled from the CONTRACTOR'S trucks on existing pavements shall be removed by the CONTRACTOR immediately and whenever in the opinion of the CITY the accumulation is sufficient to cause the formation of mud, dust, interference with traffic or create a traffic hazard.

H. Areas designated by the Broward County Traffic Engineering Division as “Safe Walk Routes” shall adhere to the requirements of the Broward County Maintenance of Traffic School/Pedestrian.

1.02 TEMPORARY CROSSINGS

A. General: Wherever necessary or required for the convenience of the public or individual residents at street or highway crossings, private driveways, or elsewhere, the CONTRACTOR shall provide suitable temporary bridges over unfilled excavations, except in such cases as the CONTRACTOR shall secure the written consent of the individuals or authorities concerned to omit such temporary bridges, which written consent shall be delivered to the CITY prior to excavation. All such bridges shall be maintained in service until access is provided across the backfilled excavation. Temporary bridges for street and highway crossing shall conform to the requirements of the authority having jurisdiction in each case, and the CONTRACTOR shall adopt designs furnished by said authority for such bridges, or shall submit designs to said authority for approval, as may be required.

B. Street Use: Nothing herein shall be construed to entitle the CONTRACTOR to the exclusive use of any public street, alleyway, or parking area during the performance of Work hereunder, and it shall so conduct its operations as not to interfere unnecessarily with the authorized work of utility companies or other agencies in such streets, alleyways, or parking areas. No street shall be closed to the public without first obtaining permission of the CITY and proper governmental authority. Where excavation is being performed in primary streets or highways, one lane in each direction shall be kept open to traffic at all times unless otherwise provided or shown. Toe boards shall be provided to retain excavated material if required by the CITY or the agency having jurisdiction over the street or highway. Fire hydrants on or adjacent to the Work shall be kept accessible to fire-fighting equipment at all times. Temporary provisions shall be made by the CONTRACTOR to assure the use of sidewalks and the proper functioning of all gutters, sewer inlets, and other drainage facilities.

C. The CONTRACTOR shall take all necessary precautions for the protection of the Work and the safety of the public. All barricades and obstructions shall be illuminated at night, and all lights shall be kept burning from sunset until sunrise. The CONTRACTOR shall station such guards or flaggers and shall conform to such special safety regulations relating to traffic control as may be required by the public authorities within their respective jurisdictions. All signs, signals, and barricades shall conform to the requirements of Subpart G, Part 1926, of the OSHA Safety and Health Standards for Construction.

D. The CONTRACTOR shall remove traffic control devices when no longer needed, repair all damage caused by installation of the devices, and shall remove post settings and backfill the resulting holes to match grade.

E. Temporary Street Closure: If closure of any street is required during construction, a formal application for a street closure shall be made to the authority having jurisdiction at least 30 days prior to the required street closure in order to determine necessary sign and detour requirements. Detour signs shall be

provided, installed prior to street closure, and removed after construction by the CONTRACTOR.

F. Temporary Driveway Closure: The CONTRACTOR shall notify the CITY or occupant (if not owner-occupied) of closure of driveways to be closed more than one eight-hour work day, at least three working days prior to the closure. The CONTRACTOR shall minimize the inconvenience and minimize the time period that the driveways will be closed. The CONTRACTOR shall fully explain to the owner/occupant how long the work will take and when closure is to start.

G. Temporary Bridges: Whenever necessary, the CONTRACTOR shall provide suitable temporary bridges or steel plates over unfilled excavations, except in such cases as the CONTRACTOR shall secure the written consent of the individuals or authorities concerned to omit such temporary bridges or steel plates, which written consent shall be delivered to the ENGINEER prior to excavation. All such bridges or steel plates shall be maintained in service until access is provided across the backfilled excavation. Temporary bridges or steel plates for street and highway crossing shall conform to the requirements of the authority having jurisdiction in each case, and the CONTRACTOR shall adopt designs furnished by said authority for such bridges or steel plates, or shall submit designs to said authority for approval, as may be required.

1.03 CONTRACTOR PARKING

A. The CONTRACTOR shall obtain off-site parking for all personnel vehicles as required.

PART 2 – PRODUCTS (NOT USED)

PART 3 – EXECUTION (NOT USED)

- END OF SECTION -

SECTION 01700

PROJECT CLOSEOUT

PART 1 -- GENERAL

1.01 PROJECT CLOSEOUT

A. As construction of the project enters the final stages of completion, the CONTRACTOR shall, in accordance with the requirements set forth in the Contract Documents, attend to or have already completed the following items:

1. Scheduling start-up and initial operation.

2. Correcting or replacing defective work, including completion of items previously overlooked or work which remains incomplete, all as evidenced by the CITY's "Punch" lists.

3. Make final submittals.

4. Attend to any other items listed herein or brought to the CONTRACTOR's attention by the CITY.

1.02 CLOSEOUT TIMETABLE

A. The CONTRACTOR shall establish dates for equipment testing, acceptance periods, and on-site instructional periods (as required under the Contract). Such dates shall be established not less than one week prior to beginning any of the foregoing items, to allow the CITY, the ENGINEER, and their authorized representatives sufficient time to schedule attendance at such activities.

1.03 FINAL SUBMITTALS

A. Before the acceptance of the project major milestones for substantial completion, the CONTRACTOR shall submit to the ENGINEER (or to the CITY if indicated) certain records, certifications, etc., which are specified elsewhere in the Contract Documents. Missing, incomplete or unacceptable items, as determined by the ENGINEER or the CITY, shall indicate non-compliance with substantial completion major milestone dates. A partial list of such items appears below, but is shall be the CONTRACTOR'S responsibility to submit any other items which are required in the Contract Documents:

1. Written Test results of project components.

2. Performance affidavits for equipment and materials.

3. Operation and Maintenance Manuals for equipment.

4. Record Drawings: During the entire construction operation, the CONTRACTOR shall maintain records of all deviations from the Drawings and Specifications and shall prepare therefrom record drawings showing correctly and accurately all changes and deviations from the Work made during construction to reflect the Work as it was actually constructed. These drawings shall conform to recognized industry standards of drafting, shall be neat and legible, and provided in both electronic (AutoCAD “dwg”) file format

and hardcopies signed and sealed by a professional Land Surveyor registered in the State of Florida.

5. Written guarantees, where required.

6. Certificates of inspection and acceptance by local governing agencies having jurisdiction.

7. Releases from all parties who are entitled to claims against the subject project, property, or improvement pursuant to the provisions of law.

1.04 PUNCH LISTS

A. Final cleaning and repairing shall be scheduled upon completion of the project.

B. The ENGINEER will make his final inspection whenever the CONTRACTOR has notified the ENGINEER that the work is ready for the inspection. Any work not found acceptable and requiring cleaning, repair and/or replacement will be noted on the "Punch" list. Work that has been inspected and accepted by the ENGINEER shall be maintained by the CONTRACTOR, until final acceptance of the entire project.

C. Whenever the CONTRACTOR has completed the items on the punch list, he shall again notify the ENGINEER that it is ready for final inspection. This procedure will continue until the entire project is accepted by the ENGINEER. The "Final Payment" will not be processed until the entire project has been accepted by the ENGINEER and all of the requirements in previous Article 1.03 "Final Submittals" have been satisfied.

1.05 MAINTENANCE AND GUARANTEE

A. The CONTRACTOR shall comply with all maintenance and guarantee requirements of the Contract Documents.

B. Replacement of earth fill or backfill, where it has settled below the required finish elevations, shall be considered as a part of such required repair work, and any repair or resurfacing constructed by the CONTRACTOR which becomes necessary by reason of such settlement shall likewise be considered as a part of such required repair work unless the CONTRACTOR shall have obtained a statement in writing from the affected private CITY or public agency releasing the CITY from further responsibility in connection with such repair or resurfacing.

C. The CONTRACTOR shall make all repairs and replacements promptly upon receipt of written order from the CITY. If the CONTRACTOR fails to make such repairs or replacements promptly, the CITY reserves the right to do the Work and the CONTRACTOR and his surety shall be liable to the CITY for the cost thereof.

1.06 TOUCH-UP AND REPAIR

A. The CONTRACTOR shall touch-up and repair damage to all field painted and factory finished equipment. Touch-up of equipment panels, etc., shall match as nearly as possible the original finish. If in the opinion of the ENGINEER the touch-up work is not satisfactory, the CONTRACTOR shall repaint the item. CONTRACTOR shall also furnish additional paint as defined in Section 09900.

1.07 FINAL CLEANUP

A. The CONTRACTOR shall promptly remove from the vicinity of the completed Work, all rubbish, unused materials, concrete forms, construction equipment, and temporary structures and facilities used during construction. Final acceptance of the Work by the CITY will be withheld until the CONTRACTOR has satisfactorily complied with the foregoing requirements for final cleanup of the project site.

PART 2 -- PRODUCTS (Not Used)

PART 3 -- EXECUTION (Not Used)

- END OF SECTION -

SECTION 01740

PERMITS

Part 1 - GENERAL

1.01 General:

A. The Contractor shall obtain and pay for all permits and fees in connection with the work. The Contractor shall also initiate the City's review and secure City approval prior to commencement of the work. Inspection by City personnel is required in addition to, not in lieu of, other municipal, county, state and/or federal regulatory agency inspections. No project will be accepted until it has passed all inspections, including pavement installation or replacement.

B. The Contractor shall familiarize himself with, and comply with, all requirements of required permits governing all work under this Contract. The Contractor's particular attention is called to any Special Conditions of the permits relating to construction procedures, excavation and backfill requirements, open trench restrictions, turbidity control, traffic control, pavement restoration and all other general and special conditions. In the event any of the conditions of the permits are in conflict with the requirements of these Specifications, the most stringent conditions shall take precedence.

C. Any deviations from the Plans, Specifications or required permits, must first be approved by the City even if approval for the change has been given by the permitting agency.

D. The Contractor shall fully assume all obligations and responsibilities, monetary and otherwise, imposed by the permits throughout the life of the project, including but not limited to:

1. Proper maintenance of permit documentation and field records
2. Proper maintenance of all permit-required field controls, including but not limited to the following:

    (a) Chemical spill prevention
    (b) Erosion, sedimentation, turbidity and dust retention
    (c) Protection of storm drainage facilities
    (d) Temporary vehicular and pedestrian traffic controls

3. Payment of fines resulting from permit non-compliance
4. Maintaining active permits and obtaining permit extensions when needed
5. Providing certifications of all materials and equipment installed
6. Performing successful inspections and tests required by the permits

7. Correcting any work that is not in compliance with permits
8. Performing successful equipment start-ups
9. Providing Operation and Maintenance (O&M) manuals for installed equipment as required by permits
10. Repair of any permanent traffic controls impacted by Contractor
11. Close-out of all permits

E. All surveying required by the project permits will be done by the Contractor's Florida registered Land Surveyor. This includes staking out limits of construction.

Part 2 - PRODUCTS

(Not Used)

Part 3 - EXECUTION

(Not Used)

END OF SECTION

SECTION 02000

WATER DISTRIBUTION SYSTEM

Part 1 - GENERAL

1.01 SCOPE

A. The purpose of these Specifications is to establish uniform requirements for material and installation procedures for water mains. The City of Hollywood Department of Public Utilities (City) does not permit the use of 10-inch, 14-inch or 18-inch pipe, fittings or valves, except as may be approved for connections to existing mains. References herein to pipe, fittings and valves in these size ranges are for informational purposes only. Only those features which are considered necessary to provide acceptable materials and a satisfactory installation have been included.
B. This Specification does not purport to cover all material or installation procedures which may be required, whether by the nature of the proposed work, or by the City, or by other regulatory agencies.
C. It is intent of the City to obtain a complete and working installation under this project, and any items of labor, equipment or materials which may reasonably be assumed as necessary to accomplish this end shall be supplied whether or not they are specifically shown on the Plans or stated herein.

1.02 QUALITY ASSURANCE

A. All material and installation shall be in accordance with the City's Standard Specifications and Details.
B. The material and installation for this project shall be in full compliance with all applicable standards listed in Section 01090, "Applicable Standards and Codes".
C. In accordance with the “Reduction of Lead in Drinking Water Act” (Act) enacted by the USEPA on January 4, 2011, effective January 4, 2014 all piping, fittings, fixtures, valves, and other appurtenances used in potable water supply and distribution systems shall be “lead free” as defined in Section 1417(d) of the Safe Drinking Water Act (SDWA). All requirements of the Act as it relates to the work under this Contract shall be strictly adhered to.
D. All ductile iron piping, fittings, valves and other appurtenances shall be manufactured in the United States.
E. Bolts for buried installations east of U.S. 1 shall be 316 stainless steel. Bolts for use in buried installations west of U.S. 1 shall be carbon steel. All bolts shall be manufactured in the United States.
F. All bolts for water valves shall be A-316 stainless steel.

1.03 PROJECT APPROVAL

A. The approval of the City, as defined in the Contract Documents, shall be secured prior to any construction related activity.

1.04 SPECIAL CONDITIONS

A. The work shall proceed in accordance with the following specification sections, bound herein:

1. Section 01010 – Summary of Work
2. Section 01510 - Temporary Utility Services and Staging Area
3. Section 01530 – Protection of Existing Facilities
4. Section 01550 - Site Access and Storage
5. Section 01570 – Traffic Regulations and Maintenance of Traffic
6. Section 01600 – Equipment and Materials

B. Water for construction shall be provided in accordance with Section 01510.

1.05 PERMITS, INSPECTIONS AND FEES

A. The Contractor shall obtain and pay for all permits, official inspections and all other official fees, in connection with the work, in accordance with Section 01740, "Permits".
B. Inspection by CITY personnel is required in addition to, not in lieu of, municipal and other County department inspections (if any).
C. No installation will be accepted until it has passed all inspections, including pavement installation or replacement.

1.06 PRECONSTRUCTION CONFERENCE

A. Preconstruction Conference is not required for routine and emergency repair services.

1.07 SUBMITTALS

A. The Contractor shall submit all shop drawings in accordance with Section 01300, “Submittals”.
B. The Contractor shall furnish Record Drawings ("as-builts"), other Project Record Documents, operating and maintenance (O&M) manuals/instructions and all other submittals in accordance with Section 01300, “Submittals”.
C. Where the Specifications require test certification or certification that certain products or material furnished are as specified, the Contractor shall deliver such certification to the City. No material or equipment shall be approved for use in the work until individual certification has been received.

1.08 SAFETY REQUIREMENTS

A. The Contractor shall conduct the work in compliance with all applicable provisions of the Occupational Safety and Health Act of 1970, in general, and any subsequent amendments and revisions thereto and specifically to the provisions concerning confined space entry. The Contractor shall comply with all provisions of the State of Florida Trench Safety Act (TSA).
B. The Contractor shall conduct his operations in such a manner, utilizing warning devices such as traffic cones, barricades and warning lights, and personnel such as flagmen and uniformed police officers, that the public is given adequate warning of hazards of the work site as may be deemed necessary by the County and/or the Engineer. See Section 01570, "Traffic Regulations and Maintenance of Traffic".
C. In the instance of men working within the manholes, the Contractor shall provide safety provisions to cover any possible consequences of structural failure and/or flooding. Such provisions might take the form of, but not be limited to, ladder nearby and in position to permit rapid egress; safety harness; stand-by pumping equipment; extra air supplies; and such other measures as the situation and good construction practices might indicate.
D. Certain products specified in these Specifications contain warnings by the manufacturers that under certain conditions, if instructions for use of the product are not followed, a hazardous condition may exist. It is the Contractor's responsibility to instruct his workmen in the safe use of the product, or any product substitution.

Part 2 - PRODUCTS

2.01 GENERAL

A. The general requirements specified herein shall apply to all items of material and equipment, in addition to the Specifications for individual items appearing in PART 2, "PRODUCTS", of this section.
B. All material for use in the Project shall be new and of recent domestic manufacture and shall be the products of reliable manufacturers or suppliers who, unless otherwise specified, have been regularly engaged in the manufacture of such materials and equipment for at least five (5) years.
C. All fittings and components shall, wherever possible, be standard stock articles of well-known manufacturers.
D. Where the Specifications designate the products of a particular manufacturer, the product specified has been found suitable for the intended use, but, unless

otherwise provided, articles or products of similar characteristics may be offered for the approval of the CITY, upon approval by the Engineer of Record.

E. Copies of complete descriptive data shall be furnished regarding all material, consisting of dimension drawings, catalog references and other information necessary to clearly identify and evaluate each article.

F. When substitutions are permitted, the Contractor shall make all necessary changes in adjacent or connected structures and equipment, at his expense.

G. Unless otherwise specified, all steel bolts, nuts, washers and all other miscellaneous ferrous metal items (except ductile iron and stainless steel) furnished by the Contractor shall be hot-dip galvanized in accordance with ASTM A386, "Zinc Coating (Hot-Dip) on Assembled Steel Products" and ASTM A385, "Providing High-Quality Zinc Coatings (Hot-Dip)". Where the word "galvanized" or its abbreviation is used on the Plans or in the Specifications, it shall mean hot-dip galvanized. Fabricated items shall be hot-dip galvanized after fabrication. Internal threads shall be tapped or re-tapped after galvanizing.

H. Where miscellaneous materials are required for a complete installation, the Contractor shall provide such materials in conformance with Section 15001, "Services and Miscellaneous Fittings".

I. The requirements of Section 01600, "Equipment and Materials" shall be strictly adhered to, where applicable.

2.02 CASTINGS

A. GENERAL

1. Material used in the manufacture of the castings shall conform to ASTM A48, "Gray Iron Castings", for Class 30 iron. Manhole and valve box covers shall have a roadway type surface.
2. Valve boxes and covers for use with all main line valves, hydrant valves, air release devices and flushing valve outlets shall be in compliance with Section 15100, “Valves General”, and Section 15102, “Tapping Sleeves and Tapping Valves”.
3. Castings shall be furnished unpainted with shot blasted finish.

B. METER BOX COVERS

Meter box covers shall be as indicated in Part 2.26, “Meter Box Covers”, of Section 15001, “Water Services and Miscellaneous Fittings”.

2.03 BRICK

A. Concrete brick shall conform to ASTM Standard C55 "Concrete Building Brick". Clay brick may be substituted for concrete brick. Clay brick shall conform to ASTM Standard C62, "Building Brick (Solid Masonry Units Made from Clay or Shale)".
B. Bricks shall have true edges and sharp corners and shall have been cured for at least 14 days before being placed.

2.04 CONCRETE, MORTAR AND GROUT

See Section 03315, “Grout"

2.05 FIRE HYDRANTS

See Part 2.32, "Fire Hydrants", of Section 15001, “Water Services and Miscellaneous Fittings”.

2.06 METER BOXES, SECTIONAL PLATES AND VAULTS

See Part 2.26, "Meter Boxes and Vaults for Water Service", of Section 15001, “Water Services and Miscellaneous Fittings”.

2.07 METER VALVES

See Section 15001, "Water Services and Miscellaneous Fittings"

2.08 PIPE AND FITTINGS - CAST DUCTILE IRON

See Section 15060, “Piping and Fittings”

2.09 PIPE AND FITTINGS - GALVANIZED STEEL

See Section 15060, "Piping and Fittings".

2.10 PIPE AND FITTINGS - POLY (VINYL CHLORIDE) (PVC)

See Section 15060, "Piping and Fittings".

2.11 STEEL CASING PIPE (Not USED)

2.12 REINFORCING STEEL

A. Bar reinforcement for concrete structure shall conform to the requirements of ASTM Standard A615, Deformed and Plain Billet-Steel Bars for concrete Reinforcement", Grade 60, Deformed, except that steel manufactured by the Bessemer Process will not be accepted. Wire mesh reinforcing for concrete structures shall be welded wire fabric meeting the requirements of ASTM

Standard A185 "Steel Welded Wire Fabric, Plain, for Concrete Reinforcement".

B. The Contractor shall furnish the CITY with the manufacturer's test certificates showing the steel to meet the above requirements, in addition to which the Engineer may take representative samples from the material on the job and have them tested by an independent testing laboratory.
C. Completely detailed shop drawings and bending schedules shall be submitted by the Contractor for the approval of the CITY. Such approval shall be obtained before the bars are cut and bent.

2.13 STRUCTURAL STEEL

A. All structural steel shall be of new stock, and shall meet the requirements of ASTM A36, "Structural Steel". The Contractor shall furnish the CITY with manufacturer's test certificates showing that the steel has met the above requirements, in addition to which the CITY may take representative samples from the material on the job and have them analyzed by an independent testing laboratory.
B. Steel vault covers shall conform to ASTM A36 for material, and shall have the name of the manufacturer and date of manufacture permanently marked on the bottom side of the covers in letters 3/4-inch in size. The plate thickness of each item shall be as indicated in the Standard Details, exclusive of projecting lugs. The covers shall have reading lids, a non-skid diamond surface pattern and shall be non-rocking. Sizes, configurations and type of reading lids are shown in the Standard Details. Following fabrication of the covers, including reading lids and permanent markings, they shall be thoroughly cleaned and hot-dip galvanized.
C. All steel vault covers and hardware, including pipe support brackets, pipe straps, and pedestrian guards with the expanded metal fabric, and all nuts, bolts and washers for canal crossings, shall be hot-dip galvanized after fabrication in accordance with ASTM A386.

2.14 TAPPING SLEEVES

See Section 15102, "Tapping Sleeves and Tapping Valves"

2.15 VALVES

A. Gate Valves - Section 15100
B. Meter Valves - Section 15001
C. Plug Valves - Section 15100
D. Tapping Valves - Section 15102

E. Other miscellaneous valves - Section 15001

2.16 BACKFILL AND EMBEDMENT MATERIAL

Backfill, Select Backfill and Embedment material, for bedding, shall be as specified in Section 02222.

2.17 MISCELLANEOUS MATERIAL

A. Section 15001 specifies material necessary for a complete installation, not specified herein. These materials, including the following, shall be furnished and installed by the Contractor, when required, whether shown on the Plans or not:

1. Anchor bolts, nuts and washers
2. Banding straps for pipe skids
3. Blind flanges, cast iron
4. Copper tubing
5. Corporation stops
6. Coupling adapters
7. Gasket lubricant
8. Grout for boring and jacking (if required)
9. Guard post for fire hydrants
10. Joint materials for flanged pipe, valves and fittings
11. Meter couplings
12. Paint, for fire hydrants and guard posts
13. Polyethylene encasement material
14. Polyethylene sheets for concrete anchors
15. Riprap
16. Roofing felt
17. Sand for casing
18. Service insulator assembly
19. Street elbow (90 Degrees)
20. Tie rods
21. Timber skids and blocking
22. Zinc rich paint (for galvanizing items with minor damage)

Part 3 - EXECUTION

3.01 CONSTRUCTION METHODS

A. The Contractor's Registered Land Surveyor shall establish the line and grade in the field for the pipeline. Except as otherwise approved by the CITY, line and grade shall consist of establishing all points of bend and other stations not more than 100 feet apart along the proposed centerline of the pipe, or along a stationed offset line as shown on the Plans, marked by a nail in a metal cap if in pavement, with the station painted nearby or by a nail in the top of a wooden stake driven flush with the ground with the station marked on a flag stake nearby, if not in pavement. The Contractor shall install the pipe to the lines and grades shown on the Plans without help from the CITY, and shall supply all equipment and personnel necessary to accomplish this end.

B. The Contractor shall make his equipment and men available to the Inspector for spot checking the accuracy of the pipe laying but shall not rely on the Inspector to set each pipe and fitting for him. The Inspector shall require the pipe to be brought within the tolerances specified in subsection 3.04, "Installation of Pipe and Fittings," herein, before the backfill is placed. If, due to unforeseen conditions, the line or grade of the pipe has to be changed from the planned location, the pipe shall not be concealed until the Inspector has noted the actual location, and the Contractor shall record the same for use in the preparation of Record Drawings.

C. The ends of existing mains shall be temporarily capped or plugged and anchored to keep them clean and the joints from blowing apart from internal pressure until the new main can be connected to them.

D. Where existing paving is damaged or removed by the Contractor, temporary paving shall be placed the same day as the ditch backfill and it shall be replaced with permanent paving, where shown on the Plans, within thirty (30) days.

E. In addition to specific construction methods specified elsewhere, the following general requirements shall apply to the work under this project.

    1. Pipe and fittings shall at all times be handled with great care to avoid damage. In loading and unloading, they shall be lifted with cranes or hoists or slid or rolled on skidways in such manner as to avoid shock. Under no circumstances shall this material be dropped or allowed to roll or slide against obstructions. Pipe and other material shall be distributed along the right-of-way in advance of installation only to the extent approved by the CITY. Such materials shall be so placed as to keep obstruction to traffic at a minimum.
    2. Any work within the pipe and fittings shall be performed with care to prevent damage to the lining. Damaged lining shall be repaired or the pipe section or fitting replaced as required by the CITY. No cables, lifting arms, hooks or other devices shall be inserted into the pipe or fitting. All lifting,

pulling or pushing mechanisms shall be applied to the exterior of the pipe or fitting.

3. The Contractor's attention is called to the fact that connections to existing mains will probably involve the removal of a concrete anchor and cast iron plug; also that the existing mains may be cast iron with poured lead sulfur compound, or rubber gasket-type joints, concrete with flanged outlet connections, galvanized iron with threaded joints, or others. The Contractor should be equipped with the proper tools and equipment to make connections to any one or more of these existing mains.
4. Where required by the CITY and at his discretion, the Contractor shall eliminate dust annoyance to adjacent property owners by sprinkling his work area with water or by other approved means.

F. When mains are to be installed within existing street areas, the Contractor shall limit the amount of ditch open at any one time to one block (approximately 600 feet). The work in each block, including excavation, pipe laying, backfilling and temporary paving shall be completed before proceeding with the work in the next block.

G. Boring and jacking operations and trenches remaining open to facilitate the repair of existing underground utilities damaged by the Contractor during excavation shall not be deemed a portion of the allowable 600 feet of open trench, unless otherwise decided by the CITY at its discretion.

H. When mains are to be installed within existing street areas, the Contractor may employ more than one installation crew on the Project but not less than 1200 feet shall separate any two open trench sections as defined hereinbefore.

3.02 EXCAVATION

See Section 02222, "Excavation and Backfill for Utilities”

3.03 WATER SERVICE INSTALLATIONS

See Section 02515, "Water Service Connections and Transfers"

3.04 INSTALLATION OF PIPE AND FITTINGS

A. The centerline of the pipe shall not vary by more than two inches from the location shown on the Plans and the top of the pipe shall not vary by more than two inches from the established grade, except at points where this tolerance must be changed to clear obstructions or make connections. Deviation from this location will be permitted only upon approval from the CITY.

B. Upon satisfactory excavation of the pipe trench and completion of the pipe bedding, up to the level of the outside bottom of the proposed pipe barrel, recesses for the pipe bells, or couplings, shall be excavated by hand digging. When the pipe is laid in the prepared trench, true to line and grade, the pipe barrel shall receive continuous, uniform support and no pressure will be exerted on the pipe joints from the trench bottom. Placing and compacting the bedding up to the level of the lower one-third of the pipe barrel shall immediately follow the installation of the pipe.

C. The interior of the pipes shall be thoroughly cleaned of all foreign matter before being gently lowered into the trench and shall be kept clean during laying operations by means of plugs or other approved methods. During suspension of work for any reason at any time, a suitable stopper shall be placed in the end of the pipe last laid to prevent mud or other foreign material from entering the pipe. Any pipe found defective shall be immediately removed and replaced with sound pipe.

D. Lines shall be laid straight and depth of cover shall be maintained as shown on the Plans. Grades or pipe centerline elevations are shown on the Plans. The Contractor will be permitted to use surveying instruments to maintain alignment and grade. At least one elevation shot shall be taken every one hundred feet (100') or portion thereof and deviation along the pipeline.

E. All bends, tees and plugs shall be backed with concrete thrust blocks to undisturbed ground where indicated on the Plans. Encasement type thrust anchors and collars shall be placed where indicated on the Plans. The bearing area and/or volume of concrete in the anchors and blocks shall be as shown on the Plans or Standards.

F. All bolts, nuts, gaskets and other joint materials for use in the pipeline shall be properly protected.

G. Gaskets shall be properly stored, and care shall be exercised to keep them away from heat, light, oil, gasoline or other petroleum products. Gaskets shall be kept clean at all times and not handled with greasy or dirty hands. Gaskets shall be installed just prior to installation of pipe.

H. The joints of all pipelines shall be properly homed. The particular joint used shall be approved by the Engineer prior to installation.

I. Unless otherwise directed, pipe shall be laid with the bell ends facing in the direction of laying; and for lines on an appreciable slope, the bells shall, at the discretion of the Engineer, face upgrade.

J. Push-on, restrained push-on and mechanical joints in ductile cast iron pipe and fittings shall be made in accordance with the manufacturer's standards except as otherwise specified herein. Joints between push-on and mechanical joint pipe and/or fittings shall be made in accordance with AWWA Standard

C600, "Installation of Ductile Iron Water Mains and Their Appurtenances", except that deflection at joints shall not exceed one half of the manufacturer's recommended allowable deflection, or one-half of the allowable deflection specified in AWWA C600, whichever is the lesser amount.

K. Before laying push-on, restrained push-on and mechanical joint pipe and fittings, all lumps, blisters and excess bituminous coating shall be removed from the bell and spigot ends. The outside of each spigot and the inside of each bell shall be wire brushed, and wiped clean and dry. The entire gasket groove area shall be free of bumps or any foreign matter which might displace the gasket. The cleaned spigot and gasket shall not be allowed to touch the trench walls or trench bottom at any time. Vegetable soap lubricant shall be applied in accordance with the pipe manufacturer's recommendations, to aid in making the joint. The workmen shall exercise caution to prevent damage to the gasket or the adherence of grease or particles of sand or dirt. Deflections shall be made only after the joint has been assembled.

L. Flanged joints shall be used only where indicated on the Plans. Before making up flanged joints in the pipeline, the back of each flange under the bolt heads and the face of each flange shall have all lumps, blisters and excess bituminous coating removed and shall be wire brushed and wiped clean and dry. Flange faces shall be kept clean and dry when making up the joint, and the workmen shall exercise caution to prevent damage to the gasket or the adherence of grease or particles of sand or dirt. Bolts and nuts shall be tightened by opposites in order to keep flange faces square with each other, and to insure that bolt stresses are evenly distributed.

M. Bolts and nuts in flanged and mechanical joints shall be tightened in accordance with the recommendations of the pipe manufacturer for a leak-free joint. The workmen shall exercise caution to prevent overstress. Torque wrenches shall be used until, in the opinion of the Engineer, the workmen have become accustomed to the proper amount of pressure to apply on standard wrenches.

N. Cutting of ductile iron pipe for inserting valves, fittings, etc., shall be done by the Contractor in a neat and workmanlike manner without damage to the pipe, the lining, or the coating. Pipe, shall be cut with a mechanical pipe saw. After cutting the pipe, the plain end shall be filed to remove all sharp edges and burrs.

O. The pipe shall be restrained at reaction points as specified and shown on the Plans. The pipe manufacturer shall instruct the Contractor in the making of such joints. In addition, concrete thrust blocks may be required at all bends, tees, plugs and other fittings. Encasement-type thrust anchors and collars shall be placed where indicated on the Plans.

P. Taps into ductile iron pipe for 2-inch or smaller diameter corporation stops shall be made using double strap service saddles. Taps into PVC or C900 pipe for 2-inch or smaller diameter corporation stops shall be made using band saddles. Tapping saddles shall be as specified in Section 15001, “Water Services and Miscellaneous Fittings”. The Contractor shall provide suitable equipment for tapping as approved by the CITY. After the tap has been made, coat the inside of the pipe around the tap with Carboguard 891 White 1898, by Somay Products, or approved equal. Also, after the installation of corporation stop, heavily coat the exposed exterior surfaces of the stop with Carboguard 891 White 1898, by Somay Products, or approved equal.

Q. Any work within the pipe shall be performed with care to prevent damage to the lining. Damaged lining shall be repaired as recommended by the pipe manufacturer or the pipe section replaced as required by the Engineer. No cables, lifting arms or other devices shall be inserted into the pipe. All lifting, pulling, or pushing mechanisms shall be applied to the exterior of the pipe barrel.

R. Unless otherwise approved by the Engineer, the pipeline shall be cleaned by pigging at intervals not to exceed 30 lengths of pipe. Cleaning methods shall meet the Engineer's approval, and must be sufficient to remove silt, rocks, or other debris which may have entered the pipeline during its installation.

S. Polyethylene encasement of ductile iron pipe and fittings, riser pipe and valves, if required by the CITY, shall be installed in accordance with ANSI/AWWA C105/A21.5, "Polyethylene Encasement for Ductile-Iron Piping for Water and Other Liquids", Method A or B.

T. Polyethylene encasement of valves and ductile iron riser pipes, if required by the City, shall be installed in accordance with ANSI/AWWA C105/A21.5, "Polyethylene Encasement for Ductile-Iron Piping for Water and Other Liquids", Method A, B or C.

U. Lines shall be laid straight and depth of cover shall be maintained as shown on the Plans.

V. Grades or pipe centerline elevations are shown on the Plans. The Contractor shall be permitted to use surveying instruments to maintain alignment and grade. At least one elevation shot shall be taken on each length of pipe and recorded. No abrupt changes in direction or grade will be allowed.

3.05 CLEANING, TESTING AND DISINFECTION

See Section 15995, "Pipeline Testing and Disinfection"

3.06 PAINTING (NOT USED)

3.07 SYSTEM IDENTIFICATION

A. All pipe and fittings shall be clearly identified as water mains. The standard color is Cyanine Blue (Carboline, Color No. 2127) for all above ground water system piping and appurtenances.
B. Buried pipes shall be color coded with a blue paint as stated in the Florida Administration Code, Subparagraph 62-555.320(21)(B)3 and as required by the Florida Department of Environmental Protection. If paint is applied during installation of the pipe, the paint shall be applied in a continuous line that runs parallel to the axis pipe and that is located on the top of the pipe. For pipes with an internal diameter of 24-inches or greater, paint shall be applied in continuous lines along each side of the pipe as well as along the top of the pipe.

3.08 FINAL ACCEPTANCE BY CITY

The following conditions must be met prior to acceptance of the Project by the CITY:

A. Where the mains fall within a pavement area, the area shall have the road rock base course placed and compacted prior to testing the mains. Final pavement installation shall be completed prior to acceptance. All castings within a pavement area shall be set with the top surface flush with the new pavement.
B. All mains and appurtenances shall be flushed, pressure tested and disinfected in accordance with Section 15995, “Pipeline testing and Disinfection”. All mains and appurtenances must be approved for service by the Broward County Health Department prior to activaction.
C. All meter boxes and fire hydrants shall be installed within concrete slabs to the dimensions shown in the Standard Details.
D. Acceptance by any other governing agency, if any.
E. Final field inspection and completion of punch list items, if any, to the CITY's satisfaction.
F. Final cleanup of work site in accordance with Section 01700, “Project Closeout”.
G. Delivery and approval of "As Built" record drawings in accordance with Section 01700, “Project Closeout”.
H. Final acceptance by the CITY.

- END OF SECTION -

SECTION 02050

WATER SERVICE CONNECTIONS AND TRANSFERS

Part 1 - GENERAL

1.01 RELATED DOCUMENTS

A. All applicable provisions of the Contract Requirements shall govern the work under this Section.

1.02 WORK INCLUDED

A. This section covers the work necessary for service connections, laying service pipe, casing pipe, making connections to the new water main and to the existing service pipe, testing and flushing, and all incidental work necessary to accomplish the construction.
B. The work includes trench excavation, backfill and compaction, furnishing and installing service clamps, corporation stops or valves, meter yokes or connections, service connection piping, fittings, and appurtenances within the designated limits, testing, flushing, and other incidental work as required for a complete installation. Included are the installation and transfers of 5/8-inch, one (1) inch, 1½ inch, and two (2)-inch meter connections within the limits shown on the plans.
C. The approximate location of service connections to be installed or transferred will be suggested by the CONTRACTOR and approved by the ENGINEER and CITY.
D. All new domestic services shall be Polyethylene tubing per City of Hollywood Standard Detail W-11
E. Contractor shall coordinate all work with City of Hollywood Public Utilities staff.

1.03 RELATED WORK

A. Division 2 as applicable
B. Section 02000 - Water Distribution System.
C. Section 02222 - Excavation and Backfill for Utilities
D. Section 15000 - Piping General
E. Section 15001 - Water Services and Miscellaneous Fittings
F. Section 15100 - Valves, General

Part 2 - PRODUCTS

2.01 EXCAVATION

A. Excavation shall conform to the requirements of Section 02222 - Excavation and Backfill for Utilities.

2.02 BACKFILL

A. Acceptable material excavated from the trench shall be used for trench backfill. Select backfill material for use in the pipe zone,
B. Select backfill shall contain no material larger than ¾-inch in diameter.

2.03 MISCELLANEOUS FITTINGS

A. Refer to Section 15001 – Water Services and Miscellaneous Fittings

2.04 SERVICE CONNECTION SIZE

A. The location and size of service connection to be transferred or installed will be as determined in the field by CONTRACTOR. The meter and meter box will be installed by CONTRACTOR if required. Minimum tap size shall be one (1) inch. If water meter is to be installed by CONTRACTOR, Class III water License Certification is required.

Part 3 - EXECUTION

3.01 TRENCH EXCAVATION AND BACKFILL

A. Conform to the requirements of Section 02222 - Excavation and Backfill for Utilities. Place only select backfill material in the trench within six (6) inches of the service connection pipe or line. Cover around pipe shall be 8 inches or as indicated on the plans. Backfill and compact remainder of trench with excavated material as specified in the referenced section.

3.02 CONNECTION TO MAIN

A. Clean exterior of main of dirt or other foreign matter that may impair the quality of the completed connection. Then place service clamp at the desired location and clamp tight by tightening alternate nuts progressively. Do not place service clamp within one (1) foot of pipe joint or other clamp.
B. Taps shall be made in the pipe by experienced workmen using tools in good repair with the proper adapters for the size main being tapped.

3.03 PREPARATION OF TRENCH

A. Grade the bottom of the trench by hand to the line and grade to which the pipe is to be laid, with proper allowance for special bedding. All other conditions and operations as specified in Section 02222, Excavation and Backfill for Utilities must be adhered to. The trench bottom shall form a continuous and

uniform bearing support for the pipe. A six (6) inch layer of imported earth or other specified material will be required over and under pipe in areas where suitable trench side material is not available.

3.04 UNDERCROSSING OF ASPHALT-SURFACED ROADS

A. Service connection piping under asphalt-surfaced roads shall be bored or jacked. Open cutting of asphalt-surfaced roads is not permitted except at the direction of the ENGINEER. The service connection pipe shall be installed so that it has a minimum cover of two (2) feet with a slight grade sloping away from the water main.

3.05 POLYETHYLENE PLASTIC TUBING

A. Refer to Section 15001 – Water Services and Miscellaneous Fittings

3.06 RECONNECTION OF EXISTING METERS

The work involves existing water services where the meters are to remain in place, but the water service connection is being transferred to a new water main from an existing water main that is being placed out of service.

A. There shall be no water service interruptions without prior notice to the property owner/occupant, and without the authorization of the City.
B. Existing services shall not be disconnected from existing water mains until the new replacement water mains have been completely installed, successfully tested, accepted by the City, and released for service by the Broward County Health Department.
C. Existing water mains serving active potable water services, irrigation systems, fire sprinkler services, fire hydrants, etc., shall remain in service until all existing services and hydrants have been successfully reconnected to the new replacement water mains.
D. Existing metered services that are to be transferred from existing mains to new water mains shall include new water service piping and fittings between the new main and the meter, and shall also include replacement of the existing curb stop as part of the Contract.

3.07 HYDROSTATIC TEST AND LEAKAGE

A. Test service connections and service connection tubing by either testing in conjunction with the main at the test pressure required for the main, or by testing at the normal hydrostatic main pressure after the main has been

completely installed and tested. Inspect visually for leaks and repair any leaks before backfilling. Sufficient sampling points shall be taken from service line connections to assure uniform results throughout the system being tested Duration of the test shall be at least fifteen (15) minutes.

3.08 DISINFECTION

A. Service connection transfers shall be disinfected as follows:

1. Make connection to the main pipeline which shall have been previously hydrostatically tested and disinfected.
2. Prior to connecting plastic tubing to existing copper tubing or meter stop, flush new plastic tubing by fully opening corporation stop and allowing water to run for 2 minutes.
3. Close corporation stop and meter stop, connect new plastic tubing to existing copper tubing or to meter stop, as applicable. Open corporation stop and allow to stand for a minimum of 30 minutes retention period. Open meter stop.

B. The City may put extra chlorine in the water system during the time of service connection transfers to provide sufficient chlorine residual to adequately disinfect service connections when the above procedure is followed.

- END OF SECTION -

SECTION 02060

SANITARY SEWERAGE

Part 1 - GENERAL

1.01 SYSTEM DESCRIPTION

A. These Specifications shall govern the design, materials and installation requirements for gravity sanitary sewer systems constructed within the City of Hollywood's service area when using Poly Vinyl Chloride (PVC) pipe and fittings, Vitrified Clay (VCP) pipe and fittings, or Ductile Iron (DIP) pipe and fittings.
B. This Specification does not purport to cover all material or installation procedures which may be required, whether by the nature of the proposed work, or by the City, or by other regulatory agencies.
C. It is intent of the City to obtain a complete and working installation under this project, and any items of labor, equipment or materials which may reasonably be assumed as necessary to accomplish this end shall be supplied, whether or not they are specifically shown on the Plans or stated herein.

1.02 RELATED WORK SPECIFIED ELSEWHERE

A. Section 01090 – Applicable Standards and Codes
B. Section 01300 - Submittals
C. Section 01400 – Testing and Inspection
D. Section 01570 - Traffic Regulations and Maintenance of Traffic
E. All other applicable Division 1 requirements

1.03 SUBMITTALS

A. Submit manufacturers' literature and data for all materials.
B. Submit drawings accurately showing wastewater collection systems and related site improvements in their installed locations prior to the placement of any asphalt or concrete pavement.
C. Submit complete "as-built" information in the form of Project Record Documents as required by Section 01300, "Submittals":

    1. Maintain accurate, clear, legible and complete records forming a true representation of the Work completed and in progress.
    2. Provide drawing and specification documentation relative to:

        (a) Center of manholes, valves, services and fittings
        (b) Vertical and horizontal locations of all fittings, cleanouts, and connection points.
        (c) Pipe length, size, and material type.

(d) Television inspection and other test results.
(e) Dimensioned locations and elevations of all other related improvements and system components.

1.04 QUALITY ASSURANCE

A. All material and installation shall be in accordance with the City of Hollywood Department of Public Utilities Specifications and Standard Details.
B. The material and installation for this project shall be in full compliance with all applicable standards listed in Section 01090, "Applicable Standards and Codes".
C. Survey Data: Base all elevations on National Geodetic Vertical Datum of 1929 (NGVD).
D. Inspections: Contractor shall notify the City of Hollywood, Engineer, and any other local, state or federal agencies having jurisdiction at least 48 hours prior to arrange the required inspection of the gravity sewer system.

1.05 DESIGN REQUIREMENTS

A. General:

1. Gravity sanitary sewer systems shall be designed in accordance with State of Florida Department of Environmental Protection (FDEP) rules for wastewater facilities (Chapter 62-604), with the Recommended Standards for Wastewater Facilities (“Ten States Standards”), and the recommendations of Chapter 12 of ASCE Manual No. 37, "Sewer Design and Construction", except as otherwise provided herein. Wet wells and manholes shall be classified as hazardous areas, Class 1, Division 2, Group C.
2. In addition, systems shall be designed in accordance with the requirements of the Broward County Environmental Protection and Growth Management Department Development and Environmental Regulation Division, the requirements of the latest edition of the Florida Building Code and the City of Hollywood Department of Public Utilities Standards and Specifications.
3. Manhole to manhole runs shall be kept in the range of no more than 400 feet without permission.
4. Minimum allowable slopes for gravity sewer shall be such as to maintain two feet per second minimum velocity when flowing full, or half full, as calculated using Manning’s Equation and a roughness coefficient of 0.013.

5. Minimum slope for terminal runs shall be 0.40 percent for eight inch pipe. This slope shall be maintained for a minimum of 300 feet and longer if loading is abnormally light.
6. Design shall be performed by experienced personnel who have previously designed sewerage collection systems in the State of Florida. All design work submitted for approval shall be signed, sealed and dated by a registered professional engineer licensed to practice in the State of Florida.

1.06 SAFETY REQUIREMENTS

A. The Contractor shall be in compliance with all applicable provisions of the Occupational Safety and Health Act of 1970, in general, and any subsequent amendments and revisions thereto, especially the provisions concerning confined space entry.
B. The Contractor's personnel will be in the vicinity of raw sewage. For their own protection, the Contractor shall check with the Health Department, and based upon their recommendation, shall have his personnel properly immunized against disease.
C. Under this project, personnel may be required to enter existing manholes and/or sewers to perform work. Before entering, the Contractor shall be in compliance with OSHA, and shall make certain that above-ground safety personnel be on duty at all times when someone enters or works in a manhole/sewer, and shall test the air within the manhole/sewer with a combination oxygen deficiency meter/explosion meter to determine oxygen content and explosion potential. A test for the presence of hydrogen sulfide shall also be performed. The work area must be ventilated mechanically by the use of an air blower before entry and during occupancy, to insure that an adequate quantity of oxygen is supplied to the work area.
D. The Contractor shall comply with all requirements of Section 01570, “Traffic Regulations and Maintenance of Traffic”, and shall have the required traffic control devices, flagmen and uniformed police officers in place for the protection of the public and of the workers.
E. In the instance of men working within the manholes, the Contractor shall provide safety provisions to cover any possible consequences of structural failure and/or flooding. Such provisions might take the form of, but not be limited to, ladders in position to permit rapid egress, safety harnesses, stand-by pumping equipment, extra air supplies, and such other measures as the situation and good construction practices might indicate.
F. Certain products specified for use on this project may include warnings from the manufacturers stating that under certain conditions, if instructions for

proper use of the product are not followed, hazardous conditions may arise. It is the Contractor's responsibility to instruct all workmen in the safe use of all specified products or approved substitutes.

Part 2 - PRODUCTS

2.01 GENERAL

A. All material for use in the Project shall be new and of recent domestic manufacture and shall be the products of reliable manufacturers or suppliers who, unless otherwise specified, have been regularly engaged in the manufacture of such materials and equipment for at least five (5) years.
B. All fittings and components shall, wherever possible, be standard stock articles of well-known manufacturers.
C. Where the Specifications designate the products of a particular manufacturer, the product specified has been found suitable for the intended use, but, unless otherwise provided, articles or products of similar characteristics may be offered for the approval of the City.
D. Copies of complete descriptive data shall be furnished regarding all material, consisting of dimension drawings, catalog references and other information necessary to clearly identify each article.
E. When substitutions are permitted, the Contractor shall make all necessary changes in adjacent or connected structures and equipment, at his expense
F. Unless otherwise specified, all bolts, nuts, washers and all other miscellaneous ferrous metal items (except ductile iron) furnished by the Contractor shall be AISI Type 316 stainless. Where miscellaneous materials are required for a complete installation the Contractor shall provide such materials in conformance with Section 15001, "Water Services and Miscellaneous Fittings".

2.02 CASTINGS

A. General:

1. Material used in the manufacture of the castings shall conform to ASTM A48, "Gray Iron Castings", for Class 30 iron. Manhole and valve box covers shall have a roadway or pedestrian type surface as required by location, and shall be non-rocking.
2. Castings shall be delivered unpainted with a shot-blasted finish.

C. Manhole Frames and Covers:

Refer to Section 02070, “Sanitary Sewer Manholes”.

D. Air Release Valve Manhole Frames and Covers:

1. Air release valve (ARV) manhole covers and frames shall be U.S.F. Type 1341 ring with AG-M cover as manufactured by U.S. Foundry, Inc., 8351 NW 93rd Street, Medley, Florida 33166, or approved equal. The smaller cover shall have two adjustable Camlocks for securing it to the larger cover, and four 1”-diameter vent holes to prevent uplift during sudden bursts of air. The covers shall be cast labeled "AIR RELEASE".

E. Clean-out Covers:

1. Clean-outs shall have brass, threaded plugs on 6-inch risers or CISP clean-out extensions set flush with surrounding grade. If the cleanout is within an unpaved area, it shall be set on a 18”x18”x4” thick square concrete collar reinforced with a continuous #3 bar.

2.03 BRICK

A. Clay Brick: Bricks for manhole construction shall be dense, hard burned, common clay brick conforming to ASTM Standard C62, "Building Brick (Solid Masonry Units made from Clay or Shale)", except that brick absorption shall be between 5 and 25 grams of water absorbed in 1 minute by dried brick, set flat face down, in 1/8 inch of water.
B. Concrete Brick: Concrete bricks shall conform to ASTM Standard C55, "Concrete Building Brick".
C. All bricks shall have true edges and sharp corners and shall have been cured for at least 14 days before being placed.
D. Thoroughly wet all brick before laying up.
E. Lay up with shove joint in full beds, thoroughly slushed up with mortar at every corner.

2.04 CONCRETE, MORTAR AND GROUT

See Section 03315, “Grout”, and Section 04060, “Mortar".

2.06 EMBEDMENT MATERIAL

Embedment material for bedding, haunching and initial backfill shall conform to the requirements of Section 02222, “Excavation and Backfill for Utilities”, and Section 02224, “Excavation and Backfill for Structures”.

2.07 MANHOLES

Refer to Section 02070, “Sanitary Sewer Manholes”.

2.08 Sanitary Sewer Pipe and Fittings

A. General:

Pipe for use in gravity sewer systems shall be Ductile Iron lined with polyethylene or ceramic epoxy (Protecto 401), PVC SDR 26, or AWWA C900, C905 PVC as shown on the plans or called out elsewhere herein. For further information on these types of pipe, refer to Section 15060, “Piping and Fittings”.

Part 3 - EXECUTION

3.01 PREPARATION

A. Existing Utilities

1. Provide temporary support, adequate protection and maintenance of all underground and surface utility structures, drains, sewers, and other obstructions encountered in the progress of the Work.
2. Permanently support, relocate, remove, or reconstruct existing utility structures (such as conduits, ducts, pipe branch connections to main sewers, main drains or other structures) where the grade or alignment of the pipe is obstructed Deviations from the required line or grade: Not permitted.
3. Contact the “No-Cuts” Center and verify existing utility field locations at least 48 hours prior to beginning any excavation.
4. Verify the size, location, elevation, and material of all existing utilities within the area of construction.

B. Unloading Materials: Exercise care in unloading and handling pipe, valves, fittings, and all other material.

C. Excavation

1. Excavate pipe trenches to required depths.
2. In general, water distribution lines have a minimum of 36 inches cover.
3. If rock is encountered, excavate to a minimum of 6 inches below bottom of pipe, and backfill trench.
4. Width of trench: Sufficient to allow workmen to perform all operations incidental to constructing the pipeline.
5. Provide hand dug bell holes to permit proper joint making.
6. Pipe bearing on rock: Not Permitted.

3.02 INSTALLATION

A. Install sewer pipe under provisions of ASTM D2321 and the Uni-Bell Plastic Pipe Association's "Recommended Practice for the Installation of PVC Sewer Pipe".
B. Lay pipe commencing at the lowest point, with spigot ends pointing in the direction of flow:

1. Lay all pipes with ends abutting and true to line and grade.
2. Carefully center pipe and form a uniform invert.
3. Lay pipe under provisions of manufacturer's requirements.

C. Lay pipe accurately to the line and grade required for system performance:

1. Clean and dry all surfaces of the portions of the pipe to be jointed or of the factory-made jointing material.
2. Use lubricant, primers, adhesives, etc. as recommended by the pipe or joint manufacturer's specifications.
3. Place, fit, join and adjust jointing materials or factory-fabricated joints in such a manner as to obtain a watertight line.
4. Place sufficient backfill material along each side of the pipe to prevent movement of pipe off line and grade as soon as possible after the joint is made.

D. Plug exposed ends of pipes to prevent earth, water or other substances from entering the pipe when construction is not in progress.
E. Neoprene boot with stainless steel accessories: Grout Harco or similar manhole couplings in place with non-shrink grout at each pipe connection into a manhole wall.
F. Cleanouts: Install at all services exceeding 75 feet in length with cleanouts at the property line, or 5 feet from a building.

G. All sanitary sewer service piping/laterals shall be 6-inch minimum diameter with minimum slope of 1/8-inch (vertical) per foot (horizontal) and 36-inch minimum ground cover.
H. Concrete Encasement of Sewer Pipe:

1. Excavate trenches with mechanical equipment.
2. Provide temporary supports consisting of timber, wedges or masonry prior to formation of the encasement to support the pipe in place.
3. Provide temporary supports of minimum dimensions and support the pipe at not more than 2 places, 1 at the bottom of the barrel of the pipe adjacent to the shoulder of the socket, and the other near the spigot end.
4. After completion of jointing of the pipe has been completed, uniformly pour concrete beneath and on both sides of the pipe. Provide uniform encasement of at least 4 inches thick at all points.

3.03 FIELD QUALITY CONTROL

A. Protect pipe during handling against impact shocks and free falls. Keep pipe clean at all times. Do not use pipe that does not conform to the specifications.
B. Notify the utility company and authorities having jurisdiction at least 48 hours prior to beginning construction in order to arrange inspection of the sanitary sewer.
C. The entire sewer system, including services/laterals and manholes, shall be tested in whole or in sections in accordance with Section 15995, “Testing and Disinfecting Mains”.
D. Temporary Drainage During Construction

1. Construct and maintain temporary drainage facilities, which may be required to provide drainage relief for the new construction without causing abnormal or adverse flooding impacts to the existing or new facilities.
2. Temporary facilities may include swales, pipe, etc. as necessary.

E. Restoration of Surfaces and Structures

1. Restore and replace paving, curbing, sidewalks, fences, sod, survey points, or other disturbed surfaces or structures to a condition equal to that before the work was begun.
2. Restoration of surfaces and structures outside the Owner’s property line: Comply with requirements of the applicable governing agencies.

F. Cleaning Up

1. Remove surplus pipeline material, tools, temporary structures, etc.
2. Dispose of all dirt, rubbish, and excess earth off site.

- END OF SECTION -

SECTION 02100

CLEARING AND GRUBBING

Part 1 - GENERAL

1.01 THE REQUIREMENT

A. The CONTRACTOR shall furnish all materials, equipment and labor necessary to complete all clearing and grubbing as specified herein and in accordance with the Drawings.
B. The CONTRACTOR shall box and protect all trees, shrubs, lawns, and the like where to be preserved.

1.02 STANDARDS AND REGULATIONS

A. The CONTRACTOR shall comply with all state, county and local regulations regarding disposal of debris resulting from the clearing and grubbing operation.
B. The CONTRACTOR shall dispose of debris resulting from the clearing and grubbing operation at off-site locations in a lawful manner.

1.03 PROTECTION OF PERSONS AND PROPERTY

A. All work shall be performed in such a manner to protect all personnel, workmen, pedestrians, and adjacent property and structures from possible injury or damage.
B. Required wind load calculation for equipment mounted outside. CONTRACTOR to submit equipment support detail for approval.

Part 2 - PRODUCTS (Not Used)

Part 3 - EXECUTION

3.01 GENERAL

A. The Work specified in this section consists of clearing and grubbing within the areas required in the easements and right-of-ways to install the pipeline and appurtenances. The Work shall include the disposal of the resultant products and debris in areas provided by the CONTRACTOR unless noted otherwise.
B. Property obstructions which are to remain in place, such as buildings, sewers, drains, pipelines, conduits, poles, walls, posts, bridges, etc., are to be carefully protected from injury and are not to be displaced, except for unusual cases when so specified by the ENGINEER.

C. Standard clearing and grubbing shall consist of the complete removal and disposal of all trees, shrubs, timber, brush, stumps, roots, grass, weeds, rubbish and other obstructions resting on or protruding through the surface of the existing ground and the surface of excavated areas.
D. Excavation resulting from the removal of trees, roots, and the like shall be filled with suitable material, as approved by the ENGINEER, and thoroughly compacted per the requirements contained in Section 02222 – Excavation and Backfill for Utilities and Section 02224 – Excavation and Backfill for Structures.

3.02 DISPOSAL OF MATERIALS

A. Timber, stumps, muck, brush, roots, rubbish and other objectionable material resulting from clearing and grubbing shall be disposed of in a lawful manner, off site by the CONTRACTOR.
B. Burning of any debris resulting from the clearing and grubbing work will not be permitted at the site.

- END OF SECTION -

SECTION 02140

DEWATERING

Part 1 - GENERAL

1.01 DESCRIPTION

A. Design, furnish, operate, maintain, and remove temporary dewatering systems to control groundwater and surface water to maintain stable, undisturbed subgrades, and permit work to be performed under dry and stable conditions. Work to be done as part of dewatering includes, but is not limited to:

1. Lower the groundwater level
2. Lower hydrostatic pressure.
3. Prevent surface water from entering the excavation during construction.
4. Implement erosion control measures for disposing of discharge water.

B. Groundwater within the excavation area shall be lowered to at least 1 foot below the lowest excavation levels as specified and as indicated.
C. Common groundwater recharge methods include, but are not limited to, deep wells, large sumps or any combination thereof.
D. The Contractor shall obtain the required permits for discharge from the Contractor's dewatering systems in accordance with Broward County Water Management Division and South Florida Water Management District (SFWMD) requirements. The Contractor shall conform with all permit requirements.

1.02 RELATED WORK

A. Section 01560: Special Controls
B. Section 02210 - Earth Excavation, Backfill, Fill and Grading
C. Section 02222 – Excavation and Backfill for Utilities.

1.03 SUBMITTALS

A. Submit the following in accordance with Section 01300, "Submittals":

1. Qualification of the Contractor's dewatering specialist's or firm's qualifications a minimum of four (4) weeks prior to execution of any dewatering. The submittal shall include, but not be limited to:

(a) Qualifications of specialist's or firm's Registered Professional Engineer as specified in Paragraph 1.04 B.

(b) Qualifications of specialist's or firm's field representative, as specified in paragraph 1.04 B, who shall oversee the installation, operation and maintenance of the dewatering system.

2. Submit a dewatering plan at least two weeks prior to start of any dewatering operation. Do not submit design calculations. The review will be only for the information of the CITY and third parties for an overall understanding of the project relating to access, maintenance of existing facilities and proper utilization of the site. The Contractor shall remain responsible for the adequacy and safety of the means, methods and sequencing of construction. The plan shall include the following items as a minimum:

   (a) Dewatering plan and details stamped and signed by a Registered Professional Engineer.
   (b) Certificate of Design: Refer to Section 01300, “Submittals”
   (c) A list of equipment including, but not limited to, pumps, prime movers, and standby equipment.
   (d) Detailed description of dewatering, maintenance, and system removal procedures.
   (e) Monitoring plan and details, including, but not limited to, number and locations of observation wells, and geotechnical instruments such as settlement markers and piezometers, and frequency of reading the monitoring devices.
   (f) Erosion/sedimentation control measures, and methods of disposal of pumped water.
   (g) List of all applicable laws, regulations, rules, and codes to which dewatering design conforms.
   (h) List of assumptions made for design of dewatering and for groundwater recharge systems, including but not limited to groundwater levels, soil profile, permeability, and duration of pumping and or recharge.
   (i) Turbidity measurements in receiving waters as required by the permit. A turbidity control and monitoring where discharge is to a body of water.

3. Measurement records consisting of observation well groundwater records and the geotechnical instrumentation readings within one day of monitoring.

4. A modified dewatering plan within 24 hours, if open pumping from sumps and ditches results in boils, loss of fines, sinkholes or softening of the ground.

1.04 QUALITY ASSURANCE

A. Provide in accordance with Section 01400 (Testing and Inspection) and as specified.
B. Employ the services of a dewatering specialist or firm having the following qualifications:

1. Have completed at least five (5) successful dewatering projects of equal size and complexity and with equal systems within the last five (5) years.
2. Retain the services of a Florida Registered Professional Engineer having a minimum of five (5) years of experience in the design of well points, deep wells, or equal systems.
3. Retain the services of a field representative having a minimum of five (5) years of experience in installation of well points, deep wells, or equal systems.

C. If subgrade soils are disturbed or become unstable due to dewatering operation or an inadequate dewatering system, notify the CITY's representative, stabilize the subgrade, and modify system to perform as specified at no additional cost to the CITY.
D. Notify the CITY's representative immediately if any settlement or movement is detected on structures. If the settlement or movement is deemed by the CITY's representative to be related to the dewatering, take actions to protect the adjacent structures and submit a modified dewatering plan to the CITY's representative within 24 hours. Implement the modified plan and repair any damage incurred to the adjacent structures at no additional cost to the CITY.
E. If oil and/or other hazardous materials are encountered after dewatering begins, immediately notify the CITY's representative.

1.05 DELIVERY, STORAGE AND HANDLING

A. Provide in accordance with Section 01610 and as specified.

1.06 PROJECT/SITE CONDITIONS

A. Subsurface Conditions: Refer to Geotechnical Report provided specifically for the project. The Contractor is responsible for investigating existing soil

conditions as the Geotechnical Report does not assure all subsurface site conditions are represented.

Part 2 - PRODUCTS

2.01 MATERIALS

A. Provide settlement markers, observation wells, piezometers and/or any other geotechnical instruments in accordance with the submitted dewatering plan.
B. Provide casings, well screens, piping, fittings, pumps, power and other items required for dewatering system.
C. Provide sand and gravel filter around the well screen. Wrapping geotextile fabric directly around the well screen shall not be allowed.
D. When deep wells, well points, or vacuum well points are used, provide pumping units capable of maintaining high vacuum and handling large volumes of air and water at the same time.
E. Provide and store auxiliary dewatering equipment, consisting of pumps and hoses on the site in the event of breakdown, at least one (1) pump for every five (5) used.
F. Provide and maintain erosion/sedimentation control devices as indicated or specified and in accordance with the dewatering plan.
G. Provide temporary pipes, hoses, flumes, or channels for the transport of discharge water to the discharge location.
H. Provide cement grout having a water cement ratio of 1 to 1 by volume.

Part 3 - EXECUTION

3.01 EXECUTION

A. Execution of any earth excavation, installing earth retention systems, and dewatering shall not commence until the related submittals have been reviewed by the CITY' representative with all CITY's representative comments satisfactorily addressed, and the geotechnical instrumentation has been installed.
B. Furnish, install and maintain dewatering system in accordance with the dewatering plan.
C. Carry out dewatering program in such a manner as to prevent undermining or disturbing foundations of existing structures or of work ongoing or previously completed.
D. Do not excavate until the dewatering system is operational.

E. Unless otherwise specified, continue dewatering uninterrupted until all structures, pipes, and appurtenances below groundwater level have been completed such that they will not be floated or otherwise damaged by an increase in groundwater elevation.
F. Discontinue open pumping from sumps and ditches, if such pumping is resulting in boils, loss of fines, softening of the ground, or instability of the slopes. Modify dewatering plan and submit to the CITY's representative at no additional cost to the CITY.
G. Where subgrade materials are disturbed or become unstable due to dewatering operations, remove and replace the materials in accordance with Section 02210 – Earth Excavation, Backfill, Fill and Grading at no additional cost to the CITY.
H. Dewatering Discharge:

1. Install and monitor recharge systems when specified and/or indicated and in accordance with the submitted dewatering plan.
2. Install sand and gravel filters in conjunction with well points and deep wells to prevent the migration of fines from the existing soil during the dewatering operation.
3. Transport pumped or drained water to discharge location without interference to other work, damage to pavement, other surfaces, or property.
4. Provide separately controllable pumping lines.
5. The CITY's representative reserves the right to sample discharge water at any time.
6. Immediately notify the CITY's representative if suspected contaminated groundwater is encountered. Do not pump water found to be contaminated with oil or other hazardous material to the discharge locations.

I. Monitoring Devices and Records:

1. Install, maintain, monitor and take readings from the observation wells and geotechnical instruments in accordance with the dewatering plan.
2. Install settlement markers on structures within the zone of influence for dewatering a distance equal to twice the depth of the excavation, from the closest edge of the excavation. Conduct and report settlement surveys to 0.01 feet.
3. For large rectangular, square or circular mass excavations the zone of influence shall be defined by the actual cone of watering influence corresponding to a 10% increase in effective vertical stress.

J. Install and maintain erosion/sedimentation control devices at the point of discharge as indicated or specified during the pre-construction meeting and in accordance with the dewatering plan.
K. Removal:

1. Do not remove dewatering system without written approval from the Engineer.
2. Backfill and compact sumps or ditches with clean fill in accordance with Section 02210 – Earth Excavation, Backfill, Fill and Grading.
3. All dewatering wells shall be abandoned upon completion of the work, and completely backfilled with cement grout.

3.02 CONTRACT CLOSEOUT:

A. Provide in accordance with Section 01700.

- END OF SECTION -

SECTION 02141

TEMPORARY BYPASS PUMPING SYSTEMS

Part 1 - GENERAL

1.01 SUMMARY:

A. Section Includes: Furnishing all materials, labor, equipment, power, maintenance, etc. to implement a temporary pumping system for the purpose of diverting the existing flow around the work area for the durations specified and disassembly of the bypass pumping system as specified herein.
B. Be responsible for the design, installation and operation of the temporary pumping system. The bypass system shall meet the requirements of all codes and regulatory agencies having jurisdiction.
C. The Contractor is responsible to maintain flow throughout the contract period of construction. Once the Contractor mobilizes, the City cedes responsibilities of any lift station operations to the Contractor until Substantial Completion is reached.

1.02 SYSTEM DESCRIPTION:

A. Design Requirements:

1. Provide bypass pumping systems with firm capacity to handle peak flow conditions, as determined by the ENGINEER.
2. Provide all pumps of adequate size to handle peak flow, and temporary discharge piping to ensure that the total flow can be safely diverted around the area of work. Bypass pumping system will be required to operate 24 hours per day.
3. Provide control system for the sanitary sewage lift station bypass pumping systems, which will run the pump(s) between preset levels. Additional controls are required for high-high level and low-low level alarms, and any pump faults.
4. Provide adequate standby equipment available and ready for immediate operation and use in the event of an emergency or breakdown. One standby pump for each size pump utilized shall be installed at the mainline flow bypassing locations, ready for use in the event of primary pump failure.
5. The bypass pumping system shall be capable of bypassing the flow around the work area as necessary for satisfactory performances of work.
6. Make all arrangements for bypass pumping during the time when the pumping station is shut down for any reason. System must overcome any downstream pressure on discharge.

B. It is essential to the operations of the existing wastewater system that there be no interruption in the flow of sewage throughout the duration of the project. To this end, provide, maintain and operate all temporary facilities such as, pumping equipment (both primary and back-up units as required), conduits, all necessary power, and all other labor and equipment necessary to intercept the wastewater flow before it reaches the point where it would interfere with the work, carry it past the work and return it to the existing wastewater downstream of the work.
C. Provide all necessary means to safely convey the raw wastewater past the work area. Do not stop or impede the main flows under any circumstances.
D. Maintain wastewater flow around the work area in a manner that will not cause surcharging of wastewater, damage to existing pipe line and that will protect public and private property from damage and flooding.
E. Fluid Character: Provide pumping units to pump applicable type of water.
F. Furnish pumps which meet rating capacity and head indicated on Process Pump Schedule.
G. Pumps shall be capable of passing a minimum of a 3-inch non-deformable sphere.

1.03 SUBMITTALS:

A. ENGINEER approval is required for submittals with an “A” designation; submittals having an “FIO” designation are for information only. Provide all submittals, including the following, in accordance with Section 01300, SUBMITTALS.
B. Data:

1. Pump Data:

(a) Pump performance curves. Draw curves for the specified conditions. Include head, brake horsepower, efficiency and required NPSH, all plotted as a function of capacity, from zero to maximum capacity.
(b) Calculations of static lift, friction losses, and flow velocity.
(c) Submit a specific, detailed description of the proposed pumping system.
(d) Submit operating descriptions, component descriptions, control schematics, electrical connection diagrams and general arrangement drawings, for control equipment.

C. Drawings:

1. Shop Drawings:

(a) Submit shop drawings, including arrangement and erection drawings of the equipment and equipment operating characteristics. Include the following:

(1) Submit detailed plans and descriptions outlining all provisions and precautions to be taken regarding the handling of existing flows. The plan shall include schedules, locations elevations, capacities of equipment, materials and all other incidental items necessary and/or required to insure proper protections of the facilities, including protection of the access and bypass pumping locations from damage due to the discharge flows, and compliance with the requirements and all permit conditions

(2) The plan shall include but not be limited to details of the following:

(b) Staging areas for pumps;
(c) Number, size, material, location and method of installation of suction piping;
(d) Number, size, material, location of installation of discharge piping;
(e) Bypass pump sizes, capacity, number of each size to be on site and motor power of fuel requirements;
(f) Standby power generator size, location;
(g) Downstream discharge plan;
(h) Thrust and restraint block sizes and locations;
(i) Sections showing suction and discharge pipe depth, embedment, select fill and special backfill;
(j) Method of noise control for each pump and/or generator;
(k) Any temporary pipe supports and anchoring required;
(l) Design plans and computation for access to bypass pumping locations indicated on the drawings;
(m) Calculations for selection of bypass pumping pipe size;
(n) Schedule for installation of and maintenance of bypass pumping lines;
(o) Plan indicated selection location of bypass pumping line locations.

Part 2 - PRODUCTS

2.01 EQUIPMENT:

A. All pumps used for water by-pass shall be centrifugal self-priming units that do not require the use of foot-valves or Compressor in the priming system. The pumps shall be diesel or electric powered. Pumps shall have sound

attenuation enclosure designed for operation at sound levels of 70 decibels and below. The Contractor is fully responsible for coordinating and obtaining temporary electrical service.

B. All pumps used must be constructed to allow dry running for long periods of time to accommodate the cyclical nature of influent flows. The pumps shall not be hydraulic submersible type.
C. Provide the necessary stop/start control system for each pump. The control system shall remotely alarm the contractor of any problem. The contractor is responsible for responding within one (1) hour to the alarm and correcting the problem.
D. Discharge Piping – in order to prevent the accidental spillage of flows, all discharge systems shall be temporarily constructed of rigid pipe with positive, restrained joints.
E. Under no circumstances will aluminum “Irrigation” type piping and glued PVC pipe be allowed. Discharge hose will only be allowed in short sections and by specific permission from the ENGINEER. Provide piping materials of steel pipe, ductile iron pipe, or fused, high density polyethylene pipe.

2.02 MANUFACTURERS:

A. Acceptable manufacturers are listed below. Other manufacturers of equivalent products may be submitted.

1. Thompson Pump & Manufacturing Co., Inc.

Part 3 - EXECUTION

3.01 PRECAUTIONS:

A. Be responsible for locating any existing utilities in the area selected for installing the bypass pipelines. Locate bypass pipelines to minimize any disturbance to existing utilities and obtain approval of the pipeline locations from the ENGINEER. All costs associated with relocating utilities and obtaining all approvals shall be included in the Contract Price.

3.02 INSTALLATION AND REMOVAL:

A. Make connections to the existing pipe lines and construct temporary bypass pumping structures only at the access location indicated on the drawings and as may be required to provide adequate suction conduit.
B. Plugging or blocking of flows shall incorporate a primary and secondary plugging device. When plugging or blocking is no longer needed for

performance and acceptance or work, it is to be removed in a manner that permits the flow to slowly return to normal without surge, to prevent surcharging or causing other major disturbances downstream.

C. The installation of the bypass pipelines is prohibited in all saltmarsh/wetland areas. The pipeline must be located off streets and sidewalks and on shoulder of the roads. When the bypass pipeline crosses local streets and private driveways, place the bypass pipelines in trenches and cover with temporary pavement. Upon completion of the bypass pumping operations, and after the receipt of written permission from the ENGINEER, remove all the piping, restore all property to pre-construction condition and restore all pavement. Be responsible for obtaining any approvals for placement of the temporary pipeline within public ways from the city.

3.03 FIELD QUALITY CONTROL AND MAINTENANCE:

A. Testing: Perform leakage and pressure tests of the bypass pumping discharge piping using clean water prior to actual operation. Test the piping at a test pressure of 50 psi or anticipated operating pressure multiply by a safety factor of 1.5, whichever is greater. Provide 24 hours notice to the ENGINEER prior to testing.

B. Inspection: Inspect bypass pumping system as needed to ensure that the system is working correctly.

C. Maintenance Service: Insure that the temporary pumping system is properly maintained and a responsible operator is on hand at all times when pumps are operating.

D. Extra Materials:

1. Spare parts for pumps and piping shall be kept on site as required.
2. Adequate hoisting equipment for each pump and accessories shall be maintained on the site.

- END OF SECTION -

SECTION 02210

EARTH EXCAVATION, BACKFILL, FILL AND GRADING

Part 1 - GENERAL

1.01 DESCRIPTION

A. Perform the following earth excavation, backfill, fill and grading as indicated or specified:

1. Make excavations to accommodate piping, conduits, foundations and other structures.
2. Provide materials for backfilling excavations and constructing embankments and fills as indicated and specified.
3. Construct embankments of compacted materials.
4. Grade surfaces to meet finished grades indicated.
5. Immediately notify the Engineer if suspected hazardous materials are encountered and cease operations in that part of work.
6. Immediately stop work and notify the Engineer if historical artifacts or human remains are encountered.
7. Remove boulders within the excavation limits.

1.02 RELATED WORK

A. Section 01560: Temporary Environmental Controls
B. Section 02100 - Clearing and Grubbing
C. Section 03400 - Precast Concrete

1.03 REFERENCES

A. American Society for Testing and Materials (ASTM) Publications:

1. C33: Specification for Concrete Aggregates.
2. C136: Sieve Analysis of Fine and Coarse Aggregates.
3. D421: Practice for Dry Preparation of Soil Samples for Particle Size Analysis and Determination of Soil Constants.
4. D422: Test Method for Particle-Size Analysis of Soils.
5. D1140: Test Method for Amount of Material in Soils Finer than the No. 200 (75 Fm) Sieve.
6. D1556: Test Method for Density and Unit Weight of Soil in Place by the Sand-Cone Method.
7. D1557: Test Method for Laboratory Compaction Characteristics of Soil Using Modified Effort (56,000 ft-lb/ft^3 (600 kN-m/m^3)).
8. D2167: Test Method for Density and Unit Weight of Soil in Place by the Rubber Balloon Method.

9. D2922: Test Method for Density of Soil and Soil-Aggregate in Place by Nuclear Methods. (Shallow Depth).
10. D3017: Test Method for Water Content of Soil and Rock in Place by Nuclear Methods (Shallow Depth).
11. D4318: Test Method for Liquid Limit, Plastic Limit and Plasticity Index of Soils.
12. D4718: Practice for Correction of Unit Weight and Water Content for Soils Containing Oversized Particles.
13. D4944: Test Method for Field Determination of Water (Moisture) Content of Soil by the Calcium Carbide Pressure Tester Method.
14. D4959: Test Method for Field Determination of Water (Moisture) Content of Soil by Direct Heating Method.
15. D5080: Test Method for Rapid Determination of Percent Compaction.

B. Occupational Safety and Health Administration (OSHA) Standards and Regulations contained in Title 29: Subpart P - Excavations, Trenching and Shoring

1.04 DEFINITIONS

A. Percentage of compaction is defined as the ratio of the field dry density, as determined by ASTM D1556 to the maximum dry density determined by ASTM D1557 Procedure C, multiplied by 100.
B. Proof Roll: Compaction with a minimum of 4 passes of a vibratory steel drum or rubber tire roller. Vibratory plate compactors shall be used in small areas where vibratory steel drum or rubber tire roller cannot be used.
C. Acceptable Material: Material which does not contain organic silt or organic clay, peat, vegetation, wood or roots, stones or rock fragments over 6-inch [15 cm] in diameter, porous biodegradable matter, loose or soft fill, excavated pavement, construction debris, or refuse. Stones or rock fragments shall not exceed 40% by weight of the backfill material.
D. Unacceptable Materials: Materials that do not comply with the requirements for the acceptable material or which cannot be compacted to the specified or indicated density.

1.05 SUBMITTALS

A. Submit the following in accordance with Section 01300 - Submittals:

1. Submit an excavation, backfilling, and filling plan at least two weeks prior to start of any earth moving activities. The review will be only for the information of the CITY and third parties for an overall understanding of

the project relating to access, maintenance of existing facilities and proper utilization of the site. The Contractor shall remain responsible for the adequacy and safety of the means, methods and sequencing of construction. The plan shall include, but not be limited to the following items:

(a) Detailed sequence of work.
(b) General description of construction methods.
(c) Numbers, types, and sizes of equipment proposed to perform excavation and compaction.
(d) Details of dust control measures.
(e) Proposed locations of stockpiled excavation and/or backfill materials.
(f) Proposed surplus excavated material off-site disposal areas and required permits.
(g) Details of erosion and sedimentation control measures which will prevent erosion and sedimentation during the earth moving activities.

2. Laboratory testing results of gradation and moisture-density relationship. Submittal shall include specific location of the source and the date when sample was taken.
3. During Construction, submit written confirmation of fill lift thickness, in-place soil moisture content, and percentage of compaction to the Engineer before placing the next lift or constructing foundations.

1.06 QUALITY ASSURANCE AND CONTROL

A. Provide in accordance with Section 01400 and as specified.
B. The Contractor shall be solely responsible for making all excavations in a safe manner. All excavation, trenching, and related sheeting, bracing, etc. shall comply with the requirements of OSHA excavation safety standards (29 CFR Part 1926 Subpart P) and State requirements. Where conflict between OSHA and State regulations exists, the more stringent requirements shall apply.
C. Do not excavate, construct embankments, or fill until all the required submittals have been reviewed by the Engineer.
D. Formulate excavation, backfilling, and filling schedule and procedures to eliminate possibility of undermining or disturbing foundations of partially and completed structures, pipelines and embankments or existing structures and pipelines.
E. Field and Laboratory Testing and Inspections:

1. Field and laboratory testing shall be performed by an independent testing laboratory (the Testing Laboratory) selected by the City. The first round of tests will be paid from the “Cost Allowance for Permits, Licenses and Fees”.
2. The location of tests shall be mutually acceptable to Testing Laboratory and the Engineer, or as directed by the Engineer.
3. In the event compacted material does not meet specified in-place density, re-compact material and re-test this area until specified results are obtained. All costs shall be borne by the Contractor at no additional cost to the City.
4. The Testing Laboratory shall perform inspections at least once daily to confirm lift thickness and compaction effort for entire fill area.

F. Methods of Field Testing

1. In-Place Density: ASTM D1556, ASTM D2167, or ASTM D2922.
2. In-Place Moisture Content: ASTM D3017, ASTM D4944, or ASTM D4959.

G. Material Testing Frequency: The following testing frequencies are minimum required for all structural and non-structural fill, grading and embankment.

1. Field In-Place Density and Moisture Content - Screened gravel and crushed stone shall be compacted as specified and indicated. For other backfill and fill materials, minimum test frequency shall be as follows, and no less than one test per:

   (a) Trenches under structures, foundation preparation, or roadways subbase: Every 500’ lin. ft. [150 m.] per lift.
   (b) Trenches in areas without structures or roadways: Every 1000 lin. ft. [300 m.] per alternate lift.
   (c) Paved Roadways: Every 200 lin. ft. [60 m.] per lift.
   (d) Paved Areas: 3,500 sq. ft. [350 sq. m.] per lift.
   (e) Under each structure: 1,000 sq. ft. [100 sq. m.] per lift.
   (f) Around each structure: 1,500 sq. ft. [150 sq. m.] per lift.
   (g) Embankment Fills: 10,000 sq. ft. [1000 sq. m.] per lift.

2. Moisture Density - One per source, except for screened gravel and crushed stone. Repeat the moisture density test for every 5,000 cubic yard of material use, and whenever visual inspection indicates a change in material gradation as determined by the Engineer.

3. Gradation Analysis - A minimum of one per source and for each moisture density test and whenever visual inspection indicates a change in material gradation.

H. Construction Tolerances

1. Construct finished surfaces to plus or minus 1 inch [2.5 cm] of the elevations indicated.
2. Grade cut and fill areas to plus or minus 0.20 foot [6.0 cm] of the grades indicated.
3. Complete embankment edges to plus or minus 6 inches [15 cm] of the slope lines indicated.
4. Provide the Engineer with adequate survey information to verify compliance with above tolerances.

I. Cut pavement with a saw or pneumatic tools to prevent damage to remaining pavement without extra compensation. Where pavement is removed in large pieces, dispose of pieces before proceeding with excavation.

J. Pipes, drains, and other utilities may exist in certain locations not indicated on drawings. No attempt has been made to show all services. Completeness or accuracy of information given is not guaranteed. Contractor is to conform with all Sunshine One Call (811) requirements.

K. Dig test pits considered as incidental to the normal excavation as indicated and specified in this Section, at no additional compensation.

L. Carefully support and protect from damage, existing pipes, poles, wires, fences, curbings, property line markers, and other structures, which the Engineer determines must be preserved in place without being temporarily or permanently relocated. Should such items be damaged, restore without compensation therefore, to at least as good condition as that in which they were found immediately before the work was begun.

M. Whenever certain existing structures, as described below, are encountered, and the Engineer so directs, change the location, remove and later restore, or replace such structures, or assist the CITY in doing so.

N. In removing existing pipes or other structures, include for payment only those new materials which are necessary to replace those unavoidably damaged as determined by the Engineer.

O. The preceding two paragraphs apply to pipes, wires, and other structures which meet the following: (a) are not indicated on the drawings or otherwise provided for, (b) encroach upon or are encountered near and substantially parallel to the edge of the excavation, and (c) in the opinion of the Engineer, will impede progress to such an extent that satisfactory construction cannot

proceed until they have been changed in location, removed (to be later restored), or replaced.

P. Restore existing property or structures as promptly as practicable.

Q. If material unacceptable for foundation (in the opinion of the Engineer) is found at or below the grade to which excavation would normally be carried in accordance with the drawings and/or specifications, remove such material to the required width and depth as directed by the Engineer and replace it with screened gravel, select borrow, or concrete.

R. Do not remove excavation materials from the site of the work or dispose of except as directed or permitted by the Engineer.

S. Haul away and dispose of surplus excavated materials at locations directed by the Engineer at no additional cost to the CITY.

T. During progress of work, conduct earth moving operations and maintain work site so as to minimize the creation and dispersion of dust. Furnish and spread calcium chloride if the Engineer decides that it is necessary for more effective dust control.

U. Provide suitable and safe bridges and other crossings where required for accommodation of travel, and to provide access to private property during construction, and remove said structures thereafter.

1.07 SITE CONDITIONS:

A. Subsurface Conditions: Refer to Front End documents.

Part 2 - PRODUCTS

2.01 GENERAL

A. Use only acceptable materials from excavations or borrows.

B. Provide 3,000 psi concrete.

C. Provide Fine Aggregate conforming to ASTM C33.

2.02 EQUIPMENT

A. The compaction equipment shall be selected by the Contractor, and shall be capable of consistently achieving the specified compaction requirements. The selected compaction equipment shall meet the following minimum requirements:

1. Manually operated vibratory plate compactors weighing no less than 200 pounds [90 kg] with vibration frequency no less than 1600 cycles per minute.
2. Vibratory steel drum or rubber tire roller weighing at least 12,000 pounds [5450 kg].

Part 3 - EXECUTION

3.01 SITE MAINTENANCE

A. Roadway and Site Leveling: Grade roadway and site as to maintain them in a level unrutted condition and to eliminate puddling of surface and subsurface water.

3.02 EXCAVATION

A. Execution of any earth excavation shall not commence until the related excavation support systems, and backfill and fill materials submittals are reviewed by the Engineer and all Engineer's comments satisfactorily addressed.
B. Carry out program of excavation, and excavation support systems to eliminate possibility of undermining or disturbing foundations of existing structures or of work previously completed under this contract.
C. Excavate to widths that give suitable room for building structures or laying and jointing piping.
D. Do not plow, scrape or dig by machinery near to finished subgrade in a manner that would result in disturbance of subgrade.
E. Excavate to lines and grades indicated in an orderly and continuous program.
F. Establish limits of excavation to allow adequate working space for installing forms and for safety of personnel.
G. Excavate to elevations indicated, or deeper, as directed by the Engineer, to remove unacceptable material.
H. Exercise care to preserve material below and beyond the lines of excavations.

I. Place excavated material at the approved stockpile locations and in no case closer than 3 feet [90 cm] from edge of excavations to prevent cave-ins of bank slides.
J. Regard small, less than one cubic yard, boulders, rock fragments, and concrete encountered during excavation as a normal part of in-place soils and not included for payment as rock.

3.03 SEPARATION OF EXCAVATED MATERIALS FOR REUSE

A. Remove only existing pavement that is necessary for prosecution of work.
B. Carefully remove loam and topsoil from excavated areas. Store separately for further use or furnish equivalent loam and topsoil as directed.
C. Carefully remove acceptable material from excavated areas and store separately for further use as backfill material.

3.04 TRENCH EXCAVATION

A. When pipe is to be laid in gravel bedding or concrete cradle, excavate trench by machinery to, or just below designated subgrade. If material remaining at bottom of trench is disturbed, recompaction shall be required.
B. When pipe is to be laid directly on bottom of trench, do not excavate lower part of trenches by machinery to subgrade. Remove remainder of material to be excavated just before placing of pipe by use of hand tools. Form a flat or shaped bottom, true to grade, so pipe will have a uniform and continuous bearing. Support on firm and undisturbed material between joints, except for limited areas where use of pipe slings have disturbed bottom.
C. Depth and width of trench are to conform with OSHA and Florida Trench Safety Act requirements, whichever are more stringent.

3.05 TRENCH EXCAVATION IN FILL

A. Place and compact material to top of fill or to a minimum height of 1 ft. [30 cm] above top of pipe, whichever is less, when pipe is to be laid in embankment or other recently filled material. Take particular care to ensure maximum consolidation of material under pipe location. Excavate pipe trench as though in undisturbed material.

3.06 EXCAVATION NEAR EXISTING STRUCTURES

A. Discontinue digging by machinery when excavation approaches pipes, conduits, or other underground structures. Continue excavation by use of

hand tools. Include such manual excavation in work to be done when incidental to normal excavation and under items involving normal excavation.

B. Excavate test pits when determination of exact location of pipe or other underground structure is necessary for doing work properly.

3.07 REMOVAL OF SUBSURFACE OBSTRUCTIONS

A. Remove indicated subsurface structures and related obstructions to extent shown
B. Promptly notify the Engineer when any unexpected subsurface facilities are encountered during excavation such as utility lines and appurtenances, walls and foundations.

3.08 UNAUTHORIZED EXCAVATION

A. When the bottom of any excavation for structures is taken out beyond limits indicated or specified, backfill, with screened gravel and crushed stone wrapped with non-woven geotextile fabric or with 1,500 psi (10 Mpa) concrete.

3.09 REUSE AND DISPOSAL OF SURPLUS EXCAVATED MATERIALS

A. Reuse surplus acceptable excavated materials for backfill; deposit neatly and grade so as to make or widen fills, flatten side slopes, or fill depressions; or legally dispose off-site; all as directed or permitted and without additional compensation.

3.10 SUBGRADE PREPARATION AND PROTECTION

A. Remove loam and topsoil, loose vegetable matter, stumps and large roots from areas upon which embankments will be built or material will be placed for grading. Shape subgrade as indicated on drawings, and prepare by forking, furrowing, or plowing so that the first layer of new material placed thereon will be well bonded to it.
B. As directed by the Engineer, over excavate unacceptable materials below the foundation subgrade. Backfill the over excavation with compacted screened gravel or crushed stone wrapped with nonwoven geotextile fabric. In no case shall the screened gravel be placed directly on the exposed subgrade prior to placing the geotextile fabric.
C. Proof roll the foundation subgrade prior to backfilling and filling operation, or placing foundation concrete.
D. Proof roll the pipe trench foundation subgrade prior to backfilling and filling operation, or placing soil-supported pipeline.

E. Utilize excavating equipment equipped with a toothless or smooth edged, excavating bucket to expose the pipe trench foundation subgrade to avoid disturbance of the bearing surface. Tamp the exposed subgrade with the excavating bucket prior to backfilling and filling operation, or placing soil-supported pipeline.

3.11 CARE AND RESTORATION OF PROPERTY

A. Enclose uncut tree trunks adjacent to work in wooden boxes of such height as may be necessary for protection from injury from piled material, equipment, operations, or otherwise due to work. Operate excavating machinery and cranes of suitable type with care to prevent injury to trees not to be cut and particularly to overhanging branches and limbs.
B. Cut all branches, limbs, and roots smoothly and neatly without splitting or crushing. Neatly trim, cut the injured portions and cover with an application of grafting wax or tree healing paint as directed.
C. Protect cultivated hedges, shrubs, and plants which might be injured by the Contractor's operations by suitable means or dig up and temporarily replant and maintain. After construction operations have been substantially completed, replant in original positions and care for until growth is re-established. If cultivated hedges, shrubs, and plants are injured to such a degree as to effect their growth or diminish in their beauty or usefulness, replace by items of equal kind and quality existing at the start of the work.
D. Do not use or operate tractors, bulldozers, or other power-operated equipment on paved surfaces when their treads or wheels of which are so shaped as to cut or otherwise damage such surfaces.
E. Restore surfaces damaged by the Contractor's operations to a condition at least equal to that in which they were found immediately before work commenced. Use suitable materials and methods for such restoration.

3.12 BACKFILLING - GENERAL

A. Do not place, spread, roll or compact fill material during unfavorable weather conditions. If interrupted by heavy rain or other unfavorable conditions, do not resume until ascertaining that the moisture content and density of the previously placed soil are as specified.
B. Do not use puddling, ponding or flooding as a means of compaction.

3.13 MATERIAL PLACEMENT AND COMPACTION REQUIREMENTS

A. Select Borrow, and Fine Aggregate

1. Dump and spread in layers not to exceed 8-in. [20 cm] uncompacted thickness.
2. Compacted fill and backfill under structures and used for pipe bedding (from below pipe to spring line) shall be as indicated but not less than 95%. Other areas to be compacted to not less than 90% unless otherwise indicated.

B. Screened Gravel and Crushed Stone

1. Dump and spread in layers not to exceed 8-in. [20 cm] uncompacted thickness.
2. Compact using self-propelled vibratory steel drum or rubber tire rollers with a minimum of 4 passes in directions perpendicular to one another in open areas. In small areas, use manually operated vibratory plate compactors with a minimum of 4 passes.

C. Bank-run Gravel and Acceptable materials for use as non-structural fill

1. Dump and spread in layers not to exceed 12-in. [30 cm] uncompacted thickness.
2. Compact to not less than 90% unless otherwise indicated.

D. Backfilling and filling operation shall be suspended in areas where tests are being made until tests are completed and the Testing Laboratory has advised the Engineer that adequate densities are obtained.

3.14 STRUCTURAL FILL AND BACKFILL UNDER STRUCTURES

A. Compact fill and backfill under structures and pavements with screened gravel, crushed stone, select borrow, or fine aggregate as specified and indicated.

3.15 NON-STRUCTURAL BACKFILL AROUND STRUCTURES

A. Use acceptable materials for non-structural backfill around structures and compacted as specified and indicated.
B. Conduct hydraulic testing as soon as practicable after structures are constructed and other necessary work has been done. Start backfilling promptly after completion of tests.
C. Deposit material evenly around structure to avoid unequal soil pressure.
D. Do not place backfill against or on structures until they have attained sufficient strength to support the loads (including construction loads) to which they will be subjected, without distortion, cracking, or other damage.

3.16 BACKFILLING PIPE TRENCHES

A. General

1. Begin backfilling and proceed until completed after: the pipes and conduits have been laid, joints have acquired maximum degree of hardness, pipelines and conduits have successfully passed tests and inspections as required in the Specifications, and concrete or masonry structures within the trench have reached their design strength to support all loads.
2. Backfill and compact indicated material under, around, and above pipes, conduits, and other structures to the indicated or specified compaction density requirement. Utilize compaction devices which will not damage the pipe, conduit, or structure within the trench.
3. Do not drop backfill material into trench from a height of more than 5 ft. [150 cm], or in a manner which will damage the pipe, conduit, or other structure within trench.

B. Pipe Trenches

1. Materials

(a) From below pipe to 1 ft. [30 cm] above top of pipe: Use screened gravel or crushed stone if the pipe is below the ground water table, or clean sand if above the water table, unless otherwise indicated.
(b) One foot [30 cm] above top of pipe to finished grade or to pavement subbase: Use clean well graded fill or acceptable materials, unless otherwise indicated.

2. Compacting Around Pipes: Compact material around circumference of pipe and the area between the trench wall and the pipe by hand tamping in 6 inches [15 cm] layers.
3. Compacting Above Pipe: Compact material by hand tamping. If trench width is wide enough to accommodate power tools and the compacted material over the pipe will support the load of the power tools without damage to the pipe, use rollers or other powered compaction equipment able to more readily achieve compaction requirements.

3.17 MATERIAL FOR FILLING AND EMBANKMENTS

A. Use acceptable materials for filling and building embankments unless otherwise indicated.

3.18 PLACING AND COMPACTING EMBANKMENT MATERIAL

A. Compact fill material as specified and indicated.
B. Perform fill operation in an orderly and systematic manner using equipment in proper sequence to meet the specified compaction requirements.
C. Place fill on surfaces which are free of unacceptable materials.
D. Begin filling in lowest section of work area. Grade surface of fill approximately horizontal but provide with sufficient longitudinal and transverse slope to allow for runoff of surface water from every point.
E. Conduct filling so that no obstruction to drainage from other sections of fill area is created at any time.
F. Reduce moisture content of fill material, if necessary, in source area by working it over under warm and dry atmospheric conditions. A large disc harrow with two to three foot diameter disks may be required for working soil in a drying operation.
G. Compact uniformly throughout. Keep surfaces of fill reasonably smooth and free from humps and hollows which would prevent proper and uniform compaction. Do not permit hauling equipment to follow a single track on the same layer but direct equipment to spread out to prevent overcompaction in localized areas. Take care in obtaining thorough compaction at edges of fill.
H. Slightly slope surface of fill to ensure drainage during periods of wet weather. Do not place fill while rain is falling or after a rain-storm until the Engineer considers conditions satisfactory. During such periods and upon suspension of filling operations for any period in excess of 12 hours, roll smooth the surface of fill using a smooth wheel static roller to prevent excessive absorption of rainfall and surface moisture. Prior to resuming compaction operations, remove muddy material off surface to expose firm, compacted material, as determined by the Engineer.
I. When fill is placed against an earlier fill or against in-situ material under and around structures, including around piping beneath structures or embankments, slope junction between two sections of fill, 1 vertical to 1.5 horizontal. Bench edge of existing fill 24-in. [60 cm] to form a serrated edge of compact stable material against which to place the new fill. Ensure that rolling extends over junction between fills.
J. When fill is placed directly upon another older fill, clean surface thoroughly of debris and remove any loose material. Then proof roll the entire old surface.
K. After spreading each loose lift to the required thickness and adjusting its moisture content as necessary, roll with sufficient number of passes to obtain the required compaction. One pass is defined as the required number of successive trips which by means of sufficient overlap will insure complete

coverage and uniform compaction of an entire lift. Do not make additional passes until previous pass has been completed.

L. In case material of any fill sinks and weaves under roller or under hauling units and other equipment, required degree of compaction is not being obtained. Reduce the moisture content. If such sinking and weaving produces surface cracks, suspend operations on that part of the embankment until it becomes sufficiently stabilized. Ideal condition in fill is that attained when the entire fill below the surface being rolled is so firm and hard as to show only the slightest weaving and deflection as roller passes. Spread out rolling operations over the maximum practicable area to minimize condition of sinking and weaving.

M. If because of defective workmanship, compaction obtained over any area is less than that required, remedy condition at no cost to CITY. If additional rolling or other means fail to produce satisfactory results, remove material in that area down to a level of satisfactory density. Perform removal, replacement, and rerolling without additional compensation

3.19 COMPACTION CONTROL OF BACKFILL, FILL, AND EMBANKMENT

A. Compact to density specified and indicated for various types of material. Control moisture content of material being placed as specified or if not specified, at a level slightly lower than optimum.

B. The Testing Laboratory shall provide inspection during filling or backfilling operations to ensure compaction of screened gravel or crushed stone and record compaction equipment in use.

C. Moisture control may be required either at the stockpile area, pits, or on embankment or backfill. Increase moisture content when material is too dry by sprinkling or other means of wetting uniformly. Reduce moisture content when material is too wet by using ditches, pumps, drainage wells, or other devices and by exposing the greatest possible area to sun and air in conjunction with harrowing, plowing, spreading of material or any other effective methods.

3.20 ALLOWANCE FOR SHRINKAGE

A. Build embankments or backfill to a height above finished grade which will, in the opinion of the Engineer, allow for the shrinkage or consolidation of material. Initially, provide at all points, an excess of at least 1% of total height of backfill measured from stripped surface to top of finished surface.

B. Supply specified materials and build up low places as directed, without additional cost if embankment or backfilling settles so as to be below the indicated level for proposed finished surface at any time before final acceptance of the work.

3.21 CONTRACT CLOSEOUT

A. Provide in accordance with Section 01700.

- END OF SECTION -

SECTION 02220

EXCAVATION, BACKFILL AND COMPACTION

Part 1 - GENERAL

1.01 WORK INCLUDED

A. The work included under this section consists of excavating, grading, backfilling and compacting for general construction.

B. For Excavation and Backfill for Utilities refer to Section 02222.

C. For Excavation and Backfill for Structures refer to Section 02224.

D. Excavation shall include the removal of all material of whatever nature encountered, including all obstructions of any nature that would interfere with the proper execution and completion of the work. The removal of said material shall conform to the lines and grades indicated.

i) When excavations are to be made in paved surfaces, the pavement shall be saw-cut ahead of the excavation by means of suitable sharp tools to provide a uniform sharp edge, with minimum disturbance of remaining material.

1.02 PROTECTION

A. Excavations

1. Notify ENGINEER of unexpected subsurface conditions and discontinue work in affected area until notification to resume work.
2. Provide and maintain adequate barricades and warning lights to protect open trenches.
3. All trenches shall be fully backfilled at the end of each day.

B. Existing Utilities

1. Those existing utilities that are to be retained shall be protected, and if damaged, shall be repaired by the CONTRACTOR at no additional cost to the CITY.
2. The CONTRACTOR shall notify CALL SUNSHINE at their toll free number 1-800-432-4770 and/or each utility individually, forty-eight (48) hours prior to any excavation.

C. Contractor shall exercise care during excavation in areas of environmental sensitivity and advise the project engineer if any hazardous material is encountered.

Part 2 - PRODUCTS

2.01 MATERIAL

A. Material shall comply with Section 125-8 of the FDOT specifications for Road and Bridge Construction, the drawings and other contract documents.

B. Material used for backfill shall be select granular material, free from grass, roots, brush or other vegetation, rubbish, clay, marl, lumps of broken paving or boulders having maximum dimension larger than six (6") inches. Unsuitable material shall be removed from the site at the CONTRACTOR'S expense away from the project.

C. Material coming within one foot (1'-0") of any structure or pipe shall be free of rocks or unbroken masses of earthy material having maximum dimension larger than two inches (2").

D. If, in the ENGINEER'S opinion, material is unsuitable for backfill purposes, imported material having sand equivalent value of no less than twenty percent (20%) shall be used for this portion of the trench backfill. Imported sand backfill, when ordered by the ENGINEER, will be paid for under a separate unit bid item if such bid item has been established, otherwise payment will be made in accordance with a negotiated price.

E. Suitable For Fills: Material classified as A-1, A-3, or A-2-4 under AASHTO M 145, free from vegetation and organic material, and with not more than 10 percent by weight passing the No. 200 sieve.

F. Unsuitable For Fills: Materials classified as A-2-5, A-2-6, A-2-7, A-4, A-5, A-6, A-7 and A-8 under AASHTO M 145.

G. Select Material: Suitable material containing no pieces or rock fragments larger than will pass a 3-inch diameter ring.

Part 3 - EXECUTION

3.01 EXCAVATION

A. Work shall comply with Section 120 of the FDOT Standard Specifications for Road and Bridge Construction.

B. Trench and Excavation:

1. Work shall comply with Section 125 of the 1991 FDOT Standard Specifications for Road and Bridge Construction.
2. The maximum amount of open trench permitted in any one (1) location shall be one hundred feet (100'), unless the trench is located within a State of County right-of-way, in which case the requirement would defer to the more stringent of those agencies.
3. All trenches shall be fully backfilled at the end of each day or, in lieu thereof, when approved by the ENGINEER, heavy steel plate adequately braced and capable of supporting vehicular traffic may be used in certain locations where it is impractical to backfill at the end of each day.

C. Over-excavation When Ordered:

1. Trenches shall be over-excavated beyond the depth shown, when ordered by the ENGINEER. Such over-excavation shall be to the depth ordered.
2. The trench shall be refilled to the grade of the bottom of the pipe with either selected granular material obtained from the excavation, sand or crushed rock, at the option of the ENGINEER. When crushed rock bedding is ordered, the material shall be a well-graded material with maximum particle size of three-quarters of an inch (3/4").
3. Bedding material shall be placed in layers, brought to optimum moisture content, and compacted to ninety-five percent (95%) of maximum density.
4. Payment for over-excavation shall be paid for either on a negotiated price basis, or as the ENGINEER may determine in accordance with Section 10.4 of the General Conditions.

D. Over Excavation not Ordered, Specified or Shown:

1. Any over-excavation carried below the grade ordered, specified or shown, shall be refilled to the required grade with suitable selected granular material.
2. Refilled material shall be moistened as required and compacted to ninety-five percent (95%) of maximum density.
3. Work required due to over excavation when not ordered shall be performed by the CONTRACTOR at his own expense.

E. Disposal of Excess Excavated Material:

1. The CONTRACTOR shall remove and dispose of all excess excavated material at his own expense, in accordance with Paragraph 7.14 C of the General Conditions.
2. All excess suitable material that cannot be used as fill on the site(s), is to remain property of the CITY and shall be removed by the CONTRACTOR to a disposal site(s) as directed by ENGINEER.
3. All materials suitable for use as backfill shall be hauled to and used in areas where not enough suitable material is available from the excavation.
4. Unsuitable material such as trees, shrubs, etc. shall be the CONTRACTORS responsibility to load, haul and provide a disposal site.

3.02 BACKFILLING

A. Work shall comply with Section 125-8 of the FDOT Specifications for Road and Bridge Construction, the drawings and all other contract documents.

B. Backfill shall not be dropped directly upon any structure or pipe.

C. Backfill shall not be placed around or upon any structure until the concrete has attained sufficient strength to withstand the loads imposed.

D. Backfill around and beneath structures, and beneath paved areas:

1. Except where otherwise specified for a particular structure or ordered by the ENGINEER, backfill placed around and beneath structures, and beneath paved areas, shall be placed in horizontal layers not to exceed eight inches (8") in thickness, as measured before compaction.
2. The backfill shall be brought up evenly with each layer moistened and compacted by mechanical means to ninety-five percent (95%) of maximum density.

3.03 COMPACTION TESTING

A. Compaction testing specified herein are expressed as a percentage of maximum density. Maximum density shall be determined by AASHTO T-180, Method D.

B. The CITY shall retain the services of an independent materials testing laboratory to perform laboratory and field density tests which, in the opinion of the ENGINEER, are necessary to establish compliance with the compaction

requirements of these specifications. The first round of tests will be paid from the “Testing Allowance”.

C. The costs of subsequent recompaction and retesting due to not achieving the required minimum compaction shall be borne by the CONTRACTOR at no additional cost to the CITY.

D. Compaction density tests shall be scheduled by the ENGINEER. CONTRACTOR shall give notice to the ENGINEER 24 hours in advance of required density tests.

E. All tests which fail to meet minimum compaction requirements shall be paid by the CONTRACTOR. All tests shall be performed in the presence of the ENGINEER or his representative.

F. Trench backfill which does not comply with the specified densities, as indicated by such tests, shall be reworked and recompacted until the required compaction is secured, at no additional cost to the CITY.

- END OF SECTION –

SECTION 02222

EXCAVATION AND BACKFILL FOR UTILITIES

Part 1 - GENERAL

1.01 THE REQUIREMENT

A. Excavate, grade and backfill as required for underground piping systems and appurtenances as shown on the Drawings and specified herein.

1.02 RELATED WORK SPECIFIED ELSEWHERE

A. Section 02500 - Surface Restoration
B. Division 3 - Concrete

1.03 REFERENCE SPECIFICATIONS, CODES, AND STANDARDS

A. Codes: All codes, as referenced herein, are specified in Section 01090, "Reference Standards".
B. Commercial Standards:

ASTM C33	Standard Specification for Concrete Aggregates
ASTM D 422	Method for Particle-Size Analysis of Soils.
ASTM D 698	Test Methods for Moisture-Density Relations of Soils and Soil-Aggregate Mixtures, Using 5.5-lb (2.49-kg) Rammer and 12-in (304.8-mm) Drop.
ASTM D 1556	Test Method for Density of Soil in Place by the Sand-Cone Method.
ASTM D 1557	Test Methods for Moisture-Density Relations of Soils and Soil-Aggregate Mixtures Using 10-lb (4.54-kg) Rammer and 18-in (457-mm) Drop.
ASTM D 2419	Test Method for Sand Equivalent Value of Soils and Fine Aggregate.
ASTM D 2922	Test Methods for Density of Soil and Soil-Aggregate in Place by Nuclear Methods (Shallow Depth).

1.04 SUBMITTALS

A. General: Submit information and samples to the ENGINEER for review as specified herein in accordance with Section 01300, "Submittals".

B. Dewatering: The CONTRACTOR shall submit to the ENGINEER its proposed methods of handling trench water and the locations at which the water will be disposed of. Methods shall be acceptable to the ENGINEER before starting the excavation.
C. Bedding and Backfill Materials: The CONTRACTOR shall notify the ENGINEER of the off-site sources of bedding and backfill materials, and submit to the ENGINEER a representative sample weighing approximately 50 lbs. The sample shall be delivered to a location on site determined by the ENGINEER.
D. Sheeting System: Drawings of the sheeting system and design computations shall be submitted to the ENGINEER; however, the review of these drawings shall in no way relieve the CONTRACTOR of the responsibility to provide a safe and satisfactory sheeting and shoring system. Sheeting and shoring shall be designed by the CONTRACTOR, and the proposed design shall be sealed by a Professional ENGINEER registered in the State of Florida. If the ENGINEER is of the opinion that at any point sufficient or proper supports have not been provided, it may order additional supports put in at the CONTRACTOR’s expense.
E. Dewatering Permits: If the quantity or nature of water withdrawn requires approval/permits from regulatory agencies, the CONTRACTOR shall procure such permits at its expense and submit copies to the ENGINEER before commencing the work. The CONTRACTOR will not be granted contract time extensions due to dewatering permit processing delays.

1.05 QUALITY CONTROL

A. An independent testing laboratory (Testing Laboratory) will be selected by the CITY to perform field and laboratory soil testing as described in Section 01400, "Testing and Inspection". The cost of the first round of tests will be paid from the “Test Allowance”. The costs of subsequent recompaction and retesting resulting from not achieving the required minimum compaction shall be borne by the CONTRACTOR at no additional cost to the CITY.
B. The CONTRACTOR shall schedule its work so as to permit a reasonable time for testing before placing succeeding lifts and shall keep the Testing Laboratory informed of his progress. A minimum of 48 hours of notice shall be provided to the Testing Laboratory to mobilize its activities.

1.06 SUBSURFACE INFORMATION

A. The CONTRACTOR shall be responsible for anticipating groundwater conditions and shall provide positive control measures as required. Such

measures shall ensure stability of excavations, groundwater pressure control, prevention of tanks, pipes, and other structures from being lifted by hydrostatic pressures, and avoiding the disturbance of subgrade bearing materials.

1.07 TRENCH SAFETY ACT COMPLIANCE

A. The CONTRACTOR by signing and executing the contract is, in writing, assuring that it will perform any trench excavation in accordance with the Florida Trench Safety Act, Section 553.60 et. seq.. The CONTRACTOR has further identified the separate item(s) of cost of compliance with the applicable trench safety standards as well as the method of compliance as noted in the "Bid Forms" Section of the Contract front-end documents.
B. The CONTRACTOR acknowledges that this cost is included in the applicable items of the Proposal and Contract and in the Grand Total Bid and Contract Price.
C. The CONTRACTOR is, and the CITY and ENGINEER are not, responsible to review or assess the CONTRACTOR’s safety precautions, programs or costs, or the means, methods, techniques or technique adequacy, reasonableness of cost, sequences or procedures of any safety precaution, program or cost, including but not limited to, compliance with any and all requirements of Florida Statute Section 553.60 et. seq. cited as the "Trench Safety Act". The CONTRACTOR is, and the CITY and ENGINEER are not, responsible to determine if any safety or safety related standards apply to the project, including but not limited to, the "Trench Safety Act".

1.08 PROTECTION OF PROPERTY AND STRUCTURES

A. The CONTRACTOR shall, at its own expense, sustain in place and protect from direct or indirect injury, all pipes, poles, conduits, walls, buildings, and all other structures, utilities, and property in the vicinity of its Work. Such sustaining shall be done by the CONTRACTOR. The CONTRACTOR shall take all risks attending the presence or proximity of pipes, poles, conduits, walls, buildings, and all other structures, utilities, and its Work. It shall be responsible for all damage, and assume all expenses, for direct or indirect injury and damage, caused by its Work, to any such pipe, structures, etc., or to any person or property, by reason of injury to them, whether or not such structures, etc., are shown on the Drawings.
B. Barriers shall be placed at each end of all excavations and at such places as may be necessary along excavations to warn all pedestrian and vehicular traffic of such excavations. Barricades with flashing lights shall also be placed along excavation from sunset each day to sunrise of the next day until such

excavation is entirely refilled, compacted, and paved. All excavations shall be barricaded where required to meet OSHA, local and Federal Code requirements, in such a manner to prevent persons from falling or walking into any excavation within the site fenced property limits.

1.09 DEWATERING PERMITS

A. The CONTRACTOR shall be responsible for obtaining all permits required for the dewatering operation.

Part 2 - PRODUCTS

2.01 BEDDING MATERIAL

A. Bedding materials shall be furnished from acceptable off-site sources. The CONTRACTOR shall submit to the ENGINEER the sources of each material for review in accordance with Section 01300, "Submittals".
B. Crushed stone (or drainfield limerock) shall be used as bedding material for piping (except for copper pipe) and/or manholes as shown on the Standard Details when the installation is below the ground water table elevation. Crushed stone shall consist of hard, durable, sub-angular particles of proper size and gradation, and shall be free from organic material, wood, trash, sand, loam, clay, excess fines, and other deleterious materials.

1. For pipe diameters less than 24 inches, the stone shall conform to the requirements of ASTM C 33, Size No. 57 (3/4-inch rock) and be graded within the following limits:

Sieve Size	Percent Finer by Weight
1-½ inch	100
1 inch	95 - 100
½ inch	25 - 60
No. 4	0 - 10
No. 8	0 – 5

2. For bedding of 24 inch and larger diameter pipe, the stone shall conform to the requirements of ASTM C 33 and be graded within the following limits:

Sieve Size	Percent Finer by Weight
5/8 inch	100
1/2 inch	40 – 100
3/8 inch	15 - 45
No. 10	0 – 5

C. Sand shall be used for bedding pipe when installed under dry trench conditions, or above the ground water table. Sand shall also be used for bedding copper pipe under all conditions. Sand shall be dry, screened, graded sand with 100 percent passing a 3/8-inch sieve and not more than 5 percent passing a No. 200 sieve.
D. Limerock screenings, sand or other fine material shall not be used for bedding.
E. All pipe bedding material shall be new, unless otherwise approved by the Engineer. Existing pipe bedding material may not be used.

2.02 SELECT BACKFILL

A. Select Backfill: Select backfill shall be clean sandy material passing through a 3/4-inch sieve as select backfill material.

2.03 GENERAL BACKFILL

A. All other backfill (general backfill) placed above the select backfill shall pass through a 6-inch ring. General backfill shall contain no more than 10 percent organics. General backfill used under roadways shall be compatible with the materials and compaction specified under Section 02510 – Asphaltic Concrete Pavement and 02526 – Concrete Pavement, Curbs and Sidewalk.

Part 3 - EXECUTION

3.01 EXCAVATION

A. The CONTRACTOR shall perform all excavation of every description and of whatever substance encountered, to the dimensions, grades and depths shown on the Drawings, or as required for a proper installation. All excavations shall be made by open cut and in accordance with the Trench Safety Act. All existing utilities such as pipes, poles and structures shall be carefully located, supported and protected from injury; in case of damage, they shall be restored at the CONTRACTOR’s expense.
B. Pipe trenches for piping shall be excavated to a width within the limits of the top of the pipe and the trench bottom so as to provide a clearance on each side of the pipe barrel, measured to the face of the excavation, or sheeting if used, of 6 inches to 12 inches as defined on the Drawings. All pipe trenches shall be excavated to a level where suitable material is reached, a minimum of 8 inches below the pipe barrel or that will allow for a minimum of 36 inches of covering unless otherwise indicated on the Drawings.

C. Ladders or steps shall be provided for and used by workmen to enter and leave trenches.
D. Excavated unsuitable material shall be removed from the site and disposed of by the CONTRACTOR. Materials removed from the trenches shall be stored and in such a manner that will not interfere unduly with traffic on public roadways and sidewalks and shall not be placed on private property. In congested areas, such materials that cannot be stored adjacent to the trench or used immediately as backfill shall be removed to other convenient places of storage acceptable to the CITY at the CONTRACTOR's expense.
E. Excavated material that is suitable for use as backfill shall be used in areas where sufficient material is not available from the excavation. Suitable material in excess of backfill requirements shall be disposed off-site at the CONTRACTOR's expense.

3.02 SHEETING AND BRACING

A. The CONTRACTOR shall furnish, place and maintain sheeting and bracing to support sides of the excavation as necessary to provide safe working conditions in accordance with OSHA requirements, and to protect pipes, structures and other Work from possible damage. Where wood sheeting or certain designs of steel sheeting are used, the sheeting shall be cut off at a level of 2 feet above the top of the installed pipe and that portion below the level shall be left in place. If interlocking steel sheeting is used, it may be removed providing removal can be accomplished without disturbing the bedding, pipe or alignment of the pipe. Any damage to the pipe bedding, pipe or alignment of the constructed utility caused by the removal of sheeting shall be cause for rejection of the affected portion of the work. The CITY may permit sheeting to be left in place at the request and expense of the CONTRACTOR, or the CITY may order him in writing to leave in place, for the preventing of damage to structures or property. Payment for sheeting ordered to remain in place shall be paid for at a negotiated price.
B. If the ENGINEER is of the opinion that at any point sufficient or proper supports, have not be provided, he may order additional supports put in at the CONTRACTOR's expense. The CONTRACTOR shall be responsible for the adequacy of all sheeting used and for all damage resulting from sheeting and bracing failure or from placing, maintaining and removing it.

3.03 REMOVAL OF WATER

A. General: It is a basic requirement of these Specifications unless otherwise authorized per Article 3.09 that excavations shall be free from water before pipe or structures are installed.
B. The CONTRACTOR shall provide pumps, and other appurtenant equipment necessary to remove and maintain water at such a level as to permit construction in a dry condition. The CONTRACTOR shall continue dewatering operations until backfilling has progressed to a sufficient depth over the pipe to prevent flotation or movement of the pipe in the trench or so that it is above the water table. If at any point during the dewatering operation it is determined that fine material is being removed from the excavation sidewalls, the dewatering operation shall be stopped. If any of the subgrade or underlying material is disturbed by movement of groundwater, surface water, or any other reason, it shall be replaced at the CONTRACTOR's expense with crushed stone or gravel.
C. The CONTRACTOR shall use dewatering systems that include automatic starting devices, and standby pumps that will ensure continuous dewatering in the event of an outage of one or more pumps.
D. Disposal: Water from the trenches and excavation shall be disposed of in such a manner as will not cause injury to public health, to public or private property, to the Work completed or in progress, to the surface of the streets, cause any interference with the use of the same by the public, or cause pollution of any waterway or stream. The CONTRACTOR shall submit his proposed methods of handling trench water and locations at which the water will be disposed of to the ENGINEER for review and shall receive acceptance before starting the excavation. Disposal to any surface water body will require silt screens to prevent any degration in the water body. The CONTRACTOR shall have responsibility for acquiring all necessary permits for disposal.

3.04 TRENCH STABILIZATION

A. No claim for extras, or additional payment will be considered for cost incurred in the stabilization of trench bottoms which are rendered soft or unstable as a result of construction methods, such as improper or inadequate sheeting, dewatering or other causes. In no event shall pipe be installed when such conditions exist and the CONTRACTOR shall correct such conditions so as to provide proper bedding or foundations for the proposed installation at no additional cost to the CITY before placing the pipe or structures.

3.05 PIPE BEDDING IN DRY TRENCHES

A. Pipe trenches shall be excavated as described in Article 3.01. The resulting excavation shall be backfilled with acceptable pipe bedding material, up to the level of the centerline of the proposed pipe barrel. This backfill shall be tamped and compacted to provide a proper bedding for the pipe and shall then be shaped to receive the pipe. Bedding shall be provided under the branch of all fittings to furnish adequate support and bearing under the fitting.
B. Any over excavation below the levels required for installation of the pipe shall be backfilled with acceptable bedding material, tamped, compacted and shaped to provide proper support for the proposed pipe, at the CONTRACTOR's expense.

3.06 BACKFILL

A. The CONTRACTOR shall not backfill trenches until the piping has been inspected and tested in accordance with Section 15995 - Pipeline Testing and Disinfection.
B. Pipelines: Pipeline trenches shall be backfilled to a level 12 inches above the top of the pipe with select backfill. When placed in the dry, such material shall be placed in 9-inch layers, each compacted to the densities specified in Article 3.07. Only hand operated mechanical compacting equipment shall be used within six inches of the installed pipe.
C. After the select backfill has been placed as specified above, and after all excess water has completely drained from the trench, general backfilling of the remainder of the trench may proceed. General backfill shall be placed in horizontal layers, the depth of which shall not exceed the ability of the compaction equipment employed, and in no event shall exceed a depth of 12 inches. Each layer shall be moistened, tamped, puddled, rolled or compacted to the densities specified in Article 3.07.
D. Manholes and Vaults: Any excavation below the levels required for the proper construction of manholes or vaults shall be filled with Class B concrete. The use of earth, rock, sand or other materials for this purpose will not be permitted.

3.07 COMPACTION AND DENSITIES

A. Compaction of backfill shall be 98% of the maximum density where the trench is located under structures or paved areas, and 95% of the maximum density elsewhere. Methods of control and testing of backfill construction are:

    1. Maximum density of the material in trenches shall be determined by ASTM D 1557.

2. Field density of the backfill material in place shall be determined by ASTM D 1556 or D 2922.

B. Density Test Locations for Pipelines: The compacted backfill/fill shall be tested for in-place density at the rate of one test location per 200 lineal feet (or fraction thereof) of trench, or as shown on the Drawings or as directed by the ENGINEER. The density tests shall be taken at the trench bottom and at each location in one foot intervals beginning from the top of the piping and ending at the final grade. At existing road or pavement crossings, a minimum of two (2) density tests per crossing per lift is required.

C. Trench backfill which does not comply with the specified densities, as indicated by such tests, shall be reworked and recompacted until the required compaction is secured, at no additional cost to the CITY. The costs for retesting such Work shall be paid for by the CONTRACTOR.

3.08 ADDITIONAL EXCAVATION AND BACKFILL

A. Where organic material, such as roots, muck, or other vegetable matter, or other material which, in the opinion of the ENGINEER, will result in unsatisfactory foundation conditions, is encountered below the level of the proposed pipe bedding material, it shall be removed to a depth of two feet below the outside bottom of the pipe or to a greater depths as directed by the ENGINEER and removed from the site. Sheeting shall be installed if necessary to maintain pipe trenches within the limits identified by the ENGINEER. The resulting excavation shall be backfilled with suitable backfill material, placed in 12-inch layers, tamped and compacted up to the level of the bottom of the proposed pipe bedding material. Sufficient compaction of this material shall be performed to protect the proposed pipe against settlement. Lean concrete may be used in lieu of backfill when pipe installation is in the wet or at the CONTRACTOR’s option. Construction shall then proceed in accordance with the provisions of Article 3.05.

B. Additional excavation (more than two feet below the pipe) shall be performed when ordered by the ENGINEER. Where organic or other material is encountered in the excavation, the CONTRACTOR shall bring the condition to the attention of the ENGINEER and obtain his determination as to whether or not the material will require removal, prior to preparing the pipe bedding. The excavation of material up to a depth of two feet below the outside bottom incidental items of construction and the Work shall be done at no additional cost to the CITY. Where ordered by the ENGINEER, excavation greater than two feet below the pipe, backfill and additional sheeting, will be compensated by the CITY.

3.09 ALTERNATE METHOD OF CONSTRUCTION

A. Use of This Method: A combination of conditions in the substrate, water table, or method of disposal may be encountered during the course of the work which makes dewatering impossible. When such conditions are encountered, but only after all reasonable means (pumps, well points, etc.) to dewater the excavation have been employed without success, the CONTRACTOR, may request to employ the following Alternate Method of Construction. The concurrence of the ENGINEER shall be obtained in writing and shall limit the use of the alternate method of construction to such specific portions of the Work as the ENGINEER shall determine.

B. The requirements set forth in other sections of these Specifications shall establish the required standards of construction quality for this work. Use of the alternate method of construction described hereinafter shall in no way be construed as relieving the CONTRACTOR of the work. No additional payment will be made to the CONTRACTOR for excavation, backfill, sheeting or any cost incurred for Work or materials, or any other costs incurred as a result of the use of this alternate method of construction. The prices established in the Proposal shall be for full payment for the various items of work.

C. Subject to all the requirements stated herein, including written acceptance of the ENGINEER, construction will be permitted in accordance with the following specifications. All requirements of these Specifications shall apply to this construction unless otherwise specifically modified herein.

D. Removal of Water: The installation of pipe and appurtenances under water will be permitted and the requirements of Article 3.03 will be waived.

E. Excavation shall be performed in accordance with Article 3.01 to the specified limits. The excavation shall be completely cleaned of silt and other fines.

F. Pipe Bedding: Pipe bedding shall be placed from the bottom of the excavation to six inches above the top of the pipe. The bedding material shall be screened gravel or crushed stone as specified in Article 2.01. Limerock screenings, sand or other fine organic material shall not be used.

G. The bedding material shall be placed to the lower third of the pipe barrel and then be shaped to receive the pipe at the intended elevation. Bedding shall be provided under the branch of all fittings to furnish adequate support and bearing under the fitting. After the pipe section is installed and tested if required, the remaining bedding shall be placed to the top of the pipe.

H. Select backfill material shall be used to backfill from 6 inches above the top of the pipe to a level one foot above standing ground water. The lift shall then be compacted per Article 3.07. General backfill shall then be placed in 8-inch lifts and compacted per Article 3.07.

I. If the Alternate Method of Construction is used, all backfill material, including specified pipe bedding material, shall be carefully lifted into the trench and not released to fall freely therein until the bucket or container is at or just above water level. Under no circumstances shall backfill material be dumped or pushed into the trenches containing water. Below water level, the bedding and backfill material shall be carefully rammed into place in uniform layers, of equal depth on each side of the pipe, up to one foot above the water level. Above the water level, backfill material shall be placed and compacted for normal backfill as previously specified.

3.10 RESTORATION OF EXISTING SURFACES

A. Restore all grassed areas disturbed by the trenching operations by resodding in accordance with Section 02900 – Sodding.

- END OF SECTION –

SECTION 02224

EXCAVATION AND BACKFILL FOR STRUCTURES

Part 1 - GENERAL

1.01 THE REQUIREMENT

A. This Section includes, except as elsewhere provided, excavation, filling and compacting work for the piping installation.

1.02 RELATED WORK SPECIFIED ELSEWHERE

A. Section 01300 - Submittals
B. Section 01560 – Temporary Environmental Controls
C. Section 02140 – Dewatering
D. Section 02210 - Earth Excavation, Backfill, Fill and Grading
E. Section 02222 – Excavation and Backfill for Utilities

1.03 QUALITY CONTROL

A. Codes and Standards: Excavation and backfill work shall be performed in compliance with applicable codes, standards and requirements of governing authorities having jurisdiction in the area.
B. Testing and Inspection Service: An independent testing laboratory (Testing Laboratory) will be selected by the CITY to conduct appropriate field and laboratory tests on soils and other materials in accordance with the Contract Documents. The first round of tests will be paid for from the “Cost Allowance for Permits, Licenses and Fees”. The costs of any subsequent recompaction and retesting due to not achieving the required minimum compaction will be borne by the CONTRACTOR at no additional cost to the CITY.

1.04 JOB CONDITIONS

A. Existing Utilities

1. Locate existing underground utilities in the areas of work. Test pits and hand excavation in critical areas will be required prior to initiating work.
2. All existing utilities including piping, electrical conduits, electric duct banks and telephone cables that are shown on the Contract Drawings to be relocated, shall be relocated prior to initiating earth work. Excavation and backfill for relocation of existing utilities shall conform to the requirements of Section 02222 - Excavation and Backfill for Utilities. The CONTRACTOR shall coordinate relocation of utilities with utility companies having jurisdiction in the area. Should unknown or incorrectly identified piping or other utilities be encountered during excavation, the CONTRACTOR shall consult the CITY, ENGINEER and Owner of such piping/utility for directions.

3. The CONTRACTOR shall cooperate with the CITY and utility companies in keeping respective services and facilities in operation.

1.05 PROHIBITION OF BLASTING

A. The use of explosives for excavation work is strictly prohibited on this project.

1.06 SUBMITTALS

A. The CONTRACTOR shall submit information and samples to the ENGINEER for review as specified herein in accordance with Section 01300. The information shall include:

1. Detailed description of the dewatering method chosen and sequence of dewatering operations, if dewatering is necessary.
2. Plans showing the methods and locations of dewatering and discharge. The drawings shall include a sufficient number of detailed sections to clearly illustrate the scope of work. The drawings showing all of the above information, including calculations, shall be prepared by a qualified Professional Engineer registered in the state of Florida, and shall bear its seal and signature. A copy of any relevant dewatering permit shall be submitted.
3. Lists of materials and equipment to be used.
4. Detailed description of the selected method(s) of excavation, fill and compaction.
5. Plans of open cut excavations showing side slopes and limits of the excavation at grade where not shown on the Contract Drawings. The traffic lane to be closed and maintained shall be indicated in the submittal.
6. Design computation of sheeting system. Sheeting and shoring plans shall be designed and sealed by a professional Engineer registered in the State of Florida. Submittals shall indicate depth of penetration.
7. The CONTRACTOR shall furnish the ENGINEER, for approval, a representative sample of structural fill material from off-site sources at least ten calendar days prior to the date of anticipated use of such material. The sample shall be delivered to the site at a location determined by the ENGINEER. The submittal shall identify the source of the material.

1.07 PROTECTION OF PROPERTY AND STRUCTURES

A. The CONTRACTOR shall, at its own expense, sustain in place and protect from direct and indirect injury, its work at all times as well as all pipes, poles, conduits, walls, buildings, and all other structures, utilities and property in the vicinity of its work. Such sustaining shall be done by the CONTRACTOR. The CONTRACTOR shall take all risks attending the presence or proximity of pipes, poles, conduits, walls, buildings and all other structures, utilities, and

property in the vicinity of its work. It shall be responsible for all damage, and assume all expenses, for direct or indirect injury and damage, caused by its work, to any such pipes, structures, etc., or to any person or property, by reason of injury to them, whether or not such structures, etc., are shown on the Drawings.

B. Barriers and lights shall be placed at all excavations in accordance with OSHA requirements.

C. Safe and suitable ladders for access to trenches shall be provided in accordance with OSHA requirements.

Part 2 - PRODUCTS

2.01 GENERAL

A. Specific locations/areas of work where these materials shall be utilized are defined on the Drawings.

2.02 STRUCTURAL FILL

A. Fill material shall be non-cohesive, non-plastic, granular mixture of local clean sand or local clean sand and limerock free from vegetation, organic material, muck or deleterious matter. Material shall conform to AASHO-2 gradation with no more than ten (10) percent by weight passing the No. 200 sieve. All rock or hard material shall pass through a 3-inch diameter ring. Broken Portland cement or asphaltic concrete shall not be considered an acceptable fill material. Fill material containing limerock shall have sufficient sand to fill the voids in the limerock. Material placed in the upper 6-inches of all backfills or fills shall not contain any stones or rocks larger than 1-inch in diameter. Limits of excavation and fill shall be as defined on the Drawings. All structural fill materials shall be obtained from off-site sources.

2.03 OTHER MATERIALS

A. Requirements for any other fill material, if needed, are defined on the Drawings.

Part 3 - EXECUTION

3.01 CONTRACTOR INSPECTIONS

A. Examine the areas and conditions under which excavating, filling, and grading are to be performed. Do not proceed with the work until unsatisfactory conditions have been corrected.

B. Examine and accept existing grade of the project site walkways, pavements, etc., prior to commencement of work and report to ENGINEER if elevations of existing subgrade substantially vary from elevations shown on the Drawings.

3.02 EXCAVATION FOR STRUCTURES

A. Unless otherwise indicated on the Drawings, all excavation shall be made in such a manner, and to such widths, as will give ample room for properly constructing and inspecting the structures they are to contain. Excavation shall be made in accordance with the details shown on the Drawings, and as specified herein. Attention shall be given to the proper handling of storm water runoff. The CONTRACTOR shall intercept and collect surface run off both at the top and bottom of cut slopes. The excavating equipment shall operate in an organized fashion so as to remove silt from one edge of the excavation to the other so as not to trap silt within the undercut area.
B. Where required on the Drawings, unsuitable material (silt layer) beneath the groundwater encountered at the site shall be removed using equipment, as approved by the ENGINEER. The equipment shall operate in an organized manner so as to remove silt from one edge of the excavation to the other so as not to trap silt within the undercut area. Unsuitable material shall be drained while being removed, removed and disposed of off-site by the CONTRACTOR. The CONTRACTOR shall clean all roadways impacted by his demucking, hauling, any temporary stockpiling and removal operations at a frequency as determined by the ENGINEER in the field.
C. In excavating for footings and foundations, the CONTRACTOR shall take care not to disturb bottom of excavation. Excavate by hand to final grade just before concrete reinforcement is placed. Trim bottoms to required lines and grades to leave solid base to receive concrete.
D. The CONTRACTOR shall ensure that its excavation work does not adversely affect the bearing capacity of the structural subsurface. Also, the CONTRACTOR shall proceed with foundation work immediately after excavation work and as expeditiously as possible so as to minimize any potential for subsurface disturbance due to environmental factors, adverse weather, etc. The CONTRACTOR shall also take all necessary precautions to protect its work from potential adverse impacts. Where excavated areas are disturbed by subsequent operations or adverse weather, scarify surface, reshape, fill as required, and compact to required density.
E. All excavated soil material, removed underground utilities including pipes and fittings, electrical conduits and duct banks, and other undefined materials removed within the limits of the excavation, shall be disposed off-site by the CONTRACTOR.
F. Refer to the Drawings for additional requirements for excavation for specific locations/areas of work.

3.03 UNAUTHORIZED EXCAVATION

A. Excavation work carried outside of the work limits required by the Contract Documents shall be at the CONTRACTOR's expense, and shall be backfilled by the CONTRACTOR at its own expense with structural fill, as directed by the ENGINEER. Where, in the judgment of the ENGINEER, such over-excavation requires use of lean concrete or crushed stone, the CONTRACTOR, at its expense, shall furnish and place such materials.

3.04 SHEETING AND BRACING

A. The term "sheeting" shall represent any type of shoring used to support sides of the excavation. Walls of the excavation shall be kept vertical where open cut is not practical and, if required to protect the safety of workmen, the general public, this or other work or structure, or excavation walls, the excavation shall be properly sheeted and braced for conditions encountered and in conformance with OSHA requirements. Excavation for the structures shall be sufficient to provide a clearance between their outer surfaces and the face of the excavation, sheeting, or bracing, of not less than two feet, unless otherwise indicated on the Drawings. Materials encountered in the excavation, which have a tendency to slough or flow into the excavation, undermine the bank, weaken the overlying strata, or are otherwise rendered unstable by the excavation operation shall be retained by sheeting, stabilization, grouting or other acceptable methods.
B. Minimum length of embedment below the deepest part of the excavation shall be 0.3 times the depth of excavation being supported or greater depending on the sheeting. The design of the sheeting arrangement shall be the responsibility of the CONTRACTOR.
C. Sheeting shall be removed provided its removal will not jeopardize pipes or structures. Any sheeting left in place must be authorized by the ENGINEER and shall be cut-off two feet below finished grade, or as directed. The CONTRACTOR will not receive extra compensation for sheeting left in place or the cut off work required.

3.05 REMOVAL OF WATER

A. General

1. Removal of groundwater, or dewatering, shall be accomplished in accordance with the requirements of Section 02140, “Dewatering”, and as indicated below. In the event these requirements are in conflict, the most stringent shall govern.
2. The CONTRACTOR shall provide pumps, well points, and other appurtenant equipment necessary to remove and maintain water at such a level as to permit construction in the dry where defined on the Drawings.

The ground water level shall be controlled so as to permit the placing and curing of concrete and the maintenance of supporting foundations and adjacent work and structures in the dry.

3. The CONTRACTOR shall use dewatering systems that include automatic starting devices, and standby pumps that will ensure continuous dewatering in the event of an outage of one or more pumps.
4. If excavations to be dewatered cannot be maintained dry by the CONTRACTOR's dewatering efforts, then the CONTRACTOR shall provide tremie seals at no additional cost to the CITY. The placement of tremie seals shall not preclude dewatering operations specified herein. The limits of tremie seals shall be recommended by the CONTRACTOR and reviewed and accepted by the ENGINEER.
5. Dewatering Permits: If the quantity and/or nature of water withdrawn require approval/permits from regulatory agencies, the CONTRACTOR shall procure such permits at its expense, and submit copies to the ENGINEER before commencing the work. The CONTRACTOR will not be granted contract time extensions due to dewatering permit processing delays.

B. Disposal: The CONTRACTOR shall be responsible to dispose of water from the dewatering operation in accordance with the Contract Documents and shall obtain all necessary permits and conform to all local regulations and codes. Water from the excavation shall be disposed of in such a manner as will not cause injury to public health, to public or private property, to the work completed or in progress, to the surface of the streets, will not cause any interference with the use of the same by the public, or will not cause pollution of any waterway or stream. Water from dewatering operation may be disposed at locations directed by the CITY with the proper installation of siltation screens and operation of the dewatering system in accordance with all local regulations and codes. The CONTRACTOR shall submit its dewatering method and point(s) of discharge to the ENGINEER for review at least twenty (20) days prior to any dewatering activities. The CONTRACTOR shall provide maintenance of canal(s) and drainage ditches to which it discharges. The cost of maintaining drainage ditches and canal(s) shall be included in the bid price. The CONTRACTOR shall remove siltation and haul, and dispose of this material on a regular basis to maintain the original base conditions at all time, so as not to impact drainage in the general area.

3.06 FILL PLACEMENT AND COMPACTION

A. General

1. Fill material (including structural fill and other fill material) shall be placed within the limits of excavations as shown on the Drawings. When placed

in the wet, fill material shall be placed in standing groundwater to a level one foot above stabilized groundwater. The material shall be placed at one edge of the excavation and pushed to the other so as to move residuals across the bottom of the excavation. The leading edge of the fill should be cleaned regularly to remove it of the advancing residuals. All residuals shall be disposed at off-site locations shown on the Drawings or specified herein.

2. Once fill materials have been placed up to one foot above the stabilized groundwater, the entire lift should then be rolled with six passes from a 10-ton roller. The coverage shall be overlapping, and shall occur while the compactor is operated at a travel speed of not more than two feet per second. If a vibratory compactor is used, it should be operated with the vibrator off so as not to induce capillary moisture into the dry fill soils.
3. Fill materials placed following this initial lift shall be placed in the dry with loose lift thickness of eight inches or less. Each lift shall be compacted to achieve a minimum of 98 percent Modified Proctor maximum dry density in accordance with ASTM D1557. Fill materials shall be placed within two percent of optimum moisture content.

B. Inspection and Testing: The fill placement and compaction shall be observed by the ENGINEER. As a minimum, an in-place density test will be made in each lift of compacted soil for every 2,500 square feet of area. The CONTRACTOR shall coordinate and cooperate with the Testing Laboratory.
C. Final Grades: Final structure fill grades shall be within 0.1 feet of elevations shown. Where shown on the Drawings, surfaces shall be sloped for drainage or other surfaces.
D. Refer to the Drawings for additional fill and compaction requirements for specific locations/areas of work.

3.07 BACKFILL AGAINST STRUCTURES

A. Backfill against non-water holding structures shall not be performed until the concrete has been inspected by the ENGINEER. Backfill against walls shall also be deferred until the structural slab for floors above the top fill line have been placed and attained design strength. Partial backfilling against adequately braced walls may be considered by the ENGINEER on an individual situation basis. Where walls are to be waterproofed, all work shall be completed and membrane materials dried or cured according to the manufacturer’s instructions before backfilling.

- END OF SECTION -

SECTION 02225

CONTAMINATED SOILS AND GROUNDWATER

Part 1 - GENERAL

1.01 THE REQUIREMENT

A. This Section includes, except as elsewhere provided, the work necessary to remove, transport, and properly dispose of contaminated soils and groundwater required for complete construction of structures and underground piping systems and appurtenances as shown on the Drawings and specified herein.

1.02 RELATED WORK SPECIFIED ELSEWHERE

A. Section 02222 – Excavation and Backfill for Utilities
B. Section 02224 – Excavation and Backfill for Structures

1.03 QUALITY CONTROL

A. Codes and Standards: All work associated with dewatering, excavation, removal, transportation and disposal of contaminated soils and groundwater shall be performed in compliance with applicable codes, standards and requirements of governing authorities having jurisdiction in the area.
B. Testing and Inspection Service: A testing laboratory certified by the Broward County Environmental Protection and Growth Management Department (BCEPGMD) and the State of Florida shall be retained by the CONTRACTOR to conduct appropriate soils and groundwater testing in accordance with regulatory requirements and the Contract Documents.

1.04 SUBMITTALS

A. The CONTRACTOR shall submit information and samples to the CITY for review as specified herein in accordance with Section 01300. The information shall include:

1. Detailed description of the proposed methods for temporary stockpiling, transportation, and disposal of all contaminated soils and groundwater.
2. Copies of permits for all disposal facilities.
3. Copies of all manifest and documentation for handling and disposing of all contaminated soil and groundwater in full compliance with local, state and federal requirements. This documentation must be provided prior to requesting payment under this Bid item.
4. Copies of all laboratory analyses required for transportation and disposal of all contaminated soils and groundwater in full compliance with local, state and federal requirements.
5. Names, addresses and contact numbers of all subcontractors.

6. Copy of Contractor's Health and Safety Plan and training certificates of personnel who will be handling the contaminated material in accordance with OSHA requirements.

Part 2 - PRODUCTS (NOT USED)

Part 3 - PART 3 - EXECUTION

3.01 CONTAMINATED SOILS

A. The CONTRACTOR shall retain a laboratory certified by the BCEPGMD and the State of Florida to sample the groundwater in the excavation, the stored soil and soil samples in the perimeter of the excavated hole for petroleum contamination (EPA Methods 601, 602, 610). The number of samples shall be sufficient to comply with the requirements of the CONTRACTOR's approved Dewatering Plan and all local, state and federal regulations. The results of the tests shall be forwarded to the CITY.

B. Excavated materials which are deemed to be contaminated shall be removed, treated and disposed of by the CONTRACTOR in accordance with all applicable regulatory requirements. The soil may be contaminated with petroleum product which may be partly or entirely diesel fuel or gasoline. When such soil conditions are encountered, they shall be brought to the CITY's attention. The extent of excavation shall be determined in the field by the CITY. Payment for this work shall be in accordance with the allowance bid item for excavation, treatment and disposal of contaminated soil, included in the Schedule of Prices Bid.

C. All contaminated soil which is excavated shall be stockpiled in an area designated for contaminated soils. The CONTRACTOR shall take whatever precautions are necessary to ensure that contaminated soils are not co-mingled with non-contaminated stockpiled soils and/or mucks.

D. Contaminated soils must be placed on an impermeable barrier when temporarily stockpiled and must be covered with visquine to prevent runoff. All stockpile leachate or runoff must be collected for disposal in accordance with federal, state and local regulations.

E. Contaminated soils shall be processed and treated at a state licensed facility. These soils shall be transported and disposed of in accordance with federal, state and local regulations.

F. The CONTRACTOR shall be responsible for testing soil which has been treated to certify treated soil meets applicable federal, state, and local regulations for final disposal.

3.02 CONTAMINATED GROUNDWATER

A. All water generated, pumped or removed from excavations as a result of excavation dewatering activities shall be collected, containerized, and managed prior to discharge and/or treatment at an approved discharge point in accordance with local, state and federal regulations and the requirements of the Contract Documents. If groundwater contamination is identified at any time during the performance of the Work, CONTRACTOR shall immediately notify the CITY.

B. If contaminated groundwater in the dewatering excavation area is encountered, the contaminated groundwater shall be removed, treated and discharged by the CONTRACTOR in accordance with all applicable regulatory requirements. Payment for this work shall be in accordance with the allowance bid item for treatment and discharge of contaminated groundwater, included in the Schedule of Prices Bid.

C. Treatment of contaminated groundwater will include the following options, depending on the magnitude of the contamination in the trench: Granular Activated Carbon (GAC) Treatment vessels, mobile air stripping units, vacuum truck removal and disposal or other method as approved by the CITY and regulatory agencies with jurisdiction.

D. If contaminated groundwater is encountered during construction, CONTRACTOR shall provide reference information for the qualified groundwater remediation subcontractor to be utilized, including phone number, contact name, and address. The selected groundwater treatment/recycling facility for hauling contaminated groundwater shall also be identified.

E. Effluent water from the treatment system will be analyzed by the certified laboratory to confirm that concentrations are below regulatory limits. Effluent water will then be directed to a pre-approved location as determined by local regulatory agencies and/or the CITY.

3.03 TRANSPORT AND DISPOSAL

A. Transport Regulations: The CONTRACTOR shall be responsible for the loading, labeling, placarding, marking, weighing, and transporting of all waste materials in accordance with the Florida Department of Transportation Regulations, and U.S. Department of Transportation Regulations. The CONTRACTOR shall use only transporters that are licensed and competent to haul these wastes.

3.04 WASTE CONTAINERS

A. Each transport container of waste shall be visually inspected by the CONTRACTOR for leaks, drips, or container damage prior to being loaded. Containers which are found to be leaking or damaged shall not be loaded until the damage is repaired. The CONTRACTOR shall prepare the transport container to prevent spillage or contamination. The CONTRACTOR shall notify the CITY two hours before any loaded transport leaves the site.
B. All transport containers leaving the site shall be inspected by the CONTRACTOR to ensure that no waste material adheres to the wheels or undercarriage.
C. All vehicles on which waste is adhering shall be cleaned by sweeping tires and undercarriage or by other dry methods prior to leaving the site.

3.05 SHIPPING RECORDS

A. The CONTRACTOR shall prepare accurate shipping records for any wastes leaving the site in accordance with applicable federal and state regulations. The CONTRACTOR shall be responsible for providing copies of the records to the CITY and shall immediately notify the CITY of any problems in completing shipments and disposal of wastes.
B. The CONTRACTOR shall:

    1. Be responsible for appropriate measurement of unit quantity (weight or volume) of waste material removed from the site.
    2. Coordinate vehicle inspection and recording of quantities leaving the site with the CITY. These quantities shall be compared to recorded quantities received at the treatment or disposal facilities. The CONTRACTOR shall resolve any discrepancies occurring immediately, determining the probable cause for the discrepancy.
    3. Be solely responsible for any and all actions necessary to remedy situations involving waste spiked in transit.

C. The CONTRACTOR shall ensure that a copy of the manifest and disposal receipt/bill of lading are returned to the CITY by the designated treatment or disposal facility within 14 days of receipt of the material to be disposed.

- END OF SECTION -

SECTION 02260

FINISH GRADING

Part 1 - GENERAL

1.01 WORK INCLUDED

A. The CONTRACTOR shall, under this Section, supply, place, compact and roll finish grade materials prior to landscaping work.
B. Finish grade sub-soil.
C. Cut out areas to receive stabilizing base course materials for paving and sidewalks.
D. Place, finish grade and compact topsoil.

1.02 RELATED WORK

A. Section 02210 - Earth Excavation, Backfill, Fill and Grading
B. Section 02222 - Excavation and Backfill for Utilities
C. Section 02224 - Excavation and Backfill for Structures
D. Section 02930 - Sodding

1.03 PROTECTION

A. The CONTRACTOR shall prevent damage to existing fencing, trees, landscaping, natural features, bench marks, pavement, utility lines, and sprinkler system. Correct damage at no cost to the CITY.

Part 2 - PRODUCTS

2.01 MATERIALS

A. Topsoil shall be friable loam free from subsoil, roots, grass, excessive amount of weeds, stones and foreign matter; acidity range (pH) of 5.5 to 7.5; containing a minimum of 4% and a maximum of 25% organic matter.

2.02 CRUSHED STONE

A. Crushed stone for general grading purposes shall be hard, durable, subangular particles of proper size and gradation, and shall be free from organic materials, wood, trash, sand, loam, chalk, excess fines and other deleterious materials. Maximum aggregate size shall be ¾ inches.

Part 3 - EXECUTION

3.01 SUBSOIL PREPARATION

A. Rough grade subsoil systematically to allow for a maximum amount of natural settlement and compaction. Eliminate uneven areas and low spots. Remove debris, roots, branches, stones, etc., in excess of 2 inches in size. Remove sub-soil which has been contaminated with petroleum products.
B. Cut out areas, to subgrade elevation, which are to receive stabilizing base for paving and sidewalks.
C. Bring subsoil to required levels, profiles and contours. Make changes in grade gradual. Blend slopes in to level areas.
D. Slope grade away from building minimum 4 inches in 10 feet (unless indicated otherwise on Drawings).

3.02 PLACING TOPSOIL

A. Place topsoil in area where seeding, sodding and planting is to be performed. Place to the following minimum depths, up to finished grade elevations:

1. 6-inches for seeded areas.
2. 4 1/2-inches for sodded areas.
3. 24-inches for shrub beds.
4. 18-inches for flower beds.

B. Use topsoil in relatively dry state. Place during dry weather.
C. Fine grade topsoil eliminating rough and low areas to ensure positive drainage. Maintain levels, profiles and contours of subgrade.
D. Remove stones, roots, grass, weeds, debris and other foreign material while spreading.
E. Manually spread topsoil around trees, plants, buildings and other structures to prevent damage which may be caused by grading equipment.
F. Lightly compact placed topsoil.

3.03 SURPLUS MATERIAL

A. Remove surplus sub-soil and topsoil from site.
B. Leave stockpile areas and entire job site clean and raked, ready to receive landscaping and or sodding.

- END OF SECTION -

SECTION 02332

LIMEROCK BASE

Part 1 - GENERAL

1.01 WORK INCLUDED

A. Furnish all labor, materials, equipment and incidentals required to provide limerock base in accordance with the grades and typical sections shown on the Drawings and as specified herein.

1.02 RELATED WORK:

A. Section 02100 – Clearing and Grubbing.
B. Section 02260 – Finish Grading
C. Section 02510 - Asphaltic Concrete Pavement.

Part 2 - PRODUCTS

2.01 MATERIALS

A. Source: The material used in limerock base courses shall be material classified as either Miami Oolite Formation or Ocala Formation at the CONTRACTOR'S option; however, only one formation may be used.
B. Limerock material shall contain not less than 70 percent of carbonates of calcium and magnesium. The maximum percentage of water sensitive clay material shall be 3.
C. Graduation: At least 97 percent (by weight) of the material shall pass a 3-1/2-inch sieve and the material shall be grades uniformly down to dust. The fine material shall consist entirely of dust of fracture. All crushing or breaking up which might be necessary in order to meet such size requirements shall be done before the material is placed on the road.
D. Quality:

1. The limerock material shall be uniform in quality and shall not contain cherty or other extremely hard pieces or lumps, balls or pockets of sand or clay size material in sufficient quantity as to be detrimental to prevent proper bonding, finishing or strength of limerock base. Limerock material shall be non-plastic, and the liquid amount shall not exceed 35.
2. Compacted limerock material shall have an average LBR value of not less than 100.

Part 3 - EXECUTION

3.01 PREPARATION

A. For new limerock base construction, or areas where pavement is to be replaced, CONTRACTOR shall remove existing subgrade as required to provide the minimum thickness of new limerock base course as indicated on plans.
B. Compact subgrade to a density of no less than 98% of maximum density as determined by AHSHTO T-180.
C. No separate bid item is provided in the proposal for evacuating, grading and compacting subgrade. The cost thereof shall be included in the BID schedule items.

3.02 PERFORMANCE

A. Transporting Limerock: The limerock shall be transported to the point where it is to be used, over rock previously placed if practicable, and dumped on the end of the preceding spread. No hauling over the subgrade or dumping on the subgrade shall be done.
B. Spreading Limerock:

1. The limerock shall be spread uniformly, and all segregated areas of fine or coarse rock shall be removed and replaced with well-graded rock.
2. When the specified compacted thickness of the base is greater than 6-inches, the base shall be constructed in two courses. The thickness of the first course shall be approximately one-half the total thickness of the finished base, or enough additional to bear the weight of the construction equipment without disturbing the subgrade.

C. Establish grades and cross-sections conforming to plans

1. Provide a minimum of 8 inches of limerock as required to provide grades, elevations and cross sections, or as indicated on plans.
2. For asphalt driveway restoration, the limerock base course shall be a minimum of 6 inches thick.
3. The CONTRACTOR must determine for himself the volume of material required for the site.

D. Compacting and Finishing Base:

SECTION 02332

LIMEROCK BASE

1. Work shall comply with Sections 200 of the FDOT Standard Specifications for Road and Bridge Construction.
2. Proposed limerock base shall be compacted to a minimum of ninety-eight percent (98%) of maximum density as determined by ASHTO T-180. Properly compact areas adjacent to curbs, catch basins, manholes and other areas not accessible to rollers with mechanical or hand tamping devices.
3. Correction of Defects:

   (a) If at any time the subgrade material should become mixed with the base course material, the CONTRACTOR shall dig out and remove the mixture, which shall be shaped and compacted as specified above.
   (b) If cracks or checks appear in the base, either before or after priming, which in the opinion of the ENGINEER would impair the structural efficiency of the base course or checks by rescarifying, reshaping, adding base material where necessary and recompacting.

4. Field and laboratory testing shall be performed by an independent testing laboratory selected by the City. The first round of tests will be paid from the “Cost Allowance for Permits, Licenses and Fees”. In the event compacted material does not meet the specified minimum in-place density, the CONTRACTOR shall re-compact the material and density tests will be repeated until specified minimum results are obtained. All costs of recompaction and retesting shall be borne by the CONTRACTOR at no additional cost to the CITY.

- END OF SECTION -

SECTION 02507

PRIME AND TACK COATS

Part 1 - GENERAL

1.01 WORK INCLUDED

A. The work specified in this section consists of an application of bituminous material on previously prepared base in accordance with these specifications and in conformity with the line, grades, dimensions and notes shown on the Drawings.
B. Tack coat will be required prior to overlaying existing pavement.

1.02 RELATED WORK

A. Section 02510 - Asphaltic Concrete Pavement

Part 2 - PRODUCTS

2.01 MATERIALS

A. Prime Coat: Unless otherwise indicated, the material used for the prime coat shall be cut back asphalt, Grade RC-70 or RC-250 and shall conform with the requirements specified in AASHTO Designated M 81-75 (1982). Unless otherwise indicated, the use of either RC-70 or RC-250 shall be at the CONTRACTOR'S option.
B. Tack Coat: The material used for the tack coat shall be emulsified asphalt, Grade RS-2 and shall conform with the requirements specified in AASHTO Designation M 140-82.

2.02 EQUIPMENT

A. The pressure distributor used for placing the tack or prime coat shall be equipped with pneumatic tires having sufficient width of rubber in contact with the road surface to avoid breaking the bond of or forming a rut in the surface. The distance between the centers of openings of the outside nozzles of the spray bar shall be equal to width of the application required, within an allowable variation of 2-inches. The outside nozzle at each end of the spray bar shall have an area of opening of not less than 25 percent, nor more than 75 percent in excess of other nozzles which shall have uniform openings.
When the application covers less than the full width, the normal opening of the end nozzle at the junction line may remain the same as those of the interior nozzle.

Part 4 - EXECUTION

4.01 PREPARATION

A. Before applying any bituminous material, all loose material, dust, dirt, and foreign material, which might prevent proper bond with the existing surface, shall be removed. Particular care shall be taken to clean the outer edges of the strip to be treated in order to insure that the prime or tack coat will adhere.
B. When the prime or tack coat is applied adjacent to curb and gutter, or another concrete surface (except where they are to be covered with a bituminous wearing coarse) such concrete surfaces shall be protected by heavy paper or other protective material while the primer or tack coat is being applied. Any bituminous material deposited on such concrete surfaces shall be removed immediately.

4.02 WEATHER LIMITATIONS

A. No bituminous material shall be applied when the air temperature is less than 50 degrees Fahrenheit in the shade, or when the weather conditions or the condition of the existing surface is unsuitable. In no case shall bituminous material be applied while rain is falling or when there is water on the surface to be covered.

4.03 APPLICATION OF PRIME COAT

A. After the base has been finished the full width of surface shall be swept with a power broom supplemented with hand brooms and mechanical blowers prior to the application of prime coat. Care shall be taken to remove all loose dust, dirt and objectionable matter. If deemed necessary, the base shall be lightly sprinkled with water immediately in advance of the prime coat. The prime coat shall be applied to the full width of the base.
B. The temperature of the prime material shall be such as to insure uniform distribution. The material shall be applied with a pressure distributor as specified above. The amount to be applied shall be sufficient to coat the surface thoroughly and uniformly without any excess to form pools or to flow off the base. For limerock base, the rate of application shall not be less than 0.10 gallons per square yard; for shell base, the rate of application shall not less than 0.15 gallons per square yard.
C. If the roadway is to be opened for use following the application of the prime material, a light uniform application of clean sand shall be applied and rolled. The sand shall be nonplastic, shall be free from slit and rock particles and shall

not contain any sticks, vegetation, grass roots, or organic matter. After the sand covering has been applied, the surface may be opened to traffic.

4.04 APPLICATION OF TACK COAT

A. In general, a tack coat will not be used on primed bases except in areas which have become excessively dirty and cannot be cleaned or where the prime has cured and lost all of its bonding effect.
B. No tack coat shall be applied until the primed base or leveling course has been cleaned and is free from sand, dust or other objectionable material.
C. The tack coat shall be applied with a pressure distributor as specified above. It shall be heated to a suitable consistency and applied in a thin uniform layer at the rate of between .02 gallons and .08 gallons per square yard.
D. The tack coat shall be applied sufficiently in advance of the laying of the wearing surface to permit drying, but shall not be applied so far in advance or over such an area as to lose its adhesiveness as a result of being covered with dust or other foreign material. Suitable precautions shall be taken by the CONTRACTOR to protect the surface while the tack coat is drying and until the wearing surface is applied.

- END OF SECTION -

SECTION 02510

ASPHALTIC CONCRETE PAVEMENT

Part 1 - GENERAL

1.01 WORK INCLUDED

A. The work specified in this section consists of the construction of asphaltic concrete surface course composed of a mixture of aggregates, mineral filler and asphalt cement properly laid upon a prepared base or a newly constructed and compacted, primed and tacked roadway base course, in accordance with these specifications and in conformity with the lines, grades, thickness and typical cross section shown on the Drawings. The CONTRACTOR shall furnish asphaltic concrete surface course in the locations and to the extent indicated on the Drawings. Minimum required thickness shall be as listed below.

1. For new asphalt roadway pavement construction or reconstruction, provide asphaltic concrete structural surface course consisting of one of the following:

(a) “Superpave Asphalt Concrete” per Section 334 of FDOT Standard Specifications for Road and Bridge Construction
(b) Type S-III asphaltic concrete surface course
(c) Or as otherwise required by the roadway jurisdiction and/or as indicated on the plans.

Thickness of the asphalt course shall be one and a half (1.5”) inch thick minimum, or as specified on the Drawings.

1.02 QUALITY ASSURANCE

A. Construction of asphaltic concrete surface courses shall be in accordance with the Standard Specifications for Road and Bridge Construction (current edition), of the Florida Department of Transportation, and supplements thereto, hereinafter referred to as FDOT Specifications, except as amended herein. The FDOT Specifications are hereby made a part of this contract to the extent they are applicable thereto and shall be as binding upon the CONTRACTOR as though reproduced herein.

1.03 RELATED SECTIONS

A. Section 02332 - Limerock Base.
B. Section 02507 - Prime and Tack Coats.

Part 2 - PRODUCTS

2.01 MATERIALS

A. Bituminous Material: Asphalt cement, Viscosity Gard AC-20 or AC-30, shall conform to the requirements of FDOT Specifications, Section 916-1.
B. Coarse Material: Coarse aggregate, stone or slag shall conform to the requirements of FDOT Specifications, Section 901.
C. Fine Aggregate Material: Fine aggregate shall conform to the requirements of FDOT Specifications Section 902.
D. Mineral Filler: Mineral filler shall conform to the requirements of FDOT Specifications, Sections 917-1 and 917-2.

2.02 GENERAL COMPOSITIONS OF MIXTURE:

A. The bituminous mixture shall be composed of a combination of aggregate (coarse, fine, or mixture thereof), mineral filler, if required, and bituminous material. The several aggregate fractions shall be sized, uniformly graded and combined in such proportion that the resulting mixture will meet the grading and physical properties of the approved job mix formula.
B. In all cases, the job mix formula shall be within the design ranges specified in the following table.

Gradation Design Range

Sieve Size	% by Weight Passing Type S-III
¾-inch	
½-inch	100
3/8-inch	88-100
No. 4	60-90
No. 10	40-70
No. 40	20-45
No. 80	10-30
No. 200	2-6

2.03 JOB MIX FORMULA

A. No work shall be started on the specific project until the ENGINEER has approved the job mix formula.

B. The job mix formula shall conform to the requirements of FDOT Specifications, Section 334. In addition, the job mix formula shall include test data showing that the material as produced meets the requirements of the following table:

Mix Type	Minimum Marshall Stability (%)	Flow (0.01 in)	Minimum VMA (%)	Air Voids (%)	Min Effective Asphalt Content (%)
SP-9.5	1,500	8 – 14	15	3 – 7	5.5

Part 3 - EXECUTION

3.01 TRANPORTATION

A. The mixture shall be transported in tight vehicles previously cleaned of all foreign material and, if necessary, each load shall be covered with a waterproof canvas cover of sufficient dimensions to protect it from weather conditions. The inside surface of the truck bodies may be thinly coated with soapy water, or a mixture of water with not more than five percent of lubricating oil, but no excess of either shall be used. After the truck bodies are coated and before any mixture is placed therein, they shall be raised so that all excess water will drain out. Kerosene, gasoline or similar products shall not be used to prevent adhesion.

3.02 LIMITATION FOR SPREADING

A. The mixture shall be spread only when the surface is properly prepared and is intact, firm, cured and dry. No mixture shall be spread when the air temperature is less than 40 degree Fahrenheit, nor when the spreading cannot be finished and compacted during the daylight hours. The temperature of the mix at the time of spreading shall not be less than 230 degree Fahrenheit.

3.03 PLACING

A. The mixture shall be placed in accordance with the requirements of FDOT Specifications, Section 330-9. The new asphalt pavement shall be placed in two lifts. The second lift shall match the elevation of the adjacent pavement.

3.04 COMPACTING

A. The mixture shall be compacted in accordance with the requirements of FDOT Specifications 330-10.

3.05 JOINTS

A. Joints shall conform with the requirements of FDOT Specifications, Section 330-11.

3.06 FIELD QUALITY CONTROL

A. Surface Requirements: Depressions which may develop after initial rolling shall be remedied by loosening or removing the mixture and adding new material to bring the areas to a true surface. No skin patching shall be done. Such portions of the completed pavement which are defective in surface compaction or in composition, or that do not comply with all other requirements of these specifications, shall be taken up and replaced with suitable mixture, properly laid in accordance with these specifications and at the expense of the CONTRACTOR.
B. Surface depressions with standing water exceeding ¼" in depth will not be allowed by the City, and shall be repaired by the Contractor at no additional cost.
C. Thickness Requirements: The thickness of the compacted asphaltic concrete surface course shall be no less than that shown on the Drawings as determined by coring. Thickness testing and correction of defective work shall be as specified in FDOT Specifications, Section 330-14 and 330-15.
D. "As-Built" limerock elevations shall be signed and sealed by a registered land surveyor and submitted to the Project Engineer for approval prior to placement of asphalt. Elevation shall be taken at high and low points, midpoint, intersections and breaks in grade at intervals not to exceed 50 feet. No separate pay item is included in bid form for this work. Include limerock as-built cost in asphalt section.
E. Protection of Pavement: After the completion of the pavement, no vehicular traffic of any kind shall be permitted on the pavement until it has set sufficiently to prevent rutting or other distortion.

- END OF SECTION -

SECTION 02515

WATER SERVICE CONNECTIONS AND TRANSFERS

Part 1 - GENERAL

1.01 RELATED DOCUMENTS

A. All applicable provisions of the Contract Requirements shall govern the work under this Section.

1.02 WORK INCLUDED

A. This section covers the work necessary for service connections, laying service pipe, casing pipe, making connections to the new water main and to the existing service pipe, testing and flushing, and all incidental work necessary to accomplish the construction.
B. The work includes trench excavation, backfill and compaction, furnishing and installing service clamps, corporation stops or valves, meter yokes or connections, service connection piping, fittings, and appurtenances within the designated limits, testing, flushing, and other incidental work as required for a complete installation. Included are the installation and transfers of 5/8-inch, one (1) inch, 1½ inch, and two (2)-inch meter connections within the limits shown on the plans.
C. The approximate location of service connections to be installed or transferred will be suggested by the CONTRACTOR and approved by the ENGINEER and CITY.
D. All new domestic services shall be Polyethylene tubing per City of Hollywood Standard Detail W-11
E. Contractor shall coordinate all work with City of Hollywood Public Utilities staff.

1.03 RELATED WORK

A. Division 2 as applicable
B. Section 02222 - Excavation and Backfill for Utilities
C. Section 15000 - Piping General
D. Section 15001 - Water Services and Miscellaneous Fittings
E. Section 15100 - Valves, General
F. Water Distribution System.

Part 2 - PRODUCTS

2.01 EXCAVATION

A. Excavation shall conform to the requirements of Section 02222 - Excavation and Backfill for Utilities.

2.02 BACKFILL

A. Acceptable material excavated from the trench shall be used for trench backfill. Select backfill material for use in the pipe zone,
B. shall contain no material larger than one (1) inch in diameter.

2.03 MISCELLANEOUS FITTINGS

A. Refer to Section 15001 – Water Services and Miscellaneous Fittings

2.04 SERVICE CONNECTION SIZE

A. The location and size of service connection to be transferred or installed will be as determined in the field by CONTRACTOR. The meter and meter box will be installed by CONTRACTOR if required. Minimum tap size shall be one (1) inch. If water meter is to be installed by CONTRACTOR, Class III water License Certification is required.

Part 3 - EXECUTION

3.01 TRENCH EXCAVATION AND BACKFILL

A. Conform to the requirements of Section 02222 - Excavation and Backfill for Utilities. Place only select backfill material in the trench within six (6) inches of the service connection pipe or line. Cover around pipe shall be 8 inches or as indicated on the plans. Backfill and compact remainder of trench with excavated material as specified in the referenced section.

3.02 CONNECTION TO MAIN

A. Clean exterior of main of dirt or other foreign matter that may impair the quality of the completed connection. Then place service clamp at the desired location and clamp tight by tightening alternate nuts progressively. Do not place service clamp within one (1) foot of pipe joint or other clamp.
B. Taps shall be made in the pipe by experienced workmen using tools in good repair with the proper adapters for the size main being tapped.

3.03 PREPARATION OF TRENCH

A. Grade the bottom of the trench by hand to the line and grade to which the pipe is to be laid, with proper allowance for special bedding. All other conditions and operations as specified in Section 02222, Excavation and Backfill for Utilities must be adhered to. The trench bottom shall form a continuous and

uniform bearing support for the pipe. A six (6) inch layer of imported earth or other specified material will be required over and under pipe in areas where suitable trench side material is not available.

3.04 UNDERCROSSING OF ASPHALT-SURFACED ROADS

A. Service connection piping under asphalt-surfaced roads shall be bored or jacked. Open cutting of asphalt-surfaced roads is not permitted except at the direction of the ENGINEER. The service connection pipe shall be installed so that it has a minimum cover of two (2) feet with a slight grade sloping away from the water main.

3.05 POLYETHYLENE PLASTIC TUBING

A. Refer to Section 15001 – Water Services and Miscellaneous Fittings

3.06 HYDROSTATIC TEST AND LEAKAGE

A. Test service connections and service connection tubing by either testing in conjunction with the main at the test pressure required for the main, or by testing at the normal hydrostatic main pressure after the main has been completely installed and tested. Inspect visually for leaks and repair any leaks before backfilling. Sufficient sampling points shall be taken from service line connections to assure uniform results throughout the system being tested Duration of the test shall be at least fifteen (15) minutes.

3.07 DISINFECTION

A. Service connection transfers shall be disinfected as follows:

1. Make connection to the main pipeline which shall have been previously hydrostatically tested and disinfected.
2. Prior to connecting plastic tubing to existing copper tubing or meter stop, flush new plastic tubing by fully opening corporation stop and allowing water to run for 2 minutes.
3. Close corporation stop and meter stop, connect new plastic tubing to existing copper tubing or to meter stop, as applicable. Open corporation stop and allow to stand for a minimum of 30 minutes retention period. Open meter stop.

B. The City may put extra chlorine in the water system during the time of service connection transfers to provide sufficient chlorine residual to adequately disinfect service connections when the above procedure is followed.

- END OF SECTION -

SECTION 02526

CONCRETE PAVEMENT, CURBS AND SIDEWALKS

Part 1 - GENERAL

1.01 THE REQUIREMENT

A. Concrete pavement, curbs and sidewalk shall be constructed to the lines and grades and dimensions required for a complete installation as shown on the Drawings and specified herein.

1.02 SUBMITTALS

A. Shop drawings for reinforcing, joint material and mix designs shall be submitted for review in accordance with Section - 01300 - Submittals.

Part 2 - PRODUCTS

2.01 CONCRETE

A. Concrete shall be Class B, conforming to Section 03300 – Cast-in-place Concrete, Reinforcing and Formwork", unless noted or specified otherwise.

2.02 REINFORCING AND WELDED WIRE FABRIC

A. Joint reinforcing and welded wire fabric shall conform to Section 03300 – Cast-in-place Concrete, Reinforcing and Formwork"

2.03 JOINT SEALER FOR PAVEMENT

A. Joint sealer shall be a one or two part polysulfide base self leveling sealant for horizontal surfaces that has been developed for foot and vehicular traffic. The sealant shall conform to the requirements of Section 07920 - Sealants and Caulking.

2.04 PREFORMED JOINT FILLER

A. Preformed joint filler shall be sponge rubber and conform to the requirements of AASHTO Designated M148, Type 1.

Part 3 - EXECUTION

3.01 SUBGRADE CONDITION

A. The finished subgrade shall be maintained in a smooth, compact condition and any areas which are disturbed prior to placing of the concrete shall be restored at the CONTRACTOR'S expense. The subgrade shall be moist at the time the concrete is placed. Water shall be uniformly applied ahead of the paving operations as directed by the ENGINEER. If the CONTRACTOR does not maintain the subgrade in the required moist condition, a vapor barrier sheet will be required between the subgrade and the concrete.
B. The subgrade shall be accurately trimmed to the required elevation with a 1/4-inch tolerance. High areas shall be trimmed to proper elevation. Low areas may be filled with suitable material and compacted to the specified density or filled with concrete integrally with the placing of the pavement.

3.02 SETTING FORMS

A. The forms shall be accurately set to line and grade and such that they rest firmly, throughout their entire length, upon the compacted subgrade surface. Forms shall be joined neatly and tightly and braces to test the pressure of the concrete and the finishing operations. The alignment and grade of all forms shall be approved before and immediately prior to the placing of concrete.

3.03 MIXING CONCRETE

A. Concrete shall be mixed in accordance with Section 03300, “Cast-in-place Concrete, Reinforcing and Formwork”.

3.04 PLACING CONCRETE

A. The concrete shall be distributed on the subgrade to such depth, that, when it is consolidated and finished, the slab thickness required by the Drawings will be obtained at all points and the surface will at no point be below the grade specified for the finished surface, after application of the allowable tolerance. The concrete shall be deposited on the subgrade in a manner which will require as little rehandling as possible.
B. Fabric reinforcement, where required, shall be placed at mid slab depth, and the fabric shall be maintained at this location during the placing and finishing operations.

C. Concrete shall be thoroughly consolidated against and along the faces of all forms, by means of hand-operated, spud-type vibrators. Vibrators shall not be permitted to come in contact with the subgrade or a side form. Vibration at any one location shall not continue so long as to produce puddling or the accumulation of excessive grout on the surface. In no case shall the vibrator be operated longer than 15 seconds in any one location.

3.05 STRIKING-OFF, CONSOLIDATING AND FINISHING CONCRETE

A. Immediately after the placing, the concrete shall be struck off, consolidated and finished, to produce a finished pavement conforming to the cross section, width and surface. Sequence of operations shall be as follows: strike-off; vibratory consolidation; screeding; floating; removal of laitance; straightedging; and final surface finish.

3.06 STRAIGHTEDGING AND SURFACE CORRECTIONS

A. After floating has been completed and the excess water removed, but while the concrete is still in a plastic state, the surface of the concrete shall be tested for trueness with an accurate 10 foot straightedge. The straightedge shall be furnished by the CONTRACTOR. The straightedge shall be held in successive positions parallel to the road center line, in contact with the surface, and the whole area tested from one side of the slab to the other as necessary. any depressions shall be immediately filled with freshly mixed concrete and struck-off; consolidated and refinished. High areas shall be cut down and refinished. Straightedge testing and surface correction shall continue until the entire surface appears to conform to the required grade and cross section.

3.07 FINAL FINISH

A. As soon as the water sheen has disappeared from the surface of the pavement and just before the concrete becomes nonplastic, a light broom finish shall be given to the surface.

3.08 EDGING

A. After the final finish has been applied, but before the concrete has become nonplastic, the edges of the pavement along each side of the strip being placed, on each side of construction joints and along any structure extending into the pavement, shall be carefully rounded to a 1/4 inch radius except as otherwise indicated. A well-defined and continuous radius shall be produced and a smoother, dense mortar finish obtained. All concrete shall be completely removed from the top of the joint filler.

B. All joints shall be checked with a straightedge before the concrete has become nonplastic and, if one side of the joint is higher then the other or the entire joint is higher or lower then the adjacent slabs, corrections shall be made as necessary.

3.09 JOINTS

A. Construction Joints

1. Construction joints shall be located as shown on the Drawings and/or as directed by the ENGINEER.

B. Expansion Joints Around Structures

1. Expansion joints shall be formed by placing premolded expansion joint material about all structures and features projecting through, into or against the pavement. Unless otherwise indicated, such joints shall be 1/2 inch in width.

C. Transverse Expansion Joints

1. Open type transverse expansion joints shall be provided at all sidewalk returns and at 50 feet intervals and wherever indicated on the Drawings. Open type joints shall be formed by staking a 1/4 inch thick metal bulkhead in place and placing concrete on both sides. After the concrete has set sufficiently to preserve the width and shape of the joint, the bulkhead shall be removed. After the sidewalk has been finished over the joint, the slot shall be opened and edged with a tool having a 1/2 inch radius. Transverse expansion joints shall be cleaned and filled with joint filler strips 1/4 inch thick conforming to the requirements of AASHTO M-153.

D. Scored Joints

1. Scored joints shall be either formed or sawed at 5 foot intervals and shall extend to a depth of at least one fourth of the sidewalk slab thickness.

3.10 CURING

A. After the finishing operations have been completed and as soon as the concrete has hardened sufficiently that marring of the surface will not occur, the entire surface and the edges of the newly placed concrete shall be covered and cured with membrane curing compound.
B. Curing compound shall be uniformly applied to the surfaces to be cured, in a single coat, continuous film, at the rate of one gallon to not more than 200 square feet, by a mechanical sprayer.
C. Curing compound shall not be applied during periods of rainfall. Curing compound shall not be applied to the inside faces of joints to be sealed. Should the film become damaged from any cause within the required curing period, the damaged portions shall be repaired immediately with additional compound. Upon removal of side forms, the sides of the slabs exposed shall immediately be coated to provide a curing treatment equal to that provided for the surface.

3.11 CURB AND SIDEWALK CONSTRUCTION

A. The concrete curbs and sidewalks shall be constructed on a prepared smooth subgrade of uniform density. Large boulders and other obstructions shall be removed to a minimum depth of 6 inches below the finished subgrade elevation and the space shall be backfilled with sand, base course material or other suitable material which shall be thoroughly compacted by rolling or tamping. The CONTRACTOR shall furnish a template and shall thoroughly check the subgrade prior to depositing concrete.
B. Concrete for curbs, and sidewalks shall be formed, mixed, placed and finished in conformance with the requirements of Division 3, except as modified herein. Concrete shall be cured with a clear membrane curing compound which shall be applied at a uniform rate of one gallon per 200 square feet in accordance with the requirements specified herein. Sidewalks shall be given a light broom finish.

3.12 CURBS

A. Curbs shall be constructed in uniform sections ten feet in length except where shorter sections are necessary for closures or arcs. The sections shall be separated by sheet metal templates set perpendicular to the face and tip of the curve and not less than 2 inches longer than the depth of the curb. The templates shall be held firmly during the placing of the concrete and shall be allowed to remain in place until the concrete has set sufficiently to hold its shape, but shall be removed while the forms are still in place.

B. After the concrete has sufficiently set for a minimum of 12 hours, the CONTRACTOR shall remove the forms and backfill the spaces on each side. The earth shall be compacted in satisfactory manner without damage to the concrete Work. Minor defects shall be filled with a mortar composed of one part Portland cement and two parts fine aggregate.

3.13 PAVEMENT CURB AND SIDEWALK REPAIR

A. All damage to pavement, curb or sidewalk as a result of work under this Contract shall be repaired in a manner satisfactory to the ENGINEER and at no additional cost to the OWNER. The repair shall include all work as specified herein.

B. The width of all repairs shall extend at least 12 inches beyond the limit of the damage. The edge of the pavement curb or sidewalk to be left in place shall be cut to a true edge with a saw or other approved method so as to provide a clean edge to abut the repair. The line of the repair shall be reasonably uniform with no unnecessary irregularities.

- END OF SECTION -

SECTION 02580 - PAVEMENT MARKING AND SIGNS

PART 1 -- GENERAL

1.01 SCOPE

A. This Section consists of reflective pavement markers, traffic stripes and markings and traffic signs as specified herein, and as required for a complete installation.

1.02 SUBMITTALS

A. The CONTRACTOR shall submit Shop Drawings and other information to the CITY for review in accordance with the Section entitled “Submittals”.

1.03 QUALITY CONTROL

A. The phrase “DOT Specifications” shall refer to the Florida Department of Transportation Standard Specifications for Road and Bridge Construction. The DOT Specifications, are referred to herein and are hereby made a part of this Contract to the extent of such references, and shall be as binding upon the Contract as though reproduced herein in their entirety.

1.04 CERTIFICATION

A. The CONTRACTOR shall furnish the manufacturer’s certification that all signs furnished conform to these specifications and shall replace or repair at his expense all signs that fail to meet this requirement.

PART 2 -- PRODUCTS

2.01 PAVEMENT MARKING

A. CONTRACTOR shall replace any existing reflective pavement markers, traffic stripes and markings damaged during construction.

B. Paint for traffic stripes and markings shall be in conformance with DOT specification “Thermoplastic Traffic Stripes and Markings Paint” 711-12. The colors of the paint shall be yellow or white as existed before the repair.

C. Reflective pavement markers shall be in conformance with DOT specification Section 706-2.

2.02 TRAFFIC SIGNS

A. General: CONTRACTOR shall replace signs damaged during construction. Traffic regulating signs shall conform to the colors, dimensions and requirements of the Manual on Uniform Traffic Control Devices (ANSI).

B. Sign Panels and Support Members: Sign panels and support members shall conform to Aluminum Association Alloy 6061-T6.

C. Bolts: Bolts shall conform to Aluminum Association Alloy 2024-T4 with an anodic coating 0.0002-inches thick minimum and chromate sealed.

D. Nuts: Nuts shall conform to Aluminum Association Alloy 6269-T9.

E. Reflective Sheeting: Reflective sheeting shall conform to DOT Type A requirements.

F. Construction Warning Signs: The CONTRACTOR shall install traffic and warning signs during construction in accordance with OSHA, DOT and County requirements.

PART 3 -- EXECUTION

3.01 PAVEMENT MARKING

A. The surface which is to be painted shall be cleaned, by compressed air or other effective means, immediately before the start of painting, and shall be clean and dry when the paint is applied. Any vegetation or soil shall be removed from the pavement before edge striping is begun.

B. The traffic stripe shall be of the specified width, with clean, true edges and without sharp breaks in the alignment. A uniform coating of paint shall be obtained and the finished stripe shall contain no light spots or paint skips. Any stripes which do not have a uniform, satisfactory appearance, both day and night, shall be corrected.

C. All newly painted stripes, including edge stripes, shall be protected until the paint is sufficiently dry to permit vehicles to cross the stripe without damage from the tires. While the center line stripes are being painted, all traffic shall be routed away from the painting operations and the newly painted stripe. When necessary, a pilot car shall be used to protect the painting operations from traffic interference.

D. Any portions of the stripes damaged by passing traffic or from other cause shall be repainted at the CONTRACTOR's expense.

1. Thermoplastic Traffic Stripes and Markings: Thermoplastic pavement markings, including stripes, pavement messages, stop bars, directional arrows, reflective pavement markers and other miscellaneous items, will be replaced as existed before the repair was made. The thermoplastic compound shall be as specified in Section 711 of the D.O.T. Specifications. The thermoplastic compound shall be extruded or sprayed onto the pavement surface in a molten state by mechanical means, with surface application of glass spheres, when required, and upon cooling to ambient pavement temperature shall produce an adherent pavement marking of specified thickness and width and capable of resisting deformation.

E. The portion of the pavement surface or thermoplastic marking to which the marker is attached by the adhesive shall be cleaned of dirt, curing compound, grease, oil, moisture, loose or unsound pavement and any other material which would adversely

affect the adhesive. Reflective markers shall be installed in such a manner that the reflective face of the marker is perpendicular to a line parallel to the roadway centerline. No markers shall be installed over longitudinal or transverse joints of the pavement surface. The adhesive shall be spread on the bonding surface (not the marker) so that 100 percent of the bonding area of the marker will be covered. The adhesive application shall be of sufficient thickness so that when the marker is pressed into the adhesive, excess adhesive shall be forced out around the entire perimeter of the marker. All excessive adhesive shall be removed from in front of the reflective faces, If any adhesive or foreign matter adheres to the reflective face of the marker, the marker shall be replaced. The CITY shall determine the minimum time necessary to cure the adhesive for sufficient set to bear traffic.

F. Reflective pavement markings shall be placed at locations of fire hydrants and watermain valves as required by City standards.

3.02 SIGN FABRICATION

A. Preparation of sign blanks and fabrication of reflectorized faces shall conform to the applicable requirements of DOT Section 700-4 and 700-5.

3.03 INSTALLATION

A. Sign and supports shall be erected in conformance to DOT requirements and as specified herein.

B. All damaged signs and reflective pavement markers and traffic stripes and markings shall be replaced in conformance with this Section and DOT requirements.

- END OF SECTION -

SECTION 02581

TRAFFIC SIGNS

Part 1 - GENERAL

1.01 REQUIREMENT

A. This section consists of traffic signs as specified herein and as required for a complete installation.

1.02 SUBMITTALS

A. The CONTRACTOR shall submit shop drawings and other information to the ENGINEER for review in accordance with Section 01300, "Submittals".

1.03 CERTIFICATION

The CONTRACTOR shall furnish the manufacturer's certification that all signs furnished conform to these specifications and shall replace or repair at its expense all signs that fail to meet this requirement.

1.04 QUALITY CONTROL

A. The phrase "DOT Specifications" shall refer to the Florida Department of Transportation Standard Specifications for Road and Bridge Construction. The DOT Specifications, are referred to herein and are hereby made a part of this Contract to the extent of such references, and shall be as binding upon the Contract as though reproduced herein in their entirety.
"BCTED" shall refer to Broward County Traffic Engineering Division.

Part 2 - PRODUCTS

2.01 TRAFFIC SIGNS

A. General: Traffic regulating signs shall conform to the colors, dimensions and requirements of the Manual on Uniform Traffic Control Devices (ANSI) and displaying the lettering and symbols indicated on the Drawings.
B. Sign Panels and Support Members: Sign panels and support members shall conform to Aluminum Association Alloy 6061-T6.
C. Sign Posts: Sign posts installed east of U.S. 1 shall be hot dipped galvanized steel or aluminum.

D. Bolts: Bolts shall conform to Aluminum Association Alloy 2024-T4 with an anodic coating 0.0002-inches thick minimum and chromate sealed.
E. Nuts: Nuts shall conform to Aluminum Association Alloy 6269-T9.
F. Reflective Sheeting: Reflective sheeting shall conform to DOT Type A requirements.
G. Construction Warning Signs: The CONTRACTOR shall install traffic and warning signs during construction in accordance with OSHA, DOT and Broward County Public Works requirements.

- END OF SECTION -

SECTION 02582

RAISED RETRO-REFLECTIVE PAVEMENT
MARKERS AND BITUMINOUS ADHESIVE

Part 1 - DESCRIPTION

Place raised retroreflective pavement markers (RPMs) and adhesive, which upon installation produces a positive guidance system to supplement other reflective pavement markings.

Part 2 - MATERIALS

1) Use only Class B markers unless otherwise shown in the Plans.
2) Meet the requirements of Section 970, “Product Acceptance on the Project”, of the Florida Department of Transportation’s (FDOT) Standard Specifications for Road and Bridge Construction. Use only reflective pavement markers and bituminous adhesive that are listed on FDOT’s Qualified Products List (QPL). Provide to the Engineer a manufacturer’s certification conforming to the requirements of Section 6, which confirms that each product meets the requirements of this Section.

Part 3 - EQUIPMENT

Use equipment having either thermostatically controlled double boiler type units utilizing heat transfer oil or thermostatically controlled electric heating pots to install hot applied bituminous adhesive. Do not use direct flame melting units with flexible adhesives; however, this type of unit may be used with standard adhesive in accordance with manufacturer’s recommendations. Use a melter/applicator unit suited for both melting and pumping the adhesive through heated applicator hoses.

Heat the adhesive to between 375°F and 425ºF and apply directly to the bonding surface from the melter/applicator by either pumping or pouring. Maintain the application temperature between 375°F and 425ºF. The adhesive may be reheated. However, do not exceed the manufacturer’s recommendations for pot life at application temperatures.

Part 4 - APPLICATION

Apply RPMs to the bonding surface using bituminous adhesives only. The Engineer will conduct field testing in accordance with FM 5-566. Correct RPMs not applied in accordance with these requirements at no cost to the City.

Prior to application of adhesive, clean the portion of the bonding surface of any material which would adversely affect the adhesive.

Apply the adhesive to the bonding surface (not the marker) so that 100% of the bonding area of the marker will be covered, in accordance with adhesive manufacturer’s recommendations. Apply sufficient adhesive to ensure, that when the marker is pressed downward into the adhesive, adhesive will be forced out around the entire perimeter of the

marker.

Immediately remove excess adhesive from the bonding surface and exposed surfaces of the RPMs. Soft rags moistened with mineral spirits meeting Federal Specifications TT-T-291 or kerosene may be used to remove adhesive from exposed faces of the RPMs. Do not use any other solvent. If any adhesive, pavement marking materials or other foreign matter adheres to the reflective face of the marker, replace the marker at no cost to the City.

Install RPMs with the reflective face of the RPM perpendicular to a line parallel to the roadway centerline.

Ensure that all final RPMs are in place prior to opening the road to traffic.
If more than 2% of the RPMs fail in adhesion or alignment within the first 45 days under traffic, replace all failed markers at no expense to the City. If more than 5% of the markers fail in adhesion and or alignment during the initial 45 day period, the Engineer will extend the replacement period an additional 45 days from the date that all replacement markers have been installed. If, at the end of the additional 45 day period, more than 2% of all markers (initial installation and 45 day replacements combined) fail in adhesion or alignment, replace all failed markers at no expense to the City.

CONTRACTOR’S RESPONSIBILITY FOR NOTIFICATION.

Notify the Engineer prior to the placement of RPMs. At the time of notification, indicate the manufacturer and the LOT numbers of RPMs and bituminous adhesive that are intended for use. Verify that the approved LOT numbers appear on the material packages. Furnish a test report to the Engineer certifying that the materials meet all requirements specified.

METHOD OF MEASUREMENT

The quantities to be paid for will be the number of RPMs, furnished and installed, completed and accepted.

- END OF SECTION -

SECTION 02752

TELEVISION SURVEY

PART 1 -- GENERAL

1.01 SCOPE

A. The work consists of furnishing all labor, materials, accessories, equipment, tools, transportation, services and technical competence for performing all operations required to execute the internal closed circuit television survey to inspect the entire barrel of sewers up to 48 inches in diameter.

B. The survey shall show all defects and determine amount of infiltration entering the sewer system.

1.02 GENERAL

A. After cleaning involving the mechanical removal of roots, grease, and/or tuberculation where authorized), and before and after rehabilitation work, the pipe sections shall be visually surveyed by means of closed-circuit television in the presence of the OWNER. The survey shall be performed one manhole-to-manhole section at a time and the flow in the section being surveyed shall be suitably controlled as described in Section 02750 - Wastewater Flow Control.

B. Pre- and post-construction survey video on CD-ROM shall be delivered to the OWNER on a “one line per CD-ROM” basis, accompanied with the corresponding work order, and pre- and post-TV log, for each sewer line surveyed. The video on CD-ROM shall be direct from a live video source into a video file, format MPEG1, and of good quality for viewing. Video tapes shall not be accepted.

C. The television equipment operator shall be certified under the NASSCO (National Association of Sewer Survey Companies) PACP (Pipe Line Assessment and Certification Program).

1.03 EQUIPMENT

A. The television camera used for the survey shall be one specifically designed and constructed for such survey and shall be of the pan and tilt type. Lighting for the camera shall be suitable to allow a clear picture of the entire periphery of the pipe. The camera shall be operative in 100% humidity conditions. The camera, television monitor, and other components of the video system shall be capable of producing a minimum 700 line resolution color video picture. The CONTRACTOR shall maintain camera in clear focus at all times. Picture quality and definition shall be to the satisfaction of the OWNER; and if unsatisfactory, equipment shall be removed and replaced with adequate equipment at no additional cost to the OWNER.

B. The video camera shall include a titler feature capable of showing on the tape the following information:

1. City and State

2. Date/Time

3. CONTRACTOR's Name

4. Line Size, Material, and Depth

5. Manhole Identification (both manholes)

6. On-going Footage Counter

1.04 SUBMITTALS

A. The CONTRACTOR shall submit shop drawings and other information in accordance with Section 01300 - Submittals. The CONTRACTOR's submittals shall include description of the software to be used and a sample of the video titles to be used, along with a sample of the television survey log to be used.

PART 2 -- PRODUCTS

All inspection information and data (including video) written to digital media (CD-ROM).

PART 3 -- EXECUTION

3.01 PRECONSTRUCTION SURVEY

A. Procedure

1. Prior to any repair work, the entire sewer line (from manhole to manhole) shall be televised. The camera shall be placed at the center of the manhole and videotaping shall commence prior to entering the pipe. The CONTRACTOR shall show the inside of the manhole walls and the pipe connection to the wall at both the upstream and downstream manhole.

2. The camera shall be moved through the line in either direction at a moderate rate, stopping when necessary to permit proper documentation of the sewer's condition. In no case shall the television camera be pulled at a speed greater than 30 feet per minute. Manual winches, power winches, TV cable, powered rewinds and tractors or other devices that do not obstruct the camera view or interfere with proper documentation of the sewer conditions shall be used to move the camera through the sewer line. If the camera is being pulled through the sewer line by a hydraulic cleaning unit hose the cleaning nozzle shall be located a minimum of eight (8) feet away from the camera to allow a clear, unobstructed view. Jet nozzle shall be used in front of camera while televising through a dip to draft out water. If, during the survey operation, the television camera will not pass through the entire manhole section, the CONTRACTOR shall set up his equipment so that the survey can be performed from the opposite manhole.

3. Whenever non-remote powered and controlled winches are used to pull the television camera through the line, telephones or other suitable means of

communication shall be set up between the two manholes of the section being surveyed to insure good communications between members of the crew.

4. Measurement for location of defects shall be above ground by means of a meter device. Marking on the cable, or the like, which would require interpolation for depth of manhole, will not be allowed. Measurement meters shall be accurate to tenths of a foot over the length of the section being surveyed. Accuracy of the distance meter shall be checked by use of a walking meter, roll-a-tape, electronic distance meter or other suitable device. Manhole numbers and linear footage shall be shown on screen during taping.

5. Movement of the television camera shall be temporarily halted for a minimum of ten seconds at each visible point source of infiltration and/or inflow until the leakage rate from that source is quantified. The camera shall be stopped at all service connections and the service lateral shall be inspected with the pan and tilt camera. The camera shall also be stopped at active service connections where flow is discharging. If the discharge persists, the property involved shall be checked to determine whether or not the discharge is sewage. If no flows are being discharged from the building, it shall be considered that the observed flow is infiltration/inflow.

B. Field Documentation

1. Television Inspection Forms (Survey Logs). Printed and electronically stored location records shall be kept by the CONTRACTOR and will clearly show the location in relation to an adjacent manhole of each infiltration point observed during survey. Upstream footage at face of manhole (0) and downstream footage at face of manhole (e.g., 250) shall be shown on the log. The television inspection forms to be utilized by the CONTRACTOR shall be those mandated by NASSCO's PACP. Both the "Header" and "Details" information of the form shall be entered as indicated in the PACP standards. The survey logs shall include, but not be limited to the following information:

   a. Correct pipe segment/manhole numbers

   b. Correct address of manhole location

   c. Pipe size, length and material

   d. Manhole depth (up and downstream)

   e. UAZ (Utilities Analysis Zone) number

   f. Lift station service area number

   g. CD number and index

   h. Footage locations, descriptions and estimated leak rates for visible point sources of infiltration inflow

   i. Footage locations and descriptions of structural defects such as obstructions, any remaining root intrusion, offset joints, cracked pipe,

fractured pipe, holes, collapses, sags, protruding service connections and/or blockages in the pipe.

The terminology to be used shall follow NASSCO's PACP standards. All information will be recorded and a copy of such electronic records and a hard copy will be supplied to the OWNER.

2. Photographs. Digital photographs of the television picture of problems shall be taken by the CONTRACTOR upon request of the OWNER.

3. Video Recordings. The purpose of video (CD-ROM) recording shall be to supply a visual and audio record of problem areas of the lines that may be replayed. CD-ROM recording playback shall be at the same speed that it was recorded. Slow motion or stop motion playback features shall be supplied by the CONTRACTOR. Once recorded, the CD-ROM becomes property of the OWNER. The CONTRACTOR shall have all CD-ROM and necessary playback equipment readily accessible for review by the OWNER during the Project.

   The observation terminology utilized during audio narration shall be consistent with NASSCO's PACP standards. The television inspection shall be video recorded on high quality CD-W. The CD shall be clearly labeled with the lift station number and individual manhole numbers clearly listed. The CDs are to be furnished to the OWNER with a printed hard copy (Survey Logs) and electronic data inspection report.

   Video CDs displaying poor video quality will be deemed unacceptable and no payments will be made until lines are retelevised and a new CD is submitted. Poor video quality refers to, but is not limited to, the following: grease or debris on the lens, camera under water, picture too dark, excessive camera speed through the line, lines improperly cleaned, poor/no audio, etc.

4. Audio. All CD-ROM shall have audio record. As a preamble, at the beginning of the CD-ROM, the CONTRACTOR shall state the following: "(Contractor's Name) is performing a pre/post TV survey for Job No. _____ (provided by the OWNER), City of Hollywood". State date, time, operator's name, area, upstream manhole number to downstream manhole number, pipe size and material, upstream manhole depth, and TV survey will be from up- to downstream, or down- to upstream. The CONTRACTOR shall verbally state station and position of all laterals and defects. At the end of each line, state: "End of line", upstream manhole number to downstream manhole number, and total linear footage.

3.02 POST CONSTRUCTION SURVEY

A. Procedure

1. The same procedures shall be used as indicated in Section 3.01 PRECONSTRUCTION SURVEY.

2. In addition, the CONTRACTOR shall stop camera at all point repairs, sectional repairs, and reinstated laterals, and inspect entire repaired pipe section.

3. The CONTRACTOR shall invert white foreground to black as needed in the line section with light background.

4. In the case of a post-liner survey, the CONTRACTOR shall fully televise both ends of the liner at the manhole so that the fit of the liner to the host pipe can be evaluated. At the conclusion of a television survey for a given liner, the CONTRACTOR shall physically turn the camera around to film the liner end, so that the camera is facing back in the direction it just traversed, to ensure an adequate and complete picture.

5. The post-liner television survey shall be done within 2 weeks of liner installation.

B. Documentation

1. The same documentation shall be provided as indicated in Section 3.01 PRECONSTRUCTION SURVEY.

- END OF SECTION -

SECTION 02757 - POINT REPAIR OF SANITARY SEWERS

PART 1 -- GENERAL

1.01 SCOPE

A. The work specified in this Section includes repairs to sections or segments (up to 15 feet) of existing sanitary sewers, mains or service lines, which require excavation from the surface to accurately locate sources of infiltration or inflow and to eliminate them by making necessary repairs.

1.02 GENERAL

A. Reference is made to Division 15, ”Mechanical”. Methods, procedures and requirements are similar when sections of existing pipe have been crushed, cracked, or settled, or have holes in them and are to be replaced with new pipe. Generally, point repairs are made at specific locations and involve relatively short lengths of sewer or fittings (up to 15 feet) which are to be repaired or replaced. "Isolation" of affected reaches of sewer by plugging and/or bypass pumping, if required, shall be performed as specified in Section 02750 - Wastewater Flow Control.

B. Locations where point repairs are to be made will be made available to the CONTRACTOR through Work Orders and will be based on previously performed smoke tests and television surveys. It is understood that the exact location of pipe leaks and failures cannot always be determined before the pipe is exposed because the smoke injected into the existing pipe to detect their presence can migrate through passages in the earth, and overburden, and may not emerge directly over the leak or failure.

C. It is also understood that the smoke testing and closed circuit television surveys performed by others prior to the commencement of this project cannot always determine the precise cause of leakage or failure. The pipe shall be exposed and the source located, examined and evaluated before repairs are made. Additional smoke shall be introduced into the pipe by the CONTRACTOR to aid in the final evaluation and determination of required work if necessary to locate the area to be repaired.

D. After the designated repairs have been made, the CONTRACTOR will test them as described in this Section of these Specifications. The costs of testing will be borne by the CONTRACTOR. If a repaired joint or section should prove to be defective, the CONTRACTOR shall re-perform the work at no additional cost to the OWNER and shall also be responsible for the costs of any retesting required by the OWNER.

E. Where work is to be performed on private property, the CONTRACTOR shall consult with the OWNER who will make arrangements and schedules with the property owners before the CONTRACTOR performs the work.

F. Excavation, backfill, exploratory excavation, sheeting and shoring, dewatering, conflicts with other utilities, and miscellaneous work shall conform to the requirements of Section 02222 - Excavation and Backfill for Utilities.

1.03 SUBMITTALS

A. The CONTRACTOR shall submit shop drawings in accordance with Section 01300 - Submittals.

1.04 QUALIFICATIONS

A. The Qualifications of the CONTRACTOR shall be submitted prior to contract award. These Qualifications shall include detailed descriptions of the following:

1. Name, business address and telephone number of the CONTRACTOR.

2. Name(s) of all supervisory personnel to be directly involved with this project.

3. The CONTRACTOR shall sign and date the information provided and certify that to the extent of his knowledge, the information is true and accurate, and that the supervisory personnel will be directly involved with and used on this project. Substitutions of personnel and/or methods will not be allowed without written authorization of the OWNER.

4. The CONTRACTOR shall provide his references of previous project lists going back five years including his customers' names, addresses, and telephone numbers.

5. To be qualified, the CONTRACTOR shall have a minimum of five years previous experience in the work required in this section.

PART 2 -- PRODUCTS

2.01 MATERIALS

A. Pipe materials are specified in Division 15, "Mechanical".

PART 3 -- EXECUTION

3.01 PROCEDURES

A. The point repair procedures shall be as follows:

1. Site preparation shall be performed as described in Division 2. When the repairs are to be made on sewers or facilities lying under paved surfaces, those surfaces shall be removed to the limits specified for point repairs of the particular size pipe involved (trench width plus two feet for concrete surfaces) unless otherwise acceptable to the OWNER.

2. The CONTRACTOR shall excavate and backfill in accordance with Section 02222 - Excavation and Backfill for Utilities. Under no circumstances shall the CONTRACTOR be allowed to remove concrete or asphalt without prior cutting. The saw cutting shall be deep enough to produce an even, straight cut.

3. Dewater, sheet and or brace all excavations in accordance with Section 02222 - Excavation and Backfill for Utilities. Well points, pumps, sheeting, bracing and/or sock drain shall be used to provide a safe, dry, open hole for all repairs or replacements specified herein.

4. Excavate down to the pipe, completely exposing the pipe up to the next undamaged section of pipe on each side.

5. Locate the leak to be repaired.

6. After the leak or failure is located and exposed, the OWNER will identify the method of rehabilitation. One or a combination of the following methods shall be used:

   a. Remove and replace section(s) of pipe or fitting. Remove section(s) of defective pipe or fitting by cutting on each side along lines perpendicular to longitudinal axis of pipe so as to leave "spigot ends" to be connected to replacement pipe. Cut or fabricate replacement section. Make connections using stainless steel shear rings as manufactured by Fernco, or approved equal. Bedding or embedment shall be placed and compacted. Reconnect to service line if required. As a minimum, a total of six (6) feet of piping shall be replaced by the CONTRACTOR.

      In the case of point repairs performed on service laterals, the CONTRACTOR shall:

      i. Determine the exact location of the repair by means of television inspection with an electronic locating device (sonde).

      ii. If roots are encountered inside the lateral being repaired, a minimum of 15 feet of lateral shall be replaced.

      iii. If the pipe being replaced reaches the private property line, a cleanout shall be installed at that location in both back yard and front yard easements.

      iv. Where the OWNER has indicated a fused-on saddle, sewer service connections shall be joined to the fold-and-formed pipe by means of an electrofusion sewer saddle as manufactured by Central Plastics Company, 1901 W. Independence, Shawnee, OK 74801, (405) 273-6302, or approved equal. The installation of the saddle shall be done in accordance with manufacturer's recommended procedures. The outlet shall be gasketed, sized for ASTM D 3034 SDR 35 PVD pipe. The fusion of the saddle base must be achieved by input of 40 volts of current supplied by a micro-processor manufactured by Central Plastics Company, or approved equal. The CONTRACTOR must receive training by the manufacturer before installing saddle.

   b. Cement-stabilized sand shall be used to supplement the embedment or backfill when accepted by the OWNER. This shall consist of two sacks of cement per cubic yard of sand thoroughly mixed. Only a sufficient amount of water shall be added to assure setting-up of the cement. These mixes shall be made before placing in the trench and only enough shall be prepared to allow placing, shaping and tamping before an initial set has taken place. Cement-stabilized sand shall be used for repairs in FDOT paved right of ways.

7. The adequacy of point repairs in sewer mains shall be demonstrated by the CONTRACTOR by testing. For service lines, visual review and acceptance by the OWNER will be deemed sufficient. Testing of mains may be accomplished by one of two alternate methods, depending on the depth of the line and the difference in

elevation of the pipe at the ends of the reach. Smoke testing shall be used if the pipe slope exceeds one percent. Testing shall be performed while dewatering is continued and before backfilling.

a. Smoke-Testing. The reach of sewer in which the repair (or repairs) has been made shall be isolated by plugging the upstream and downstream manholes as necessary not only to temporarily eliminate the flow of sewage through it but also to prohibit the smoke from entering other reaches of sewer. Smoke shall then be introduced into one of the manholes and into the reach using smoke bombs and a blower especially designed or adapted for smoke testing sanitary sewers and acceptable to the OWNER. The repaired area shall then be observed for the emergence of smoke for a period of 15 minutes. If none can be seen, the repair will be deemed to have passed the test.

b. Exfiltration-Testing: This method may be used only on sewers laid on grades less than 1.00 percent. Water, colored with a bright-colored dye acceptable for usage in testing, is introduced into the pipe so as to impose a 2-foot static head over the top of the pipe at the point of repair when the pipe in the lower manhole is plugged. Observations shall then be made by the OWNER to determine if leakage of the colored water occurs at the repair point. Care shall be taken, when this method is used, that:

i. Not more than 4-feet of static head are induced on the main at the lower end of the reach, and

ii. No back-up problems are caused in service lines.

8. Complete placement and compaction of backfill.

9. Restore surface features to at least as good condition as existed before construction began, including roadways, driveways and walks.

3.02 TELEVISION SURVEY

A. Television survey, including Preconstruction Survey and Post Construction Survey as indicated in Section 02752 - Television Survey, is required for all point repairs of sanitary sewers.

- END OF SECTION -

SECTION 02930

SODDING

Part 1 - GENERAL

1.01 SCOPE

A. Provide all labor, materials and equipment necessary for the installation of new sodding, or complete sodding of existing grassed areas that may have been damaged or disturbed by CONTRACTOR activities. This shall include, but not be limited to: fertilizing, sodding, tests and all incidentals to make the work complete.

1.02 RELATED WORK SPECIFIED ELSEWHERE

A. Section 02500 - Landscaping
B. Section 02210 - Earth Excavation, Backfill, Fill and Grading
C. Section 02260 - Finish Grading

1.03 WORK INCLUDED

A. Testing of topsoil.
B. Raking and leveling topsoil as required for sodding.
C. Liming and fertilizing of topsoil.
D. Laying and rolling of sod.
E. Maintaining

1.04 SUBMITTALS

A. Submit product source and information sheets in accordance with Section 01300, “Submittals”.

Part 2 - PRODUCTS

2.01 MATERIALS

A. Fertilizer

1. Fertilizer shall be commercial fertilizer, as manufactured by International Chemical Company or equal.
2. Said fertilizer shall have a 10-20-6 N.P.K. content and contain a minimum of 60% of organic material.
3. It shall be delivered at the site in the original sealed containers.

B. Sod

1. Sod from right-of-way swales within the work area shall be Bahia sod or replaced in-kind, whichever is finer quality.
2. Sod shall be first quality Bahia sod of firm texture having a compacted growth and good root development.
3. Sod shall be absolutely true to varietal type, live, fresh and free from weeds or objectionable vegetation, fungus, insects and disease of any kind. Sod shall be kept moist from the time it is field cut until it is laid at the proposed site.
4. The sod shall be as grown by a certified turf nursery and CONTRACTOR shall inform ENGINEER as to the source of the sod to be utilized prior to ordering and delivery of sod.
5. Sod shall be furnished and installed in rectangular sod strips measuring 12 to 16-inches in width of standard lengths of not less than 2 feet and delivered on pallets.

Part 3 - EXECUTION

3.01 INSTALLATION

A. Sod shall be placed on all grassed areas disturbed by construction activities, unless otherwise indicated on the Drawings. Sodding shall be in accordance with these specifications and Sections 575 and 981 of FDOT Specifications, whichever is more stringent.

B. Lawn areas damaged by CONTRACTOR's operations shall be repaired at once by proper sod bed preparation, fertilization and re-sodding, in accordance with these specifications. Regardless of the condition of the lawn area (weed content etc.) prior to the CONTRACTOR working in the area, all repairs shall be made with sod.

A. These areas shall be fine graded to achieve the finished subgrade after compaction which shall be obtained by rolling, dragging or by an approved method which obtains an equivalent compaction to that produced by a hand roller weighing from 75 to 100 pounds per foot of width. All depressions caused by settlement or rolling shall be filled with additional existing or furnished topsoil and re-graded and prepared as specified above until it presents a reasonably smooth and even finish at the required sod sub-grade.

B. All sod furnished shall be living sod containing at least 70% of thickly matter grasses as specified and free from noxious weeds. All sod shall be certified free of fire ants.

C. No broken pads or torn or uneven ends will be accepted. Standard size sections of sod shall be strong enough to support own weight and retain their size and shape when suspended vertically with a firm grasp on the upper 10%

of the section. Sod shall not be harvested when its moisture content (excessively wet or dry) may adversely affect its survival.

D. Sod shall be harvested, delivered, and installed within a period of 24 hours. Sod not installed within this time period shall be subject to inspection and rejection by ENGINEER, and shall be removed from the site and a fresh sod supply shall be furnished at no extra cost to CITY.
E. The topsoil shall not be moist at time of installation; however, it shall contain sufficient moisture so as not be powdery or dusty, both as determined by the supplier's representative.
F. The overlapping of existing lawn with new sod along limit of work lines will not be permitted. Sod shall be laid in strips, edge to edge, with the lateral joints staggered. All minor or unavoidable openings in the sod shall be closed with sod plugs or with topsoil, as directed by ENGINEER. However, sod laid with joints determined to be too large shall be lifted and re-laid as specified herein at no extra cost to CITY.
G. Immediately after the sod is laid, the sod shall be watered thoroughly by hand or mechanical sprinkling until the sod and at least 2-inch of the top soil bed have been thoroughly moistened.
H. Sufficient watering shall be done by the CONTRACTOR to maintain adequate moisture for optimum development of the sodded areas. Sodded areas shall receive no less than 1.5 inches of water per week.
I. CONTRACTOR shall be responsible to furnish his own supply of water to the site at no extra cost. If possible, CITY shall furnish CONTRACTOR, upon request, with a source and supply of water. CONTRACTOR shall apply for temporary meter and pay CITY for water used at current utility billing rates. However, if CITY’s water supply is not available or not functioning, CONTRACTOR shall be responsible to furnish adequate supplies at his own cost. All work injured or damaged due to the lack of, or the use of too much water, shall be CONTRACTOR's responsibility to correct.

5.02 MAINTENANCE

A. Maintain the entire sodded areas at least a 30-day period or until final acceptance at the completion of the Contract, whichever is longer. Maintenance shall include watering as specified, weeding and removal of stones which may appear. All bare or dead spots which become apparent shall be properly prepared, limed and fertilized, and re-sodded at CONTRACTOR's expense as many times as necessary to secure a good growth. In the event that the sod installation is not accepted by ENGINEER, the entire area shall be maintained and cut by CONTRACTOR until final acceptance of the sod installation.

B. Take whatever measures are necessary to protect the sod while it is developing. These measures shall include furnishing of warning signs, barriers, or any other necessary measures of protection.

- END OF SECTION -

SECTION 03290

JOINTS IN CONCRETE

PART 1 -- GENERAL

1.01 THE REQUIREMENT

A. The CONTRACTOR shall construct all joints in concrete at the locations shown. Joints required in concrete structures are of various types and will be permitted only where shown, unless specifically accepted by the ENGINEER.

1.02 REFERENCE SPECIFICATIONS, CODES, AND STANDARDS

A. Federal Specifications:

TT-S-0227E(3)	Sealing Compound, elastomeric type, Multi-component for Calking, Sealing, and Glazing Buildings and Other Structures).

B. U.S. Army Corps of Engineers Specifications:

CRD-C572	PVC Waterstop.

C. Commercial Standards:

ASTM A 775	Specification for Epoxy-Coated Reinforcing Steel Bars
ASTM C 920	Specification for Elastomeric Joint Sealants
ASTM D 412	Test Methods for Rubber Properties in Tension
ASTM D 624	Test Method for Rubber Property -- Tear Resistance
ASTM D 638	Test Method for Tensile Properties of Plastics
ASTM D 746	Test Method for Brittleness Temperature of Plastics and Elastomers by Impact
ASTM D 747	Test Method for Apparent Bending Modulus of Plastics by Means of a Cantilever Beam
ASTM D 1056	Specification for Flexible Cellular Materials -- Sponge or Expanded Rubber
ASTM D 1752	Specification for Preformed Sponge Rubber and Cork Expansion Joint Fillers for Concrete Paving and Structural Construction

ASTM D 2240	Test Method for Rubber Property -- Durometer Hardness
ASTM D 2241	Specification for Poly (Vinyl Chloride) (PVC) Pressure-Rated Pipe (SDR-Series)

1.03 TYPES OF JOINTS

A. Construction Joints: When fresh concrete is placed against a hardened concrete surface, the joint between the two pours is called a construction joint. Unless otherwise specified, all joints in water bearing members shall be provided with a waterstop and/or sealant groove of the shape specified and shown. The surface of the first pour may also be required to receive a coating of bond breaker as shown.

B. Contraction Joints: Contraction joints are similar to construction joints except that the fresh concrete shall not bond to the hardened surface of the first pour, which shall be coated with a bond breaker. The slab reinforcement shall be stopped 4-1/2 inches from the joint; which is provided with a sleeve-type dowel, to allow shrinkage of the concrete of the second pour. Waterstop and/or sealant groove shall also be provided when specified or shown.

C. Expansion Joints: To allow the concrete to expand freely, a space is provided between the two pours, the joint shall be formed as shown. This space is obtained by placing a filler joint material against the first pour, which acts as a form for the second pour. Unless otherwise specified, all expansion joints in water bearing members shall be provided with a center-bulb type waterstop as shown.

D. Premolded expansion joint material shall be installed with the edge at the indicated distance below or back from finished concrete surface, and shall have a slightly tapered, dressed, and oiled wood strip secured to or placed at the edge thereof during concrete placement, which shall later be removed to form space for sealing material. The spaces formed shall be filled with a joint sealant as specified.

E. The space so formed shall be filled with a joint sealant material as specified in the Paragraph in Part 2 entitled "Joint Sealant." In order to keep the two wall or slab elements in line the joint shall also be provided with a sleeve-type dowel as shown.

F. Control Joint (Weakened Plane): The function of the control joint is to provide a weaker plane in the concrete, where shrinkage cracks will probably occur. A groove, of the shape and dimensions shown, is formed or saw-cut in the concrete. This groove is afterward filled with a joint sealant material as specified in the Paragraph in Part 2 entitled "Joint Sealant."

G. All other Joints, bearing devices, and elastomeric bearing pads for bridge structures shall comply with CSS Section 51.

1.04 CONTRACTOR SUBMITTALS

A. Waterstops: Prior to production of the material required under this contract, qualification samples shall be submitted. Such samples shall consist of extruded or molded sections of each size or shape to be used, and shall be accomplished so that the material and

workmanship represents in all respects the material to be furnished under this contract. The balance of the material to be used under this contract shall not be produced until after the ENGINEER has reviewed the qualification samples.

B. Joint Sealant: Prior to ordering the sealant material, the CONTRACTOR shall submit to the ENGINEER for the ENGINEER's review, sufficient data to show general compliance with the requirements of the Contract Documents. Certified test reports from the sealant manufacturer on the actual batch of material being supplied indicating compliance with the above requirements shall be furnished the ENGINEER before the sealant is used on the job.

C. Shipping Certification: The CONTRACTOR shall provide written certification from the manufacturer as an integral part of the shipping form, to show that all of the material shipped to this project meets or exceeds the physical property requirements of the Contract Documents. Supplier certificates are not acceptable.

D. Joint Location: The CONTRACTOR shall submit placement shop drawings showing the location and type of all joints for each structure.

1.05 QUALITY ASSURANCE

A. Waterstop manufacturer shall demonstrate five years (minimum) continuous, successful experience in production of waterstops.

B. Waterstop Inspection: It is required that all waterstop field joints shall be subject to rigid inspection, and no such work shall be scheduled or started without having made prior arrangements with the ENGINEER to provide for the required inspections. Not less than 24 hours notice shall be provided to the ENGINEER for scheduling such inspections.

C. All field joints in waterstops shall be subject to rigid inspection for misalignment, bubbles, inadequate bond, porosity, cracks, offsets, and other defects which would reduce the potential resistance of the material to water pressure at any point. All defective joints shall be replaced with material which shall pass said inspection, and all faulty material shall be removed from the site and disposed of by the CONTRACTOR at its own expense.

D. The following waterstop defects represent a partial list of defects which shall be grounds for rejection:

1. Offsets at joints greater than 1/16-inch or 15 percent of material thickness, at any point, whichever is less.

2. Exterior crack at joint, due to incomplete bond, which is deeper than 1/16-inch or 15 percent of material thickness, at any point, whichever is less.

3. Any combination of offset or exterior crack which will result in a net reduction in the cross section of the waterstop in excess of 1/16-inch or 15 percent of material thickness at any point, whichever is less.

4. Misalignment of joint which result in misalignment of the waterstop in excess of 1/2-

inch in 10 feet.

5. Porosity in the welded joint as evidenced by visual inspection.

6. Bubbles or inadequate bonding which can be detected with a penknife test. (If, while prodding the entire joint with the point of a pen knife, the knife breaks through the outer portion of the weld into a bubble, the joint shall be considered defective.)

E. Waterstop Samples: Prior to use of the waterstop material in the field, a sample of a fabricated mitered cross and a tee constructed of each size or shape of material to be used shall be submitted to the ENGINEER for review. These samples shall be fabricated so that the material and workmanship represent in all respects the fittings to be furnished under this contract. Field samples of fabricated fittings (crosses, tees, etc.) will be selected at random by the ENGINEER for testing by a laboratory at the OWNER's expense. When tested, they shall have a tensile strength across the joints equal to at least 600 psi.

F. Construction Joint Sealant: The CONTRACTOR shall prepare adhesion and cohesion test specimens as specified herein, at intervals of 5 working days while sealants are being installed.

G. The sealant material shall show no signs of adhesive or cohesive failure when tested in accordance with the following procedure in laboratory and field tests:

1. Sealant specimen shall be prepared between 2 concrete blocks (1-inch by 2-inch by 3-inch). Spacing between the blocks shall be 1-inch. Coated spacers (2-inch by 1-1/2-inch by 1/2-inch) shall be used to insure sealant cross-sections of 1/2-inch by 2 inches with a width of 1-inch.

2. Sealant shall be cast and cured according to manufacturer's recommendations except that curing period shall be not less than 24 hours.

3. Following curing period, the gap between blocks shall be widened to 1-1/2-inch. Spacers shall be used to maintain this gap for 24 hours prior to inspection for failure.

H. Store waterstops under tarps to protect from oil, dirt, and sunlight.

1.06 GUARANTEE

A. The CONTRACTOR shall provide a 5-year written guarantee of the entire sealant installation against faulty and/or incompatible materials and workmanship, together with a statement that it agrees to repair or replace, to the satisfaction of the OWNER, at no additional cost to the OWNER, any such defective areas which become evident within said 5-year guarantee period.

PART 2 -- PRODUCTS

2.01 PVC WATERSTOPS

A. General: Waterstops shall be extruded from an elastomeric polyvinyl chloride compound

containing the plasticizers, resins, stabilizers, and other materials necessary to meet the requirements of these Specifications. No reclaimed or scrap material shall be used. The CONTRACTOR shall obtain from the waterstop manufacturer and shall furnish to the ENGINEER for review, current test reports and a written certification of the manufacturer that the material to be shipped to the job meets the physical requirements as outlined in the U.S. Army Corps of Engineers Specification CRD-C572 and those listed herein.

B. Flatstrip and Center-Bulb Waterstops: Flatstrip and center-bulb waterstops shall be as detailed and as manufactured by: Esterline/Kirkhill Rubber Co., Brea, California; Water Seals, Inc., Chicago, Illinois; Progress Unlimited, Inc., New York, New York; Greenstreak Plastic Products Co., St. Louis, Missouri; or equal; provided, that at no place shall the thickness of flat strip waterstops, including the center bulb type, be less than 3/8-inch.

C. Multi-Rib Waterstops: Multi-rib waterstops, where required, shall be as detailed and as manufactured by Water Seals, Inc., Chicago, Illinois; Progress Unlimited, Inc., New York, New York; Greenstreak Plastic Products Co., St. Louis, Missouri; or equal. Prefabricated joint fittings shall be used at all intersections of the ribbed-type waterstops.

D. Other Types of Waterstops: When other types of waterstops, not listed above are required and shown, they shall be subjected to the same requirements as those listed herein.

E. Waterstop Testing Requirements: When tested in accordance with the specified test standards, the waterstop material shall meet or exceed the following requirements:

Physical Property, Sheet Material	Value	ASTM Std.
Tensile Strength-min (psi)	1750	D 638, Type IV
Ultimate Elongation-min (percent)	350	D 638, Type IV
Low Temp Brittleness-max (degrees F)	-35	D 746
Stiffness in Flexure-min (psi)	400	D 747
Accelerated Extraction (CRD-C572)		
Tensile Strength-min (psi)	1500	D 638, Type IV
Ultimate Elongation-min (percent)	300	D 638, Type IV
Effect of Alkalies (CRD-C572)		
Change in Weight (percent)	+0.25/-0.10	-------
Change in Durometer, Shore A	+5	D 2240
Finish Waterstop		
Tensile Strength-min (psi)	1400	D 638, Type IV
Ultimate Elongation-min (percent)	280	D 638, Type IV

2.02 JOINT SEALANT

A. Joint sealant shall be polyurethane polymer designed for bonding to concrete which is

continuously submerged in water. No material will be acceptable which has an unsatisfactory history as to bond or durability when used in the joints of water retaining structures.

B. Joint sealant material shall meet the following requirements (73 degrees F and 50 percent R.H.):

Work Life	45 - 90 minutes
Time to Reach 20 Shore "A" Hardness (at 77 degrees F, 200 gr quantity)	24 hours, maximum
Ultimate Hardness (ASTM D 2240)	30 - 40 Shore "A"
Tensile Strength (ASTM D 412)	250 psi, minimum
Ultimate Elongation (ASTM D 412)	400 percent, minimum
Tear Resistance (Die C ASTM D 624)	75 pounds per inch of thickness, minimum
Color	Light Gray

C. All polyurethane sealants for waterstop joints in concrete shall conform to the following requirements:

1. Sealant shall be 2-part polyurethane with the physical properties of the cured sealant conforming to or exceeding the requirements of ANSI/ASTM C 920 or Federal Specification TT-S-0227 E(3) for 2-part material, as applicable.

2. For vertical joints and overhead horizontal joints, only "non-sag" compounds shall be used; all such compounds shall conform to the requirements of ANSI/ASTM C 920 Class 25, Grade NS, or Federal Specification TT-S-0227 E(3), Type II, Class A.

3. For plane horizontal joints, the self-leveling compounds which meet the requirements of ANSI/ASTM C 920 Class 25, Grade P, or Federal Specification TT-S-0227 E(3), Type I shall be used. For joints subject to either pedestrian or vehicular traffic, a compound providing non-tracking characteristics, and having a Shore "A" hardness range of 35 to 45, shall be used.

4. Primer materials, if recommended by the sealant manufacturer, shall conform to the printed recommendations of the sealant manufacturer.

D. All sealants, wherever shown, or required hereunder shall be PSI-270 as manufactured by Polymeric Systems Inc.; Elastothane 227R as manufactured by Pacific Polymers; Sikaflex 2C, as manufactured by Sika Corporation; or equal.

E. Sealants for non-waterstop joints in concrete shall conform to the requirements of Section 07920, "Sealants and Calking."

2.03 JOINT MATERIALS

A. Bearing Pad: Bearing pad to be neoprene conforming to ASTM D 2000 BC 420, 40 durometer hardness unless otherwise noted.

B. Neoprene Sponge: Sponge to be neoprene, closed-cell, expanded, conforming to ASTM D 1056, type 2C3-E1.

C. Joint Filler:

1. Joint filler for expansion joints in waterholding structures shall be neoprene conforming to ASTM D1056, type 2C5-E1.

2. Joint filler material in other locations shall be of the preformed non-extruding type joint filler constructed of cellular neoprene sponge rubber or polyurethane of firm texture. Bituminous fiber type will not be permitted. All non-extruding and resilient-type preformed expansion joint fillers shall conform to the requirements and tests set forth in ASTM D 1752 for Type I, except as otherwise specified herein.

2.04 PREFORMED JOINT FILLER

A. Preformed joint filler material shall be of the preformed non-extruding type joint filler constructed of cellular neoprene sponge rubber or polyurethane of firm texture. Bituminous fiber type will not be permitted. All non-extruding and resilient-type preformed expansion joint fillers shall conform to the requirements and tests set forth in ASTM D 1752 for Type I, except as otherwise specified herein.

B. Unless otherwise noted, preformed joint filler shall be a non-extruding, resilient, bituminous type conforming to the requirements of ASTM D 1751.

2.05 BACKING ROD

A. Backing rod shall be an extruded closed-cell, polyethylene foam rod. The material shall be compatible with the joint sealant material used and shall have a tensile strength of not less than 40 psi and a compression deflection of approximately 25 percent at 8 psi. The rod shall be 1/8-inch larger in diameter than the joint width except that a one-inch diameter rod shall be used for a 3/4-inch wide joint.

2.06 BOND BREAKER

A. Bond breaker shall be Super Bond Breaker as manufactured by Burke Company, San Mateo, California; Select Cure CRB as manufactured by Select Products Co., Upland, California; or equal. It shall contain a fugitive dye so that areas of application will be readily distinguishable.

2.07 BENTONITE WATERSTOP

A. Where called for in the Contract Documents, bentonite type waterstop, which shall expand in the presence of water to form a watertight joint seal without damaging the concrete in

which it is cast, shall be provided.

B. The bentonite waterstop shall be composed of 75 percent bentonite. The balance of the material shall be butyl rubber-hydrocarbon with less than 1.0 percent volatile matter. The waterstop shall contain no asbestos fibers or asphaltics.

C. The manufacturer's rated application temperature range shall be from 5 to 125 degrees F. The service temperature range shall be from -40 to 212 degrees F.

D. The cross sectional dimensions of the unexpanded waterstop shall be one inch by 3/4-inch.

E. The waterstop shall be provided with an adhesive backing which will provide excellent adhesion to concrete surfaces.

2.08 SLIP DOWELS

A. Slip dowels in joints shall be A36 smooth epoxy-coated bars, conforming to ASTM A 775.

2.09 PVC TUBING

A. PVC tubing in joints shall be Sch. SDR 13.5, conforming to ASTM D 2241.

PART 3 -- EXECUTION

3.01 GENERAL

A. Waterstops of the type specified herein shall be embedded in the concrete across joints as shown. All waterstops shall be fully continuous for the extent of the joint. Splices necessary to provide such continuity shall be accomplished in conformance to printed instructions of manufacturer of the waterstops. The CONTRACTOR shall take suitable precautions and means to support and protect the waterstops during the progress of the work and shall repair or replace at its own expense any waterstops damaged during the progress of the work. All waterstops shall be stored so as to permit free circulation of air around the waterstop material.

B. When any waterstop is installed in the concrete on one side of a joint, while the other half or portion of the waterstop remains exposed to the atmosphere for more than 2 days, suitable precautions shall be taken to shade and protect the exposed waterstop from direct rays of the sun during the entire exposure and until the exposed portion of the waterstop is embedded in concrete.

3.02 SPLICES IN WATERSTOPS

A. Splices in waterstops shall be performed by heat sealing the adjacent waterstop sections in accordance with the manufacturer's printed recommendations. It is essential that:

1. The material not be damaged by heat sealing.

2. The splices have a tensile strength of not less than 60 percent of the unspliced materials tensile strength.

3. The continuity of the waterstop ribs and of its tubular center axis be maintained.

B. Butt joints of the ends of 2 identical waterstop sections may be made while the material is in the forms.

C. All joints with waterstops involving more than 2 ends to be jointed together, and all joints which involve an angle cut, alignment change, or the joining of 2 dissimilar waterstop sections shall be prefabricated by the CONTRACTOR prior to placement in the forms, allowing not less than 24-inch long strips of waterstop material beyond the joint. Upon being inspected and approved, such prefabricated waterstop joint assemblies shall be installed in the forms and the ends of the 24-inch strips shall be butt welded to the straight run portions of waterstop in place in the forms.

D. Where a centerbulb waterstop intersects and is jointed with a non-centerbulb waterstop, care shall be taken to seal the end of the centerbulb, using additional PVC material if needed.

3.03 JOINT CONSTRUCTION

A. Setting Waterstops: In order to eliminate faulty installation that may result in joint leakage, particular care shall be taken of the correct positioning of the waterstops during installation. Adequate provisions must be made to support and anchor the waterstops during the progress of the WORK and to insure the proper embedment in the concrete. The symmetrical halves of the waterstops shall be equally divided between the concrete pours at the joints. The center axis of the waterstops shall be coincident with the joint openings. Maximum density and imperviousness of the concrete shall be insured by thoroughly working it in the vicinity of all joints.

B. In placing flat-strip waterstops in the forms, means shall be provided to prevent them from being folded over by the concrete as it is placed. Unless otherwise shown, all waterstops shall be held in place with light wire ties on 12-inch centers which shall be passed through the edge of the waterstop and tied to the curtain of reinforcing steel. Horizontal waterstops, with their flat face in a vertical plane, shall be held in place with continuous supports to which the top edge of the waterstop shall be tacked. In placing concrete around horizontal waterstops, with their flat face in a horizontal plane, concrete shall be worked under the waterstops by hand so as to avoid the formation of air and rock pockets.

C. In placing centerbulb waterstops in expansion joints, the centerbulb shall be centered on the joint filler material.

D. Waterstop in vertical wall joints shall stop 6 inches from the top of the wall where such waterstop does not connect with any other waterstop and is not to be connected to for a future concrete placement.

E. Joint Location: Construction joints, and other types of joints, shall be provided where shown. When not shown, construction joints shall be provided at 25-foot maximum

spacing for all concrete construction, unless noted otherwise. Where joints are shown spaced greater than 40 feet apart, additional joints shall be provided to maintain the 25-foot maximum spacing. The location of all joints, of any type, shall be submitted for acceptance by the ENGINEER.

F. Joint Preparation: Special care shall be used in preparing concrete surfaces at joints where bonding between 2 sections of concrete is required. Unless otherwise shown, such bonding will be required at all horizontal joints in walls. Surfaces shall be prepared in accordance with the requirements of Section [03300], "Cast-in-Place Concrete." Except on horizontal wall construction joints, wall to slab joints or where otherwise shown or specified, at all joints where waterstops are required, the joint face of the first pour shall be coated with a bond breaker as specified herein.

G. Construction Joint Sealant: Construction joints in water-bearing floor slabs, and elsewhere as shown, shall be provided with tapered grooves which shall be filled with a construction joint sealant. The material used for forming the tapered grooves shall be left in the grooves until just before the grooves are cleaned and filled with joint sealant. After removing the forms from the grooves, all laitance and fins shall be removed, and the grooves shall be sand-blasted. The grooves shall be allowed to become thoroughly dry, after which they shall be blown out; immediately thereafter, they shall be primed, bond breaker tape placed in the bottom of the groove, and filled with the construction joint sealant. The primer used shall be supplied by the same manufacturer supplying the sealant. No sealant will be permitted to be used without a primer. Care shall be used to completely fill the sealant grooves. Areas designated to receive a sealant fillet shall be thoroughly cleaned, as outlined for the tapered grooves, prior to application of the sealant.

H. The primer and sealant shall be placed strictly in accordance with the printed recommendations of the manufacturer, taking special care to properly mix the sealant prior to application. The sides of the sealant groove shall not be coated with bond breaker, curing compound, or any other substance which would interfere with proper bonding of the sealant. All sealant shall achieve final cure at least 7 days before the structure is filled with water.

I. All sealant shall be installed by a competent waterproofing specialty contractor who has a successful record of performance in similar installations. Before work is commenced, the crew doing the WORK shall be instructed as to the proper method of application by a representative of the sealant manufacturer.

J. Thorough, uniform mixing of 2-part, catalyst-cured materials is essential; special care shall be taken to properly mix the sealer before its application. Before any sealer is placed, the CONTRACTOR shall arrange to have the crew doing the WORK carefully instructed as to the proper method of mixing and application by a representative of the sealant manufacturer.

K. Any joint sealant which, after the manufacturer's recommended curing time for the job conditions of the WORK hereunder, fails to fully and properly cure shall be completely removed; the groove shall be thoroughly sandblasted to remove all traces of the uncured or partially cured sealant and primer, and shall be re-sealed with the specified joint sealant. All costs of such removal, joint treatment, re-sealing, and appurtenant work shall be at the

expense of the CONTRACTOR.

L. Bentonite Waterstop:

1. Where a bentonite waterstop is called for in the Contract Documents, it shall be installed with the manufacturer's instructions and recommendations; except, as modified herein.

2. When requested by the ENGINEER, the manufacturer shall provide technical assistance in the field.

3. Bentonite waterstop shall only be used where complete confinement by concrete is provided. Bentonite waterstop shall not be used in expansion or contraction joints nor in the first 6 inches of any intersecting joint.

4. The bentonite waterstop shall be located as near as possible to the center of the joint and it shall be continuous around the entire joint. The minimum distance from the edge of the waterstop to the face of the member shall be 5 inches.

5. Where the thickness of the concrete member to be placed on the bentonite waterstop is less than 12 inches, the waterstop shall be placed in grooves formed or ground into the concrete. The groove shall be at least 3/4 inch deep and 1-1/4 inches wide. When placed in the groove, the minimum distance from the edge of the waterstop to the face of the member shall be 2.5 inches.

6. Where a bentonite waterstop is used in combination with PVC waterstop, the bentonite waterstop shall overlap the PVC waterstop for a minimum of 6 inches and shall be placed in contact with the PVC waterstop.

7. The bentonite waterstop shall not be placed when the temperature of the waterstop material is below 40 degrees F. The waterstop material may be warmed so that it shall remain above 40 degrees F during placement; however, means used to warm the material shall in no way harm the material or its properties. The waterstop shall not be installed where the air temperature falls outside the manufacturer's recommended range.

8. The concrete surface under the bentonite waterstop shall be smooth and uniform. The concrete shall be ground smooth if needed. Alternately, the bentonite waterstop shall be bonded to the surface using an epoxy grout which completely fills all voids and irregularities beneath the waterstop material. Prior to installation, the concrete surface shall be wire brushed to remove any laitance or other materials that may interfere with the bonding of epoxy.

9. The bentonite waterstop shall be secured in place with concrete nails and washers at 12-inch maximum spacing. This shall be in addition to the adhesive backing provided with the waterstop.

- END OF SECTION -

SECTION 03315

GROUT

Part 1 - GENERAL

1.01 THE REQUIREMENT

A. The CONTRACTOR shall furnish all materials for grout in accordance with the provisions of this Section and shall form, mix, place, cure, repair, finish, and do all other work as required to produce finished grout, in accordance with the requirements of the Contract Documents.
B. The following types of grout shall be covered in this Section

1. Non-Shrink Grout: This type of grout is to be used wherever grout is shown in the Contract Documents, unless another type is specifically referenced.
2. Cement Grout
3. Epoxy Grout
4. Topping Grout and Concrete Fill

1.02 REFERENCE SPECIFICATIONS, CODES, AND STANDARDS

A. Specifications, codes, and standards shall be as specified in Section 03300 - Cast In Place & Precast Concrete and as referred to herein.
B. Commercial Standards:

CRD-C 621	Corps of Engineers Specification for Non-shrink Grout
ASTM C 109	Test Method for Compressive Strength of Hydraulic Cement Mortars (Using 2-in or 50-mm Cube Specimens)
ASTM C 531	Test Method for Linear Shrinkage and Coefficient of Thermal Expansion of Chemical- Resistant Mortars, Grouts, and Monolithic Surfacings
ASTM C 579	Test Methods for Compressive Strength of Chemical-Resistant Mortars and Monolithic Surfacings
ASTM C 827	Test Method for Early Volume Change of Cementitious Mixtures
ASTM D 696	Test Method for Coefficient of Linear Thermal Expansion of Plastics

1.04 CONTRACTOR SUBMITTALS

A. The CONTRACTOR shall submit certified test results verifying the compressive strength, shrinkage, and expansion requirements specified herein; and manufacturer's literature containing instructions and recommendations on the mixing, handling, placement and appropriate uses for each type of non-shrink and epoxy grout used in the work.

1.05 QUALITY ASSURANCE

A. Field Tests:

1. Compression test specimens will be taken during construction from the first placement of each type of grout, and at intervals thereafter as selected by the ENGINEER to insure continued compliance with these specifications. The specimens will be made by the ENGINEER or its representative.
2. Compression tests and fabrication of specimens for cement grout and non-shrink grout will be performed as specified in ASTM C 109 at intervals during construction as selected by the ENGINEER. A set of three specimens will be made for testing at 7 days, 28 days, and each additional time period as appropriate.
3. Compression tests and fabrication of specimens for epoxy grout will be performed as specified in ASTM C 579, Method B, at intervals during construction as selected by the ENGINEER. A set of three specimens will be made for testing at 7 days, and each earlier time period as appropriate.
4. All grout, already placed, which fails to meet the requirements of these specifications, is subject to removal and replacement at the cost of the CONTRACTOR.
5. The cost of all laboratory tests on grout will be borne by the OWNER, but the CONTRACTOR shall assist the ENGINEER in obtaining specimens for testing. However, the CONTRACTOR shall be charged for the cost of any additional tests and investigation on work performed which does not meet the specifications. The CONTRACTOR shall supply all materials necessary for fabricating the test specimens.

B. Construction Tolerances: Construction tolerances shall be as specified in the Section 03300 - Cast In Place & Precast Concrete, except as modified herein and elsewhere in the Contract Documents.

Part 2 - PRODUCTS

2.01 CEMENT GROUT

A. Cement Grout: Cement grout shall be composed of one part cement, three parts sand, and the minimum amount of water necessary to obtain the desired consistency. Where needed to match the color of adjacent concrete, white portland cement shall be blended with regular cement as needed. The minimum compressive strength at 28 days shall be 4000 psi.
B. Cement grout materials shall be as specified in Section 03300 - Cast In Place & Precast Concrete.

2.02 PREPACKAGED GROUTS

A. Non-Shrink Grout:

1. Non-shrink grout shall be a prepackaged, inorganic, non-gas-liberating, non-metallic, cement-based grout requiring only the addition of water. Manufacturer's instructions shall be printed on each bag or other container in which the materials are packaged. The specific formulation for each class of non-shrink grout specified herein shall be that recommended by the manufacturer for the particular application.
2. Class A non-shrink grouts shall have a minimum 28 day compressive strength of 5000 psi; shall have no shrinkage (0.0 percent) and a maximum 4.0 percent expansion in the plastic state when tested in accordance with ASTM C-827; and shall have no shrinkage (0.0 percent) and a maximum of 0.2 percent expansion in the hardened state when tested in accordance with CRD C 621.
3. Class B non-shrink grouts shall have a minimum 28 day compressive strength of 5000 psi and shall meet the requirements of CRD C 621.
4. Application:

(a) Class A non-shrink grout shall be used for the repair of all holes and defects in concrete members which are water bearing or in contact with soil or other fill material, grouting under all equipment base plates, and at all locations where grout is specified in the contract documents; except, for those applications for Class B non-shrink grout and epoxy grout specified herein. Class A non-shrink grout may be used in place of Class B non-shrink grout for all applications.
(b) Class B non-shrink grout shall be used for the repair of all holes and defects in concrete members which are not water-bearing and not in

contact with soil or other fill material, grouting under all base plates for structural steel members, and grouting railing posts in place

B. Epoxy Grout:

1. Epoxy grout shall be a pourable, non-shrink, 100 percent solids system. The epoxy grout system shall have three components: resin, hardener, and specially blended aggregate, all premeasured and prepackaged. The resin component shall not contain any non-reactive diluents. Resins containing butyl glycidyl ether (BGE) or other highly volatile and hazardous reactive diluents are not acceptable. Variation of component ratios is not permitted unless specifically recommended by the manufacturer. Manufacturer's instructions shall be printed on each container in which the materials are packaged. Epoxy grout shall be BurkEpoxy Anchoring Grout by The Burke Company.
2. The chemical formulation of the epoxy grout shall be that recommended by the manufacturer for the particular application.
3. The mixed epoxy grout system shall have a minimum working life of 45 minutes at 75 degrees F.
4. The epoxy grout shall develop a compressive strength of 5000 psi in 24 hours and 10,000 psi in seven days when tested in accordance with ASTM C 579, Method B. There shall be no shrinkage (0.0 percent) and a maximum 4.0 percent expansion when tested in accordance with ASTM C 827.
5. The epoxy grout shall exhibit a minimum effective bearing area of 95 percent. This shall be determined by a test consisting of filling a 2-inch diameter by 4-inch high metal cylinder mold covered with a glass plate coated with a release agent. A weight shall be placed on the glass plate. At 24 hours after casting, the weight and plate shall be removed and the area in plan of all voids measured. The surface of the grout shall be probed with a sharp instrument to locate all voids.
6. The peak exotherm of a 2-inch diameter by 4-inch high cylinder shall not exceed 95 degrees F when tested with 75 degree F material at laboratory temperature. The epoxy grout shall exhibit a maximum thermal coefficient of 30 x 10-6 inches/inch/degree F when tested according to ASTM C 531 or ASTM D 696.
7. Application: Epoxy grout shall be used to embed all anchor bolts and reinforcing steel required to be set in grout, and for all other applications required in the Contract Documents.

2.04 TOPPING GROUT AND CONCRETE FILL

A. Grout for topping of slabs and concrete fill for built-up surfaces of tank, channel, and basin bottoms shall be composed of cement, fine aggregate, coarse aggregate, water, and admixtures proportioned and mixed as specified herein. All materials and procedures specified for normal concrete in Section 03300 - Cast In Place & Precast Concrete shall apply except as noted otherwise herein.

B. Topping grout and concrete fill shall contain a minimum of 564 pound of cement per cubic yard with a maximum water cement ratio of 0.45. Where concrete fill is thicker than 3 inches, "Cast-in-Place Concrete," may be used when accepted by the ENGINEER.

C. Coarse aggregate shall be graded as follows:

U.S. STANDARD SIEVE SIZE	PERCENT BY WEIGHT PASSING
1/2"	100
3/8"	90-100
No. 4	20-55
No. 8	5-30
No. 16	0-10
No. 30	0

D. Final mix design shall be as determined by trial mix design under supervision of the approved testing laboratory.

E. Strength: Minimum compressive strength of topping grout and concrete fill at the end of 28 days shall be 3000 psi.

2.05 CURING MATERIALS

A. Curing materials shall be as specified in Section 03300 - Cast In Place & Precast Concrete for cement grout and as recommended by the manufacturer of prepackaged grouts.

2.06 CONSISTENCY

A. The consistency of grouts shall be that necessary to completely fill the space to be grouted for the particular application. Dry pack consistency is such that the grout is plastic and moldable but will not flow. Where "dry pack" is called for in the Contract Documents, it shall mean a grout of that consistency; the type of grout to be used shall be as specified herein for the particular application.

B. The slump for topping grout and concrete fill shall be adjusted to match placement and finishing conditions but shall not exceed 4 inches.

2.07 MEASUREMENT OF INGREDIENTS

A. Measurements for cement grout shall be made accurately by volume using containers. Shovel measurement shall not be allowed.
B. Prepackaged grouts shall have ingredients measured by means recommended by the manufacturer.

Part 3 - EXECUTION

3.01 GENERAL

A. All surface preparation, curing, and protection of cement grout shall be as specified in Section 03300 - Cast In Place & Precast Concrete. The finish of the grout surface shall match that of the adjacent concrete.
B. The manufacturer of Class A non-shrink grout and epoxy grout shall provide on-site technical assistance upon request.
C. Base concrete or masonry must have attained its design strength before grout is placed, unless authorized by the ENGINEER.

3.02 GROUTING PROCEDURES

A. Prepackage Grouts: All mixing, surface preparation, handling, placing, consolidation, curing, and other means of execution for prepackaged grouts shall be done according to the instructions and recommendations of the manufacturer.
B. Base Plate Grouting

1. For base plates, the original concrete shall be blocked out or finished off a sufficient distance below the plate to provide for a one-inch thickness of grout or a thickness as shown on the Drawings.

2. After the base plate has been set in position at the proper elevation by steel wedges or double nuts on the anchor bolts, the space between the bottom of the plate and the original pour of concrete shall be filled with non-shrink-type grout. The mixture shall be of a trowelable consistency and tamped or rodded solidly into the space between the plate and the base concrete. A backing board or stop shall be provided at the back side of the space to be filled with grout. Where this method of placement is not

practical or where required by the ENGINEER, alternate grouting methods shall be submitted for acceptance by the ENGINEER.

C. Topping Grout:

1. All mechanical, electrical, and finish work shall be completed prior to placement of topping or concrete fill. The base slab shall be given a roughened textured surface by sandblasting or hydroblasting exposing the aggregates to ensure bonding to the base slab.
2. The minimum thickness of grout topping and concrete fill shall be one inch. Where the finished surface of concrete fill is to form an intersecting angle of less than 45 degrees with the concrete surface it is to be placed against, a key shall be formed in the concrete surface at the intersection point. The key shall be a minimum of 3-1/2-inches wide by 1-1/2-inches deep.
3. The base slab shall be thoroughly cleaned and wetted prior to placing topping and fill. No topping concrete shall be placed until the slab is complete free from standing pools or ponds of water. A thin coat of neat Type II cement grout shall be broomed into the surface of the slab just before topping of fill placement. The topping and fill shall be compacted by rolling or tamping, brought to established grade, and floated. Grouted fill for tank and basin bottoms where scraping mechanisms are to be installed shall be screeded by blades attached to the revolving mechanism of the equipment in accordance with the procedures outlined by the equipment manufacturer after the grout is brought to the established grade.
4. Topping grout placed on sloping slabs shall proceed uniformly from the bottom of the slab to the top, for the full width of the placement.
5. The surface shall be tested with a straight edge to detect high and low spots which shall be immediately eliminated. When the topping and fill has hardened sufficiently, it shall be steel troweled to a smooth surface free from pinholes and other imperfections. An approved type of mechanical trowel may be used as an assist in this operation, but the last pass over the surface shall be by hand-troweling. During finishing, no water, dry cement or mixture of dry cement and sand shall be applied to the surface.

3.04 CONSOLIDATION

A. Grout shall be placed in such a manner, for the consistency necessary for each application, so as to assure that the space to be grouted is completely filled.

- END OF SECTION -

SECTION 03375

FLOWABLE FILL

Part 1 - GENERAL

1.01 SCOPE OF WORK

A. This Section specifies the requirements for flowable fill used for trenches, support for pipe structures, culverts, utility cuts and other works where cavities exist and where firm support is needed for pavements and structural elements. Flowable fill may also be used to fill water and sewer lines, and fuel tanks placed out of service, and at other locations approved by the Engineer of Record.

Part 2 - PRODUCTS

2.01 MATERIALS

The materials used shall conform with the requirements specified in Division III of the F.D.O.T. Standard Specifications for Road and Bridge Construction, latest edition, and herein. Specific references are as follows:

A. Portland Cement (Types I, II or II) ..... Section 921
B. Fly Ash, Slag and other Pozzolanic Materials for Portland Cement Concrete ..... Section 929
C. Fine Aggregate (Sand)* ..... Section 902
D. Water ..... Section 923

*Any clean sand with 100% passing 3/8" sieve and not more than 10% passing with 200 mesh may be used.

2.02 MIX PROPORTIONS

A. The Contractor shall be responsible for producing a flowable mixture using these guidelines and by adjusting his mixture design as called for by circumstances or as may be directed by the Engineer of Record.
B. Excavatable flowable fill material shall be proportioned to produce a 28-day compressive strength of 100 psi.
C. General mix quantities are as follows:

Components	**Pounds per Cubic Yard**
Cement	50-100*
Fly Ash or Granulated Blast Furnace Slag	0-600
Fine Sand	2,750 (adjust to yield one CY)
Water	500 (Maximum)

*The percentage of cement may be increased above these limits only when early strength is required and future removal is unlikely.

D. Weights for fine aggregate and water shall be adjusted according to cementious content. The mix proportions shall be adjusted for removability, pumpability and flowability. If required, strength test data shall be provided prior to batching.

E. If required by the Engineer of Record, the flowability can be measured by afflux time determined in accordance with ASTM C 939 and shall be 30 seconds ± 5 seconds as measured on mortar passing the No. 4 sieve. The equipment required to perform this test shall be provided by the Contractor.

2.03 APPROVED MIXES OF "EXCAVATABLE FLOWABLE FILL"

FDOT - Approved Design Mixes:

Plant	**Mix Number**
Tarmac	04-FF-65
Rinker Materials Corp.	04-FF-52
Central Concrete Supermix Inc.	06-FF-41
Cemex	06-FF-48

Part 3 - EXECUTION

3.01 PRODUCTION AND PLACING

Flowable fill shall be produced and delivered using concrete construction equipment. Placing flowable fill shall be done by chute, pumping or other methods approved by the Engineer of Record.

3.02 CONSTRUCTION REQUIREMENTS

The flowable fill shall be placed to the designated fill line without vibration or other means of compaction. Placement shall be avoided during inclement weather, e.g. rain or ambient temperatures below 40 degrees F. The Contractor shall take all necessary precautions to prevent any damages caused by the hydraulic pressure of the fill during placement prior to hardening. Also, necessary means to confine the material within the designated space shall be provided by the Contractor.

3.04 ACCEPTANCE

A. The flowable fill shall be proportioned and placed as specified herein. In general, the strength desired is the maximum hardness that can be excavated at a later dated using conventional excavating equipment. No curing protection is required.
B. The fill shall be left undisturbed until material obtains sufficient strength. Sufficient strength is 250 psi penetration resistance as measured using a hand held penetrometer. The penetrometer shall be provided by the Contractor.
C. All flowable fill areas subject to traffic loads must have a durable riding surface.
D. An approved type of accelerator may be approved for the placement of "Flowable Fill" in traffic areas when submitted to the City for F.D.O.T. approval.

- END OF SECTION -

SECTION 03400

PRECAST CONCRETE

Part 1 - GENERAL

1.01 THE REQUIREMENT

A. The CONTRACTOR shall furnish all tools, equipment, materials, and supplies and shall perform all labor required to complete the precast concrete work in accordance with the Contract Documents.
B. This Section covers the design, fabrication, delivery and installation of all precast concrete units, including connections, complete, in place, as shown and specified.
C. Precast concrete units shall be designed and fabricated by an experienced and acceptable precast concrete manufacturer. The manufacturer shall have been regularly and continuously engaged in the manufacture of precast concrete units similar to that indicated in the project specifications or drawings for at least 5 years.

1.02 CONTRACTOR SUBMITTALS

A. Shop Drawings:

1. Shop drawings shall show details in accordance with ACI 315 and ACI 318 including installation details and design computations.
2. Shop drawings, including design computations, shall be stamped and signed by a structural engineer registered in the State and shall be approved by the ENGINEER.
3. Shop Drawings: Showing all elevations, dimensions, horizontal and vertical sections, openings, inserts, reinforcing, anchorage devices, details, design computations, and other requirements for each different type of panel to be incorporated into the portion of the project covered by the submittal. Drawings shall be 24 inches x 36 inches maximum.

B. Test Reports: Tests for compressive strength of concrete shall be performed by an independent commercial testing laboratory. Copies of test reports including all test data and all test results shall be submitted.
C. Certificates of Compliance: Certificates of compliance shall be submitted attesting that materials and products meet or exceed specified requirements.
D. Manufacturer's Qualifications: Prior to commencing operations, a statement shall be submitted giving the qualifications of the precast concrete Manufacturer, and evidence that the Manufacturer and plant are PCI certified.

1.04 QUALITY ASSURANCE

A. General Requirements: Design members under direct supervision of a professional structural engineer experienced in design of precast concrete units, registered in the State and conforming to requirements of PCI MNL-121 and to ACI 318.

1. Precast Manufacturer and erectors shall be qualified in accordance with PCI MNL-117 and MNL-116.
2. Welding shall be in accordance with AWS D1.1, AWS D12.1, AWS B2.1, and AWS A5.4.

1.05 DESIGN REQUIREMENTS

A. General: The precast structure and connection design shall conform to all applicable codes and Specification for the Design, Fabrication and Erection of civil concrete structures
B. Connections: Prior to submitting shop drawings, the CONTRACTOR shall verify the precast connection designs shown against the aforementioned and following design criteria and provide any additional materials necessary to meet the design conditions if applicable.
C. Concrete Mix: The concrete mix shall be as stated on section 03300, “Cast-in-Place Concrete, Reinforcing and Formwork”.

1.06 DELIVERY, STORAGE AND HANDLING

A. General: Precast members shall be handled to position consistent with their shape and design; they shall be lifted and supported from design incorporated support points and provided with strong backs and other devices as required. Lifting or handling equipment shall be capable of maintaining units during manufacture, storage, transportation, erection, and in position for fastening.
B. Blocking and supports, lateral restraints and protective materials during transport and storage shall be clean, nonstaining, without causing harm to exposed surfaces, including temporary support to prevent bowing and warping. Lateral restraints shall be provided to prevent undesirable horizontal movement. Edges and exposed faces of members shall be protected to prevent straining, chipping, or spalling of concrete.
C. Units shall be marked with date of production and final position in structure in location not visible after erection.
D. Precast units shall be stored off the ground in a manner to prevent warpage and they shall be protected from weather, marring, and overload.

Part 2 - EXECUTION

2.01 INSTALLATION

A. Examination: The CONTRACTOR shall verify that building structure, anchors, devices, and openings are ready to receive work of this Section. Beginning of installation means acceptance of existing condition.
B. Preparation: The CONTRACTOR shall provide for erection procedures and induced loads, during erection, maintain temporary bracing in place until final support is provided, provide necessary hoisting equipment and safety and protective devices.

2.02 CLEANING

A. Not sooner than 72 hours after joints are sealed, faces and other exposed surfaces of precast units shall be cleaned using a cleaning detergent recommended by the sealer manufacturer and water applied with a soft bristle brush, and thoroughly rinsed using clean water or other approved procedures.
B. Units shall be cleaned when temperature and humidity conditions are such that surfaces dry rapidly (e.g., 70 degrees F and rising, 50 percent RH or less).
C. Discolorations which cannot be removed by these procedures shall be considered defective work, and repaired or replaced as directed by ENGINEER.

2.03 PROTECTION

A. Adjacent surfaces shall be protected from damage during sealing and cleaning operations and against damage, disfiguration or discoloration from subsequent operations. Noncombustible shielding shall be used during welding operations.

- END OF SECTION -

SECTION 15000

PIPING GENERAL

Part 1 - GENERAL

1.01 THE REQUIREMENT

A. The CONTRACTOR shall furnish and install to the required line and grade, all piping together with all fittings and appurtenances, required for a complete installation. All piping located outside the face of structures or building foundations and all piping embedded in concrete within a structure or foundation shall be considered exterior piping.
B. The CONTRACTOR shall furnish and install fittings, couplings, connections, sleeves, adapters, harness rods and closure pieces as required to connect pipelines of dissimilar materials and/or sizes herein included under this Section and other concurrent contracts for a complete installation.
C. The CONTRACTOR shall furnish all labor, materials, equipment, tools, and services required for the furnishing, installation and testing of all piping as shown on the Drawings, specified in this Section and required for the Work. Piping shall be furnished and installed of the material, sizes, classes, and at the locations shown on the Drawings and/or designated in this Section. Piping shall include all fittings, adapter pieces, couplings, closure pieces, joint restraints, harnessing rods, hardware, bolts, gaskets, wall sleeves, wall pipes, hangers, supports, and other associated appurtenances for required connections to equipment, valves, or structures for a complete installation.
D. The CONTRACTOR shall provide taps on piping where required or shown on the Drawings. Where pipe or fitting wall thicknesses are insufficient to provide the required number of threads, a boss or pipe saddle shall be installed.
E. The work shall include, but not be limited to, the following:

    1. Connections to existing pipelines.
    2. Test excavations necessary to locate or verify existing pipe and appurtenances.
    3. Installation of all new pipe and materials required for a complete installation.
    4. Cleaning, testing and disinfecting as required.

1.02 RELATED WORK SPECIFIED ELSEWHERE

A. Division 1, General Requirements
B. Division 2, Sitework
C. Division 15, Mechanical Construction

1.03 SUBMITTALS

SECTION 15000

PIPING GENERAL

A. The CONTRACTOR shall submit complete shop drawings and certificates, test reports, affidavits of compliance, of all piping systems, in accordance with the requirements in Section 01300 – Submittals and as specified in the individual piping sections.
B. Each shop drawing submittal shall be complete in all aspects incorporating all information and data listed herein and all additional information required to evaluate the proposed piping material's compliance with the Contract Documents. Partial or incomplete submissions will be returned to the CONTRACTOR without review.
C. Data to be submitted shall include, but not be limited to:

    1. Catalog Data consisting of specifications, illustrations, and a parts schedule that identifies the materials to be used for the various piping components and accessories. The illustrations shall be in sufficient detail to serve as a guide for assembly and disassembly.
    2. Complete layout and installation drawings with clearly marked dimensions and elevations. Piece numbers which are coordinated with the tabulated pipe layout schedule shall be clearly marked. Piping layout drawings shall provide information on the following; pipe supports, location, support type, hanger rod size, insert type and the load on the hanger in pounds.
    3. Weight of all component parts.
    4. Design calculations specified above.
    5. Tabulated pipe layout schedule which shall include the following information for all pipe and fittings, service, pipe size, working pressure, wall thickness and piece number.

D. Certifications: Prior to installation, the CONTRACTOR shall furnish an Affidavit of Compliance certified by the pipe manufacturer that the pipe, fittings and specials furnished under this Contract comply with all applicable provisions of AWWA and these specifications.
   No pipe or fittings will be accepted for use in the Work on this project until the affidavits have been submitted and accepted in accordance with Section 01300 – Submittals.
E. All expenses incurred in making samples for certification of tests shall be borne by the CONTRACTOR.

1.04 QUALITY ASSURANCE

A. Tests: Except where otherwise specified, all materials used in the manufacture of the pipe shall be tested in accordance with the applicable Specifications and Standards.
B. In accordance with the “Reduction of Lead in Drinking Water Act” (Act) enacted by the USEPA on January 4, 2011, effective January 4, 2014 all piping, fittings, fixtures, valves, and other appurtenances used in potable water supply and distribution systems shall be “lead free” as defined in Section 1417(d) of the Safe Drinking Water Act (SDWA). All requirements of the Act as it relates to the work under this Contract shall be strictly adhered to.

1.05 MANUFACTURER'S SERVICE REPRESENTATIVE

A. Where the assistance of a manufacturer's service representative is advisable, in order to obtain correct pipe joints, supports, or special connections, the CONTRACTOR shall furnish such assistance at no additional cost to the CITY.

1.06 MATERIAL DELIVERY, STORAGE, AND PROTECTION

A. All piping materials, fittings, valves, and accessories shall be delivered in a clean and undamaged condition and stored off the ground, to provide protection against oxidation caused by ground contact. Any materials susceptible to UV degradation shall be protected to eliminate exposure to sunlight. All defective or damaged materials shall be replaced with new materials. Storage shall conform with Section entitled “Site Access and Storage”.

1.07 CLEANUP

A. After completion of the work, all remaining pipe cuttings, joining and wrapping materials, and other scattered debris, shall be removed from the site. The entire piping system shall be handed over in a clean and functional condition.

Part 2 - PRODUCTS

2.01 GENERAL

A. All specials and every length of pipe shall be marked with the manufacturer's name or trademark, size, class, and the date of manufacture. Special care in handling shall be exercised during delivery, distribution, and storage of pipe to avoid damage and unnecessary stresses. Damaged pipe will be rejected and shall be replaced at the CONTRACTOR's expense. Pipe and specials stored

prior to use shall be stored in such a manner as to keep the interior free from dirt and foreign matter.

B. Testing of pipe before installation shall be as described in the corresponding ASTM or AWWA Specifications and in the applicable standard specifications listed in the following sections. Field testing after the pipe is installed shall be as specified in Section 15995 - Pipeline Testing and Disinfection.

C. Joints in piping shall be of the type as specified in Section 15060, “Piping and Fittings”.

D. Unless otherwise specified or shown on the drawings, all buried exterior piping shall have restrained joints for thrust protection, and all exposed exterior piping shall have flanged joints.

E. The Drawings indicate work affecting existing piping and appurtenances. The CONTRACTOR shall excavate test pits as required of all connections and crossings which may affect the CONTRACTOR's work prior to ordering pipe and fittings to determine sufficient information for ordering materials. The CONTRACTOR shall take whatever measurements that are required to complete the work as shown or specified.

F. Any ferrous metal pipes are required to be polywrapped, minimum 8 mil, with polywrap and secured with polutape. Polywrap and polytape to be approved by the City.

2.02 WALL PIPES (Not Used)

2.03 SLEEVES (Not Used)

2.04 SOLID SLEEVE COUPLINGS

A. Solid sleeve couplings shall be used to connect buried service piping where shown on the Drawings. Solid sleeves shall be ductile iron, long body and shall conform to the requirements of ANSI A21.10 (AWWA C110). Unless otherwise shown or specified, solid sleeve couplings shall be Style A11760 as manufactured by American Cast Iron Pipe Co., or equal.

2.05 SLEEVE TYPE COUPLINGS (SEWER ONLY) (Not Used)

2.06 MECHANICAL COUPLINGS

A. Construction: Mechanical couplings shall be provided where shown on the Drawing, and shall be of similar material as the pipe, without pipe stop, and

shall be of sizes to fit the pipe and fittings shown. The middle ring shall be not less than 1/4-inch in thickness and shall be either 5 or 7-inches long for standard steel couplings, and 16-inches long for long-sleeve couplings. The followers shall be single-piece contoured mill section welded and cold-expanded as required for the middle rings. They shall be of sufficient strength to accommodate the number of bolts necessary to obtain adequate gasket pressures without excessive rolling. The shape of the follower shall be of such design as to provide positive confinement of the gasket.

B. Gaskets

1. Gaskets for mechanical couplings shall be rubber-compound material that will not deteriorate from age or exposure to air under normal storage or use conditions. Gaskets for wastewater and sewerage applications shall be Buna “N”, Grade 60, or equivalent suitable elastomer. The rubber in the gasket shall meet the following specifications:

   (a) Color - Jet Black.
   (b) Surface - Nonblooming.
   (c) Durometer Hardness - 74 + 5.
   (d) Tensile Strength - 1000 psi Minimum.
   (e) Elongation - 175 percent Minimum.

2. The gaskets shall be immune to attack by the material which is being transported.
3. Where couplings are used in water containing chloramines or other fluids which attack rubber materials, gasket material shall be compatible with the piping service and fluid utilized.
4. Gasket materials used for potable water containing chloramines shall be EPDM.

C. Bolts, nuts and washers shall be ASTM A193, Grade B7 for above-ground applications. Buried applications shall use 316 stainless steel hardware.

D. Coatings: Couplings shall be shop primed with a primer compatible with the painting system specified in the Section 09940 – Painting.

E. Harnessing: Where harnesses are required for mechanical couplings, they shall be in accordance with the requirements shown on the Drawings.

F. Manufacturer shall be the following, or equal:

1. Rockwell (Smith-Blair), Style 411
2. Dresser, Style 38
3. Total Piping Solution, Inc. (TPS) -Hymax

4. Ford Meter Box Co., Inc., Style FC1 or FC3.

2.08 FLANGED ADAPTERS

A. Flanged adapters shall be furnished as required and as shown on the Drawings.
B. All flanged adapters, 12 inches in diameter and smaller, except as shown on the Drawings or directed by the ENGINEER, shall be locking type flanged adapters.
C. Pressure and service shall be the same as connected piping.
D. Materials shall be cast iron for pipes up to 12-inch diameter and high strength steel for pipes larger than 12 inch diameter.
E. Flanged adapters shall be shop primed with a premium quality primer compatible with the paint system specified in Section 09940 - Painting.
F. Bolts and nuts shall be alloy steel, corrosion-resistant and prime coated.
G. Flanged coupling adapters shall be harnessed by tying the adapter to the nearest pipe joint flange using threaded rods and rod tabs. The threaded rods and rod tabs shall be as shown on the Drawings.
H. Flanged adapters shall be as manufactured by Dresser Industries, Style 127 or 128, Smith Blair Corporation, or equal.

2.09 UNIONS

A. For ductile iron and PVC piping, see Section 15060, “Piping and Fittings”.
B. For copper piping, unions shall have ground joints and conform to ANSI B16.18.

2.10 TAPPING SLEEVES AND TAPPING SADDLES

A. Refer to Section 15102 - Tapping Sleeves and Tapping Valves.

Part 3 - EXECUTION

3.01 INSTALLATION

A. All piping shall be installed by skilled workmen and in accordance with the best standard practice for piping installation as shown on the Drawings, specified or recommended by the pipe manufacturer. Proper tools and appliances for the safe and convenient handling and installing of the pipe and fittings shall be used. Great care shall be taken to prevent any pipe coating from being damaged on the inside or outside of the pipe and fittings. All pieces shall be carefully examined for defects, and no piece shall be installed which is known

to be cracked, damaged, or otherwise defective. If any defective pieces should be discovered after having been installed, it shall be removed and replaced with a sound one in a satisfactory manner by the CONTRACTOR and at his own expense. Pipe and fittings shall be thoroughly cleaned before they are installed and shall be kept clean until they are accepted in the complete work. All piping connections to equipment shall be provided with unions or coupling flanges located so that piping may be readily dismantled from the equipment. At certain applications, Dresser, Victaulic, or equal, couplings may also be used. All piping shall be installed in such a manner that it will be free to expand and contract without injury to itself or to structures and equipment to which it is connected. All piping shall be erected to accurate lines and grades with no abrupt changes in line or grade and shall be supported and braced against movement, temporary, or permanent. All exposed piping shall be installed with vertical and horizontal angles properly related to adjoining surfaces or pipes to give the appearance of good workmanship.

B. All excavation shall be made in such a manner and to such widths as will provide ample room for properly installing the pipe and permit thorough compaction of backfill around the pipe. The minimum trench widths shall be in strict accordance with the "Trench Width Excavation Limits" as shown on the Drawings. All excavation and trenching shall be done in strict accordance with these specifications and all applicable parts of the OSHA Regulations, 29CFR 1926, Subpart P.

C. Enlargements of the trench shall be made as needed to give ample space for operations at pipe joints. The width of the trench shall be limited to the maximum dimensions shown on the Drawings, except where a wider trench is needed for the installation of and work within sheeting and bracing. Except where otherwise specified, excavation slopes shall be flat enough to avoid slides which will cause disturbance of the subgrade, damage to adjacent areas, or endanger the lives or safety of persons in the vicinity.

D. Hand excavation shall be employed wherever, in the opinion of the ENGINEER, it is necessary for the protection of existing utilities, poles, trees, pavements, or obstructions.

E. No greater length of trench in any location shall be left open, in advance of pipe laying, than shall be authorized or directed by the ENGINEER and, in general, such length shall be limited to approximately one hundred (100) feet. The CONTRACTOR shall excavate the trenches to the full depth, width and grade indicated on the Drawings including the relevant requirements for bedding. The trench bottoms shall then be examined by the ENGINEER as to the condition and bearing value before any pipe is laid or bedding is placed.

F. No pipe trench shall be backfilled until required pressure testing has been performed. All testing shall be in accordance with Section 15995 – Pipeline Testing and Disinfection.
G. Following proper preparation of the trench subgrade, pipe and fittings shall be carefully lowered into the trench so as to prevent dirt and other foreign substances from gaining entrance into the pipe and fittings. Proper facilities shall be provided for lowering sections of pipe into trenches. Under no circumstances shall any of the materials be dropped or dumped into the trench.
H. Water shall be kept out of the trench until jointing and backfilling are completed. When work is not in progress, open ends of pipe, fittings, and valves shall be securely closed so that no water, earth, or other substance will enter the pipes, fitting, or valves. Pipe ends left for future connections shall be valved, plugged, or capped, and anchored as required.
I. Pipes crossing within a vertical distance of less than or equal to one (1) foot shall be encased and supported with concrete at the point of crossing to prevent damage to the adjacent pipes as indicated by the CITY and ENGINEER at no additional cost to the CITY.
J. The full length of each section of pipe shall rest solidly upon the bed of the trench, with recesses excavated to accommodate bells, couplings, joints, and fittings. Before joints are made, each pipe shall be well bedded on a solid foundation; and no pipe shall be brought into position until the preceding length has been thoroughly bedded and secured in place. Pipe that has the grade or joint disturbed after laying shall be taken up and relaid by the CONTRACTOR at his own expense. Pipe shall not be laid in water or when trench conditions are unsuitable for work.
K. Proper and suitable tools and appliances for the safe convenient handling and laying of pipe shall be used and shall in general agree with manufacturer's recommendations.
L. At the close of each work day the end of the pipeline shall be tightly sealed with a cap or plug so that no water, dirt, or other foreign substance may enter the pipeline, and this plug shall be kept in place until pipe laying is resumed.
M. During the laying of pipe, each pipe manufacturer shall provide his own supervisor to instruct the CONTRACTOR's pipe laying personnel in the correct procedure to be followed.
N. All piping shall have bedding – refer to the Drawings and other Specification Sections.

3.02 JOINTS IN PIPING

A. Restrained joints: shall be provided on all pipe joints as specified herein and shown on the Drawings. Restrained joints shall be made up similar to that for push-on joints.

B. Push-on joints: include a single rubber gasket which fits into the bell end of the pipe. The gasket shall be wiped clean, flexed and then placed in the socket. Any bulges in the gasket which might interfere with the entry of the plain end of the pipe shall be removed. A thin film of lubricant shall be applied to the gasket surface which will come into contact with the spigot end of the pipe. The lubricant shall be furnished by the pipe manufacturer. The plain end of the pipe, which is tapered for ease of assembly, shall be wiped clean and a thick film of lubricant applied to the outside. The pipe shall be aligned and carefully entered into the socket until it just makes contact with the gasket. The joint assembly shall be completed by entering the pipe past the gasket until it makes contact with the bottom of the socket. The pipe shall be pulled "home" with an approved jack assembly as recommended by the pipe manufacturer. If assembly is not accomplished by reasonable force, the plain end shall be removed and the condition corrected.

C. Mechanical joints: shall be made up with gaskets, glands and bolts. When a joint is to be made up, the bell or socket and plain end shall be cleaned and washed with a solution or mild soap in water; the gland and gasket shall be slid onto the plain end and the end then entered into the socket until it is fully "home" on the centering ring. The gasket shall then be painted with soapy water and slid into position, followed by the gland. All bolts shall be inserted and made up hand tight and then tightened alternately to bring the gland into position evenly. Excessive tightening of the bolts shall be avoided. All nuts shall be pulled up using a torque wrench which will not permit unequal stresses in the bolts. Torque shall not exceed the recommendations of the manufacturer of the pipe and bolts for the various sizes. Care shall be taken to assure that the pipe remains fully "home" while the joint is being made. Joints shall conform to the applicable AWWA Specifications.

D. Threaded and/or screwed joints: shall have long tapered full depth threads to be made with the appropriate paste or jointing compound, depending on the type of fluid to be processed through the pipe. All pipe up to, and including 1-1/2-inches, shall be reamed to remove burrs and stood on end and well pounded to remove scale and dirt. Wrenches on valves and fittings shall be applied directly over the joint being tightened. Not more than three pipe threads shall be exposed at each connection. Pipe, in all lines subject to temperature changes shall be cut short and cold sprung into place to compensate for expansion when hot. Joints in all piping used for chlorine gas

lines shall be made up with a glycerine and litharge cement. Joints in plastic piping (PVC/CPVC) shall be laid and joints made with compounds recommended by the manufacturer.

Installation shall conform to the requirements of ASTM D2774 and ASTM D2855. Unions required adjacent to valves and equipment.

E. Solvent or adhesive welded joints: in plastic piping shall be accomplished in strict accordance with the pipe manufacturer's recommendations, including necessary field cuttings, sanding of pipe ends, joint support during setting period, etc. Care shall be taken that no droppings or deposits of adhesive or material remain inside the assembled piping. Solvent or adhesive material shall be compatible with the pipe itself, being a product approved by the pipe manufacturer. Unions are required adjacent to valves and equipment. Sleeve-type expansion joints shall be supplied in exposed piping to permit 1-inch minimum of expansion per 100 feet of pipe length.
F. Dielectric unions: shall be installed wherever dissimilar metals are connected except for bronze or brass valves in ferrous piping. Unions shall be provided downstream of each valve with screwed connections. The CONTRACTOR shall provide screwed or flanged unions at each piece of equipment, where shown, and where necessary to install or dismantle piping.
G. Eccentric reducers: shall be installed where air or water pockets would otherwise occur in mains because of a reduction in pipe size.

3.03 TESTING

A. All testing shall be in accordance with Section 15995 – Pipeline Testing and Disinfection

3.04 PAINTING (NOT USED)

- END OF SECTION -

SECTION 15001

WATER SERVICES AND MISCELLANEOUS FITTINGS

Part 1 - GENERAL

1.01 SCOPE

A. This Section consists of furnishing water and sewer piping complete with fittings, couplings, adapters, valves, and other appurtenances required during construction due to piping relocation or replacement.

1.02 GENERAL INFORMATION AND DESCRIPTION

A. The pipe and fittings shall be furnished by fully qualified manufacturers experienced in the fabrication, casting and manufacture of the pipe materials specified herein. The pipe and fittings shall be designed, fabricated and installed in accordance with the best practice of the trade and the standards specified herein.
B. Pipe materials shall be the same as the existing pipe being replaced or relocated. Unless otherwise shown on drawings.
C. No material furnished under this specification shall be shipped to the job site until all submittals have been reviewed.
D. All new domestic services shall be Polyethylene tubing per City of Hollywood Standard Detail W-11
E. Contractor shall coordinate all work with City of Hollywood Public Utilities staff

1.03 RELATED WORK

A. Section 02222 - Excavation and Backfill for Utilities
B. Section 02515 – Water Services Connections and Transfers

1.04 SUBMITTALS

A. The CONTRACTOR shall submit Shop Drawings in accordance with the procedures and requirements set forth in Section 01300 - Submittals.
B. Each submittal shall be complete in all aspects incorporating all information and data listed herein and all additional information required to evaluate the proposed piping material's compliance with the Contract Documents. Partial or incomplete submissions will be returned to the CONTRACTOR without review. Data to be submitted shall include, but is not limited to: catalog data consisting of specifications, illustrations and a parts schedule that identifies the materials to be used.
C. The CONTRACTOR shall submit to the ENGINEER certified shop tests in accordance with the Section 01300 - Submittals.

D. The CONTRACTOR shall submit to the ENGINEER certified letters of compliance in accordance with the Section 01300 - Submittals.

Part 2 - PRODUCTS

2.01 FITTINGS

A. All fittings shall be marked with the manufacturer's name or trade mark, size, class or pressure rating, and the date of manufacture in accordance with the standards specified herein. All D.I. fittings must be manufactured in the U.S.A. (no substitution).

2.02 POLY VINYL CHLORIDE (PVC) FOR USE IN POTABLE WATER SERVICES 2-INCH NOMINAL DIAMETER AND LESS (SCHEDULES 40 AND 80)

A. Poly vinyl chloride (PVC) pipe and fittings specified herein are small diameter PVC with threaded, flanged and solvent cemented joints. All poly (vinyl chloride) (PVC) pipe and fittings shall be made from high impact, rigid poly (vinyl chloride) compounds. Pipe and fittings shall be marked indicating size, type and schedule, ASTM Designation, manufacturer or trade mark, and shall bear the NSF (National Sanitation Foundation) seal of approval. Wherever the abbreviation PVC is used in these Specifications in relation to pipe and fittings, it shall mean poly (vinyl chloride) plastic pipe and fittings as specified herein.
B. PVC pipe shall be Schedule 80 as called for on the Plans or by the Engineer, Type I, Grade I, or Class 12454B with socket ends, and shall comply with ASTM Standard D1785, "Poly (Vinyl Chloride) (PVC) Plastic Pipe, Schedules 40, 80 and 120".
C. Schedule 80 socket-type fittings shall comply with ASTM Standard D2467, "Socket-Type Poly (Vinyl Chloride) (PVC) Plastic Pipe Fittings, Schedule 80" and D2464 "Specification for Threaded Poly Vinyl Chloride) (PVC) Plastic Pipe Fittings, Schedule 80, for threaded fittings.
D. Joining cement for PVC pipe and fittings shall comply with ASTM Standard D2564, "Solvent Cements for Poly (Vinyl Chloride) (PVC) Plastic Pipe and Fittings". Cemented joints shall be made in accordance with ASTM Standard D2855, "Recommended Practice for Making Solvent-Cemented Joints with Poly (Vinyl Chloride) (PVC) Pipe and Fittings".
E. Flanges: One piece molded hub type flat face flanges, 125 pound standard as specified under fittings hereinbefore.
F. Gaskets: Full faced, 1/8-inch thick, neoprene (for sewer) or SBR (for water).
G. AISI Type 316 stainless steel, ASTM A193, Grade B8M hex bolts and ASTM A194 Grade E8 hex head nuts. Bolts shall be fabricated in accordance with

ANSI B 1812 and provided with washers of the same materials as the bolts. Bolts to be installed west of U.S. 1 shall be carbon steel.

2.03 HIGH DENSITY POLYETHYLENE (HDPE) FOR USE IN POTABLE WATER SERVICES 2-INCH NOMINAL DIAMETER AND LESS

A. All 2-inch high density polyethylene (HDPE) pipe used for services shall be IPS-O.D. Controlled with Standard Outside Dimension Ratio (DR) of 9, pressure rating of 200 psi, nominal outside diameter of 2.375-inches, minimum wall thickness of 0.264-inches, PE 3408, all in conformance with ASTM D3035-95 "Polyethylene (PE) Plastic Pipe (DR-PR) Based on Controlled Outside Diameter". Pipe shall be in conformance with ANSI/AWWA C901-96 "Polyethylene (PE) Pressure Pipe and Tubing, ½ In. (13 mm) Through 3 In. (76 mm), for Water Service" as modified herein. Pipe shall have a (natural) inner core with a blue colored outer shell. Pipe shall have footage marks at a maximum interval of every two feet.

B. Polyethylene material shall have a minimum cell classification in accordance with ASTM D3350-00 "Polyethylene Plastics Pipe and Fitting Materials" of 345444D for the core, which shall be 100% virgin material, and 345444E for the outer shell. Note that both of these materials are UV stabilized as signified by the "D" for natural colored and "E" for the colored shell. Pipe shall be in conformance with NSF 61 or 14. Manufacturer shall supply certification of compliance with all of the above requirements. Certification shall ship with the pipe on material sold to the City and shall always be submitted with shop drawings and catalog cuts. When required by the Director of the Department of Public Utilities and/or the Engineer of Record, certification shall be signed and sealed by a professional engineer licensed to practice in the state in which the manufacturer is located or in the State of Florida.

C. All mechanical fittings utilized with HDPE pipe and tubing services shall:

1. Conform with ANSI/AWWA C800-01 "Underground Service Line Valves and Fittings" as modified herein
2. Utilize AWWA Standard (Mueller) threads on tapped pipe and tapping saddles
3. Be designed and manufactured to withstand a sustained working pressure of 150 psi and to restrain the pipe against pull-out under loading beyond the tensile yield of the HDPE pipe or tubing to which it is connected.
4. Be supplied by the manufacturer with a certification of these capabilities and fittings shall not be accepted or installed without said certification. If fittings are being supplied to the City, the certification shall ship with the fittings and payment will not be made without this certification. At the

discretion of the Engineer, this certification may be required to be signed and sealed by a professional engineer licensed to practice in the state where the supplying firm is located, or in the State of Florida. His decision in this regard shall be final. In all cases, fittings shall be installed in strict accordance with the manufacturer's instructions.

2.04 BACKFLOW PREVENTION DEVICES

A. Backflow prevention devices shall be installed on all metered water services to non-residential properties, and on all residential services where the meter is larger than 5/8-inch in diameter. They shall be installed on private property between the meter and the building connection. The actual location of the assembly shall be coordinated with the Department of Public Utilities and the property owner.
B. Backflow prevention devices for metered services between 1-inch and 3-inch diameter shall be Series LF007 Double Check Valve Assembly as manufactured by the Watt Regulator Company, or City-approved equal. For other diameters, Contractor to submit shop drawings for approval.

2.05 BALL METER VALVES

¾", 1", 1-1/2" and 2" (B43-342W, B43-444W, BF43-666W & BF43-777W) ball meter valves shall be manufactured by Ford Meter Company or CITY approved equal.

2.06 GATE VALVES 2-INCH DIAMETER AND SMALLER

Control gate valves two inches and smaller in diameter shall be NIBCO T-113-LF. No substitutions.

2.07 PACK JOINT COUPLINGS:

¾", 1", 1-1/2" and 2" Pack joint couplings for cooper or plastic tubing (C44-33, C44-44, C44-66 & C44-77) and for male iron pipe threads (C84-33, C84-44, C84-66 & C84-77) shall be manufactured by Ford Meter Company or CITY approved equal. No substitutions.

2.08 INSERT STIFFENERS AND ACCESSORIES:

1", 1-1/2" and 2" (INSERT-52, INSERT-74-DR11 & INSERT-75-DR11) insert stiffeners and accessories be manufactured by Ford Meter Company or CITY approved equal. No substitutions.

2.09 BALL VALVE CURB STOPS:

¾" (B11-333 & BL11-344-4.5) Curb stops shall meet AWWA C800, latest revision, and shall be ball valve curb stops with iron pipe threads shall be manufactured by Ford Meter Company or CITY approved equal. No substitutions.

2.10 METER FLANGES:

1-1/2" and 2" (CF31-66 & CF31-77) Outlet meter flanges shall be manufactured by Ford Meter Company or CITY approved equal. No substitutions.

2.11 STRAIGHT METER COUPLINGS:

¾" and 1" (C38-23-2.5 & C38-44-2.625) straight meter couplings shall be manufactured by Ford Meter Company or CITY approved equal. No substitutions.

2.12 "U" BRANCH PIECES:

1" and 1-1/2" (U48-43-spacing & U48-64-9-spacing) "U" branch pieces shall be manufactured by Ford Meter Company or CITY approved equal. No substitutions or CITY approved equal.

2.13 ANGLE "U" BRANCH PIECES:

1" (UA48-43-65) Angle "U" branch pieces shall be manufactured by Ford Meter Company. No substitutions.

2.14 LINESETTERS:

¾" and 1" (LSVB18-133W & LSVB21-444W) optional linesetters shall be manufactured by Ford Meter Company or CITY approved equal. No substitutions.

2.15 CALIBRATED PRESSURE RELIEF VALVES:

Use ½" and ¾" WATTS 530C calibrated pressure relief valves or CITY approved equal or CITY approved equal or CITY approved equal.

2.16 CHECK VALVES:

Refer to Section 15115, "Check Valves"

2.17 DOUBLE CHECK VALVE ASSEMBLIES:

Refer to Section 2.04 above.

2.18 CORPORATION STOPS

A. Corporation stops for one (1) inch services shall have AWWA thread inlet and a compressive connection outlet suitable for service pipe. Corporation stops for two (2) inch services shall be ball valves and have outside iron thread inlet and a compression connection outlet suitable for service pipe. Corporation stops shall meet AWWA C800, latest revision.
B. Corporation Stop Manufacturers or Equal:

1. Mueller
2. Ford
3. Hays Manufacturing Company

2.19 FLEXIBLE COUPLINGS

Flexible couplings shall be straight cast couplings and shall be Rockwell International No. 431, or equal.

2.20 UNION

A. Copper-to-copper union.
B. Union Manufacturers or equal:

1. Mueller H-15400
2. Hays Manufacturing Company 5615

2.21 ANGLE VALVES

Angle globe valves one (1) inch and two (2) inch diameter shall be Nibco or approved equal.

2.22 CASING PIPE

Casing pipe shall be 3-inch minimum diameter (I.D.) Schedule 80 PVC or black iron, as determined by Engineer.

2.23 METER BOXES AND VAULTS FOR WATER SERVICE

A. The Contractor shall furnish and install all meter boxes and vaults required for new and/or relocated water services. All concrete meter vaults shall be manufactured in accordance with the applicable provisions of ASTM C858, "Underground Precast Concrete Utility Structures", in accordance with the City's Standard Details and as specified herein. All materials used in the

production of the concrete meter boxes and vaults shall be new and or recent manufacture. Aggregates shall not originate in salt or brackish water areas and no calcium chloride containing admixtures shall be used.

B. Fine aggregate for concrete mixes shall consist of sand or stone screening, composed of hard durable grains, free of foreign matter such as loam, clay, dirt, organic matter or other impurities. Fine aggregate shall conform to the following gradation requirements:

Size Sieve	Percent Passing
3/8"	100
No. 4	90 to 100
No. 8	70 to 95
No. 16	50 to 85
No. 30	30 to 70
No. 50	10 to 45
No. 100	0 to 10

C. Coarse aggregate for concrete mixes shall consist of gravel, broken stone or local limerock. Coarse aggregate shall be hard, durable and free of foreign matter such as loam, clay, dirt, organic matter or other impurities. It shall be free of adherent coatings. Coarse aggregate shall conform to the following gradation requirements:

Meter Boxes

Size Sieve	Percent Passing
3/4"	100
1/2"	90 to 100
3/8"	40 to 70
No. 4	0 to 85
No. 8	0 to 5

Meter Vaults

Size Sieve	Percent Passing
1-1/2"	100
1"	95 to 100
1/2"	25 to 60
No. 4	0 to 10
No. 8	0 to 6

D. Cement shall be a standard brand of Portland cement meeting the requirements of ASTM C150-86, "Portland Cement", Type I. Different brands of cement, even if tested and approved, shall not be used.
E. The forms shall be made from of a non-porous material with smooth surfaces and shall be accurate and strong enough to maintain the structure's dimensions within one half of the allowable tolerances given in Section 3.4 of ASTM C858. Forms shall be cleaned before each use, and shall be free of paint or other protective coatings that might cling to the surface of the concrete. Releasing agents applied to the form to aid in breaking the bond shall not be injurious to the concrete. Steel reinforcing shall be securely positioned in the form to maintain the concrete cover shown on the Standard Details.
F. All reinforcing steel shall be free of rust, grease, dirt or mortar and shall be thoroughly cleaned of any such foreign matter or loose mill scale before being placed in position.

    1. Wire reinforcement shall conform to ASTM A82, "Steel Wire, Plain, for Concrete Reinforcement".
    2. Wire mesh reinforcement shall conform to ASTM A185, "Steel Welded Wire, Fabric, Plain for Concrete Reinforcement".
    3. Bar reinforcement shall conform to ASTM A615-7a, "Deformed and Plain Billet-Steel Bars for Concrete Reinforcement", Grade 60, deformed, except that steel manufactured by the Bessemer process will not be accepted.

G. Concrete mix for meter vaults:

    1. The aggregates shall be sized, graded, proportioned and thoroughly mixed in a batch mixer with proportions of cement and water that will produce a homogeneous concrete having a compressive strength of 3500 psi at 28 days of age for the boxes and plates and 3000 psi for the vaults after the same curing period.
    2. Batched concrete shall be made in standard concrete mixers only, and not in mortar boxes, wheelbarrows or similar equipment.
    3. Mixers shall be standard mechanical (power-driven) rotary type for concrete. Mixers normally used for mortar or plaster mixing will not be permitted.
    4. Concrete shall be placed either by gravity into the form at a rate such that the concrete is plastic at all times and flows readily into all parts of the form and around all reinforcement steel without segregation of materials, or by high speed pneumatic rammer resulting in dense, evenly

compacted concrete without disturbing the reinforcement. The surfaces from top to bottom shall show uniform compaction.

5. The top surface of the molded items shall be flat and finished smooth while in the mold. Capping will not be permitted. Where required by the City, corners shall be rounded.
6. Curing shall be by any method or combination of methods that will develop the required compressive strength within 28 days or less.

H. Water used in mixing concrete that is not in the form of surface moisture on the aggregate shall be from the City's water supply or other approved source.

I. The precast units may not be repaired without specific approval by the City.

J. The quality of materials, manufacturing process, and the finished units shall be subject to inspection at any time by the City, and the supplier shall afford access for this purpose, if so required.

K. Prior to installation of any of the above mentioned units, the Contractor shall furnish the Engineer, upon his request, a statement giving the following information:

1. Name of manufacturer.
2. The source and type of cement.
3. The source and specific gravities of the aggregates.
4. The concrete mix proportions, and strength at 28 days.
5. Name of admixtures, if any.
6. Mill certificates for the reinforcement steel.
7. Source of water.

L. The precast units shall be subject to reject, either at the manufacturing plant or at delivery, upon failure to conform to any of the specified requirements herein. The following imperfections shall also be cause for rejection:

1. Defects that indicate any imperfect concrete mixing and molding.
2. Surface defects such as honey-combed or open textured and damaged area which would affect the structural adequacy.
3. Repaired areas or capping.
4. Improper radius at corners or improper tolerances.

M. Water meter boxes shall be concrete, as manufactured by BROOKS PRODUCTS or City-approved equal, in the following models:

Size/Type Meter	**Model**
5/8” and 3/4” single meter	36 MB Series
5/8” and 3/4” dual meter	11-2 MB Series

1” meter	37 MB Series
1-1/2” meter	38 MB Series
2” and 3” meters	66 MB Series

2.24 METER BOX COVERS:

A. Water meter covers shall be manufactured of recycled composite plastic, RHC Rubber and a UV stabilizer material. Covers shall be ROHS compliant (Restrictions pertaining to the use of certain Hazardous Substances) not to exceed the maximum allowed levels of the following substances: lead, Mercury, Cadmium, Hexavalent Chromium, PBB and PBDE.

B. The Water Meter Covers shall be H-20 load rated, ADA compliant, non-metallic suited for radio read, and constructed with a non-skid black surface pattern. The Covers shall be sized to fit all meter boxes of the appropriate type (refer to Section 2.26 above) and be of the drop-in lid type.

C. The covers for the meter boxes shall have the words "WATER METER", plus the manufacturer's name and country of origin permanently marked on the top surface of the lid or cover for ease of identification. The letter size may range from 3/8" to 3/4" with the larger size lids or covers having the larger size letters. The letters on the lids or covers shall be slightly raised.

D. Covers shall have mating surfaces so that mating parts will not rattle or rock under traffic. The lifting eye in lids shall be ½" wide by 2 ½" long x 1" deep with the longest dimension parallel to the longest axis. Lifting pin shall be stainless steel ¼” in diameter.

E. The Water Meter Covers shall have a recessed cavity and a through hole for the installation of the electronic radio transmitters (ERT).The recessed cavity on top of cover shall have an outside diameter of 4 1/16“ While the through hole shall measure 1 ¾“ inches in diameter. ERT unit shall sit flush on top of lid after installation to prevent tripping.

Type	Length	Width
MB36	15 3/8	10 1/8
MB37	18	11 ¼
MB38	23 ¼	13 ¾
MBDual	16 ½	14 ½

F. The Covers shall come with a ten (10) year warranty and shall be replaced at no cost by the manufacturer if lid fails during the warranty period. All standard Water Meter Box Covers shall be similar to “Pentek Access Boxes” or approved equal. The above standards shall be certified by the manufacturer prior to installation. The City reserves the right to limit the weights of the items

to be furnished for ease in handling. The thickness of covers shall be consistent throughout, so that when the covers are in place the top surfaces are level with the frame of the box.

G. Contractor should be aware the City periodically checks materials supplied for conformance to these specifications, which shall include materials testing, dimensions and tolerances, component weights, markings, finish, fit and such other matters as are necessary to assure supply of products meeting City requirements. Sample tests performed during shop drawing submittals will be at the contractor's expense. If passed, it will be at the City's expense. Any re-testing due to materials not passing the tests shall be at the contractor's expense.

H. Contractor shall provide test-based certifications from the manufacturer that Water Meter Covers are not buoyant or near neutral buoyancy and that their specific gravity is 1.10 or greater. Documentation certifying the water meter box covers meets the specific buoyancy and gravity requirements must be submitted along with the six copies of shop drawings. The City shall conduct buoyancy testing procedures verifying that covers will meet the no floating and specific gravity requirements set forth in these Specifications. During the testing procedure Water Meter Covers shall sink immediately and remain submerged at the bottom of any testing reservoir filled with salt water. Samples of all water meter box covers stipulated in this bid shall be submitted upon written notification by the Department of Public Utilities. Samples will be sent for examination and testing by Department of Public Utilities and/or testing laboratory retained by the Department of Public Utilities.

2.25 TAPPING SADDLES:

Double strap tapping saddles shall be constructed of 316 stainless steel, with neoprene gaskets cemented to the saddle body, and iron pipe threads designed to withstand a working pressure of five hundred (500) psi and accurately fit the pipe for which it is intended. The straps shall be forged steel with curvature accurately designed to fit pipe. All nuts and straps including threads shall be 316 stainless steel. Tapping saddles shall be Mueller K-10509, Clow F-1280, Smith Blair, or approved equal.

2.26 DRESSER COUPLINGS:

Dresser couplings shall be regular black couplings with plain gaskets. They shall be Dresser Style 90 with no substitutions allowed. Polyethylene liner shall be used to fully encase the dresser couplings.

2.27 MEGATAPE:

Megatape and locating metal wire to be buried 18 inches below finished grade over any PVC or HDPE water mains or sewage force mains (no exceptions).

2.28 LINE STOP FITTING:

Valve cut-in on the existing water main shall be performed under pressure using line stop fittings. The body of the fittings shall be carbon steel conforming to ASTM A-36. The flange shall be steel flanges Class D, conforming to AWWA C207 with stainless steel bolts and nuts. The line stop fitting shall be manufactured by International Piping Services Company (1-407-843-2800), or equal.

2.29 FIRE HYDRANTS:

A. All fire hydrants shall be of the dry-barrel type and shall conform in design, material and workmanship to AWWA C502. Hydrants shall have five and one-quarter inch main valve opening and a three way nozzle arrangement. The connection pipe shall be ductile iron pipe conforming to AWWA C151, Class 52.
B. The depth of bury, measured from the bottom of the connecting pipe to the ground line of the hydrant shall be three feet six inches minimum. Exact depth at each location shall be determined by depth of line to which the hydrant is connected.
C. Inlet connection shall be six-inch mechanical joint. Typical installation detail is shown in the Contract drawing.
D. Two - 2-1/2 inch hose nozzles and one - 4-1/2 inch pump nozzle connection threads shall conform to NFPA No. 194 (ANSI B26) Standard for Screw Threads and Gaskets for Fire Hose Couplings.
E. Hydrants shall be furnished with accessories to include mechanical joint follower rings with set screws and at least one adjustable hydrant wrench with spanner included with every ten hydrants supplied. Barrel extension sections shall not be allowed on new fire hydrants, except by special permission from the ENGINEER.
F. There shall be no shrubbery planted within 6 feet of any fire hydrant.
G. All fire hydrants shall be Mueller Super Centurion Model A-423 or American Darling Model B84B, with no substitutions allowed.

2.30 BACTERILOGICAL SAMPLE POINTS:

A. Bacteriological sample points shall be provided in accordance to the Broward County Health Department Standard Details, Specifications Policies and Procedures for Water Distribution.

B. Sampling point shall not be removed until approval is obtained from Broward County Health Department.

2.31 FITTINGS

A. Refer to Section 15006 - Ductile Iron Pipe.
B. Refer to Section 15000 - Piping General.

Part 3 - EXECUTION

3.01 GENERAL

A. Proper and suitable tools and appliances for the safe convenient handling and laying of pipe shall be used and, in general, conform to manufacturer's recommendations. At the time of laying, the pipe shall be examined carefully for defects, and should any pipe be discovered to be defective after being laid, it shall be removed and replaced with sound pipe by the CONTRACTOR at his expense.
B. Pipe and fittings shall, at all times, be handled with great care to avoid damage. In loading and unloading, they shall be lifted with cranes or hoists or slid or rolled on skidways in such manner as to avoid shock. Under no circumstances shall this material be dropped or allowed to roll or slide against obstructions. Pipe and other material shall be distributed along the right-of-way in advance of installation only to the extent approved by the ENGINEER. Such materials shall be so placed as to keep obstruction to traffic minimum.
C. Upon satisfactory completion of the pipe bedding, a continuous trough for the pipe barrel and recesses for the pipe bells, or couplings, shall be excavated by hand digging. When the pipe is laid in the prepared trench, true to line and grade, the pipe barrel shall receive continuous, uniform support with no pressure being exerted on the pipe joints from the trench bottom.
D. Pipe shall be installed in accordance with the manufacturer's recommendation. Before being lowered into the trench, the pipes and accessories shall be carefully examined and the interior of the pipes shall be thoroughly cleaned of all foreign matter by methods acceptable to the ENGINEER. During suspension of work, for any reason, at any time, a suitable stopper shall be placed in the end of the pipe last laid to prevent mud or other foreign material from entering the pipe. Any pipe which is disturbed or found defective shall be immediately removed and replaced with sound pipe.
E. Lines shall be laid straight.
F. Any work within the pipe and fittings shall be performed with care to prevent damage to the interior wall of the pipe. Damaged interior walls shall be

repaired or the pipe section or fitting replaced as required by the ENGINEER. No cables, lifting arms, hooks or other devices shall be inserted into the pipe or fitting. All lifting, pulling or pushing mechanisms shall be applied to the exterior of the pipe or fitting.

G. After pipe has been laid, reviewed and found satisfactory, sufficient backfill shall be placed along the pipe barrel to hold the pipe securely in place during the conduction of the required tests.

3.02 HYDRANT INSTALLATION

A. All fire hydrants shall be installed in strict accordance with the manufacturer's published recommendations, AWWA Standards, and all applicable codes, and the applicable provisions of this Section. All installations shall be to the satisfaction of the local fire and building department.

B. New fire hydrants and branch runs shall be installed by the Contractor where shown on the Plans and in accordance with the Standard Details herein. Installation of a new fire hydrant shall include excavation, installation of the branch run, installation of the hydrant on the branch run, the concrete anchor at the hydrant elbow, protective concrete slab in non-sidewalk areas, replacing concrete sidewalk when in sidewalk area; steel posts filled with concrete, where required; plastic warning posts where required in FDOT right of way; backfilling and compaction. Fire hydrants shall be touched up or repainted with paint, as specified, where necessary, and the same type of paint shall be used to paint the guard posts after treating the galvanized surface with a neutralizer.

C. All hydrants isolating valves with slip joints, friction type, or caulked joint connections shall be harnessed to the main pipe by means of welded steel harness sets, or clamps and steel rods, designed for this purpose. Dry barrel fire hydrants shall be set on a bed of pea gravel not less than 18 inches deep and 3 feet square, for drainage, or as required by local regulations and conditions.

D. All 6-inch valve additions can be performed with partial-localized system isolation with the approval of the ENGINER and proper notifications/coordination with the City (i.e. 48 hours minimum prior notice).

E. Existing concrete thrust blocks shall be removed.

F. Restrained joints shall be placed at all joints of fire hydrant and pipe connections.

3.03 INSTALLATION OF WATER SERVICES

High Density Polyethylene (HDPE) Pipe with Standard Outside Dimension Radio (DR) of 9 shall be used for water services ≤ 3”

A. Up to 2-inch diameter (galvanized steel is no longer used). Water services (single and dual) are going to be provided to connect proposed water meters and also to reconnect the existing water meters that remain in place. All HDPE services require the use of a 10 gauge stranded copper blue tracer wire.
B. 2-Inch Services: Services from the new WMs shall consist of corporation stops, 2-inch HDPE tubing, curb stops and terminal fittings as shown in the City of Hollywood Standard Details. The services shall be installed where designated in the field by the Engineer, and will be determined as soon as possible in order that the Contractor may tap the mains as they are installed. All meter boxes shall be installed in non-traffic and non-parking areas.
C. Where meter boxes are located in existing sidewalks, the whole flag of sidewalk shall be removed and replaced with new concrete. The concrete walk shall be 4 inches thick and finished with the proper tools and techniques to resemble the existing walk. The concrete support for meter boxes shall be eliminated when the box is installed in an existing sidewalk. Where meter boxes are located out of sidewalk areas, a concrete support is required. Concrete supports shall be to the established line and grade. Construct a 3'x3'x6"-thick concrete slab for non-sidewalk conditions. Meter boxes shall be set flush with the finished grade if inside walks, or with the top of the ground if out of sidewalk areas. All bends in copper tubing shall be made with an approved type tube bender to the satisfaction of the Engineer. Flattened, out of round or kinked tubing will not be permitted. Each 1-inch service connection to be installed on this Project will be one of the following:
D. Short Single - Consisting of a short run of 1-inch HDPE tubing from the main on the same side of the street as the proposed meter, to the meter installation approximately 2 1/2 feet from property line. Single meter box installation included.
E. Long Single – Consisting of 2-inch diameter HDPE tubing connected to a main on the opposite side of the street from the proposed/existing meter, requiring additional HDPE tubing to cross the street to the meter installation, and requiring a 3-inch (min. I.D.) Schedule 80 PVC or black iron casing pipe, to be installed under the street pavement 1 & 18" past EOPON both sides. Single meter box installation included.
F. Short Dual - Consists of a run of 2-inch HDPE tubing from the main on the same side of the street as the proposed meter, to the meter about 2 1/2 feet from property line. Includes installation of two (2) single meter boxes or double meter box with brass yoke, and all fittings needed to split the service line.
G. Long Dual - Same as above but from a main on the opposite side of the street from the meter, requiring additional HDPE tubing to cross the street to the meter installation, and requiring a 3-inch (min. I.D.) Schedule 80 PVC or black

iron casing pipe, to be installed under the street pavement & 18” past the edge of pavement on each side. Includes installation of two (2) single meter boxes or double meter box with brass yoke.

3.04 INSTALLATION OF METER BOXES AND METERS

A. Meters and meter boxes or vaults shall be installed by the CONTRACTOR as shown on the plans. Finish grade of completed meter enclosure shall be flush with existing ground or as shown otherwise. Meter boxes or vaults shall be set or constructed plumb with the top set to conform to the slope of the finish grade. Lightly compacted earth backfill shall be placed inside of the meter boxes to depth indicated. Grade adjustment of the meter boxes or vaults shall be by using standard extension sections for the box or vault specified. Install meter in a horizontal position with the meter dial or dials at a depth below the cover as shown on the plans. Backfill around meter vaults as specified for adjoining pipe.
B. Water meters shall be reinstalled by the CONTRACTOR. Corporation stops shall be in the open position and angle stops shall be closed, prior to reinstallation of the meter.
C. Withhold reinstalling meters until the new water system is ready for operation. The remainder of the service connection, excluding the meter, may be installed at any time during or after construction of the main.
D. Where existing meters are designated for relocation, contractor shall read, record, and submit existing meter readings on the form supplied by the City prior to removal of meters, and after completion of relocation work. Contractor shall furnish ENGINEER and City with copies of all meter readings on a monthly basis or as requested by the ENGINEER.

3.05 TESTING AND DISINFETION OF WATER MAIN LINES

Refer to Section 15995 - Pipeline Testing and Disinfection.

3.06 TESTING AND DISINFETION OF WATER SERVICE LINES

Refer to Section 02515 – Water Service Connections and Transfers.

- END OF SECTION -

SECTION 15060

PIPING AND FITTINGS

Part 1 - GENERAL

1.01 SCOPE

A. The work included in this section consists of furnishing all material, equipment and labor, and performing all operations necessary for the complete installation of all piping, fittings and accessories within the limits of work, as shown on the drawings and specified herein.
B. Where references are made to other standards or codes, unless specific date references are indicated the latest edition of said standard or code shall govern.

1.02 WORK NOT INCLUDED UNDER THIS SECTION

A. Piping installation for various types of piping systems is specified within various other sections herein. Installations specified in this section are supplementary to those sections and in the case of conflict the more stringent condition shall prevail.

1.03 RELATED SECTIONS

A. Section 01300 - Submittals
B. Section 15000 – Piping General
C. Section 15001 – Water Service and Miscellaneous Fittings
D. Section 15995 - Pipeline Testing and Disinfection
E. All sections specifying various types of valves.

1.04 PIPING LAYOUT

Field-verify dimensions prior to preparation of layout and shop drawings. Obtain shop drawing approval prior to fabrication of piping. All items not specifically mentioned in the Specifications or noted on the approved Plans, but which are obviously necessary to make a complete working installation shall be included.

1.05 DELIVERY, STORAGE AND HANDLING

A. During shipping, delivery and installation of pipe and accessories, handle in a manner as to ensure a sound undamaged condition.
B. Exercise particular care not to injure pipe coatings.

Part 3 - PRODUCTS

3.01 PIPE AND FITTINGS: DUCTILE IRON

A. GENERAL

1. In accordance with the “Reduction of Lead in Drinking Water Act” (Act) enacted by the USEPA on January 4, 2011, effective January 4, 2014 all piping, fittings, fixtures, valves, and other appurtenances used in potable water supply and distribution systems shall be “lead free” as defined in Section 1417(d) of the Safe Drinking Water Act (SDWA). All requirements of the Act as it relates to the products under this section shall be strictly adhered to.
2. As used herein, "ANSI" denotes the American National Standards Institute, "AWWA" denotes the American Water Works Association, and "ASTM" denotes the American Society for Testing and Materials.
3. All pipe and fittings to be furnished hereunder shall be manufactured in the United States, and shall conform to the referenced ANSI and/or AWWA Standard as modified herein, as appearing in the following sections.
4. All markings required on pipe and fittings, shall be clearly legible and located such that they will not be hidden or destroyed when assembled into the intended system.

B. PIPE

1. All pipe shall be ductile iron pipe conforming to ANSI/AWWA Standard C151/A21.51, "Ductile-Iron Pipe, Centrifugally Cast, for Water". All pipe and fittings for water applications shall be in full compliance with ANSI/NSF 61, "Drinking Water System Components-Health Effects". Manufacturers shall maintain their NSF certification for the duration of the Contract and any extensions thereof.
2. Wall Thickness:

   (a) Buried push-on, mechanical, and restrained joint pipe shall have a wall thickness class in accordance with ANSI A21 .51 equal to or greater than classes indicated below

Buried Pipe Size	Class
4” - 12”	52
14” - 54”	52
60” – 64”	Pressure Class 150

3. All flanged, grooved pipe shall have a wall thickness class in accordance ANSI A21.15 (AWWA C115) and be rated at 250 psi working pressure. The nominal thickness of pipe 6-inch and larger shall not be less than those shown in Table 15.1 of ANSI C115. The nominal thickness of 4-inch pipe shall be ANSI C151 Class 54.
4. For restrained joint pipe, the thickness of the pipe barrel remaining after grooves are cut, if required in the design of restrained end joints, shall not be less than the nominal wall thickness of equal sized non-restrained joint pipe as shown above.
5. Each piece of pipe shall be marked as required in Subsection 4.7 of AWWA C151-02. Letters and numerals on pipe sizes 12-inch and smaller shall be not less than 3/8-inch.
6. The Department of Public Utilities absolutely reserves the right to require the use of higher thickness or pressure class pipe in applications where in the opinion of the Engineer (i.e., the Director of the Department of Public Utilities or his representative) such use is in the best interest of the City. The Engineer's decision in this regard shall be final.
7. A sufficient quantity of non-toxic vegetable soap lubricant shall be supplied with each shipment of pipe. The soap lubricant shall be suitable for use in subaqueous trench conditions.
8. For flanged ductile-iron pipe with integrally cast flanges or threaded flanges, the nominal wall thickness of the pipe barrel shall be as specified in Section D, "Joints and Accessories", under "Flanged Joints", herein below.
9. The single gasket push-on pipe shall be shipped in standard 18-foot or 20-foot lengths, but not both. The restrained single-gasket push-on joint pipe shall be shipped in standard 18 or 20-foot lengths as specified above or fabricated lengths as noted in each order. At least two lengths of each size of single gasket push-on pipe furnished under each order shall be tested with circumferential gauges to insure that the pipe may be cut at any point along its length and have an outside diameter which will be within the manufacturer's standard design dimensions and tolerances for plain pipe. These lengths shall be identified with an easily distinguished, painted marking, longitudinally along the full length of the pipe.

C. FITTINGS

1. Fittings Conforming with ANSI/AWWA C110/A21.10-12 (Water & Sewer Use) - Restrained push-on joint fittings shall be cast ductile iron for use with ductile-iron pipe as specified above. Standard mechanical joint, push-on joint and flanged joint fittings shall also be ductile iron for use with

ductile iron pipe as specified above. Cast ductile iron fittings in the 3-inch through 24-inch size range shall be pressure rated at 350 psi, minimum; (except flange-joint fittings shall be rated at 250 psi, minimum); and in the 30-inch through 48-inch size range shall be pressure rated at 250 psi, minimum. All fittings with mechanical joints, flange joints and push-on joints shall conform to ANSI/AWWA Standard C110/A21.10-98, "Ductile Iron and Gray Iron Fittings, 3-inch Through 48-inch, for Water and Other Liquids". In addition, fittings with mechanical joints and push-on joints shall conform to ANSI/AWWA Standard C111/A21.11-00, "Rubber-Gasket Joints for Ductile Iron Pipe and Fittings".

The weight of fittings shall be as given in ANSI/AWWA C110/A21.11-98 for ductile-iron fittings. The weight of mechanical joint fittings shall be as established in Tables 3 through 12. The weight of flanged joint fittings shall as established in Tables 13 through 20.

2. Fittings Conforming with ANSI/AWWA C153/A21.53-00 (Water & Sewer Use) - All fittings shall be cast ductile-iron for use with ductile-iron pipe as specified above. Fittings in the 3-inch through 24-inch size range shall be pressure rated at 350 psi minimum; 30-inch through 48-inch size range shall be pressure rated at 250 psi minimum; and in the 54-inch through 64-inch size range shall be pressure rated at 150 psi minimum (except for those fittings such as plugs, caps and sleeves which are normally rated at a higher pressure). No flanged fittings or mixtures of flanged with other end type fittings will be allowed in the range of 3-inch through 48-inch since they are not covered in the AWWA Standard. Flanged fittings conforming with and covered by this standard are allowed in sizes 54, 60 and 64-inch. In conformance with the standard, 54, 60 and 64-inch flanged tees, crosses and reducers with outlets of smaller dimension as listed in ANSI/AWWA C153/A21.53-00 are permitted. All fittings with mechanical joints, flange joints and push-on joints shall conform to ANSI/AWWA Standard C153/A21.53-00, "Ductile-Iron Compact Fittings for Water Service". In addition, fittings with mechanical joints and push-on joints shall conform to ANSI/AWWA Standard C111/A21.11-00, "Rubber-Gasket Joints for Ductile-Iron Pressure Pipe and Fittings" except as otherwise allowed in C153. Mechanical joint glands shall be ductile-iron only.

   Since the C153 Standard provides only minimum dimensions, fully detailed drawings of all fittings proposed shall be supplied by the manufacturer with his bid. The tabulated nominal weight of each size and

type of fitting shall also be supplied by the manufacturer for all items proposed. This weight shall be that of the bare casting prior to application of any lining or coating. The weight of a fitting supplied under the contract shall not be less than ninety-five (95) percent of the tabulated nominal weight supplied by the manufacturer's catalog literature for that fitting. Further, the weight of fittings supplied shall not be more than five (5) percent above the same tabulated nominal weight.

D. JOINTS AND ACCESSORIES

1. Push-On Type Joints (Single Gasket and Single Gasket with Gasket Restraint) - Push-on joints shall conform to ANSI/AWWA Standard C111/A21.11-12, except that the gaskets for pipe and fittings shall be neoprene where so specified.

   The required number of gaskets for each push-on joint pipe plus one extra for every 50 joints or fraction thereof, shall be furnished with each order. The gaskets shall be shipped in suitable protective containers. All single-gasket pipe shall be as manufactured by United States Pipe and Foundry Company (Tyton), by the American Cast Iron Pipe Company (Fastite), by McWane, Inc. (Mix of Tyton and Fastite), Tyler/Union (Tyton) or approved equal.

   Push-on joints together with both their regular and gasket-restraint gaskets shall be of the design, dimensions and tolerances of either those provided by American Cast Iron Pipe Company (Fastite/Fast-Grip) or those provided by United States Pipe and Foundry Company (Tyton/Field Lok). No other designs shall be acceptable. If required by the City of Hollywood Department of Public Utilities, the Vendor shall supply complete design drawings with dimensions, tolerances and materials of the joint and gasket being supplied within fourteen (14) calendar days of the date of receipt of the letter, fax or E-mail requiring said submission. If so required by the Department of Public Utilities, this submission shall be signed, sealed and dated by an Engineer registered to practice in the State where the manufacturer is located.

2. Mechanical Joints - Mechanical joints for fittings shall conform to ANSI/AWWA Standard C111/A21.11-12, except that the gaskets for each fitting under Groups D and D1 shall be neoprene. Bolt holes for mechanical joints shall be equally spaced, and shall straddle the vertical

centerline. Tee head bolts and hexagonal nuts for all mechanical joints in fittings shall be of high strength low-alloy steel with composition, dimensions and threading as specified in ANSI/AWWA Standard C111/A21.11-00. Glands shall be of ductile-iron construction for ductile iron fittings, and cast gray iron or ductile iron for cast gray-iron fittings.

The proper number of gaskets, glands, bolts and nuts, all conforming to ANSI/AWWA Standard C111/A21.11-00, plus one extra gasket for every 10 joints or fraction thereof, shall be furnished with each order. The gaskets and joint accessories shall be shipped in suitable protective containers. Follower glands held in place with set screws will not be acceptable. Segmented glands will not be acceptable.

3. Mechanical Joint and Push-on Joint “Megalug®”-type Restraining Systems
Use of this type of restraint is restricted to underground mechanical joint or push-on joint applications, and in general may not be used above grade or as a substitute for flanged joints. Any above grade applications will require submission of shop drawings of the piping system where they are utilized and may require design by a Florida registered Professional Engineer.

This type of restraint may be utilized as dictated by design and/or field conditions in any mechanical joint or push-on joint underground piping system of 30-inch nominal diameter and smaller. The prior written permission of the Engineer is required for diameters of 36, 42 and 48-inch. In instances where written permission cannot be immediately obtained, verbal permission will be allowed but is to be confirmed in writing on the first business day following the substitution. If this type of restraint is used without permission or if permission is denied, the Contractor making the substitution shall be solely responsible for all costs, both direct and indirect, of immediately correcting the restraint system to the satisfaction of the Engineer.

It is recognized that flange adapters of this type form a useful tool for adjusting lengths of flanged pipe runs in instances such as runs with a large number of deflections where it is almost impossible to predict all lengths correctly. Therefore, a very restricted number of these joints will be allowed in instances where it can be clearly shown to the satisfaction of the Engineer that they are necessary. This application is restricted to 20-inch nominal diameter and below. Further, this use shall be designed in and shall not be made as a field substitution. In all instances flange

adapters shall be rated for a minimum working pressure of 250 psi with a minimum safety factor of 2:1. In no case will these flange adapters be used as a general substitute for standard flanged joints.

The Department of Public Utilities absolutely reserves the right to require other forms of restraint and/or thrust anchoring where, in the opinion of the Engineer, the use of this form of restraint is not in the best interest of the City. In this regard, the Engineer's decision shall be final.

The "Megalug®" joint-restraint systems manufactured by EBAA Iron, Inc., of Eastland Texas, will be considered the standard of quality for the purpose of evaluating substitute systems. Any entity offering a substitute system for consideration shall demonstrate to the complete satisfaction of the Engineer that their restraint system has been in use for a minimum of three years in the United States, and shall bear the entire burden of providing all material, documentation and performance testing data to prove substantial equivalence of their restraint system to the "Megalug®" system.

Each thrust-resistant mechanical joint or push on joint made up with this type of restraint and the pipe and fitting of which it is a part, shall be designed to withstand an axial thrust from an internal pipeline pressure of at least 150 psi at bulkhead conditions without reduction because of its position in the pipeline nor for support from external thrust blocks.

This type of joint restraint shall not be used above grade except as previously specified nor shall it be used as a carrier pipe within a casing. This type of restraint shall not be used with tape wrapped pipe or with too great a coating thickness on the exterior of the pipe.

4. Restrained Push-on Joints (Single Gasket Non-Gasket Restrained) - Restrained joints in pipe and fittings shall be of the single gasket push-on type, and shall conform to all applicable provisions of ANSI/AWWA Standard C111/A21.11-12, except that gaskets for pipe and fittings shall be neoprene, where so specified, and the following requirements:

   (a) Thickness of the pipe barrel remaining at grooves cut, if required in the design of restrained end joints, shall not be less than the nominal wall thickness of equal sized non-restrained pipe as specified in Section B above.

(b) Restrained joints using field welding, set screws, or gaskets with expanding metal inserts will not be acceptable.

(c) The restraining components, when not cast integrally with the pipe and fittings, shall be ductile iron or a high strength non-corrosive alloy steel.

(d) Tee head bolts and hexagonal nuts for all restrained joints in pipe and fittings shall be of high strength low-alloy steel with composition, dimensions and threading as specified in ANSI/AWWA Standard C111/A21.11-12, except that the length of the bolts shall meet the requirements for the restrained joint design.

(e) The proper number of gaskets, bolts, nuts and all necessary joint material, plus one extra gasket for every 10 joints or fraction thereof, shall be furnished with each order. The gaskets and joint accessories shall be shipped in suitable protection containers.

(f) Each thrust-resistant joint, and the pipe and fitting of which it is a part, shall be designed to withstand the axial thrust from an internal pipeline pressure of at least 150 psi at bulkhead conditions regardless of its position in the pipeline and regardless of it being supported by external thrust blocks.

(g) Restrained push-on joint pipe and fittings shall be capable of being deflected after assembly. During deflection, all components in the restrained system shall be in contact to provide an equal force on all contact areas.

(h) When restrained spigot ends are ordered for items of Group A, the corresponding bell ends of the pipe to be restrained (also within Group A), shall be furnished with the required matching restraining features at no additional cost other than the price bid per foot of pipe.

5. Flanged Joints - Connecting pieces with one end flanged and the other end either plain-end or mechanical joint, shall conform to ANSI/AWWA Standard C110/A21.10-12. Joint material for both the flanged end and the mechanical joint accessories for connecting pieces with a mechanical joint end shall be furnished as specified.

   Flange adapters shall be used only on a restricted basis and shall not be used as a general substitute for regular flanged joints. Further, the Department of Public Utilities absolutely reserves the right to require regular flanged or other types of joints when it is considered in the City's best interest. The decision of the Engineer shall be final in such situation.

Flanges shall be made of ductile iron conforming to ASTM 536. Flange shall be restrained by a number of individual gripping wedges operated by torque-limiting actuating screws. Each flange adapter shall have a permanently cast in identification number allowing tracing of the date, foundry and pour that fabricated the unit together with all test data for the material of the pour. Records for this purpose shall be retained by the foundry for a minimum of two years after the pour date and shall be supplied to the City within no more than two weeks after request. Factor of safety shall be a minimum of 2 to 1.

Other types of flanged fittings and flanged-joint pipe shall conform to the following requirements unless otherwise stated in the order:

(a) Flanged fittings shall conform to ANSI/AWWA Standard C110/A21.10-12, as specified hereinabove.
(b) Flanged ductile-iron pipe with integrally cast flanges shall be manufactured in accordance with ANSI/AWWA Standard C151/A21.51-09, and with provisions contained hereinabove for centrifugally cast ductile iron pipe, and shall be furnished with ANSI Standard Class 125 flanges, plain-faced and drilled, conforming to ANSI Standard B16.1, "Cast Iron Pipe Flanges and Flanged Fittings", latest revision. Hollow back flanges are not acceptable.
(c) Flanged ductile-iron pipe with threaded flanges shall be manufactured in accordance with ANSI/AWWA Standard C115/A21.15-11, "Flanged Ductile-Iron Pipe With Ductile-Iron or Gray-Iron Threaded Flanges", and shall be rated for a working pressure of 250 psi, minimum. The nominal thickness of flanged ductile-iron pipe 6-inch diameter and larger shall not be less than those shown in Table 1 of ANSI/AWWA Standard C115/A21.15-11. The nominal thickness of 4-inch diameter flanged ductile-iron pipe shall be Class 54 (min.) conforming to Tables 3 and 4 of ANSI/AWWA Standard C151/A21.51-02. The pipe shall be furnished with ANSI Standard Class 125 flanges, plain-faced and drilled, conforming to ANSI Standard B16.1, latest revision. Hollow back flanges and grey-iron flanges shall not be acceptable for use as threaded flanges. Threaded flanges shall be individually fitted and machine tightened on the threaded pipe by the manufacturer, and shall not be interchangeable in the field. Pipe lengths shall be as ordered. Removal of flanges, cutting and re-threading the pipe, and re-installing the flanges will not be permitted in any case.
(d) All flanges on ductile-iron pipe and fittings shall be of ductile iron. All joint materials for flanged pipe and fittings shall be supplied with all

pipe or fittings ordered. Bolts and nuts shall comply with all requirements of Appendix Section A.1 of ANSI/AWWA Standard C115/A21.15-99, except that both shall be stainless steel. Unless ring gaskets are specifically called for in the order, gaskets shall be full-faced and 1/8-inch thick. Gaskets shall fully conform to the requirements of ANSI/AWWA Standard C115/A21.15-99, Appendix Section A.2, except that gaskets shall be SBR for water and neoprene for sewer usages.

E. LININGS AND COATINGS

Asphaltic Coating

All ductile iron pipe and fittings shall be outside-coated with an asphaltic material applied by means of the airless spray method. The exterior coating shall meet AWWA Specifications for this type of coating, shall be smooth without pinholes, thin, bare or overly thick areas. Smoothness shall be such that when hand rubbed, no “sand paper” feeling will be experienced and such that the spigot area will readily slide through the gasket without pulling, tearing, rolling or otherwise disturbing the sealing capabilities of the gasket. Spigot ends shall be beveled prior to painting and to an extent that will permit ready insertion of the spigot through the gasket area.

Cement-Mortar Lining

Ductile iron pipe and fittings where so specified shall be cement-lined and seal-coated in accordance with ANSI/AWWA Standard C104/A21.4-13, "Cement-Mortar Lining for Ductile-Iron Pipe and Fittings for Water".

Ceramic Epoxy Lining and Polyethylene Lining

Pipe and fittings where so specified shall be lined with either ceramic epoxy or virgin polyethylene. A Vendor may supply one or the other material but not both in the same order.

All sewer pipe and fittings of 4-inch nominal diameter and above, except for riser pipe for valves, shall be lined with either ceramic epoxy lining or virgin polyethylene. Polyethylene shall be compounded with carbon black to resist exposure to ultraviolet rays during open-air storage, and shall comply with ASTM Standard ASTM D4976-12a, "Polyethylene Plastics Molding and

Extrusion Materials". Ceramic epoxy shall contain pigmentation to resist ultraviolet exposure under the same conditions.

Ceramic Epoxy Lining

1. All ductile iron pipe and fittings shall be delivered to the application facility without asphalt, cement lining or other lining on the interior surface or the first 6 inches on the spigot end of the pipe exterior.
2. The only ceramic epoxy material approved by the Department of Public Utilities at this time is Protecto 401™ Ceramic Epoxy, manufactured by Induron Coatings, Inc., of Birmingham, Alabama. Any request for substitution must be accompanied by:

   (a) A successful history of lining pipe and fittings for sewer service
   (b) A statement from the manufacturer concerning recoatability and repair to the lining
   (c) A test report verifying the following properties and a certification of the test results:

      (1) Permeability rating of 0.00 when tested according to Method A of ASTM E96-66, "Test Method for Water Vapor Transmission of Materials", Procedure A with a test duration of 30 days.
      (2) The material shall be an amine cured novolac epoxy containing at least 20% by volume of ceramic quartz pigment.
      (3) An abrasion resistance of no more than 3 mils (.075 mm) loss after one million cycles using European Standard EN 598 (1994), Section 7.8, “Abrasion Resistance”.
      (4) The following tests must be performed on coupons from factory-lined ductile iron pipe:
         i) ASTM B-117 Salt Spray (scribed panel) - Results to equal no more than 0.0 undercutting after two years.
         ii) ASTM G95 Cathodic Disbondment 1.5 volts @ 77°F - Results to equal no more than 0.5mm undercutting after 30 days.
         iii) Immersion testing rated using ASTM D714-87
            a. 20% Sulfuric Acid - No effect after two years.
            b. 140°F 25% Sodium Hydroxide - No effect after two years.
            c. 160°F Distilled Water - No effect after two years.
            d. 120°F Tap Water (scribed panel) - 0.0 undercutting after two years with no effect.

iv) ASTM G-22 90 - Standard practice for determining resistance of synthetic polymeric materials to bacteria. The test should determine the resistance to growth of Acidithiobacillus Bacteria and should be conducted at 30°C for a period of seven days on a minimum of 4 panels. The growth must be limited only to trace amounts of bacteria.

3. Application - Ceramic epoxy lining shall be applied by a competent firm with a successful history of applying linings to the interior of ductile iron pipe and fittings, following the following procedures:

(a) Surface Preparation - Prior to abrasive blasting, the entire area which will receive the protective compound shall be inspected for oil, grease, etc. Any areas where oil, grease or any substance which can be removed by solvent is present shall be solvent cleaned using the guidelines outlined in SSPC-1 Solvent Cleaning. After the surface has been made free of grease, oil or other substances, all areas to receive the protective compounds shall be abrasive blasted using compressed air nozzles with sand or grit abrasive media. The entire surface to be lined shall be struck with the blast media so that all rust, loose oxides, etc., are removed from the surface. Only slight stains and tightly adhering annealing oxide may be left on the surface. Any area where rust reappears before coating must be re-blasted to remove all rust.

(b) Lining - After the surface preparation and within 8 hours of surface preparation, the interior of pipe and fittings shall receive a minimum forty (40) mils dry film thickness of the protective lining. No lining shall take place when the substrate or ambient temperature is below 40°F. The surface also must be dry and dust free. If flange ends are included in the Project, the linings must not be used on the face of the flange; however, full face gaskets must be used to protect the ends of the pipe. The 40-mil system shall not be applied in the gasket grooves.

(c) Coating of Gasket and Spigot Ends - Due to the tolerances involved, the gasket area and exterior of the spigot end up to 6 inches back from the end of the spigot must be coated with Protecto Joint Compound of six 6-mil minimum, 10-mil maximum. This coating shall be applied by brush to ensure coverage. Care should be taken that the coating is smooth without excess buildup in the gasket groove or on the spigot end. All material for the gasket groove and spigot end

shall be applied after the application of the lining as specified in the preceding paragraph.

(d) Number of Coats - The number of coats of lining material applied shall be as recommended by the lining manufacturer. However, in no case shall this material be applied above the dry thickness per coat recommended by the lining manufacturer in printed literature. The time between coats shall never exceed that time recommended by the lining material manufacturer. No material shall be used for lining which is not indefinitely recoatable with itself without roughening the surface.

(e) Touch-Up and Repair - Protecto Joint Compound shall be used for touch-up or repair. Procedures shall be in accordance with manufacturer's recommendations.

4. Sealing Cut Ends and Repairing Field Damaged Areas:

(a) Remove burrs caused by field cutting of ends or handling damage and smooth out the edge of the lining if rough.

(b) Remove all traces of oil, grease, asphalt, dust, dirt, etc.

(c) Areas of loose or damaged lining associated with field cutting the pipe shall be repaired, if approved by the Engineer, as recommended by the pipe manufacturer. The damaged area shall be stripped back by chiseling or scraping about 1 to 2 inches into the well-adhered lining before patching.

(d) The exposed metal and the 1 to 2-inch lining overlap shall be roughened with a coarse grade of emery cloth (#40 grit), rasp or small chisel. Avoid wire brushing or similar buffing since these tend to make the surface too smooth for good adhesion.

(e) With the area to be sealed or repaired absolutely, clean and suitably roughened, apply a coat of Protecto Joint Compound by brush in accordance with the manufacturer's recommendations.

5. Inspection and Certification

(a) Inspection:

(1) All ductile iron pipe and fitting linings shall be checked for thickness using a magnetic film thickness gauge. The thickness testing shall be done using the method outlined in SSPC- PC-2 Film Thickness Rating.

(2) The interior lining of all pipe and fittings shall be tested for pinholes with a nondestructive 2,500 volt test.
(3) Each pipe joint and fitting shall be marked with the date of application of the lining system and with its numerical sequence of application on the date.

(b) Certification

The pipe or fitting manufacturer must supply a certificate attesting to the fact that the applicator met the requirements of this specification, and that the material used was as specified, and that the material was applied as required by the specification.

Polyethylene Lining

1. The polyethylene shall be fused to the pipe and fittings with heat to form a tightly bonded uniform lining 40 mils thick, minimum, extending from the spigot end to the gasket seat in the bell of push-on, restrained push-on and mechanical type joints.
2. Prior to preheating the pipe, 75% or more of the high-temperature oxide film shall be removed through proper preparation of pipe interior surface. Fittings shall be sand blasted. Pipe and fittings shall be uniformly preheated to a temperature adequate to provide uniform fusing of the polyethylene powders and proper bonding to the interior of the pipe and fittings.
3. The lining at the ends (spigot and bell) shall be hermetically sealed with a coal-tar epoxy. This epoxy shall coat the inside of the bell of both pipe and fitting as well as the last six inches on the inside of the spigot end of the pipe and two to three inches on the outside of the spigot end.
4. The lining of all pipe and fittings shall be subjected to and pass a test for pinholes, bare spots, metal particles, insufficient lining thickness and other defects by a method conforming to ASTM Standard G62-87 (1998), "Holiday Detection in Pipeline Coatings", Method B (high voltage). Other test methods may be submitted to the City for approval, but no approval will be granted unless it is clearly shown to the satisfaction of the City that the method is equivalent to the specified tests insofar as detecting defects and insufficient lining thickness.
5. The manufacturer shall provide certifications on the “Holiday” test as well as certifications on a uniform (spigot end to gasket seat in bell) minimum 40-mil-thick lining.

F. QUALITY ASSURANCE

1. All piping, fittings and other materials supplied under this contract shall be subject to inspection while still on the delivery truck. It is the sole responsibility of the vendor and supplier to make prior contact with the Department of Public Utilities and provide a minimum of 48-hours prior notice of delivery. When so notified, the City will make arrangements for inspection of the material upon arrival or within a reasonable time thereafter. Material will not be unloaded without inspection taking place either prior to, or if necessary for examination, during the unloading procedure. The City will not be responsible for any delays or additional costs created by non-compliance with the requirement for prior notification or the requirement for thorough inspection.
2. Materials shall be delivered in complete compliance with the AWWA Standards as modified herein, without damage, and shall match or exceed the quality of any samples supplied. The City absolutely reserves the right to require samples of any material supplied and to perform whatever tests considered by the Engineer, whose decision shall be final, to be in the City's best interest on said samples. Where such tests are of a destructive nature, the sample, if it passes the test will be paid for (at cost as shown by invoice) by the City. Samples failing will be immediately replaced with suitable material at the supplier's/contractor's expense. Samples required prior to order as a condition for purchase or as a materials submittal for approval will be at the supplier's/contractor's expense but, if approved and not used for destructive tests, may be used in the work with permission from the Engineer.
3. Materials found to be defective, not in strict compliance with the quality standards of samples supplied or these specifications shall be immediately returned to the vendor at his expense. If defects are discovered at a later time, the vendor shall be required to remove said items and shall bare all costs for so doing together with any replacement costs. Rejection of items may subject the vendor to liquidated and/or actual damages as specified elsewhere herein.
4. Foundries supplying materials shall maintain their metallurgical records for a minimum period of two years after fabrication and firms not doing so may be found in default.
5. Flaws which provide cause for rejection include but are not limited to:

    (a) Incorrect metallurgy or metallurgy which cannot be verified to the complete satisfaction of the Engineer

(b) Foundry identification/location, size, pressure and material identification information lost, removed, non-existent, or not visible when assembled
(c) Not in complete compliance with all applicable AWWA and NSF standards and requirements as modified herein and/or these specifications
(d) Not in complete compliance with approved shop drawings
(e) Incorrect, rough, chipped, cracked, scratched, flawed or otherwise damaged interior or exterior coatings or linings
(f) interior or exterior coatings which are too thin, or too thick to allow proper assembly, or too thick to allow proper grip by restraining gaskets or other restraining elements
(g) Pin holes or honey combing of pipe
(h) Weld spatter or excess metal in gasket grooves or the whole of the bell area
(i) Bell areas which are distorted or otherwise improperly cast
(j) Spigots which are out of round, not of proper dimension, or not beveled to an extent that will allow easy assembly of the pipe joint
(k) Gaskets which are defective or of the wrong material
(l) Lack of joint materials, improper or defective joint materials
(m) Bolting of the wrong material or size
(n) Electro-galvanizing or other exterior plating when hot-dip galvanizing is required
(o) Non-timely or non-submittal of all required certifications, incorrect/incomplete certifications, or certifications lacking the signature, date and seal of a professional engineer when so required
(p) Flanges which are too thin, not a right angles to the pipe centerline, or otherwise distorted
(q) All other flaws or defects which, in the opinion of the Engineer who's decision shall be final, adversely affect the assembly and/or function of the piping system as intended.

3.02 PIPE AND FITTINGS: POLY VINYL CHLORIDE (PVC)

A. TYPE PSM SDR-35 and SDR-26 PVC SEWER PIPE AND FITTINGS

1. Type PSM SDR-35 and SDR-26 PVC Sewer Pipe

(a) Type PSM SDR-35 and SDR-26 PVC Sewer Pipe for sewer mains and laterals shall conform to ASTM Standard D3034, "Standard

Specification for Type PSM Poly(Vinyl Chloride) (PVC) Sewer Pipe and Fittings", except as modified below.

(b) Pipe shall be made of PVC plastic having a cell classification of 12454-B, 12364-B, 12364-C or 13364-B as defined in ASTM Standard D1784, "Specification for Rigid Poly (Vinyl Chloride) (PVC) Compounds and Chlorinated Poly (Vinyl Chloride) (CPVC) Compounds".

(c) The PVC compounds used in the manufacture of the gravity sewer pipe shall be as listed in the Plastic Pipe Institute (PPI) Technical Report TR-4.

(d) The PVC pipe shall be push-on type, with bells, spigots and elastomeric gaskets, in accordance with ASTM Standard D3034, and in accordance with ASTM Standard D3212, "Specification for Joints for Drain and Sewer Plastic Pipes Using Flexible Elastomeric Seals", except as otherwise modified herein. The gaskets shall be the sole element depended upon to make the joint flexible and watertight. Joints using solvent cement will not be permitted. The pipe bells shall have an annular recess or race to seat and retain the gasket, and the gaskets may be either prepositioned by the manufacturer, or shipped separately in suitable protective containers. Pipe spigots shall be beveled. Pipe bells shall be extruded integral with the pipe barrel with a thickness equal to or greater than that of the barrel.

(e) The gaskets shall be fabricated from a high-grade elastomer compound in accordance with ASTM Standard F477, "Specification for Elastomeric Seals (Gaskets) for Joining Plastic Pipe", except as otherwise modified herein. The basic polymer for the gaskets shall be synthetic rubber. Natural rubber gaskets or gaskets with both natural and synthetic rubbers will not be permitted. Gaskets shall be continuous, elastomeric, rubber ring type.

(f) Nominal laid length of Type PSM SDR-35 and SDR-26 PVC sewer pipe shall be 13 feet.

(g) Type PSM SDR-35 and SDR-26 PVC sewer pipe shall be double labeled (180 degrees apart) as follows at intervals of five (5) feet or less:

Date of manufacture - Manufacturer's name & Code
- Nominal size - Cell classification - "Type PSM
SDR-35 or SDR-26 PVC Sewer Pipe" - "Specification D3034"

2. <u>Type PSM SDR-35 and SDR-26 PVC Sewer Fittings</u>

(a) Type PSM SDR-35 and SDR-26 PVC Sewer Fittings shall conform to ASTM Standard D3034, “Standard Specification for Type PSM Poly (Vinyl Chloride) (PVC) Sewer Pipe and Fittings”, and to the specifications for Type PSM SDR-35 and SDR-26 PVC sewer pipe herein, except as modified below.
(b) The waterway and bell wall thickness shall be equal to or greater than that specified for pipe, except that for reducing fittings or those with smaller inlets, the wall thickness of each inlet shall be no less than the minimum wall thickness for that size pipe.

B. AWWA C900 AND C905 PVC (CI) PIPE AND FITTINGS

1. TYPE C900 and C905 PVC PIPE

(a) AWWA C900 Pipe for water and sewer mains and laterals shall conform to ANSI/AWWA C900, "(PVC) Pressure Pipe and Fabricated Fittings”, for 4-inch through 12-inch PVC pressure pipe and fabricated fittings with cast-iron-pipe-equivalent (CI) outside diameter (OD) dimensions and with wall-thickness-dimension ratios (DRs) 14, 18, and 25, except as otherwise modified herein.
(b) AWWA C905 pipe for water and sewer mains and laterals shall conform to ANSI/AWWA C905, “Polyvinyl Chloride (PVC) Pressure Pipe and Fabricated Fittings, 14-inch Through 48-inch for Water Transmission and Distribution”, for 14-inch through 48-inch PVC pressure pipe and fabricated fittings with cast-iron-pipe-equivalent (CI) and steel-pipe-equivalent (IPS) outside diameter (OD) dimensions and wall thickness dimension ratios (DRs) of 14, 18, 21, 25, 26, 32.5, 41, and 51, except as otherwise modified herein.

(1) AWWA C900 and C905 pipe shall be made from PVC thermoplastic having physical and chemical properties which meet or exceed a cell classification of 12454-A or 12454-B virgin compounds as defined in ASTM Standard D 1784.
(2) The AWWA C900 and C905 pipe shall be push-on type, with bells, spigots and elastomeric gaskets in accordance with ASTM Standard D 3139, "Standard Specification for Joints for Plastic Pressure Pipes Using Flexible Elastomeric Seals ". The gaskets shall conform to ASTM Standard F477 and shall be synthetic rubber. One gasket shall be furnished with each length of elastomeric-gasket bell-end pipe. Pipe spigots shall be beveled.

Pipe bells shall be extruded integral with the pipe barrel with a thickness equal to or greater than that of the barrel.

(3) Nominal laid length of AWWA C900 and C905 PVC (CI) pipe shall be 20 feet.

(4) The C900 and C905 pipe shall be labeled with the following at intervals of not more than five (5) feet:

Date of manufacture - Manufacturer's Name & Code
- Nominal size - "(CI)" - DR number – Pressure Class – Test Pressure for Hydro Tested or “NOT HYDROSTATIC PROOF TESTED” – AWWA designation number – Manufacturer’s name or trade mark and production run or lot code – Seal (Mark) of the testing agency verifying suitability of material for potable water service (must be NSF).

(5) Couplings and fabricated fittings shall be marked with:

Nominal Size – “(CI)” – Deflection angle, if applicable – “PVC” – AWWA Pressure Class – AWWA designation number of the applicable standard (C900 or C905) – Manufacturer’s name or trademark - Seal (Mark) of the testing agency verifying suitability of material for potable water service (must be NSF).

2. <u>TYPE C900 and C905 PVC FITTINGS</u>

(a) Fittings for AWWA C900 and C905, PVC (CI) shall conform to the requirements of ASTM Standard D1784 and the specifications for AWWA C900 and C905, PVC (CI) pipe herein, except as modified below.

(b) All fittings for C900 pipe shall be manufactured from PVC compound conforming to ASTM Standard D 1784-11. Fittings shall conform to the thickness requirements of DR18. All fittings, except wye branches, shall be Class 235 and shall be manufactured to withstand 755 psi quick burst pressure tested in accordance with ASTM Standard D 1599-99, "Standard Test Method for Resistance to Short-Time Hydraulic Pressure of Plastic Pipe, Tubing, and Fittings", and withstand 500 psi for a minimum of 1,000 hours tested in accordance with ASTM Standard D1598-02, "Test Method for Time-to-Failure of Plastic Pipe Under Constant Internal Pressure".

(c) All fittings for C905 pipe shall be manufactured from PVC compound conforming to ASTM Standard D1784-11. Fittings shall conform to the thickness requirements of DR18 for sizes 14 through 30-inch and DR25 for 36 through 48-inch. All fittings, except wye branches, shall be Class 235 for sizes 14 through 30-inch and Class 165 for 36 through 48-inch. Fittings 14 through 30-inch shall be manufactured to withstand 755 psi quick burst pressure tested in accordance with ASTM Standard D1599-99, "Test Method for Short-Time Hydraulic Failure of Plastic Pipe, Tubing, and Fittings" and withstand 500 psi for a minimum of 1,000 hours tested in accordance with ASTM Standard D1598-02, "Test Method for Time-to-Failure of Plastic Pipe Under Constant Internal Pressure". Fittings 36 through 48-inch shall be manufactured to with-stand 535 psi quick burst pressure tested in accordance with ASTM Standard D1599-99, "Test Method for Short-Time Hydraulic Failure of Plastic Pipe, Tubing, and Fittings" and withstand 350 psi for a minimum of 1,000 hours tested in accordance with ASTM Standard D 1598-02, "Test Method for Time-to-Failure of Plastic Pipe Under Constant Internal Pressure".

3. JOINT RESTRAINTS FOR C900 AND C905 PVC PRESSURE PIPE

For restraining C900 and C905 PVC pressure pipe and fittings, refer to Section 2.01.D.3, “Mechanical Joint and Push-on Joint “Megalug®”-type Restraining Systems”, elsewhere in this specification..

C. MANHOLE COUPLINGS FOR TYPE PSM SDR-35 PVC SEWER PIPE

1. Manhole couplings for Type PSM SDR-35 PVC sewer pipe shall conform to the requirements specified herein for type PSM SDR-35 PVC sewer fittings and shall be completely coated on the exterior with fine aggregate bonded to the PVC surface.

D. MANHOLE COUPLINGS FOR AWWA C900 and C905, PVC (CI) PIPE

1. Manhole couplings for AWWA C900 and C905 PVC (CI) pipe shall conform to the requirements specified hereinbefore for AWWA C900 and C905, PVC (CI) fittings, and shall be completely coated on the exterior with fine aggregate bonded into/to the PVC surface.

E. ADAPTER COUPLINGS

1. Adapter couplings shall have adjustable stainless steel shear rings. Insert shall be pro-vided with coupling. Clamps shall be all stainless steel.

F. SMALL DIAMETER PVC PIPE AND FITTINGS (SCHEDULES 40 AND 80)

1. Poly (Vinyl Chloride) (PVC) pipe and fittings specified herein are small diameter PVC with threaded, flanged and solvent cemented joints. All PVC pipe and fittings shall be made from high impact, rigid poly vinyl chloride compounds. Pipe and fittings shall be marked indicating size, type and schedule, ASTM Designation, manufacturer or trade mark, and shall bear the NSF (National Sanitation Foundation) seal of approval. Wherever the abbreviation PVC is used in these Specifications in relation to pipe and fittings, it shall mean poly (vinyl chloride) plastic pipe and fittings as specified herein.
2. PVC pipe shall be Schedule 80 as called for on the Plans or by the Engineer, Type I, Grade I, or Class 12454B with socket ends, and shall comply with ASTM Standard D1785, "Poly (Vinyl Chloride) (PVC) Plastic Pipe, Schedules 40, 80 and 120".
3. Schedule 80 socket-type fittings shall comply with ASTM Standard D2467, "Socket-Type Poly (Vinyl Chloride) (PVC) Plastic Pipe Fittings, Schedule 80" and D2464 "Specification for Threaded Poly Vinyl Chloride) (PVC) Plastic Pipe Fittings, Schedule 80, for threaded fittings.
4. Joining cement for PVC pipe and fittings shall comply with ASTM Standard D2564, "Solvent Cements for Poly (Vinyl Chloride) (PVC) Plastic Pipe and Fittings". Cemented joints shall be made in accordance with ASTM Standard D2855, "Recommended Practice for Making Solvent-Cemented Joints with Poly (Vinyl Chloride) (PVC) Pipe and Fittings".
5. Flanges: One piece molded hub type flat face flanges, 125 pound standard as specified under fittings hereinbefore.
6. Gaskets: Full faced, 1/8-inch thick, neoprene (for sewer) or SBR (for water).
7. AISI Type 316 stainless steel, ASTM A193, Grade B8M hex bolts and ASTM A194 Grade E8 hex head nuts. Bolts shall be fabricated in accordance with ANSI B 1812 and provided with washers of the same materials as the bolts.

G. CERTIFICATION

1. The Contractor shall provide the City with notarized Certifications, signed by an authorized agent of the manufacturer, that the material was manufactured, sampled, tested, and inspected in accordance with these

specifications, and has been found to meet the requirements. A report of said test results shall be furnished.

2. No pipe or fitting will be accepted for use in the project until the Certifications have been sub-mitted to and approved by the City.

H. HANDLING AND STORING PVC PIPE AND FITTINGS

1. Pipe and fittings shall at all times be handled with great care to avoid damage. In loading or unloading operations, the manufacturer's unitized package of pipe and/or fittings shall be lifted with a forklift or other suitable equipment in such a manner as to prevent damage. Pipe may be unloaded by individual lengths. However, each length shall be slid or rolled on skidways in such a manner that the pipe is not dropped, and to avoid any shock. Under no circumstances shall pipe and/or fittings be dropped or allowed to roll or slide against obstructions.
2. Pipe and/or fittings having ultraviolet degradation, warpage, impact damage, abrasion damage, or gouges or cuts will not be accepted. Bell ends showing compression set, damage or deformation will not be acceptable.
3. Gaskets, if not prepositioned in the bell ends, shall be stored and shipped in suitable protective containers. Gaskets shall not be exposed to excessive heat, direct sunlight, oil or grease.
4. Pipe and fittings shall be stored in a manner that will prevent warpage or other damage as previously specified.
5. If the pipe and/or fittings are to be stored for any period in excess of six months in direct sunlight the items shall be covered with an opaque material. The cover shall be placed in such a manner that will permit air circulation above and around the items being covered to prevent excessive heat accumulation.
6. Pipe and fittings shall be manually or mechanically lowered into the trench for installation, and shall not be thrown, dropped or pushed in the trench.

3.03 PIPE AND FITTINGS: COPPER

A. Pipe: Copper pipe shall be Type K for interior piping and Type K Soft Temper for exterior piping, both conforming to ASTM B88, seamless, round, drawn tubing.

B. Fittings: Solder joint fittings shall be wrought copper and bronze fittings conforming to ANSI B16.22 or cast brass fittings conforming to ANSI Standard B16.18. Fittings for use with copper tubing shall be one of the following:

1. Cast Bronze Solder-Joint Fittings: Solder joint fittings of this type shall be cast bronze fittings conforming to ANSI B16.18, "Cast Brass Solder-Joint Fittings", and ASTM Standard B62, "Composition Bronze or Ounce Metal Castings", as manufactured by Chase Brass and Copper Co., Stanley G. Flagg & Co., Inc., or approved equal.
2. Wrought Copper Solder-Joint Fittings: Solder joint fittings of this type shall be wrought copper fittings in accordance with ASNI B16.22, "Wrought Copper and Bronze Sold-er-Joint Pressure Fittings".

C. Solder: Solder shall consist of 95 percent tin and 5 percent antimony. Soldering shall be in conformance with Section 3 of the Copper and Brass Research Association Copper Tube Handbook.
D. Connection of copper pipe or fittings with galvanized pipe or fittings shall be made with dielectric fittings.

3.04 PIPE AND FITTINGS: GALVANIZED STEEL

A. Steel pipe, except as otherwise specified below, shall be Schedule 40, galvanized, seam-less steel pipe, conforming to ASTM Standard A53, "Pipe, Steel Black and Hot-Dipped, Zinc-Coated Welded and Seamless", Type S, Grade A or B. Black steel pipe may be used in fabricating items which are to be hot-dip galvanized after fabrication.
B. Screwed fittings, except as otherwise specified, shall be 150 psi galvanized malleable iron. Screwed unions shall be galvanized malleable iron with ground brass seats. Pipe threads shall be American Standard B2.1 NPT. Joint compound shall be used on all threaded joints, applied to the male threads only.
C. Furnish data certified by the manufacturer that the pipe and fittings are of the material specified. No piping will be accepted or used in construction until certificates have been submitted to and approved by the Engineer of Record.

3.05 PIPE AND FITTINGS: VITRIFIED CLAY

A. Vitrified clay pipe and fittings for gravity sewers shall be extra-strength, non-perforated. Pipe and fittings shall conform to the latest edition of ASTM Standard C700, "Vitrified Clay Pipe, Extra Strength, Standard Strength, and Perforated", and the following requirements.
B. A single fracture or crack passing through socket of the pipe bell and exceeding a length of one-half (½) inch in any direction shall be cause for rejection of the pipe. This requirement supersedes the portion of the ASTM Specifications cited above in conflict herewith.

C. The Contractor shall furnish certification from the manufacturer that the pipe and fittings used meet the requirements of ASTM Specifications C700.
D. The manufacturer shall furnish certification that the pipe and fittings supplied meet the requirements of ASTM Standard C700, latest edition. The Contractor shall be prepared to produce said certification when requested by the City.
E. Only factory bonded joints will be permitted for all vitrified clay pipe. The joints shall have rubber "O" ring type compression seals conforming to "Standard Specification for Compression Joints for Vitrified Clay Pipe and Fittings", ASTM C425, latest edition.
F. City approved pipe joints are Polyester Ring-Type joints as manufactured by Logan Clay Products Company under the trade name of "Logan-O-Ring", Can-Tex Indus-tries under the trade name of "Can-O-Lock," or approved equal.
G. Where cast iron soil pipe or ductile iron pipe laterals are used with vitrified clay mains, the wye or tee shall be vitrified clay. For the joint between the vitrified clay wye or tee and the lateral pipe use FERNCO "Donut" No. 6-10-601 with E.H.C.I. soil pipe and "Donut" No. 6-08-607 with ductile iron laterals, or approved equals. When using E.H.C.I. soil pipe with ductile iron tees or wyes, use transition gasket by Romac or approved equal.

3.06 HIGH DENSITY POLYETHYLENE (HDPE) PIPE

A. Smooth wall high density polyethylene pipe shall be a Type III, Class C, Category 5, Grade P34; PE 3408; as defined in ASTM D1248. Minimum classification, as given by ASTM D3350, shall be PE 335434C. Pipe shall meet the standards of ASTM F714, as modified herein, including the "Government/Military Procurement" sections. Minimum hydrostatic design basis shall be 1600 psi. In all cases, hydrostatic design basis and pressure rating shall be as determined using the methods of ASTM F714. Pipe of this type shall be butt-fusion welded at joints. All welding of joints shall be in strict conformity with the recommendations of the pipe manufacturer and by a firm or individual recommended to the Engineer of Record in writing by the manufacturer.
B. As a part of the shop drawing submittals under Section 01300, “Submittals”, the Contractor shall furnish the following signed by a Florida Registered Engineer, all calculations to determine, the pipe thickness, SDR rating, allowable stresses, in accordance with ASME B31.8 -1992, Table A842.22 and recommended coating, as required by the pipe manufacturer.

3.07 HIGH DENSITY POLYETHYLENE (HDPE) FOR USE IN POTABLE WATER SERVICES 2-INCH NOMINAL DIAMETER AND LESS

SECTION 15060

PIPING AND FITTINGS

A. HDPE PIPE FOR WATER SERVICES:

1. All 2-inch high density polyethylene pipe used for services shall be IPS-OD-controlled with Standard Outside Dimension Ratio (SODR) of 9, pressure rating of 200 psi, nominal outside diameter of 2.375-inches, minimum wall thickness of 0.264-inches, PE 3408, all in conformance with ASTM D3035-95 "Polyethylene (PE) Plastic Pipe (DR-PR) Based on Controlled Outside Diameter".
2. Pipe shall conform with ANSI/AWWA C901-96 "Polyethylene (PE) Pressure Pipe and Tubing, ½ In. (13 mm) Through 3 In. (76 mm), for Water Service" as modified herein.
3. Pipe shall have a (natural) inner core with a blue colored outer shell.
4. Pipe shall have footage marks at a maximum interval of every two feet.
5. Polyethylene material shall have a minimum cell classification in accordance with ASTM D3350-00 "Polyethylene Plastics Pipe and Fitting Materials" of 345444D for the core, which shall be 100% virgin material, and 345444E for the outer shell. Note that both of these materials are UV stabilized as signified by the "D" for natural colored and "E" for the colored shell.
6. Pipe shall conform with NSF 61 or 14.
7. Manufacturer shall supply certification of compliance with all of the above requirements. Certification shall ship with the pipe on material sold to the City and shall always be submitted with shop drawings and catalogue cuts. When required by the Director of the Department of Public Utilities or his designee, certification shall be signed and sealed by a professional engineer licensed to practice in the state in which the manufacturer is located or in the State of Florida.

B. HDPE TUBING FOR WATER SERVICES:

1. All 1-inch high density polyethylene tubing used for services shall be CTS-OD-controlled with Standard Outside Dimension Ratio (SODR) of 9, pressure rating of 200 psi, nominal outside diameter of 1.125-inches, minimum wall thickness of 0.125-inches, PE 3408, all in conformance with ASTM D2737-99 "Polyethylene (PE) Plastic Tubing".
2. Tubing shall conform with ANSI/AWWA C901 "Polyethylene (PE) Pressure Pipe and Tubing, ½ In. (13 mm) Through 3 In. (76 mm), for Water Service" as modified herein.
3. Tubing shall have a (natural) inner core with a blue colored outer shell.
4. Tubing shall have footage marks at a maximum interval of every two feet.

5. Polyethylene material shall have a minimum cell classification in accordance with ASTM D3350-00 "Polyethylene Plastics Pipe and Fitting Materials" of 345444D for the core, which shall be 100% virgin material, and 345444E for the outer shell. Note that both of these materials are UV stabilized as signified by the "D" for natural colored and "E" for the colored shell.
6. Tubing shall conform with NSF 61 or 14.
7. Manufacturer shall supply certification of compliance with all of the above requirements. Certification shall ship with the tubing on material sold to the City and shall always be submitted with shop drawings and catalogue cuts. When required by the Director of the Department of Public Utilities or his designee, certification shall be signed and sealed by a professional engineer licensed to practice in the state in which the manufacturer is located or in the State of Florida.

C. MECHANICAL FITTINGS UTILIZED WITH HDPE PIPE AND TUBING WATER SERVICES

1. Mechanical fittings utilized with HDPE pipe and tubing for water services shall conform with ANSI/AWWA C800, "Underground Service Line Valves and Fittings", as modified here-in.
2. Fittings shall utilize AWWA Standard (Mueller) threads on tapped pipe and tapping saddles
3. Fittings shall be designed and manufactured to withstand a sustained working pressure of 150 psi and to restrain the pipe against pull-out under loading beyond that causing tensile yield in the HDPE pipe or tubing connected.
4. The manufacturer shall supply certification of these capabilities and fittings shall not be accepted or installed without said certification. If fittings are being supplied to the City, the certification shall ship with the fittings and payment will not be made without this certification. At the discretion of the Engineer, this certification may be required to be signed and sealed by a professional engineer licensed to practice in the state where the supplying firm is located or in the State of Florida. His decision in this regard shall be final.
5. In all cases, fittings shall be installed in strict accordance with the manufacturer's instructions.

3.08 WALL SLEEVES, PIPES AND CASTINGS

- Wall Sleeves: Wall sleeves shall be of cast iron, ductile iron or carbon steel with steel galvanized after fabrication as specified in Section 15000, Piping General, under wall pipe. Sleeves shall be provided with seals and shall be oversized as required for the installation of seals. Sleeves shall terminate flush with finished surfaces of walls and ceilings, and shall extend 2-inches above the finished floor. Escutcheons shall be provided at walls and floor to completely conceal the sleeves smaller than 3-inches. Escutcheons shall be brass or cast iron, nickel plated split-type.
- Interior: Wall sleeves shall be installed for all piping passing through interior walls and floors, except where noted on the Drawings. Sleeves shall be of sufficient size to pass the pipe without binding.

A. Wall Sleeve Seals: Wall sleeve seals shall be modular mechanical type consisting of interlocking synthetic rubber links shaped to continuously fill the annular space between the pipe and wall sleeve. Links shall be loosely assembled with bolts to form a continuous rubber belt around the pipe with a pressure plate under each bolt head and nut. After the seal assembly is positioned in the sleeve, tightening of the bolts shall cause the rubber sealing elements to expand and provide an absolutely water-tight seal between the pipe and wall sleeve. The synthetic rubber shall be suitable for exposure to treated sewage effluent and groundwater. Bolts, nuts and hardware shall be 18-8 stainless steel. The seals shall be Link Seal as manufactured by Thunderline Corporation or equal, and the wall sleeve and seal shall be sized as recommended by the seal manufacturer.

B. All piping passing through exterior walls and base slabs shall be provided with wall pipes. All wall pipes shall be of ductile iron and shall have an intermediate flange or waterstop located in the center of the wall. Each wall pipe shall be of the same grade, thickness and interior coating as the piping to which it is joined. Those portions of the wall pipes that are buried shall have a coal tar outside coating.

3.09 STEEL CASING (JACKING AND BORING) (NOT USED)

3.10 STEEL PIPE (AERIAL CROSSING) (NOT USED)

Part 4 - EXECUTION

4.01 GENERAL:

A. The Contractor shall provide all barricades and/or flashing warning lights necessary to warn of the construction throughout the Project.
B. Pipe and fittings shall at all times be handled with great care to avoid damage. In loading and unloading, they shall be lifted with cranes or hoists or slid or rolled on skidways in such manner as to avoid shock. Under no circumstances shall this material be dropped or allowed to roll or slide against obstructions.
C. All work shall be performed by skilled workmen experienced in similar installations. All pipe and fittings shall be adequately supported by clamps, brackets, straps, concrete supports, rollers or other devices as shown and/or specified. Supports or hangers shall be spaced so that maximum deflection between supports or hangers shall not exceed 0.050 inch for pipe filled with liquid, but shall not be further than 6 feet apart, whichever is closer, unless otherwise shown. All pipe supports shall be secured to structures by ap-proved inserts or expansion shields and bolts.
D. All pipe shall be thoroughly cleaned internally before being installed. All pipes, except oxygen service, air and gas, shall be flushed with water and swabbed to assure removal of all foreign matter before installation. Air and gas piping shall be tapped with a hammer to loosen scale or other foreign matter that might be within the pipe, then thoroughly blown with a high pressure air hose. Air shall be from the Contractor's air compressor.
E. Whenever possible, the pipe will be installed with minimum 48-inches of cover, however, due to the numerous utilities in the area, this burial could change substantially.
F. At all horizontal or vertical pipe deviation, the Contractor shall install both restrained pipe and thrust blocks. Joints may only be opened to adjust alignment by half of the AWWA or manufacturer's recommended opening (which is smaller).
G. Pipe Sleeves and Wall Castings: Pipe sleeves and wall castings shall be provided at the locations called for on the Drawings and/or specified herein. These units shall be as de-tailed and of the material as noted on the Drawings and/or specified herein. They shall be accurately set in the concrete or masonry to the elevations shown. All wall sleeves and castings required in the walls shall be in place when the walls are poured. Ends of all wall castings and wall sleeves shall be of a type consistent with the piping to be connected to them.
H. Tie Rods: Unless otherwise indicated on the Drawings, the size and number of tie rods for a joint or installation shall be as recommended by the

manufacturer's design chart for a working pressure of 150 psi. Tie rods shall be installed as recommended by the manufacturer.

4.02 EXCAVATION FOR PIPING

A. The Contractor shall make all excavation necessary for the construction of the pipelines, connections, valves and appurtenances, to the lines and grades shown on the Plans.
B. The trench shall be excavated at least 6 inches below pipe laying grade as shown on the Plans. All sheeting and shoring shall be installed at the Contractor's expense where it is necessary for pipe installation and property protection or required by the Trench Safety Act. The cost of dewatering any excavation shall be at the Contractor's expense. The disposal of water removed from an excavation shall be in a manner which will not create a hazard, or be detrimental to the public health or to public or private property.
C. The Contractor shall obtain all necessary permits approving the location and proposed method of disposal before discharging water from any excavation into any portion of the public right-of-way or into any existing drainage structure or facility. All construction signs required shall be provided by the Contractor.

4.03 INSTALLATION OF PIPE, FITTINGS AND VALVES

A. GENERAL:

1. The design Drawings are in some cases diagrammatic. They may not show every bend, off-set, elbow or other fitting which may be required in the piping for installation in the space allotted. Careful coordination of the work of this Section with that of Division 2 and 16 is necessary to avoid conflicts. Install gravity lines at uniform grade to low point after field verification of low point invert.
2. The centerline of the pipe shall not vary by more than 2 inches from the location shown on the Plans and the top of the pipe shall not vary by more than 2 inches from the established grade, except at points where this tolerance must be changed to clear obstructions, or make connections. Deviation from this location will be permitted only upon written instructions from the Engineer.
3. Sandbags may be used to support the pipe in the ditch but no pipe shall be laid on blocks, except by the written permission of the Engineer of Record. The trench shall be dewatered to the extent that all poured lead joints in cast iron pipe and fittings may be made perfectly dry. Flanged

joints, mechanical joints and push-on joints in cast iron pipe and fittings may be made under water.

B. INSTALLATION OF DUCTILE IRON PIPE

1. All bends, tees, and plugs, unless otherwise specified, shall be backed with concrete to undisturbed ground. Provision shall be made to prevent concrete from adhering to plugs or bolts.
2. Bolts, nuts and rubber gaskets for use in flanged and mechanical joints shall be stored under cover. Gaskets shall not be exposed to heat, light or any petroleum products, shall be kept clean and shall not be handled with greasy or dirty hands.
3. Before making up flanged joints in cast iron pipe and fittings, the back of each flange under the bolt heads, and the face of each flange shall have all lumps, blisters and excess bituminous coating removed and shall be wire brushed and wiped clean and dry.
4. Before laying the ductile iron pipe, all lumps, blisters and excess coal-tar coating shall be removed from the bell and spigot ends of each pipe and the outside of the spigot and the inside of the bell wire brushed and wiped clean and dry. The entire gasket groove area shall be free of bumps or any foreign matter which might displace the gasket. The cleaned spigot and gasket shall not be allowed to touch the trench walls or trench bottom at any time. Vegetable soap lubricant shall be applied in accordance with the pipe manufacturer's recommendations, to aid in making the joint. The workmen shall exercise caution to prevent damage to the gasket or the adherence of grease or particles of sand or dirt. Deflections shall be made only after the joint has been assembled.
5. Cutting of ductile iron pipe for inserting valves, fittings, etc., shall be done by the Con-tractor with a mechanical pipe saw in a neat and workmanlike manner without dam-age to the pipe, the lining, or the coating.
6. Unless otherwise directed, ductile iron pipe shall be laid with the bell ends facing in the direction of laying; and for lines on an appreciable slope, the bells shall, at the discretion of the Engineer, face upgrade.
7. Push-on and mechanical joints in ductile iron pipe and fittings shall be made in accordance with the manufacturer's standards except as otherwise specified herein. Joints between push-on and mechanical joint pipe and/or fittings shall be made in accordance with AWWA Standard Specification C600, "Installation of Ductile Iron Water Mains and their Appurtenances, except that deflection at joints shall not exceed one-half of the manufacturer's recommended allowable deflection, or one-half of the

allowable deflection specified in AWWA C600, whichever is the lesser amount.

8. Flanged joints shall be used only where indicated on the Plans. Before making up flanged joints in the pipeline, the back of each flange under the bolt heads and the face of each flange shall have all lumps, blisters and excess bituminous coating re-moved and shall be wire brushed and wiped clean and dry. Flange faces shall be kept clean and dry when making up the joint, and the workmen shall exercise caution to prevent damage to the gasket or the adherence of grease or particles of sand or dirt. Bolts and nuts shall be tightened by opposites in order to keep flange faces square with each other, and to insure that bolt stresses are evenly distributed.
9. Bolts and nuts in flanged and mechanical joints shall be tightened in accordance with the recommendations of the pipe manufacturer for a leak-free joint. The workmen shall exercise caution to prevent overstress. Torque wrenches shall be used until, in the opinion of the Engineer, the workmen have become accustomed to the proper amount of pressure to apply on standard wrenches.

C. INSTALLATION OF PVC PIPE:

1. In the installation of glue joint PVC pipe, the pipe shall first be cut square and smooth. Wipe all surfaces to be connected with a cloth moistened with an appropriate solvent and remove any foreign matter from socket of fitting. Using an ordinary paint brush of width about equal to the nominal pipe size, apply a generous coat of cement to inside and shoulder of socket, flowing on but not brushing out. A similar coat shall then be applied to the end of the pipe for at least the same distance on the pipe as the depth of socket, and to the cut end. Pipe and fittings shall then be pressed firmly together and the pipe turned a quarter to a half turn to evenly distribute the cement. The cementing and joining operation must not exceed one minute. Allow 24 hours setup time before applying pressure. Sand shall be used as backfill material around pipe installed underground.
2. Thread Sealant: Teflon tape.
3. All rigid PVC pipe shall be cut, made up, and installed in accordance with the pipe manufacturer's recommendations. Plastic pipe shall be laid by snaking the pipe from one side of the trench to the other. Offset shall be as recommended by the manufacturer for the maximum temperature variation between time of solvent welding and during operation.
4. Schedule 80 pipe shall not be threaded. Use Schedule 80 threaded nipple where necessary to connect to threaded valve or fitting.

5. Only strap wrenches shall be used for tightening threaded plastic joints, and care shall be taken not to over tighten these fittings.
6. Provide adequate ventilation when working with pipe joint solvent cement.
7. Testing: All lines shall be hydrostatically tested at the pressures specified elsewhere herein or at the design pressures.
8. Supports and Hangers: In accordance with the manufacturer's recommendations.

D. INSTALLATION OF COPPER PIPE:

1. Tubing above ground shall, whenever possible, be run in full lengths between fittings, valves and connections, and joints shall be kept to a minimum.
2. All connections shall be made without sharp bends or kinks in the tubing.
3. Above ground tubing shall be supported at short intervals to prevent sagging and vibration.
4. All copper pipe shall be reamed to full diameter before joining. The ends of pipe and the inside of fittings shall be cleaned and flux applied to the entire area of pipe to be soldered.

E. JOINT PIPE:

1. Threaded Pipe: Ream all pipe after cutting and before threading. Use non-hardening pipe compound "Tite-Seal" (or approved equal) on male threads only.
2. Provide nipples of same material and weight as pipe used. Provide extra strong nipples when length of unthreaded part of nipple is less than 1-1/2".
3. Provide reducing fittings rather than bushings where changes in pipe sizes occur.
4. Provide dielectric unions or flanges between copper and steel piping and between brassware and steel. Do not use steel and copper piping in the same system without such isolation.

F. UNIONS:

Provide unions or flanges in all domestic water service lines at each piece of equipment, specialty valves or at other locations required for ready disconnect.

G. PIPE PROTECTION:

1. Paint all uninsulated metal (ductile iron or steel) piping underground with two coats of asphaltic paint.

2. Wrap soil pipe that touches metal or is exposed to masonry with a layer of 6 mil polyethylene.
3. Spirally-wrap all pipe lines embedded in concrete with two layers of 30 lb. felt.
4. Coat all exposed threads on galvanized steel pipe after assembly with two coats of zinc chromate.

H. CLEANING AND TESTING:

All of the piping installed under this project shall be tested as follows and as directed by the Engineer:

1. With exceptions as noted below, all ductile iron piping installed under this Contract shall be cleaned and tested according to Section 15995, “Pipeline Testing and Disinfection”, and as modified below:

   (a) Only potable water piping shall be disinfected.
   (b) No leakage shall be permitted for any flanged-joint, or above ground piping.

2. Unless otherwise specified elsewhere herein, all PVC pressure system bushings and galvanized steel piping shall be tested at 150 psig. No leakage will be permitted.

I. INSTALLATION OF ABOVEGROUND AND EXPOSED PIPING:

1. Aboveground and exposed pipe fittings, valves and accessories shall be installed as shown or indicated on the Drawings.
2. Piping shall be cut accurately to measurements established at the job site and shall be worked into place without springing or forcing, properly clearing all equipment access areas and openings. Changes in sizes shall be made with appropriate reducing fittings rather than bushings. Pipe connections shall be made in accordance with the details shown and manufacturer's recommendations. Open ends of pipe lines shall be properly capped or plugged during installation to keep dirt and other foreign material out of the system. Pipe supports and hangers shall be provided where indicated and as required to insure adequate support of the piping.
3. Welded connections shall be made in conformity with the requirements of AWWA Standard C 206 and shall be done only by qualified welders. The Engineer may, at his option, require certificates that welders employed on the work are qualified in conformity with the requirements of this standard

and/or sample welds to verify the qualifications of the welders. Before testing, field-welded joints shall be coated with the same material used to coat the pipe in accordance with the requirements of AWWA.

4. Flanged joints shall be made up by installing the gasket between the flanges. The threads of the bolts and the faces of the gaskets shall be coated with a suitable lubricant immediately before installation.
5. Joints using Dresser couplings shall be made up as recommended by the manufacturer.
6. Use of perforated band iron (plumber's strap), wire or chain as pipe hangers will not be acceptable. Supports for pipe less than 1-1/2 inches nominal size shall not be more than 8-feet on centers and pipe 2-inches nominal size and larger shall be sup-ported at not more than 10 feet on centers, unless otherwise indicated. Supports for PVC pipe shall be spaced one-half the distance specified above unless otherwise indicated. Any noticeable sagging shall be corrected by the addition of extra supports at the Contractor's expense.

J. INSTALLATION OF HDPE SERVICES

All HDPE services require the use of a 10-gauge stranded copper blue tracer wire.

4.04 FIELD QUALITY CONTROL

A. All water mains shall be flushed to remove all sand, debris, rock and other foreign matter. Dispose of the flushing water without causing a nuisance or property damage.
B. Pressure and leakage testing shall follow the requirements of Section 15995, “Pipeline Testing and Disinfection”.

1. Where infiltration or exfiltration exceeds the allowable limits specified herein, the defective pipe, joints, or other faulty construction shall be located and repaired by the Contractor at no additional cost or time impact to the Contract.
2. The Contractor shall provide all labor, equipment and materials, and shall conduct all testing required under the direction of the Engineer of Record. No separate payment will be made for this work and the cost for this work shall be included in the prices quoted in the Proposal.
3. The Contractor shall locate and repair all leaks until the leakage is reduced to the limits specified. Any observed leaks or obviously defective

joints or pipes shall be repaired or replaced as directed by the Engineer of Record, even though the total leakage is below that specified above.

- END OF SECTION -

SECTION 15100

VALVES, GENERAL

Part 1 - GENERAL

1.01 WORK INCLUDED

A. The CONTRACTOR shall provide all tools, supplies, materials, equipment, and labor necessary for furnishing, cement coating, epoxy coating, installing, adjusting, and testing of all valves and appurtenant work, complete and operable, in accordance with the requirements of the Contract Documents. Where buried valves are shown, the CONTRACTOR shall furnish and install valve boxes to grade, with covers, extensions, and position indicators.

B. The provisions of this Section shall apply to all valves and valve operators specified in the various Sections and Division 2 of these Specifications except where otherwise specified in the Contract Documents. Valves and operators in particular locations may require a combination of units, sensors, limit switches, and controls specified in other Sections of these Specifications.

1.02 RELATED WORK

A. Section 02000 - Water Distribution System
B. Section 02222 - Excavation and Backfill for Utilities
C. Section 15000 - Piping General

1.03 REFERENCE STANDARDS

A. Codes: All codes, as referenced herein, are specified in Section 01090
B. Commercial Standards:

ANSI B16.5	Pipe Flanges and Flanged Fittings, Steel Nickel Alloy and Other Special Alloys
ANSI/ASME B31.1	Power Piping
ASTM A 36	Specification for Structural Steel
ASTM A 48	Specification for Gray Iron Castings
ASTM A 126	Specification for Gray Iron Castings for Valves, Flanges, and Pipe Fittings
ASTM A 536	Specification for Ductile Iron Castings
ASTM B 61	Specification for Steam or Valve Bronze Castings
ASTM B 62	Specification for Composition Bronze or Ounce Metal Castings
ASTM B 148	Specification for Aluminum-Bronze Castings

ASTM B 584	Specification for Copper Alloy Sand Castings for General Applications
ANSI/AWWA C500	Gate Valves for Water and Sewerage Systems
ANSI/AWWA C502	Dry-Barrel Fire Hydrants
ANSI/AWWA C503	Wet-Barrel Fire Hydrants
ANSI/AWWA C504	Rubber-Seated Butterfly Valves
ANSI/AWWA C507	Ball Valves 6 Inches Through 48 Inches
AWWA C508	Swing-Check Valves for Waterwork Service, 2 Inches Through 24 Inches NPS
ANSI/AWWA C509	Resilient-Seated Gate Valves for Water and Sewage Systems
ANSI/AWWA C511	Reduced-Pressure Principle Backflow-Prevention Assembly
AWWA C550	Protective Interior Coatings for Valves and Hydrants
SSPC-SP-2	Hand Tool Cleaning
SSPC-SP-5	White Metal Blast Cleaning

1.04 SUBMITTALS

A. Shop Drawings: Shop drawings of all valves and operators including associated wiring diagrams and electrical data, shall be furnished as specified in Section 01300, "Submittals".
B. Valve Labeling: The CONTRACTOR shall submit a schedule of valves to be labeled indicating in each case the valve location and the proposed wording for the label.

1.05 QUALITY ASSURANCE

A. In accordance with the “Reduction of Lead in Drinking Water Act” (Act) enacted by the USEPA on January 4, 2011, effective January 4, 2014 all piping, fittings, fixtures, valves, and other appurtenances used in potable water supply and distribution systems shall be “lead free” as defined in Section 1417(d) of the Safe Drinking Water Act (SDWA). All requirements of the Act as it relates to the products under this section shall be strictly adhered to.
B. All valves and related appurtenances shall be manufactured in the United States.
C. Bolts on valve flanges shall be A-316 stainless steel.

D. Valve Testing: Unless otherwise specified, each valve body shall be tested under a test pressure equal to twice its design water-working pressure.
E. Bronze Parts: Unless otherwise specified, all interior bronze parts of valves shall conform to the requirements of ASTM B 62, or where not subject to dezincification, to ASTM B 584.
F. Certification: Prior to shipment, the CONTRACTOR shall submit for all valves over 12 inches in size, certified, notarized copies of the hydrostatic factory tests, showing compliance with the applicable standards of AWWA, ANSI, ASTM, etc.

Part 2 - PRODUCTS

2.01 GENERAL

A. The Contractor shall furnish all valves, gates, valve operating units, stem extensions, operators and other accessories as shown or specified. All valves and gates shall be new and of current manufacture. All non-buried valves, 6-inch and larger, shall have operators with position indicators. Where buried, these valves shall be provided with valve boxes, covers and valve extensions. Valves mounted higher than 6-feet above working level shall be provided with chain operators. All valve boxes shall have a minimum design pressure rating of 150 psi unless otherwise specified elsewhere herein. If two (2”) or smaller valves are needed, Nibco T-113-LF shall be used.
B. Ductile iron parts of valves shall meet the requirements of ASTM A126, "Standard Specifications for Gray Iron Castings for Valves, Flanges and Pipe Fittings, Class 'B'." Flanged ends shall be flat-faced and have bolt circle and bolt patterns conforming to ANSI B16.1 Class 125.
C. All castings shall be clean and sound, without defects of any kind and no plugging, welding or repairing of defects will be permitted. All bolt heads and nuts shall be hexagonal conforming to ANSI B18.2. Gaskets shall be full-face and made of synthetic elastomers in conformance with ANSI B16.21 suitable for the service characteristics, especially chemical compatibility and temperature. Non-ferrous alloys of various types shall be used for parts of valves as specified. Where no definite specification is given, the material shall be the recognized acceptable standard for that particular application.
D. All buried valves shall be provided with cast-iron valve boxes unless otherwise indicated. The boxes shall conform to City Standards and be installed perpendicularly, centered around and covering the upper portions of the valve operator. The top of each valve box shall be placed flush with finish

grade unless otherwise indicated on the Drawings. Valve boxes shall be as specified elsewhere in this Section.

E. All buried valves and other valves located below a concrete operating deck or level, specified or noted to be key operated, shall have an operator to finish grade or deck level, non-rising stem, a 2-inch square AWWA nut with skirt, and cover or box and cover, as may be required.

F. Extension Shafts:

1. A one-piece extension shaft with an AWWA 2-inch square operator nut pinned at the top end and coupling shear pin shall be furnished with valves, where applicable, as shown in the Plans or Standard Details. Extension shafts shall be designed and furnished by the valve manufacturer and shall each be complete with coupling, standard AWWA 2-inch square operating nut with skirt, shear pins and centering-identification plate, for connection to the valve operator (or input) shaft as specified herein below. Shafts shall be of solid section. Hollow shafting is not acceptable.
2. All operator components between the operating nut and the adjustable stops shall be designed to withstand, without damage, an input torque of 300 ft. lbs. The shaft shall be furnished with an AWWA 2-inch square operating nut with skirt, mounted and pinned to the top of the shaft. A coupling shall be provided for the bottom of the shaft to connect the extension to the valve operator (or input) shaft.
3. The coupling shall be welded to the bottom end of the extension shaft after the exact required length of the shaft has been determined by field measurement during the valve installation and cut to size. The weld shall be wire brushed and painted with Kop-Coat Super Hi-Gard 891 or approved equal. The sized extension shaft with welded coupling shall be installed to the valve operator shaft and pinned with the coupling shear pin. The welding of the coupling to the extension shaft shall be performed by operators who are certified. The welding shall conform to all of the applicable recommendations of the American Welding Society and the American Institute of Steel Construction.
4. The pin through the coupling and valve operator (or input) shaft shall be of a larger diameter than the pin through the top nut and extension shaft, so that if torque exceeds the designed limits, the pin through the nut will shear first. Pins shall be either force fit or mechanically locked. Mechanical locking shall be by lock washers, lock nuts, force fit or other sturdy and corrosion resistant means. No roll pins will be allowed. Riveted or welded type pins will not be allowed.

5. The extension shaft shall also be equipped with a combination centering-identification plate. The combination centering-identification plate, with a drilled or punched center hole, will be slipped onto the shaft prior to welding the shaft's bottom coupling as specified above. The center hole in the plate shall be 1/4 inch larger in diameter than the shaft, maximum. The plate shall be 1/8-inch thick AISI Type 316 stainless steel with an outside diameter of 6-3/4 inches. The top of the plate shall be buffed to remove mill scale, and the following information shall be stamped into the top of the plate in letters and numerals not less than 3/8 inch in height; valve manufacturer; valve type, size and class; direction to open; and number of turns to fully open from a fully closed position. The valves shall open by turning the operating nuts counterclockwise.

G. Valve Flanges: The flanges of valves shall be in accordance with Section 15000 - Piping General.

H. Gate Valve Stems: Gate valve stems shall be of bronze conforming to ASTM B62, containing not more than 5 percent of zinc or more than 2 percent of aluminum. Gate valve stems shall have a minimum tensile strength of 60,000 psi, a minimum yield strength of 40,000 psi, and an elongation of at least 10 percent in 2 inches, as determined by a test coupon poured from the same ladle from which the valve stems to be furnished are poured. Where dezincification is not a problem, bronze conforming to ASTM B 584 may be used.

I. Protective Coating: Except where otherwise specified, ferrous surfaces, exclusive of stainless steel surfaces, in the fluid passages of all valves 4-inch and larger shall receive an epoxy coating in accordance with AWWA C550. Flange faces of valves shall not be epoxy coated. The valve manufacturer shall certify in writing that such coating has been applied and tested in the manufacturing plant prior to shipment, in accordance with these Specifications. Exterior coating shall be asphalt varnish conforming to Federal Specification TT-C-494A.

J. Nuts and Bolts: All nuts and bolts on valve flanges and supports shall be in accordance with manufacturer’s recommendations. Where submerged or buried, all nuts, bolts and washers on valve flanges and valve bodies shall be A-316 stainless steel. Nuts, bolts and washers shall be of different grades of stainless steel to prevent galling.

K. Valve Labeling: A label shall be provided on all shut-off valves exclusive of hose bibs and chlorine cylinder valves. The label shall be of 1/16-inch brass or stainless steel, minimum 2 inches by 4 inches in size, and shall be permanently attached to the valve or on the wall adjacent to the valve or as indicated by the City.

L. Valve Operators

1. General

(a) All butterfly valves, plug valves over 8-inch size and gate valves installed horizontally shall be furnished with geared operators, provided by the manufacturer. All valves of a particular size and pressure rating by a given manufacturer shall be supplied with the same operator. No variation will be permitted during the contract. All valve operators, regardless of type, shall be installed, adjusted, and tested by the valve manufacturer at the manufacturing plant. Operator orientation shall be verified with the City prior to fabrication. If this requirement is not met, changes to orientation shall be made at no cost the City.

(b) All operators shall turn counter-clockwise to open. Operators shall have the open direction clearly and permanently marked. Field adjustment and testing of the operators and valves to ensure proper installation and operation shall be the responsibility of the Contractor.

2. Manual Operators

(a) All manual operators shall be equipped with AWWA square nuts, handwheels or chain drives as appropriate. Some small (6-inch or less) valves may be lever operated if so specified elsewhere herein. Where buried, the valves shall have extensions with square nuts or floor stands as indicated on the Drawings. Valves mounted higher than 6 feet above floor or operating level shall have chain operators with chain terminating 4 feet above operating level.

(b) Operation of valves and gates shall be designed so that the effort required to operate the handwheel, lever or chain shall not exceed 40 pounds applied at the extremity of the wheel or lever. The handwheels on valves 14 inches and smaller shall not be less than 8 inches in diameter, and on valves larger than 14 inches the handwheel shall not be less than 12 inches in diameter.

(c) Chainwheel operator shall be fabricated of malleable iron with pocketed type chainwheels with chain guards and guides. Chainwheel operators shall be marked with an arrow and the word "open" indicating direction to open. The operators shall have galvanized smooth welded link type chain. Chain that is crimped or has links with exposed ends is not acceptable.

3. Electric Motor Operators

   (a) All motorized valves shall be furnished by the CONTRACTOR through the valve manufacturers as a complete package. Motor driven valve operators shall be furnished and installed in accordance with the applicable requirements shown on the process and instrumentation diagrams and electrical elementary diagrams. Operators shall comply with AWWA requirements for electrical operators.

   (b) Electric operators including the motor, all required gearing, integral continuous duty rated reversing starter, AC line surge suppressors, controls and switches shall be as manufactured by Rotork, Limitorque, EIM; or equal. The motorized operators for modulating service shall be furnished with an integral position indicator/transmitter/controller. The above unit shall be internally powered, factory calibrated and furnished with adjustable zero, span, gain and deadband controls.

   (c) The position indicator/transmitter shall provide a linear, isolated, 4-20 mA, 24 VDC output to remote instrumentation and controls proportional to 0-100 percent travel span. An external DC power source shall not be required.

   (d) The position controller shall accept a linear 4-20 mA, 24 VDC input signal proportional to 0-100 percent travel span and shall generate appropriate outputs to the reversing starter to open/close the valve until the desired portion has been reached as determined by the position feedback signal to the position controller. Input signal isolation shall be provided.

   (e) The controller shall be furnished with circuitry to "lock in the last position" upon loss of control signal. CONTRACTOR shall be responsible for proper transmitter/controller calibration in accordance with the manufacturer's recommendations.

   (f) Operator capacity shall be adequate to continuously operate the valve under all operating conditions. Unless otherwise indicated, or specified, motor operators shall be furnished complete with motors, limit switch operating mechanisms, travel limit switches, torque switches, transmitters, controllers, starters, lighting and surge suppression, terminal blocks, gear reducers, handwheel, gearing, necessary components, and incidental accessories as follows:

      - All phases of the power supply shall be monitored. The contractor shall open de-energizing the motor upon detection of single phasing.

- Logic circuits shall be protected against spurious voltage spikes, using opto-isolators in circuits connected to any remote input or output signals.

(g) Enclosure: The starter for 240 volt single phase motor operators and all local devices shall be mounted on a common NEMA 4 and PVC coated cast aluminum enclosure. The enclosure shall be permanently affixed to the valve operator housing.

(h) Valve Stops: Valve stops for the operators shall be positive in action. Closing shall be complete, and opening full. Stops shall be field adjustable to the required settings. The torque switches shall prevent any excessive mechanical stress or electrical overloading any direction of travel.

(i) Limit switches and gearing shall be an integral part of the motorized valve operator. The limit switch gearing shall be of the intermittent type, totally enclosed in its own gear case, grease lubricated to prevent direct and foreign matter from entering the gear train and shall be made of bronze or stainless steel. Limit switches shall be of the adjustable type capable of being adjusted to trip at any point between the normal position (full open, or full closed) and 75 percent of the travel to the opposite position.

(j) Local (Motor) Devices: Local devices shall include, but not be limited to the following:

- Torque Switches: Torque switches, responsive to high torque encountered in either direction of travel. A torque switch which has tripped due to mechanical load shall not reset when the operator motor has come to a halt.
- Limit Switches: Travel limit switches, for opening and closing direction of travel. Contract operations shall be as indicated on the Drawings. If not shown on the Drawings, the operator shall be furnished with a minimum of two DPDT switches. All switches shall be furnished with 5 ampere contacts. Switches shall be connected such that when the valve is fully open, or fully closed, the "open" or "close" light shall be illuminated. All limit switch contacts shall be wired out to a terminal strip so that the electrician in the field does not have to connect to the switches.
- Local/remote selector switch with phase motor relay and auxiliary to provide dry contacts for collective indication of placement in the "remote" operating mode, the unit is powered, and that all safety/overload interlocks are satisfied to provide

the above signal. For further requirements refer to electrical elementary control schematic.

- Open/close push-button for local manual operation (modulating service).
- Position indicator calibrated to 0-100 percent travel span.
- Terminals for remote indication of full open, full closed and overload (torque).

(k) Operating Unit Gearing: The actuator shall be double reaction unit with the capability of quickly changing the output speed with a gear change. The power gearing shall consist of generated spur or helical gears of heat-treated steel, and worm gearing where required by the type of operator. Quarter turn or traveling unit operators do not specifically require worm gearing. The worm shall be of hardened alloy steel and the worm gear shall be of alloy bronze. All power gearing shall be grease-lubricated. Ball or roller bearings shall be used throughout for all motor operators. A mechanical dial position indicator to display valve position in percent of valve opening shall be provided. The gearing shall comply with AWWA requirements.

(l) Stem Nuts: The actuator for other than quarter turn valves shall have a stem nut of high tensile bronze or other material compatible with the valve stem and suited to the application. The nut arrangement, where possible, shall be of the two-piece type to simplify field replacement. The stem nut for rising stem valves must be capable of being removed from the top of the actuator without removing the actuator from the valve, disconnecting the electrical wiring, or disassembling any of the gearing within the actuator.

(m) A handwheel shall be provided for manual operation. The handwheel shall not relocate during hand operation nor shall a fused motor prevent manual operation.

(n) When in manual operating position, the volt motor driven unit will remain in this position until motor is energized at which time the valve operator will automatically return to electric operation and shall remain in motor position until handwheel operation is desired. This movement from motor operation to handwheel operation shall be accomplished by a positive declutching knob or lever which will disengage the motor and motor gearing mechanically not electrically. Hand operation must be reasonable fast and require no more than 100 lbs. of rim effort at the maximum required torque. It

shall not be possible for the unit to be simultaneously in manual and motor operation.

(o) 240 Volt Single Phase Motors: All motors on valves shall be designed for 240 volts 1-phase 60 Hz power. The motor shall be specifically designed for valve actuator service and shall be of high torque, squirrel cage reversible, totally enclosed, non-ventilated construction, with motor leads brought into the limit switch compartment without having external piping or conduit box. Motor insulation shall be NEMA Class B with maximum continuous temperature rating of 120◦ C (rise + ambient). Motors shall be sized to have a rated running time at the rated running torque of 15 minutes without exceeding the temperature rating of the insulation system. Running load torque shall be not more than 20 percent of the rated seating/unseating torque.

(p) Speed-torque curves for the motors and torque calculations for seating, unseating, and running conditions shall be submitted. The maximum valve torque (seating/unseating) shall be less than 50 percent of stall torque or starting torque potential of the motor whichever is greater.

(q) Operator Type:

Type A: Remote set-point using a 4-20 mable analog signal

Local Operation

- LOCAL/REMOTE selector
- OPEN/CLOSE push-buttons
- Position set-point potentiometer/indicator
- LOCAL accepts local position set-point
- OPEN/CLOSE indication
- Fault (torque) indication

Remote operation

- REMOTE - accept a remote 4-20 mA position set-point
- Position transmitter 4-20mA signal to RTU (Remote Transmitter Unit)
- Available Ready of Auto to RTU
- Fault torque status to RTU

(r) Valve Closure Time shall be 1 minute

(s) Spare Parts:

The CONTRACTOR shall furnish loose, one unit valve operator, complete with all the devices specified herein and with all the features and characteristics similar to the equipment supplied in this Contract. The spare operator shall be delivered to the CITY still in crates.

M. TORQUE LIMITING DEVICE

1. Each valve shall be provided with a torque limiting device designed to protect the actuator and valve parts. The device shall consist of an overtorque protection mechanism enclosed in a hermetically sealed cast iron housing. The mechanism shall be permanently lubricated and factory set to trip between 200 and 220 ft. lbs. of applied torque. The housing shall have integrally cast, 2-inch AWWA operating nut and matching socket to operate and to fit over the actuator or extension shaft nuts, respectively. The socket shall be provided with a set screw to fit the device. The direction of rotation shall be permanently shown with word and arrow next to the operating nut. The entire device shall be coated inside and out with a 2-part epoxy. The torque limiting device shall be as manufactured by Annspach Controls Company of St. Louis, Missouri, or approved equal.

N. FLOOR STANDS

1. Floor stands shall be cast iron, non-rising stem type with lockable hand wheel operator, valve position indicator and stainless steel or bronze extension stem. Hand wheel shall be lockable in the full open and full closed positions. The floor stand shall be furnished with an armored padlock and six keys. Lock shall be as manufactured by Master, Schlage or equal. Floor stand shall be standard pattern type as manufactured by Clow Corporation, or equal.

O. END CONNECTIONS:

1. The dimensions of end connections shall conform to AWWA Standard C111-85. The end flanges of flanged valves shall conform in dimensions and drilling to ANSI Standard B16.1 for cast iron flanges and flanged fittings, Class 125, unless specifically provided otherwise. The bolt holes shall straddle the vertical center-line.

2.02 PLUG VALVES

A. Plug valves shall be of the non-lubricated, eccentric type with resilient faced plugs. Port areas shall be at least 80 percent of full pipe area. Bodies shall be semi steel with raised seats. Seats shall have a welded in overlay of high nickel content on all surfaces contacting the plug face. Valves shall have permanently lubricated, stainless steel bearings in the upper and lower plug stem journals. All valves shall be of the bolted bonnet design.
B. Valves shall be designed so that they can be repacked without removing the bonnet from the valve and the packing shall be adjustable. All nuts, bolts, springs and washers shall be cadmium plated.
C. Valves shall be suitable for underground service and designed for working pressure of 150 P.S.I. The valve and actuator shall be capable of satisfactory operation in either direction of flow against pressure drops to and including 100 P.S.I.
D. The exterior valve surfaces shall be shop painted with two coats of asphalt varnish conforming to Federal Specifications TT-V-5IC.
E. The valves shall be tested in accordance with ANSI/AWWA C504. The CONTRACTOR shall furnish certified copies of reports with every valve stating that the valve has met the requirements of the tests.
F. Plug valve shall be Model 100 Series as manufactured by DeZurik Company, or equal.

2.03 GATE VALVES LESS THAN THREE INCH (3") IPS, BRONZED:

A. Gate valves for use with pipe less than three inches (3") in diameter shall be rated for two hundred (200) psi working pressure, non-shock, block pattern, screwed bonnet, non-rising stem, brass body, and solid wedge. They shall be standard threaded for PVC pipe and have a malleable iron handwheel. Gate valves less than three inches (3") in diameter shall be NIBCO T-113-LF with no substitutions allowed.

2.04 GATE VALVES THREE INCH (3") TO TWELVE INCH (12”):

A. The valves shall be resilient seated and shall conform in design, material, and workmanship to the standards of AWWA C509. Gate valves shall open counterclockwise and shall be of iron body, non-rising stem, and mechanical cut-in joint ends. All resilient seat valves must be bi-directional.
B. Valves shall be coated with a two-part thermosetting epoxy coating on inside of valve and on valve disc. The coating shall conform to the requirements of AWWA C-550. After the factory test and inspection, all ferrous parts of the

valves except finished or bearing surfaces shall be painted with two (2) coats of asphalt varnish, Federal Specification TT-V-51A or approved equal.

C. Gate valves four inches (4") through twelve inches (12") in diameter shall be American Flow Control Series 2500, or U.S. Pipe A-USP1 Resilient Wedge Gate Valves. No Substitutions.

2.05 BUTTERFLY VALVES:

A. Valves shall conform to all requirements of AWWA C504 Standard Class 150B. Valves shall have mechanical - joint-type ends conforming to AWWA C111 and cast iron body conforming to ASTM A126 Class B standards.
B. Valve bodies shall have two shaft bearing hubs cast integrally with the valve bodies. Valve bearings shall be sleeve type bearings with nylon bearings that are self-lubricating and do not have a harmful effect on water. Valve disc shall be cast iron conforming to ASTM A-126 Class B with 316 stainless steel disc edge.
C. Valves shall be Mueller 3211-20, Clow F-5370, American Flow Control, or City of Hollywood approved equal.

2.06 TERMINAL BLOW-OFF VALVES:

A. The terminal blow-off valve assemblies shall be installed in accordance with the details shown in the City of Hollywood Standard Details. The following products shall be used to construct the assemblies:
B. Angle Valves (for terminal blow-off): 2-inch threaded valves with handwheel, bronze body and composition disc. 2-inch angle valves for terminal blow-off shall be NIBCO T311 or ITT Grinnell Fig. No. 3220
C. After the tap has been made and the corporation stop has been installed on a pipe conveying potable water, the exposed exterior surfaces of the stop shall be heavily coated with Kop-Coat Super Hi-Gard 891 White 1898, or approved equal. Where taps are made in a pipe conveying sewerage, the Contractor shall heavily coat the inside of the pipe around the stop and the exposed exterior surfaces of the stop with Bitumastic 300M, by Kop-Coat Co., or Protector 401 for sewer applications.
D. The installation of the terminal blow-off outlet shall include excavation; cutting, threading and installing PVC and galvanized pipe and fittings; tapping the ductile iron plug; concrete thrust block; furnishing and installing angle valve; cutting and placing cast iron riser pipe complete with valve boxes and cover, set in concrete; backfilling and compaction; and all other appurtenant items and work.

2.08 ECCENTRIC PLUG VALVES

A. Equipment Requirements: Plug valves shall be on the non-lubricated, eccentric type with resilient faced plugs, port areas for valves 20 inches and smaller shall be at least 80% of full pipe area. Port area of valves 24 inches and larger shall be at least 70% of full pipe area. The body shall be of semi-steel (ASTM A-126 C1.B) and shall have bolted bonnet which gives access to the intervals of the valve. Seats shall be welded overlay of high nickel content or a stainless steel plate locked in the body cavity. If a plate is used, it shall be replaceable through the bonnet access. Bearings shall be permanently lubricated of stainless steel, bronze or teflon lined, fiber glass backed duralon. Bearing areas shall be isolated form the flow with grit seals. Valves shall have packing bonnets where the shaft protrudes from the grit seals. Valves shall have packing bonnets where the shaft protruded from the valve and the packing shall be self-adjusting chevron type which can be replaced without removing the bonnet. All nuts, bolts, springs and washers shall be stainless steel.

B. Valves shall be designed for a working pressure of 150 PSI CWP. The valve and actuator shall be capable of satisfactory operation in either direction of flow against pressure drops up to and including 100 PSI (for plug valves over 12 inches in diameter). Valves shall be bubble tight in both directions at 100 psi differential.

C. Plug valves over 12" in diameter shall have worm gear operators. The operating mechanism shall be for buried service with a 2 inch square operating nut.

D. Plug valves are to be installed with the sear pointed towards the upstream flow, when specified.

E. Manufacturers or Equal:

1. Clow Valve Co.;
2. DeZurik Corporation;
3. U.S. Pipe.

2.09 BALL VALVES (4-INCH AND SMALLER)

A. General Requirements: Unless otherwise specified or shown, general purpose ball valves in size up to 4-inch shall have manual operators with lever or handwheel. Ferrous surface of 4-inch valves, which will be in contract with water shall be epoxy-coated. All ball valves shall be of best commercial quality, heavy duty construction.

B. Body: All ball valves up to 1-1/2 inch (incl.) in size shall have bronze or forged brass 2 or 3 piece bodies with screwed ends for a pressure rating of not less than 300 psi WOG. Valves 2-inch to 4-inch in size shall have bronze forged brass or steel 2 or 3 piece bodies with flanged ends for a pressure rating of 150 psi.
C. Balls: The balls shall be solid brass or chrome plated bronze, or stainless steel, with large or full openings.
D. Stems: The valves seats shall be of Teflon or Buna N or equal, for bi-directional service and easy replacement.
E. Ball Valve Manufacturers or Equal:

1. Jamesbury Corporation;
2. Jenkins Bros.;
3. Lunkenheimer Flow Control;
4. Wm. Powell Company;
5. Worcester Controls;
6. Valve Primer Corporation.

2.10 CHECK VALVES (NOT USED)

2.11 AIR-VACUUM AND AIR-RELEASE VALVES

A. Air and Vacuum Valves: Air and vacuum valves shall be capable of venting large quantities of air while pipelines are being filled, and allowing air to re-enter while pipelines are being drained. They shall be of the size shown, with flanged or screwed ends to match piping. Bodies shall be of high-strength cast iron. The float, seat, and all moving parts shall be constructed of Type 316 stainless steel. Seat washers and gaskets shall be of a material insuring water tightness with a minimum of maintenance. Valves shall be designed for minimum 150 psi water-working pressure, unless otherwise shown.
B. Air-Release Valves: Air-release valves shall vent accumulating air while system is in service and under pressure and be of the size shown and shall meet the same general requirements as specified for air and vacuum valves except that the vacuum feature will not be required. They shall be designed for a minimum water-working pressure of 150 psi, unless otherwise shown.
C. Combination Air Valves: Combination air valves shall combine the characteristics of air and vacuum valves and air release valves by exhausting accumulated air in systems under pressure and releasing or re-admitting large quantities of air while a system is being filled or drained, respectively. They

shall have the same general requirements as specified for air and vacuum valves.

D.

E. Air Vacuum and Release Manufacturers or Equal:

1. APCO (Valve and Primer Corporation);
2. Golden-Anderson Valve Division (GA Industries, Inc);
3. Val-Matic (Valve and Manufacturing Corporation).

2.12 BEARINGS:

A. Valve bearings shall be the sleeve type.

1. 100% nylon or Teflon for valves 20 inches and smaller.
2. Bearings shall be Teflon with fiberglass backing for valves 24 inches and larger.
3. Bearings shall be self-lubricating and bearing load shall not exceed 1/5 of the compressive strength of the bearing or shaft material.

B. Valve Discs:

1. Discs shall operate through a 90 degree angle from fully closed to fully open.
2. Valve discs shall be cast iron alloy ASTM A436 Type 1, ASTM A48 or ASTM A126 for valves 20 inches and smaller and ASTM A48 cast iron or ASTM A536 ductile iron for valves 24 inches and larger.
3. Valve discs shall have a Type 316 stainless steel seating edge and shall not have any hollow chambers.

C. Shafts and Seals

1. Valve shafts shall be Type 316 stainless steel meeting the minimum requirements of AWWA C504.
2. Valve shafts shall be one piece for valves 20 inches and smaller and two piece for valves 24 inches and larger.
3. Shaft seals shall be self-compensating, split V type and shall be adjustable and replaceable without removing the operator and/or the shaft, except for buried applications.
4. Shaft seals shall be Buna-N unless otherwise specified.

D. Valves for buried service shall be totally enclosed, fully gasketed, grease packed and designed to operate indefinitely when submerged under a minimum 20 feet of water.
E. Manufacturers: Valmatic – American BFV, Pratt – Groundhog, or Dezurik – BAW.

2.13 CORPORATION STOPS (Ball Valve Type)

A. Unless otherwise shown, corporation stops shall be made of brass alloy for key operation, with screwed ends with corporation thread or iron pipe thread, as required. AWWA taper thread for inlet thread and compression type fittings for outlet.
B. Corporation Stops shall be as manufactured by or the Ford Meter Box Company or approved equal.

2.14 TAPPING VALVES AND TAPPING SLEEVES:

A. Tapping Sleeves - See Section 15102 – Tapping Sleeves and Tapping Valve.
B. Tapping Valves – Refer to Gate Valves in Section 2.04.C above.

2.15 VALVE BOXES AND COVERS

A. Valve boxes and covers for all size valves shall be of cast iron construction and adjustable screw-on type. The lid shall have cast in the metal the word “WATER” for the water lines, or “SEWER” for sewage force mains. All valve boxes shall be six-inch (6") nominal diameter and shall be suitable for depths of the particular valve. The stem of the buried valve shall be within twenty-four inches (24") of the finished grade unless otherwise approved by the ENGINEER. Valve boxes for 3” through 20” valves shall be Tyler Union model 6860 Cast Iron screw-type valve box with 5-¼” locking lid, or approved equal.
B. Cast iron valve box shall not rest directly upon the body of the valve or upon the pipe. The box shall be placed in proper alignment and to such an elevation that its top will be at the final grade. Backfilling around both units shall be placed and compacted to the satisfaction of the ENGINEER.

Part 3 - EXECUTION

3.01 VALVE INSTALLATION

A. General: All work shall be performed by skilled workmen experienced in similar installations. All valves shall be adequately supported by clamps, brackets, straps, concrete supports or other devices as shown or specified. All supports

shall be secured to structures by approved inserts or expansion shields and bolts.

B. All valves shall be thoroughly cleaned internally before being installed. Installation of valves shall be done in accordance with this section.

C. All valves, gates, operating units, stem extensions, valve boxes, and accessories shall be installed in accordance with the manufacturer's written instructions and as shown and specified. All gates shall be adequately braced to prevent warpage and bending under the intended use. Valves shall be firmly supported to avoid undue stresses on the pipeInstall valves so that they are easily accessible for operation, visual inspection and preventive maintenance.

D. Location of valves and chain operators: Install valves so as to be accessible for operation and free from interferences when operated. Position so that leakage will not contact any electrical equipment that may be located below.

E. The installation of all underground valves shall include a valve box and riser in accordance with the Details shown on the Plans or in the Standard Details for the various sizes and types of valves to be installed. Riser pipes and valve boxes shall be carefully centered and set flush with the finished grade if in paving, or with the top of the ground if out of paved areas. All valve boxes shall be held in position with concrete as shown on the Plans or in the Standard Details.

F. Upon completion of the Project, but prior to final acceptance, the Contractor in the presence of the Engineer, shall fully open each valve installed by him, except at connections to existing City mains. For valves 16-inch and larger, the Contractor, shall count the number of turns required to operate each valve from a completely closed to a fully opened position, and shall paint the number on the bottom of the valve box lid or manhole cover. Valves at connections to existing City mains shall only be operated by City forces.

G. Valve Accessories: Where combinations of valves, sensors, switches, and controls are specified, it shall be the responsibility of the CONTRACTOR to properly assemble and install these various items so that all systems are compatible and operating properly. The relationship between interrelated items shall be clearly noted on shop drawing submittals.

H. Flange Ends:

1. Flanged valve boltholes shall straddle vertical centerline of pipe.
2. Clean flanged faces, insert gasket and bolts, and tighten nuts progressively and uniformly.

I. Screwed Ends:

1. Clean threads by wire brushing or swabbing.
2. Apply joint compound.

J. Valve Orientation:

1. Install operating stem vertical when valve is installed in horizontal runs of pipe having centerline elevations 4 feet 6 inches or less above finished floor, unless otherwise shown.
2. Install operating stem horizontal in horizontal runs of pipe having centerline elevations between 4 feet 6 inches and 6 feet 9 inches above finish floor, unless otherwise shown.
3. Orient butterfly valve shaft so that unbalanced flows or eddies are equally divided to each half of the disc, i.e., shaft is in the plane of rotation of the eddy.
4. If no plug valve seat position is shown, locate as follows:

   (a) Horizontal Flow: The flow shall produce an “unseating” pressure, and the plug shall open into the top half of valve.
   (b) Vertical Flow: Install seat in the highest portion of the valve.

K. Install a line size ball valve and union upstream of each solenoid valve, in-line flow switch, or other in-line electrical device, excluding magnetic flowmeters, for isolation during maintenance.
L. Locate valve to provide accessibility for control and maintenance. Install access doors in finished walls and plaster ceilings for valve access.
M. Extension Stem for Operator: Where the depth of the valve is such that its centerline is more than 3 feet below grade, furnish an operating extension stem with 2-inch operating nut to bring the operating nut to a point 6 inches below the surface of the ground and/or box cover.
N. Torque Tube: Where operator for quarter-turn valve is located on floor stand, furnish extension stem torque tube of a type properly sized for maximum torque capacity of the valve.

3.02 VALVE CUT-INS ON WATER MAINS

A. Water system shall be maintained under pressure during entire construction. All valve additions shall be performed while the system is in service. No line shall be shut down during construction by CONTRACTOR or others unless approved by the OWNER.
B. Valve Accessories: Where combinations of valves, sensors, switches, and controls are specified, it shall be the responsibility of the CONTRACTOR to properly assemble and install these various items so that all systems are

compatible and operating properly. The relationship between interrelated items shall be clearly noted on shop drawing submittals.

3.03 TESTS AND INSPECTION

A. Valve may be either tested while testing pipelines, or as a separate step.
B. Test that valves open and close smoothly with operating pressure on one side and atmospheric pressure on the other, in both directions for two-way valve and applications.
C. Inspect air and vacuum valves as pipe is being filled to verify venting and seating is fully functional.
D. Count and record number of turns to open and close valve; account for any discrepancies with manufacturer's data.
E. Set, verify, and record set pressures for all relief and regulating valves.
F. Test hydrostatic relief valve seating; record leakage. Adjust and retest to maximum leakage of 0.1 gpm per foot of seat periphery.

- END OF SECTION -

SECTION 15102

TAPPING SLEEVES AND TAPPING VALVES

Part 1 - GENERAL

1.01 SCOPE

A. The Contractor shall furnish and install tapping sleeves and tapping valves, as specified herein. All items not specifically mentioned in these specifications or noted on the Drawings, but which can be reasonably inferred as necessary to make a complete working installation, shall be included.
B. Tapping sleeves, where shown on the Plans, shall fit the existing pipe to be tapped and the Contractor shall determine the outside diameter and type of pipe before ordering the sleeve. Contractor must field verify dimensions, locations, distances and elevations before ordering tapping sleeves. The Contractor shall adjust his work to conform to said field conditions.
C. Only tapping sleeves shall be used for tapping existing mains to connect new mains. Tapping saddles will not be permitted.

1.02 RELATED WORK SPECIFIED ELSEWHERE

A. Section 15000 - Piping General
B. Section 15001 – Water Services and Miscellaneous Fittings

1.03 MANUFACTURE

A. All valves shall be the products of domestic manufacturing firms which have been regularly engaged in the production of valves for at least 5 years. All valves specified herein shall be tested at the factory in accordance with the AWWA Standard Leakage and Hydrostatic Test as modified herein and a certified test report shall be furnished for each valve.

1.04 SUBMITTALS

A. Shop Drawings: Submit shop drawings for all tapping sleeves and valves.
B. For all AWWA valves, submit an affidavit stating the valves and all materials used in their construction conform to the applicable requirements of AWWA C500 as modified herein, that all specified tests have been performed and all test requirements have been met.

Part 2 - PRODUCTS

2.01 TAPPING SLEEVES

A. Tapping sleeves shall be of cast iron construction except as specified below, shall be full-bodied and shall be designed to withstand a working pressure of at least 150 psi.

B. The tapping sleeves, including outlet flanges shall be as dimensioned and thicknesses shall be as required by AWWA/ANSI C110/A21.10. The tapping sleeves shall be mechanical joint ended, on the run, and shall have a connecting flange outlet, with centering groove (for all valves size 12-inch and below and for valves above 12-inch if available from the manufacturer), for connecting to the tapping valve. For tapping sleeves with outlets 12 inches and smaller, the connecting flange joint between the tapping sleeve and the tapping valve shall be in compliance with all applicable provisions of MSS Standard Practice SP60, latest revision, as developed and approved by the Manufacturers Standardization Society of the Valve and Fittings Industry, 127 Park Street N.E. Vienna, VA. 22180. For tapping sleeves with outlets larger than 12 inches, the connecting flange must provide a matching fit with tapping valves by other manufacturers.

C. Each mechanical joint on the tapping sleeve shall be furnished complete with tee-head bolts and nuts complying with ANSI/AWWA C111/A21.11, "Rubber-Gasket Joints for Ductile-Iron and Gray-Iron Pressure Pipe and Fittings" (latest edition). Tee-head bolts and hex nuts shall be of high strength cast iron. Bolts and nuts to join the two halves of the sleeve together shall be standard stainless steel, hex, or tee-head bolts and nuts.

D. Each tapping sleeve shall be furnished complete with all necessary split end gaskets, longitudinal gaskets and two-piece (split) steel glands (follower glands held in place by set screws not acceptable). Gasket shall be shipped separately in suitable protective containers. Material for split end gaskets shall conform to ANSI/AWWA Standard C111/A21.11. Material for longitudinal gaskets shall be rubber conforming to ANSI/AWWA Standard C111/A21.11.

E. The sleeves shall be suitable for use with ductile iron pipe conforming to ANSI/AWWA Standard C151/A21.51, "Ductile-Iron Pipe, Centrifugally Cast in Metal Molds or Sand-Lined Molds, for Water or Other Liquids", with wall thickness and outside diameter as specified in Table 51.4 and 51.5. The sleeves shall also be suitable for use with other cast iron pipe with differing outside diameters and other types of pipe where required.

F. The City will permit the use of the PowerSeal Pipeline Products Corp. 3490MJ Mechanical Joint tapping sleeve as an approved equal to ductile iron flange-outlet tapping sleeves. This unit has a mechanical joint branch outlet tapping

connection which mates with a standard resilient-seated gate valve rather than the tapping flange x mechanical joint ends required by the standard design of tapping sleeves. These units shall be manufactured of Type 304 (18-8) Stainless Steel per ASTM A240, with MJ outlets fabricated of Type 304 (18-8) Stainless Steel per ANSI 21.11. Bolts and nuts shall be made of Type 304 (18-8) Stainless Steel per ASTM A193 and A194, respectively. Stainless steel hex nuts shall be furnished with fusion bonded coating to prevent seizing and galling. Gaskets shall be SBR for potable water use, or Neoprene, EPDM, or Nitrile for sanitary sewer use.

2.02 TAPPING VALVE

A. See Specification Section 15001 - Water Services and Miscellaneous Fittings

Part 3 - EXECUTION

3.01 GENERAL

A. Where shown on the approved plans, the Contractor shall install the tapping sleeves and valves of the indicated size, without taking existing main out of service. Under no circumstances shall be Contractor be permitted to tap these existing mains. The Contractor shall pressure test the tapping sleeve and valve after installation on the main, but prior to tapping operations. The test shall be conducted in the presence of the City's Inspector. No leakage will be permitted at any joint in either the tapping sleeve or tapping valve. Taps shall be made by tapping specialists with credentials acceptable to the City.

B. Tapping valves 16-inch and smaller require the installation of a cast iron or C900 PVC riser pipe, complete with ductile iron valve box and cover, centered over the operator and set in concrete. Tapping valves 16-inch and larger shall be installed in a horizontal position with the operator in the vertical position with valve box over the operator and set in concrete.

C. Where a tapping valve with by-pass gate valve will be installed, the Contractor shall install a valve box over the main valve and a valve box over the by-pass valve. Valve boxes and covers for all size valves shall be of cast iron construction and adjustable screw-on type. The lid shall have cast in the metal the word “WATER” for the water lines, or “SEWER” for sewage force mains. All valve boxes shall be six-inch (6") nominal diameter and shall be suitable for depths of the particular valve. The stem of the buried valve shall be within twenty-four inches (24") of the finished grade unless otherwise approved by the ENGINEER. Valve boxes for 3” through 20” valves shall be Tyler Union

model 6860 Cast Iron screw-type valve box with 5-¼" locking lid, or approved equal.

D. The tapping sleeve and valve shall be installed complete, and the work shall include all necessary excavation, including interlocking sheeting and shoring, backfilling and compaction, surface repairs, and sheeting and shoring outside of the main trench line, dewatering, testing the sleeve and valve, supporting tapping by City forces, constructing the concrete thrust anchor and all other appurtenant items and work. Installation of tapping sleeve shall be in accordance with City of Hollywood Public Utilities Department Standard Details, Specifications Policies and Procedures for Water Distribution.
E. Prior to ordering the tapping sleeve, the Contractor shall excavate and field-verify the type and outside diameter of the main.

3.02 TAPS

A. The Contractor shall comply with all applicable provisions of Subsections 3.01 above, including installation and pressure testing of tapping sleeve and tapping valve in the presence of the City's Inspector.
B. Since cutting equipment used for this type of installation is of a special design, the Contractor shall make provisions for furnishing a tapping specialist to perform actual tapping operation. The qualifications of the tapping specialist shall be forwarded to the City prior to any tapping work. The Contractor shall also furnish all incidental equipment necessary to operate the tapping machine.
C. The tapping valve shall be installed in the horizontal position with the operator in the vertical position, and shall include a valve box cover. Tapping valves shall be left in the closed position.
D. When the invert of the tapping valve is under water, interlocking sheeting and tremie concrete shall be used, unless otherwise approved by the City. Seal the perimeter of all pipes passing through the sheeting below the water table. Only minimum seepage will be permitted. The cofferdam must be designed and sealed by a State of Florida, P.E. No work will be permitted within the cofferdam until it is demonstrated to the City to be dry. Approval to remove the initial water in the cofferdam must be obtained from the City and other governmental agencies having jurisdiction over the work.
E. All tapping operations shall be conducted under the direct supervision of City of Hollywood Utility Inspector or Engineer. All operations shall have prior approval of the City.

3.03 RECORD DRAWINGS

A. Record Drawing shall be prepared in accordance with Section 01300
B. The location and elevation for each valve, tapping flange outlet, fitting, service line and other appurtenances along the pipeline shall be recorded by the Contractor's Florida Registered Land Surveyor.

- END OF SECTION -

SECTION 15995

PIPELINE TESTING AND DISINFECTION

Part 1 - GENERAL

1.01 THE REQUIREMENT

A. The CONTRACTOR shall perform flushing and testing of all pipelines and appurtenant piping, complete, including conveyance of test water from CITY-designated source to point of use and all disposal thereof, all in accordance with the requirements of the Contract Documents.

1.02 REFERENCE SPECIFICATIONS, CODES, AND STANDARDS

A. Commercial Standards

ANSI / AWWA B300	Hypochlorites
ANSI / AWWA B301	Liquid Chlorine
ANSI / AWWA C651	Disinfecting Water Mains

1.03 SUBMITTALS

A. A testing schedule, including proposed plans for water conveyance, control, and disposal shall be submitted in writing for approval before testing is to start.
B. The CONTRACTOR shall submit disinfection test reports and hydrostatic test reports in accordance with Sections 01300 entitled “Submittals” and Section 01700 entitled “Project Closeout”.

Part 2 - PRODUCTS

2.01 MATERIALS REQUIREMENTS

A. All equipment, temporary valves or bulkheads, temporary vents or drains, pumps, piping, gauges or other water control equipment and materials required for testing of mains shall be furnished, installed and operated by the CONTRACTOR subject to the CITY'S review. No materials shall be used which would be injurious to the construction or its future function.
B. Pumps shall be of a non-pulsating type suitable for this application and gauge accuracy certification may be required at the Engineer of Record's discretion.
C. All pressure and leakage testing shall be done in the presence of a representative of the City as a condition precedent to the approval and acceptance of the system.
D. All water mains shall be flushed to remove all sand, debris, rock and other foreign matter. Dispose of the flushing water without causing a nuisance or property damage.

Part 3 - EXECUTION

3.01 GENERAL

A. Notify the ENGINEER and CITY 48 hours in advance to obtain CITY"S approval to commence testing and/or disinfection of any particular structure and/or pipeline.
B. Unless otherwise provided herein, water for flushing and testing pipelines will be furnished by the CITY; however, the CONTRACTOR shall make all necessary provisions for conveying the water from the CITY-designated source to the points of use.
C. All pressure and gravity pipelines shall be tested. All testing operations shall be performed in the presence of the CITY.

3.02 FLUSHING AND CLEANING

A. At the conclusion of the installation work, the CONTRACTOR shall thoroughly clean all new liquid conveying pipe by flushing with water or other means to remove all dirt, stones, pieces of wood, etc., which may have entered the pipe during the construction period. If after this cleaning any obstructions remain, they shall be corrected by the Contractor, at his own expense, to the satisfaction of the CITY. Liquid conveying pipelines shall be flushed at the rate of at least 2.5 feet per second for a duration suitable to the CITY or shall be flushed by other methods approved by the CITY.
B. After the pipelines are cleaned and if the groundwater level is above the pipe, or following a heavy rain, the ENGINEER will examine the pipe for leaks. If defective pipes or joints are discovered at this time, they shall be repaired or replaced by the Contractor

3.03 HYDROSTATIC TESTING OF PIPING (WATER AND FORCE MAINS)

A. Following pipeline flushing, the CONTRACTOR shall hydrostatically test all pipelines either in sections or as a unit. The section of main being tested shall be limited to a maximum length of 2000 feet. No section of the pipeline shall be tested until all field-placed concrete or mortar has attained an age of 14 days. The test shall be made by closing valves when available, or by placing temporary bulkheads in the pipe and filling the line slowly with water.
B. The CONTRACTOR shall provide all reaction blocking and necessary plugs and caps required to test all piping installed as part of this Contract. The CONTRACTOR shall supply and install temporary air release valves for purposes of facilitating proper hydrostatic testing conditions. Location of the ARV's shall be as per the instructions given by the ENGINEER. The

CONTRACTOR shall be responsible for ascertaining that all test bulkheads are suitably restrained to resist the thrust of the test pressure without damage to, or movement of, the adjacent pipe. Care shall be taken to see that all air vents are open during filling. The CONTRACTOR shall be responsible for removing temporary ARV's, reaction blocking and temporary plugs and caps upon the successful completion of the testing and shall be responsible for all associated site restorations resulting from his/her work.

C. The pipeline shall be filled at a rate which will not cause any surges or exceed the rate at which the air can be released through the air valves at a reasonable velocity and all the air within the pipeline shall be properly purged. After the pipeline or section thereof has been filled, it shall be allowed to stand under a slight pressure for at least 24 hours to allow the concrete or mortar lining, as applicable, to absorb what water it will and to allow the escape of air from any air pockets. During this period, bulkheads, valves, and connections shall be examined for leaks. If leaks are found, corrective measures satisfactory to the CITY shall be taken.

D. The hydrostatic test shall consist of holding a test pressure of 150 psi on the pipeline for a period of 2 hours and in accordance with ANSI/AWWA Standard C605-05. All visible leaks shall be repaired in a manner acceptable to the CITY.

E. The maximum allowable leakage shall be determined by the following formula:

$$L = \frac{S \bullet D \bullet \sqrt{P}}{148{,}000}$$

Where:

L = Allowable leakage for system in gallons per hour
D = Pipe diameter in inches
S = Length of lines in lineal feet
P = Average test pressure in psi

F. When testing against closed metal-seated valves, an additional leakage per closed valve of 0.0078 gallon / hour / inch of nominal valve size shall be allowed. Any questions pertaining to procedures used during the test shall be decided by the ENGINEER.

G. The test is usually maintained for two hours, but it may be continued for one additional hour if it becomes apparent that the leakage is equal to or greater than the amount allowable. Water supplied to the main during the test to maintain the required pressure shall be measured by a 5/8-inch meter installed on the discharge side of the test pump, or by pumping from a calibrated

container. A hose bib connection will be provided by the CONTRACTOR to accept the test gauge supplied by the OWNER.

H. In the case of pipelines that fail to pass the prescribed leakage test, the CONTRACTOR shall determine the cause of the leakage, shall take corrective measures necessary to repair the leaks, and shall again test the pipelines. No installation will be acceptable by the OWNER until the leakage is less than the allowable for the system.
I. The CONTRACTOR shall submit to the CITY a detailed description of the testing procedures to be utilized.

3.04 DISINFECTION (POTABLE WATER LINES ONLY)

A. After the water mains have satisfied the leakage requirements, they shall be flushed through openings of the required size as detailed in ANSI/AWWA Standard C601 latest revision. The main shall then be disinfected in accordance with the provisions of the applicable sections of the above-named specifications. On main breaks, cut-ins, etc., a liberal application of calcium hypochlorite shall be made.
B. Mains shall not be put into domestic service until the necessary bacteriological samples have been approved by the applicable regulatory agencies.
C. Provide list of equipment required and a disinfection plan to execute the work of this Section.
D. Inject the required amount of disinfectant to yield a minimum chlorine content of 50 ppm into piping system.
E. Allow solution to remain in the pipes for twenty-four hours or longer, if required, to destroy all harmful bacteria.
F. Operate all valves and other appurtenances during disinfection to assure the sterilizing mixture is dispersed into all parts of the system.
G. After the solution has been retained for the required time, pipes shall be flushed and filled with municipal domestic water. Sterilizing water shall be disposed of in an approved manner. Sterilizing water shall not be allowed to flow into a waterway without reducing chlorine concentrations to a safe level. The CONTRACTOR shall be responsible for meeting all applicable requirements and acquiring all necessary permits for this work.

3.05 BACTERIOLOGICAL ANALYSES

A. Sample points for the purpose of collecting water samples for bacteriological analysis shall be provided by the contractor as indicated on the plans and as directed by the Health Department at no additional cost to the Contract.

Sampling points may be temporary and consist of a corporation tap, 1-inch copper tubing and 1-inch gate valve specifically provided for sample collection. Temporary sampling points may not be removed until the sample results are approved by the Health Department. Sampling points may be permanent, such as a terminal blow-off, fire hydrant, etc.

B. The Contractor shall be responsible for retaining the services of a testing laboratory certified by State of Florida, and approved by the BCHD in the collection, storage and analysis of water samples from public water systems in accordance with Chapter 62-550.550 (FAC), “Certified Laboratories and Analytical Methods for Public Water Systems”.
C. Bacteriological samples shall be collected from all sampling points shown on the plans, or as directed by the Health Department, and tested against the drinking water standards from Chapter 62-550.310 (FAC), “Primary Drinking Water Standards: Maximum Contaminant Levels and Maximum Residual Disinfectant Levels”. Samples shall be tested using methods from AWWA M12, “Simplified Procedures for Water Examination”.
D. Samples shall be collected and tested on each of two successive days. The disinfection process shall be repeated if any individual test results reflect presence of harmful bacteria in the water.
E. The Contractor shall be responsible for any re-chlorination and re-testing that may be required until the BCHD’s approval is obtained. The Contractor shall be responsible for the disposal of all water flushed from the system and shall safeguard all adjoining properties from damage from flooding. The Contractor shall exercise due care in the protection of private property from water damage due to his operations. In addition, the Contractor shall assume complete liability for any damage which was directly or in-directly caused by his operations.
F. No public water mains shall be placed into service until the results of the drinking water analyses are approved by the BCHD, and until they issue a letter releasing the main for service.
G. Submittals

    1. Submit name of testing laboratory and evidence of certification with the State and County Health Departments.
    2. Submit three copies of reports.

H. Project Record Documents

    1. Submit reports under provisions of Sections entitled “Submittals” and “Project Closeout”.
    2. Bacteriological report; accurately record:

(a) Date issued, project name, and testing laboratory name, address, and telephone number.
(b) Time and date of water sample collection.
(c) Name of person collecting sample.
(d) Test locations.
(e) Initial and twenty-four- hour disinfectant residuals in ppm for each outlet tested.
(f) Coliform bacteria test results for each outlet tested.
(g) Certification that water conforms, or fails to conform to bacterial standards of State of Florida.
(h) Bacteriologist's signature.

3.06 TESTS FOR DRAIN AND GRAVITY SEWER LINES:

A. Drain and gravity sewer lines shall be tested for infiltration and exfiltration.
B. The allowable limits of infiltration or exfiltration (leakage) for the drain or sewer lines, or any portion thereof, shall not exceed the greater of the following:

1. 100 gallons per inch of internal pipe diameter per mile of pipe per 24 hours with no allowance for laterals or manholes
2. As required by the Broward County/FDEP permit
3. As per Chapter 33.94 of Recommended Standards for Wastewater Facilities (2004 Edition). Duration of test shall be a minimum of two hours.

C. The system may be tested for infiltration or exfiltration in whole or in parts, as directed by the Engineer. Prior to testing for infiltration, the system shall be pumped out so that normal infiltration conditions exist at the time of testing. The amounts of infiltration or exfiltration shall be determined by pumping into or out of calibrated drums, or by other approved methods.
D. The exfiltration test will be conducted by filling the portion of the system being tested with water to a level which will provide a minimum head of 2-feet in a lateral connected to the test portion, or in the event there are no laterals in the test portion, a minimum difference in elevation of 5-feet between the crown of the highest portion of the drain or sewer and the test level.

- END OF SECTION -

SECTION 15997

POLYETHYLENE ENCASEMENT FOR CAST/DUCTILE
IRON PIPE, FITTINGS, VALVES AND RISERS

Part 1 - GENERAL

1.01 DESCRIPTION

A. As required by the ENGINEER, all cast/ductile iron pipe, fittings, valves and risers shall be encased with polyethylene film in order to prevent contact between the pipe and the surrounding soil for the purpose of corrosion protection, following all requirements of this section.

1.02 RELATED WORK SPECIFIED ELSEWHERE

A. Section 01300 - Submittals
B. Section 15000 – Piping General
C. Section 15060 – Piping and Fittings

1.03 REFERENCED SPECIFICATIONS, CODES AND STANDARDS

A. AWWA C105-10
B. ANSI A21.5
C. ASTM D149
D. ASTM D882
E. ASTM D1248
F. ASTM D1709-B
G. ASTM D1922
H. ASTM D4976
I. NT4112-05

1.04 SUBMITTALS

A. Submit following Section 01300.

1. Manufacturer’s product data for polyethylene tubing
2. Manufacturer’s product data for polyvinyl tape

Part 2 - PRODUCTS

2.01 MATERIALS

A. Polyethylene Tube:

1. Only virgin polyethylene material shall be approved. The material shall be 8 mil minimum, Group 2, Linear Low Density, flat tube polyethylene film

meeting or exceeding the requirements of AWWA C105-10, ANSI A21.5-88, ASTM D4976 and NT4112-05, and having the following properties:

Tensile Strength	3600 psi, minimum - ASTM D882
Elongation	800%, minimum - ASTM D882
Dielectric Strength	800 V/mil, minimum - ASTM D149
Impact Resistance	600 g, minimum - ASTM D1709-B
Propagation Tear Resistance	2550 gf, minimum - ASTM D1922

2. The film shall be marked showing trademark, year of manufacture, type of resin, specification conformance, applicable pipe sizes and the words "warning: corrosion protection-repair any damage."
3. Tube size will be as listed below:

Nominal pipe diameter (in.)	**Polyethylene flat tube width (in.)**
4	16
5	20
8	24
12	30
16	37
20	45
24	54
30	67
36	81
42	95
48	108
54	121

B. Polyvinyl Tape:

1. The polyethylene encasement shall be secured to the cast/ductile iron using 6-inch, 10-mil "all weather" tape with polyvinyl film backing. On the tape shall be marked the UPC code and mil thickness designation. Pipe-wrap tape shall be moisture resistant, anti-corrosive, conform and adhere to both metal and plastic.

Part 3 - EXECUTION

3.01 POLYETHYLENE ENCASEMENT

A. The polyethylene sleeve (polywrap) shall be installed in accordance with ANSI/AWWA C105/A21.5, "Polyethylene Encasement for Ductile-Iron Piping

for Water and Other Liquids". The polywrap shall be placed on the cast/ductile iron pipe so that no dirt or bedding material comes in contact with the pipe. All lumps of clay, mud, cinders, etc., on the pipe surface should be removed before the pipe is covered with polyethylene. If the polyethylene is damaged, it must be repaired before the trench is backfilled.

1. Small holes or tears can be repaired with a piece of tape placed over the hole. Large holes or tears should be repaired by taping another piece of polyethylene over the hole.
2. Overlaps, ends, and repairs can be held in place with tape or plastic tie straps until the trench is backfilled.

B. General installation recommendations:

1. When lifting polywrapped pipe with a backhoe, use a fabric-type "sling" or padded cable to protect the polyethylene.
2. When installing polywrap below the water table or in areas subject to tidal action, seal as thoroughly as possible both ends of each polyethylene tube with adhesive tape or plastic tie straps at the joint overlap. Also, place tape or plastic tie straps around the pipe at two (2) foot intervals.
3. Special care shall be taken to prevent damage to wrapping when placing backfill.
4. Quality of installation is more important than the actual sequence followed.

C. Per AWWA C105-05, there are 3 installation methods:

1. Method "A" - The polyethylene tube should be cut to lengths that provide a one foot overlap beyond each end of a pipe section. Slip the tubing over the pipe with the printed side up, and bunch it back to clear both ends. A shallow bell hole should be made to facilitate installation of the polyethylene. Lower pipe into position and make up the joint. Pull tubing over the joint from the preceding pipe length and tape it securely to the new pipe length. Overlap the polyethylene from the new pipe length back over the same joint and tape in place on the preceding pipe barrel. Pull the polyethylene along the length of the new pipe, folding excess tubing over the top of the pipe barrel and securing it every 3 to 4 feet. Keep the excess polyethylene for the overlap of the next joint bunched back from the joint in preparation for making the next joint. Repeat this process for each polyethylene taped into place.
2. Method "B" - Cut the polyethylene tube 1 ft. shorter than the length of pipe sections. Slip the tube around the pipe so as to allow 6 in. of bare pipe at

each end. Before making a joint, slip a 3 ft. Length of polyethylene tube over the preceding pipe section. Overlap by at least 1 ft. and secure, after joint is made.

3. Method “C” - Wrap odd shaped fitting with sheet or split length of polyethylene tube by passing the sheet under the fitting and bringing it up around the body. Make seams by bringing it folding over twice, and tapping down. Tape the sheet securely in place at valve stems and other penetrations.
4. Pipe-shape fittings (bends, reducers, etc.) shall be treated according to Methods "A" and "B". Odd shaped fittings (valves, tees, etc.) shall be treated according to Method “C”.

Part 4 - MEASUREMENT AND PAYMENT

4.01 There is no separate pay item for polyethylene encasement of pipe/valves/fittings. Cost of polyethylene encasement shall be included in the unit cost of furnishing and installing ductile iron pipe and fittings. Polyethylene pipe wrap shall be installed and secured in accordance with all of the above requirements, and as approved by the ENGINEER for a complete installation.

END OF SECTION

GENERAL NOTES:

1. THE INFORMATION PROVIDED IN THESE DRAWINGS IS SOLELY TO ASSIST THE CONTRACTOR IN ASSESSING THE NATURE AND EXTENT OF CONDITIONS WHICH WILL BE ENCOUNTERED DURING THE COURSE OF THE WORK. THE CONTRACTORS ARE DIRECTED, PRIOR TO BIDDING, TO CONDUCT WHATEVER INVESTIGATIONS THEY DEEM NECESSARY TO ARRIVE AT THEIR OWN CONCLUSION REGARDING THE ACTUAL CONDITIONS THAT WILL BE ENCOUNTERED, AND UPON WHICH BIDS WILL BE BASED.

2. ALL CONSTRUCTION AND MATERIALS SHALL CONFORM TO APPLICABLE STANDARDS AND SPECIFICATIONS OF THE CITY OF HOLLYWOOD DEPARTMENT OF PUBLIC UTILITIES, ENGINEERING AND CONSTRUCTION SERVICES DIVISION (ECSD), AND ALL OTHER LOCAL, STATE AND NATIONAL CODES, WHERE APPLICABLE.

3. LOCATIONS, ELEVATIONS, SIZES, MATERIALS, ALIGNMENTS, AND DIMENSIONS OF EXISTING FACILITIES, UTILITIES AND OTHER FEATURES ARE SHOWN ACCORDING TO THE BEST INFORMATION AVAILABLE AT THE TIME OF THE PREPARATION OF THESE PLANS; AND DO NOT PURPORT TO BE ABSOLUTELY CORRECT. ALSO, THERE MAY HAVE BEEN OTHER IMPROVEMENTS, UTILITIES, ETC., WITHIN THE PROJECT AREA WHICH WERE CONSTRUCTED AFTER THE PREPARATION OF THESE PLANS AND/OR THE ORIGINAL SITE SURVEY. THE CONTRACTOR SHALL VERIFY THE LOCATIONS, ELEVATIONS, AND OTHER FEATURES AFFECTING HIS/HER WORK PRIOR TO CONSTRUCTION, AND NOTIFY THE ENGINEER IMMEDIATELY WHEN CONFLICT BETWEEN DRAWINGS AND ACTUAL CONDITIONS ARE DISCOVERED. THE ENGINEER ASSUMES NO RESPONSIBILITY FOR ANY FACILITIES SHOWN OR NOT SHOWN ON THE PLANS. THE CONTRACTOR SHALL WORK AS NEEDED TO AVOID CONFLICT WITH EXISTING UTILITIES (NO ADDITIONAL COST SHALL BE PAID FOR THIS WORK). EXISTING UTILITIES SHALL BE MAINTAINED IN SERVICE DURING CONSTRUCTION UNLESS OTHERWISE APPROVED BY THE RESPECTIVE UTILITY OWNER.

4. THE CONTRACTOR SHALL COORDINATE WITH ALL UTILITIES TO ARRANGE FOR THE RELOCATION AND TEMPORARY SUPPORT OF UTILITY FEATURES, ETC. AS NECESSARY TO COMPLETE THE WORK.

5. IT SHALL BE THE CONTRACTOR'S RESPONSIBILITY TO LOCATE AND PROTECT ANY AND ALL EXISTING UTILITIES ON THIS PROJECT, AND TO ENSURE THAT EXISTING UTILITIES ARE MAINTAINED IN SERVICE DURING CONSTRUCTION UNLESS APPROVED OTHERWISE BY THE UTILITY OWNER.

6. CONTRACTOR SHALL ADJUST ALL EXISTING UTILITY CASTINGS INCLUDING VALVE BOXES, MANHOLES, HAND-HOLES, PULL-BOXES, STORMWATER INLETS, AND SIMILAR STRUCTURES IN CONSTRUCTION AREA TO BE OVERLAID WITH ASPHALT PAVEMENT.

7. THE CONTRACTOR IS REQUIRED TO OBTAIN ALL APPLICABLE CONSTRUCTION AND ENVIRONMENTAL PERMITS PRIOR TO THE START OF CONSTRUCTION.

8. THE CONTRACTOR SHALL NOTIFY ECSD AT LEAST 48 HOURS PRIOR TO BEGINNING CONSTRUCTION.

9. PRIOR TO THE COMMENCEMENT OF CONSTRUCTION AND INSTALLATION OF THE PROPOSED IMPROVEMENTS, SHOP DRAWINGS SHALL BE SUBMITTED TO ECSD IN ACCORDANCE WITH THE CONTRACT DOCUMENT'S REQUIREMENTS, FOR APPROVAL. IN ADDITION, IT IS THE CONTRACTOR'S RESPONSIBILITY TO OBTAIN ANY OTHER AGENCY SHOP DRAWING APPROVAL, IF REQUIRED.

10. THE CONTRACTOR SHALL NOTIFY ECSD IMMEDIATELY FOR ANY CONFLICT ARISING DURING CONSTRUCTION OF ANY IMPROVEMENTS SHOWN ON THESE DRAWINGS. THIS WORK BY THE CONTRACTOR SHALL BE CONSIDERED INCIDENTAL TO THE CONTRACT AND NO ADDITIONAL COMPENSATION SHALL BE ALLOWED.

11. ELEVATIONS SHOWN ARE IN FEET AND ARE REFERENCED TO THE NORTH AMERICAN VERTICAL DATUM OF 1988 (NAVD 88).

GENERAL NOTES (CONTINUED):

12. CITY OF HOLLYWOOD SHALL NOT PROVIDE STAGING / STORAGE AREA. CONTRACTOR SHALL SECURE STAGING / STORAGE AREA AS NECESSARY FOR CONSTRUCTION WORK.

13. CONTRACTOR SHALL HAUL AWAY EXCESSIVE STOCKPILE OF SOIL FOR DISPOSAL EVERY DAY. NO STOCKPILE SOIL IS ALLOWED TO BE LEFT ON THE CONSTRUCTION SITE OVER NIGHT.

14. CONTRACTOR SHALL CLEAN / SWEEP THE ROAD AT LEAST ONCE DAY OR AS REQUIRED BY THE ENGINEER.

15. CONTRACTOR SHALL PROTECT CATCH BASINS WITHIN / ADJACENT TO THE CONSTRUCTION SITE AS REQUIRED BY NPDES REGULATIONS.

16. THE CITY OF HOLLYWOOD HAS A NOISE ORDINANCE (CHAPTER 100) WHICH PROHIBITS EXCAVATION AND CONSTRUCTION BEFORE 8:00 A.M. AND AFTER 6:00 P.M., MONDAY THROUGH SATURDAY AND ALL DAY SUNDAY.

17. SUITABLE EXCAVATED MATERIAL SHALL BE USED IN FILL AREAS. NO SEPARATE PAY ITEM FOR THIS WORK, INCLUDE COST IN OTHER ITEMS.

18. ALL ROAD CROSSINGS ARE OPEN CUT AS PER THE REQUIREMENTS OF THE ECSD UNLESS OTHERWISE NOTED ON THE DRAWINGS.

19. THE CONTRACTOR SHALL REPLACE ALL PAVING, STABILIZING EARTH, DRIVEWAYS, PARKING LOTS, SIDEWALKS, ETC. TO SATISFY THE INSTALLATION OF THE PROPOSED IMPROVEMENTS WITH THE SAME TYPE OF MATERIAL THAT WAS REMOVED DURING CONSTRUCTION OR AS DIRECTED BY ECSD FIELD ENGINEER.

20. THE CONTRACTOR SHALL NOT ENCROACH INTO PRIVATE PROPERTY WITH PERSONNEL, MATERIAL OR EQUIPMENT. IN CASE WORK ON PRIVATE PROPERTY IS NEEDED, A CITY OF HOLLYWOOD "RIGHT OF ENTRY" FORM MUST BE SIGNED BY PROPERTY OWNER AND THE DIRECTOR OF PUBLIC UTILITIES. THE CONTRACTOR IS RESPONSIBLE TO MAINTAIN ACCESS AT ALL TIMES TO PRIVATE HOMES/BUSINESSES.

21. THE CONTRACTOR SHALL BE RESPONSIBLE FOR DAMAGE, REMOVAL OR MODIFICATION, CAUSED TO ANY IRRIGATION SYSTEM (PRIVATE OR PUBLIC) ACCIDENTALLY OR PURPOSELY. THE CONTRACTOR SHALL REPLACE ANY DAMAGED, REMOVED OR MODIFIED IRRIGATION PIPES, SPRINKLER HEADS OR OTHER PERTINENT APPURTENANCES TO MATCH OR EXCEED EXISTING CONDITIONS AT NO ADDITIONAL COST TO THE CITY.

22. MAIL BOXES, FENCES OR OTHER PRIVATE PROPERTY DAMAGED DURING THE CONSTRUCTION OF THE PROPOSED IMPROVEMENTS SHALL BE REPLACED TO MATCH OR EXCEED EXISTING CONDITION.

23. CONTRACTOR SHALL PROVIDE MAINTENANCE OF TRAFFIC IN ACCORDANCE WITH FDOT STANDARDS AND CITY OF HOLLYWOOD DEPARTMENT OF PUBLIC UTILITIES STANDARDS.

24. NO TREES ARE TO BE REMOVED OR RELOCATED WITHOUT PRIOR APPROVAL FROM THE ECSD FIELD ENGINEER.

25. THE CONTRACTOR IS RESPONSIBLE FOR OBTAINING THE NECESSARY TREE REMOVAL OR RELOCATION PERMITS FROM THE CITY OF HOLLYWOOD BUILDING DEPARTMENT FOR TREES LOCATED IN THE PUBLIC RIGHT OF WAY.

26. IT IS THE INTENT OF THESE PLANS TO BE IN ACCORDANCE WITH APPLICABLE CODES AND AUTHORITIES HAVING JURISDICTION. ANY DISCREPANCIES BETWEEN THESE PLANS AND APPLICABLE REGULATORY STANDARDS / REQUIREMENTS SHALL BE IMMEDIATELY BROUGHT TO THE ATTENTION OF ECSD.

GENERAL NOTES (CONTINUED):

27. THE CONTRACTOR SHALL BE RESPONSIBLE FOR MAINTAINING THE INTEGRITY OF AND MAKING THE REPAIRS TO EXISTING PAVEMENT, SIDEWALKS, PIPES, CONDUITS, CURBS, CABLES, ETC., WHETHER OR NOT SHOWN ON THE PLANS DAMAGED AS A RESULT OF THE CONTRACTORS OPERATIONS AND/OR THOSE OF HIS SUBCONTRACTORS, AND SHALL RESTORE THEM PROMPTLY AT NO ADDITIONAL EXPENSE TO THE OWNER. CONTRACTOR SHALL REPORT ANY DAMAGE TO SIDEWALK, DRIVEWAY, ETC., PRIOR TO BEGINNING WORK IN ANY AREA.

28. WHERE NEW PAVEMENT MEETS EXISTING, CONNECTION SHALL BE MADE IN A NEAT STRAIGHT LINE AND FLUSH WITH EXISTING PAVEMENT TO MATCH EXISTING CONDITIONS.

29. UNDER NO CIRCUMSTANCES SHALL THE CONTRACTOR LEAVE EXCAVATED TRENCHES, OR PARTS OF, EXPOSED OR OPENED AT THE END OF THE WORKING DAY, WEEKENDS, HOLIDAYS OR OTHER TIMES, WHEN THE CONTRACTOR IS NOT WORKING, UNLESS OTHERWISE DIRECTED. ALL TRENCHES SHALL BE COVERED, FIRMLY SECURED AND MARKED ACCORDINGLY FOR PEDESTRIAN / VEHICULAR TRAFFIC.

30. ALL EXCAVATED MATERIAL REMOVED FROM THIS PROJECT SHALL BE DISPOSED OF OFF THE PROPERTY BY THE CONTRACTOR AT THE CONTRACTOR'S EXPENSE.

31. ALL DUCTILE IRON PRODUCTS SHALL BE DOMESTIC MADE HEAVY DUTY CLASSIFICATION SUITABLE FOR HIGHWAY TRAFFIC LOADS, OR 20,000 LB.

32. ALL GRASSED AREAS AFFECTED BY CONSTRUCTION SHALL BE RE-SODDED.

33. THE CONTRACTOR SHALL BE RESPONSIBLE FOR THE PROVISION, INSTALLATION AND MAINTENANCE OF ALL TRAFFIC CONTROL AND SAFETY DEVICES, IN ACCORDANCE WITH SPECIFICATIONS OF THE LATEST REVISION OF FDOT DESIGN STANDARDS. IN ADDITION, THE CONTRACTOR IS RESPONSIBLE FOR THE RESETTING OF ALL TRAFFIC CONTROL AND INFORMATION SIGNAGE REMOVED DURING THE CONSTRUCTION PERIOD.

34. EXCAVATED OR OTHER MATERIAL STORED ADJACENT TO OR PARTIALLY UPON A ROADWAY PAVEMENT SHALL BE ADEQUATELY MARKED FOR TRAFFIC SAFETY AT ALL TIMES.

35. TEMPORARY PATCH MATERIAL MUST BE ON THE JOB SITE WHENEVER PAVEMENT IS CUT, OR THE CITY'S INSPECTOR WILL SHUT THE JOB DOWN.

36. CONTRACTOR MUST PROVIDE FLASHER ARROW SIGNAL FOR ANY LANE THAT IS CLOSED OR DIVERTED.

37. CONTRACTOR SHALL NOTIFY LAW ENFORCEMENT AND FIRE PROTECTION SERVICES TWENTY-FOUR (24) HOURS IN ADVANCE OF TRAFFIC DETOUR IN ACCORDANCE WITH SECTION 336.07 OF FLORIDA STATUTES.

38. CONTRACTOR TO RESTORE PAVEMENT TO ORIGINAL CONDITION AS REQUIRED.

39. CONTRACTOR SHALL BE RESPONSIBLE FOR PROVIDING DEWATERING PER SPECIFICATION SECTION 02140 DEWATERING.

GENERAL NOTES (CONTINUED):

40. THE CONTRACTOR SHALL GIVE AT LEAST 48 HOURS NOTICE TO UTILITY COMPANIES TO PROVIDE FOR THE LOCATION OF EXISTING UNDERGROUND UTILITIES IN ADVANCE OF CONSTRUCTION. CONTACT UTILITIES NOTIFICATION CENTER AT 811 OR 1-800-432-4770 (SUNSHINE ONE-CALL OF FLORIDA).

41. WHEN PVC PIPE IS USED, A METALLIZED MARKER TAPE SHALL BE INSTALLED CONTINUOUSLY 18" ABOVE THE PIPE. THE MARKER TAPE SHOULD BE IMPRINTED WITH A WARNING THAT THERE IS BURIED PIPE BELOW. THE TAPE SHALL BE MAGNA TEC, AS MANUFACTURED BY THOR ENTERPRISES INC. OR APPROVED EQUAL.

42. ALL CONNECTIONS TO EXISTING MAINS SHALL BE THE RESPONSIBILITY OF THE CONTRACTOR. WATER CONNECTIONS SHALL BE METERED, AND THE COST OF WATER AND TEMPORARY METER SHALL BE BORNE BY THE CONTRACTOR.

43. A COMPLETE AS-BUILT SURVEY SHALL BE ACCURATELY RECORDED OF THE UTILITY SYSTEM DURING CONSTRUCTION. AS-BUILT SURVEY SHALL BE SUBMITTED TO ECSD SIGNED AND SEALED BY A FLORIDA REGISTERED SURVEYOR PRIOR TO FINAL INSPECTION AND ACCEPTANCE OF PROJECT. THE COST OF SIGNED AND SEALED AS-BUILTS SHALL BE COVERED IN OVERALL BID. THE AS-BUILT SURVEY SHALL INCLUDE:

    a. PLAN VIEW SHOWING THE HORIZONTAL LOCATIONS OF EACH MANHOLE, INLET, VALVE, FITTING, BEND AND HORIZONTAL PIPE DEFLECTIONS WITH COORDINATES AND IN REFERENCE TO A SURVEY BASELINE OR RIGHT-OF-WAY CENTERLINE.

    b. THE PLAN VIEW SHALL ALSO SHOW SPOT ELEVATIONS OF THE TOP OF THE MAIN (WATER MAIN AND FORCE MAIN) OR PIPE INVERTS (GRAVITY MAINS) AT INTERVALS NOT TO EXCEED 100 FEET AS MEASURED ALONG MAIN. THE PLAN VIEW SHALL ALSO INCLUDE SPOT ELEVATIONS AT EACH MANHOLE, INLET, VALVE, FITTING, BEND AND VERTICAL PIPE DEFLECTION.

    c. THE PLAN VIEW SHALL ALSO SHOW THE HORIZONTAL SEPARATION FROM UNDERGROUND UTILITIES IMMEDIATELY ADJACENT OR PARALLEL TO THE NEW MAIN.

    d. PROFILE VIEW WITH SPOT ELEVATIONS OF THE TOP OF THE MAIN (WATER MAIN AND FORCE MAIN) OR PIPE INVERT (GRAVITY MAIN) AND OF THE FINISHED GRADE OR MANHOLE RIM DIRECTLY ABOVE THE MAIN AT INTERVALS NOT TO EXCEED 100 FEET AS MEASURED ALONG THE MAIN. THE PROFILE VIEW SHALL ALSO INCLUDE SPOT ELEVATIONS AT EACH MANHOLE, INLET, VALVE, FITTING, BEND AND VERTICAL PIPE DEFLECTION.

    e. THE PROFILE VIEW SHALL SHOW ALL UNDERGROUND UTILITIES CROSSING THE NEW MAIN AND THE VERTICAL SEPARATION PROVIDED BETWEEN THAT UNDERGROUND UTILITY AND THE NEW MAIN.

    f. ALL CADD FILES MUST BE CREATED FOLLOWING THE CITY OF HOLLYWOOD "SURVEY / AS-BUILT CAD DRAWING STANDARDS"

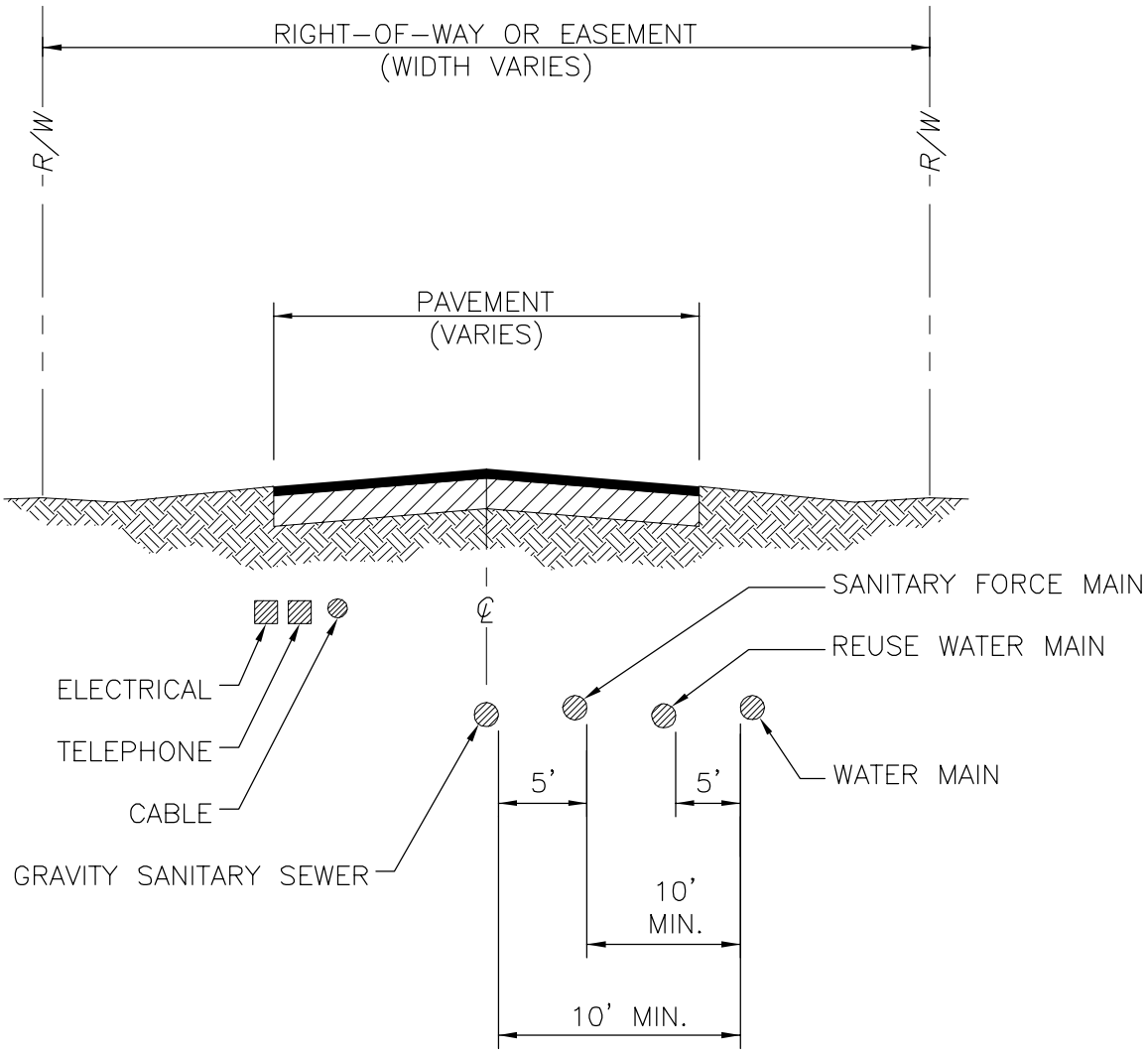

CITY OF HOLLYWOOD, FLORIDA — DIAMOND OF THE GOLD COAST — INCORPORATED 1925	ISSUED: 03/01/1994	DEPARTMENT OF PUBLIC UTILITIES STANDARD DETAIL	REVISED: 06/08/2014
	DRAWN: EAM	TYPICAL UTILITY ACCOMMODATION WITHIN RIGHT-OF-WAY OR EASEMENT	DRAWING NO. G-01
	APPROVED: XXX		

WATER MAIN SEPARATION IN ACCORDANCE WITH F.A.C. RULE 62-555.314

OTHER PIPE	HORIZONTAL SEPARATION	CROSSING (1), (4)	JOINT SPACING @ CROSSING (FULL JOINT CENTERED) (8)
STORM SEWER, STORM WATER FORCE MAIN, RECLAIMED WATER (2)	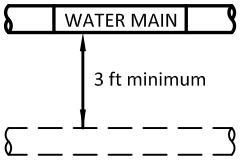	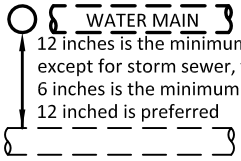	Alternate 3 ft minimum 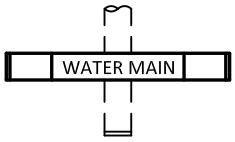
GRAVITY SANITARY SEWER, (3) SANITARY SEWER FORCE MAIN, RECLAIMED WATER	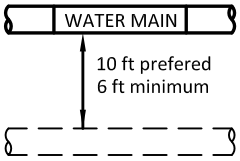	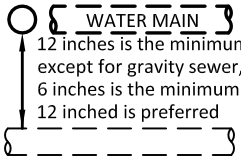	Alternate 6 ft minimum 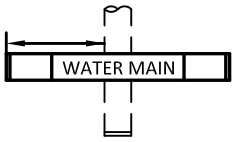
ON-SITE SEWAGE TREATMENT & DISPOSAL SYSTEM	10 ft minimum	———	———

1. WATER MAIN SHOULD CROSS ABOVE OTHER PIPE, WHEN WATER MAIN MUST BE BELOW OTHER PIPE, THE MINIMUM SEPARATION IS 12 INCHES.
2. RECLAIMED WATER REGULATED UNDER PART III OF CHAPTER 62-610, F.A.C.
3. 3 FT. FOR GRAVITY SANITARY SEWER WHERE THE BOTTOM OF THE WATER MAIN IS LAID AT LEAST 6 INCHES ABOVE THE TOP OF THE GRAVITY SANITARY SEWER.
4. 18" VERTICAL MINIMUM SEPARATION REQUIRED BY CITY OF HOLLYWOOD, UNLESS OTHERWISE APPROVED.
5. A MINIMUM 6 FOOT HORIZONTAL SEPARATION SHALL BE MAINTAINED BETWEEN ANY TYPE OF SEWER AND WATER MAIN IN PARALLEL INSTALLATIONS WHENEVER POSSIBLE.
6. IN CASES WHERE IT IS NOT POSSIBLE TO MAINTAIN A 10 FOOT HORIZONTAL SEPARATION, THE WATER MAIN MUST BE LAID IN A SEPARATE TRENCH OR ON AN UNDISTURBED EARTH SHELF LOCATED ON ONE SIDE OF THE SEWER OR FORCE MAIN AT SUCH AN ELEVATION THAT THE BOTTOM OF THE WATER MAIN IS AT LEAST 18 INCHES ABOVE THE TOP OF THE SEWER.
7. WHERE IT IS NOT POSSIBLE TO MAINTAIN A VERTICAL DISTANCE OF 18 INCHES IN A PARALLEL INSTALLATIONS, THE WATER MAIN SHALL BE CONSTRUCTED OF DIP AND THE SANITARY SEWER OR FORCE MAIN SHALL BE CONSTRUCTED OF DIP WITH A MINIMUM VERTICAL DISTANCE OF 6 INCHES. THE WATER MAIN SHOULD ALWAYS BE ABOVE THE SEWER. JOINTS ON THE WATER MAIN SHALL BE LOCATED AS FAR APART AS POSSIBLE FROM JOINTS ON THE SEWER OR FORCE MAIN (STAGGERED JOINTS).
8. ALL JOINTS ON THE WATER MAIN WITHIN 20 FEET OF THE CROSSING MUST BE MECHANICALY RESTRAINED.

CITY OF HOLLYWOOD, FLORIDA — DIAMOND OF THE GOLD COAST — INCORPORATED 1925	ISSUED: 03/01/1994	DEPARTMENT OF PUBLIC UTILITIES STANDARD DETAIL	REVISED: 11/06/2017
	DRAWN: EAM	SEPARATION REQUIREMENTS OF F.D.E.P.	DRAWING NO. G-01.1
	APPROVED: XXX		

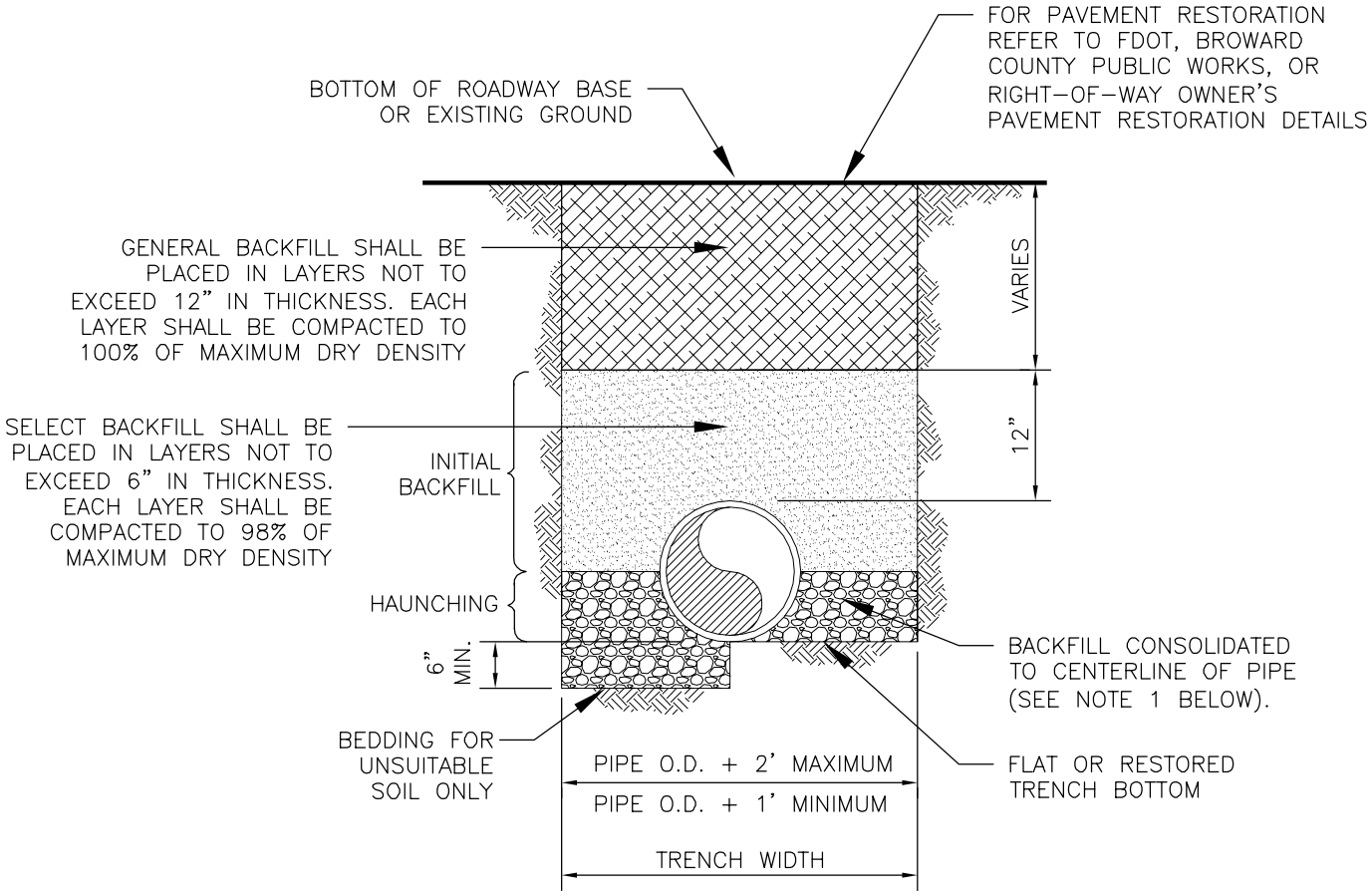

NOTES:

1. WHEN PIPE INSTALLATION IS ABOVE THE GROUND WATER TABLE ELEVATION, OR WHENEVER BEDDING COPPER PIPE UNDER ANY CONDITION, BEDDING MATERIAL SHALL BE CLEAN SANDY SOIL IF AVAILABLE WITHIN THE LIMITS OF CONSTRUCTION. IMPORTED BEDDING SHALL BE WELL GRADED, WASHED CRUSHED STONE (OR DRAINFIELD LIMEROCK). CRUSHED STONE SHALL CONSIST OF HARD, DURABLE, SUB-ANGULAR PARTICLES OF PROPER SIZE AND GRADATION, AND SHALL BE FREE FROM ORGANIC MATERIAL, WOOD, TRASH, SAND, LOAM, CLAY, EXCESS FINES, AND OTHER DELETERIOUS MATERIALS.
2. ALL BEDDING MATERIAL SHALL BE COMPACTED TO 95% OF MAXIMUM DENSITY BEFORE ANY PIPE IS LAID. FOR ADDITIONAL MATERIAL SPECIFICATIONS REFER TO SPECIFICATION SECTION 02222, "EXCAVATION AND BACKFILL FOR UTILITIES".
3. DENSITY TESTING SHALL BE IN ACCORDANCE WITH AASHTO T-180 AND ASTM D-3017.
4. BACKFILL TO COMPLY WITH FDOT DESIGN STANDARDS 125-8.

CITY OF HOLLYWOOD, FLORIDA — DIAMOND OF THE GOLD COAST — INCORPORATED 1925	ISSUED: 03/01/1994	DEPARTMENT OF PUBLIC UTILITIES STANDARD DETAIL	REVISED: 06/08/2014
	DRAWN: EAM	PIPE LAYING CONDITION TYPICAL SECTION (D.I.P.)	DRAWING NO. G-02
	APPROVED: XXX		

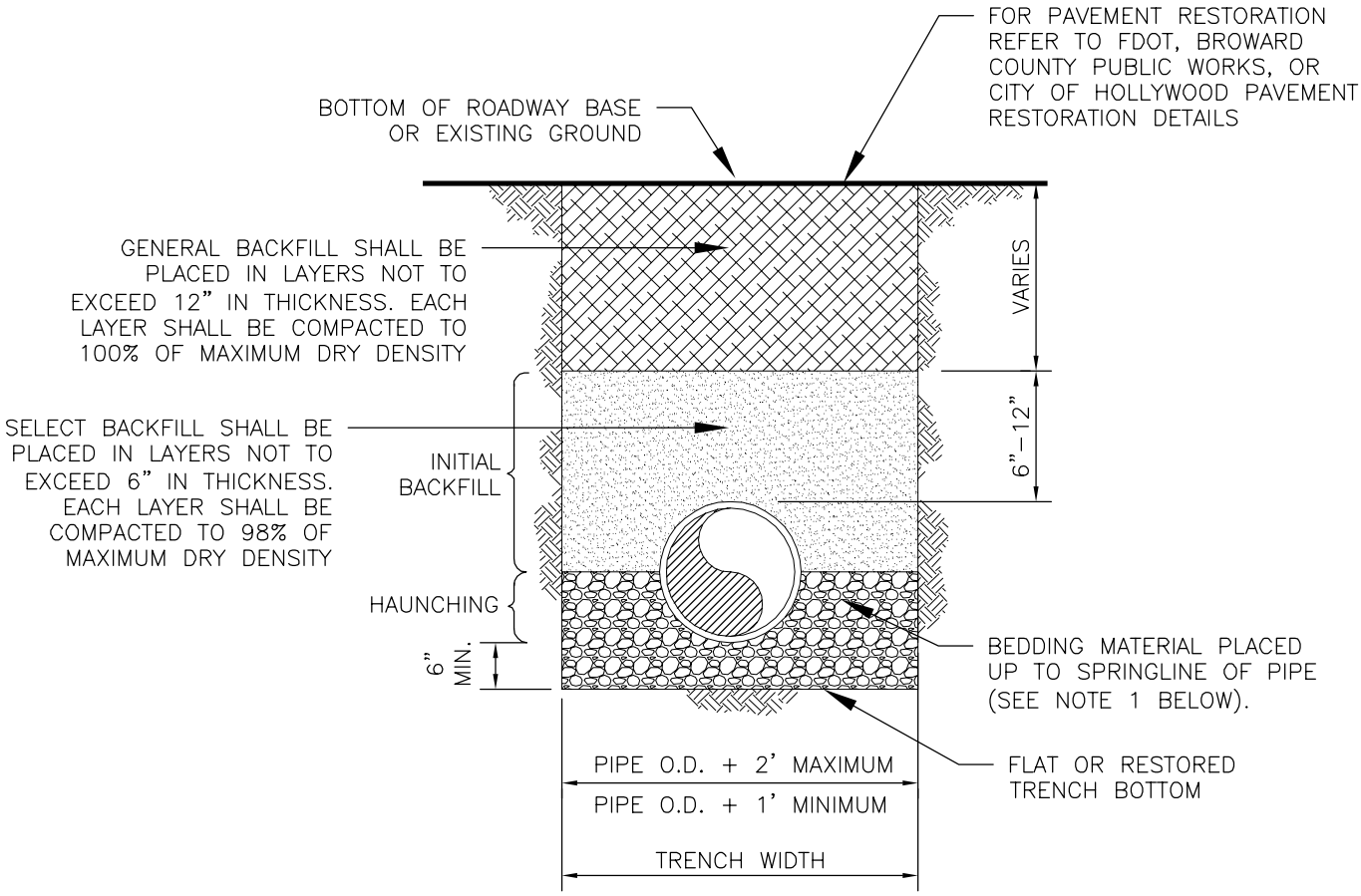

NOTES:

1. WHEN PIPE INSTALLATION IS ABOVE THE GROUND WATER TABLE ELEVATION, OR WHENEVER BEDDING COPPER PIPE UNDER ANY CONDITION, BEDDING MATERIAL SHALL BE CLEAN SANDY SOIL IF AVAILABLE WITHIN THE LIMITS OF CONSTRUCTION. IMPORTED BEDDING SHALL BE WELL GRADED, WASHED CRUSHED STONE (OR DRAINFIELD LIMEROCK). CRUSHED STONE SHALL CONSIST OF HARD, DURABLE, SUB–ANGULAR PARTICLES OF PROPER SIZE AND GRADATION, AND SHALL BE FREE FROM ORGANIC MATERIAL, WOOD, TRASH, SAND, LOAM, CLAY, EXCESS FINES, AND OTHER DELETERIOUS MATERIALS.
2. ALL BEDDING MATERIAL SHALL BE COMPACTED TO 95% OF MAXIMUM DENSITY BEFORE ANY PIPE IS LAID. FOR ADDITIONAL MATERIAL SPECIFICATIONS REFER TO SPECIFICATION SECTION 02222, "EXCAVATION AND BACKFILL FOR UTILITIES".
3. DENSITY TESTING SHALL BE IN ACCORDANCE WITH AASHTO T–180 AND ASTM D–3017.
4. BACKFILL TO COMPLY WITH FDOT DESIGN STANDARD 125–8.

CITY OF HOLLYWOOD, FLORIDA – DIAMOND OF THE GOLD COAST – INCORPORATED 1925	ISSUED: 03/01/1994	DEPARTMENT OF PUBLIC UTILITIES STANDARD DETAIL	REVISED: 06/08/2014
	DRAWN: EAM	PIPE LAYING CONDITION TYPICAL SECTION (P.V.C.)	DRAWING NO. G-03
	APPROVED: XXX		

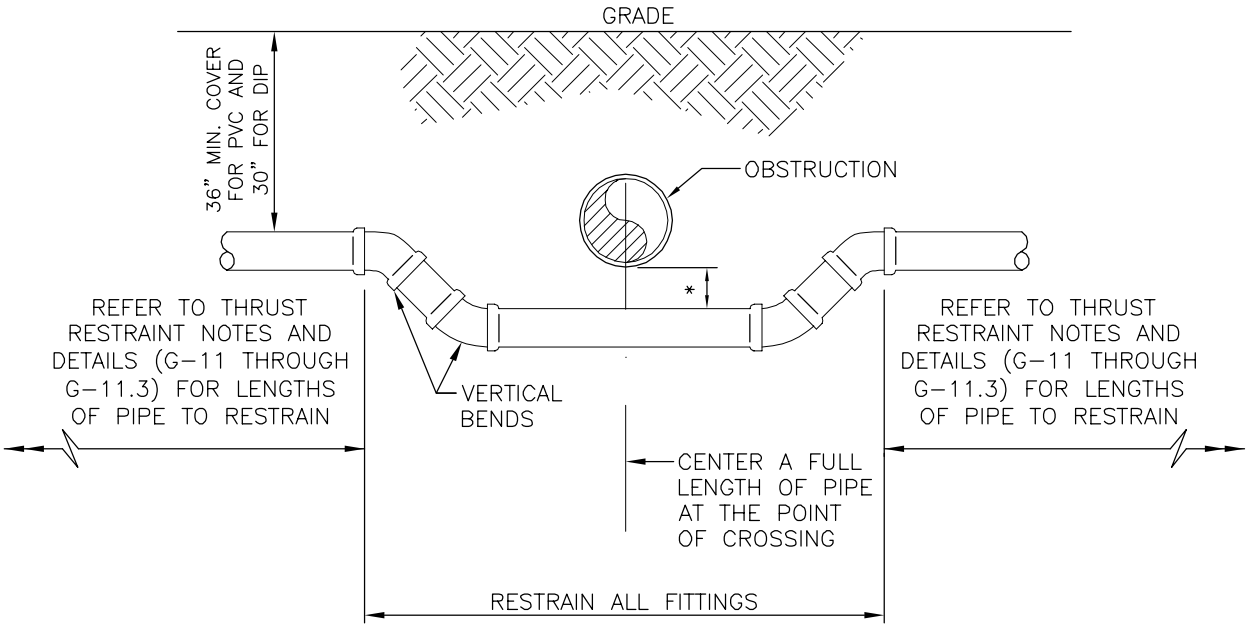

UTILITY CROSSING USING FITTINGS

* REFER TO STANDARD DETAIL G-01.1, "SEPARATION REQUIREMENTS", FOR FDEP AND HEALTH DEPARTMENT SEPARATION REQUIREMENTS.

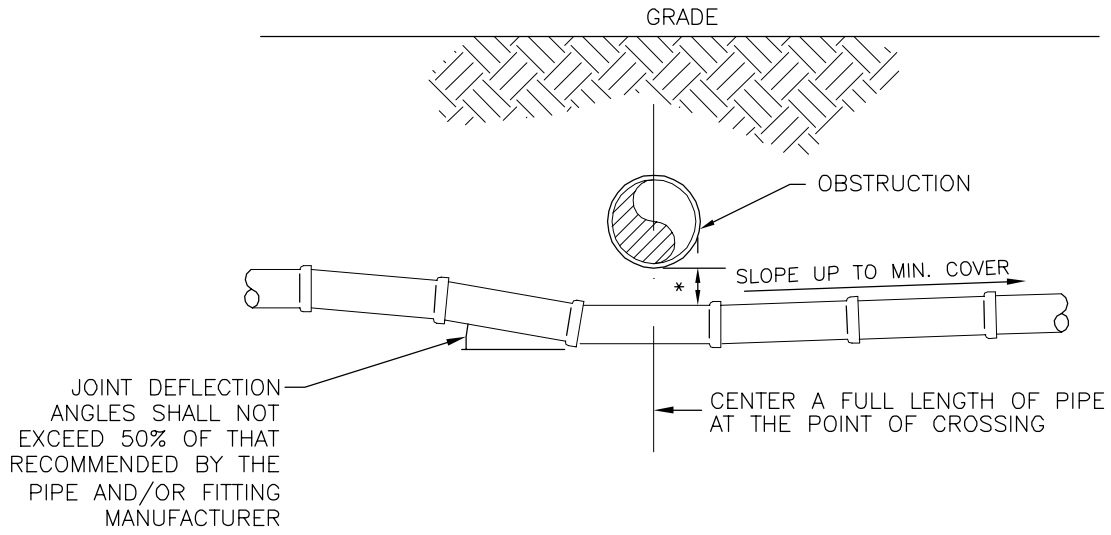

UTILITY CROSSING USING JOINT DEFLECTIONS

* REFER TO STANDARD DETAIL G-01.1, "SEPARATION REQUIREMENTS", FOR FDEP AND HEALTH DEPARTMENT SEPARATION REQUIREMENTS.

CITY OF HOLLYWOOD, FLORIDA — DIAMOND OF THE GOLD COAST — INCORPORATED 1925	ISSUED: 03/01/1994	DEPARTMENT OF PUBLIC UTILITIES STANDARD DETAIL	REVISED: 06/08/2014
	DRAWN: EAM	UTILITY CROSSING DETAIL	DRAWING NO. G-04
	APPROVED: XXX		

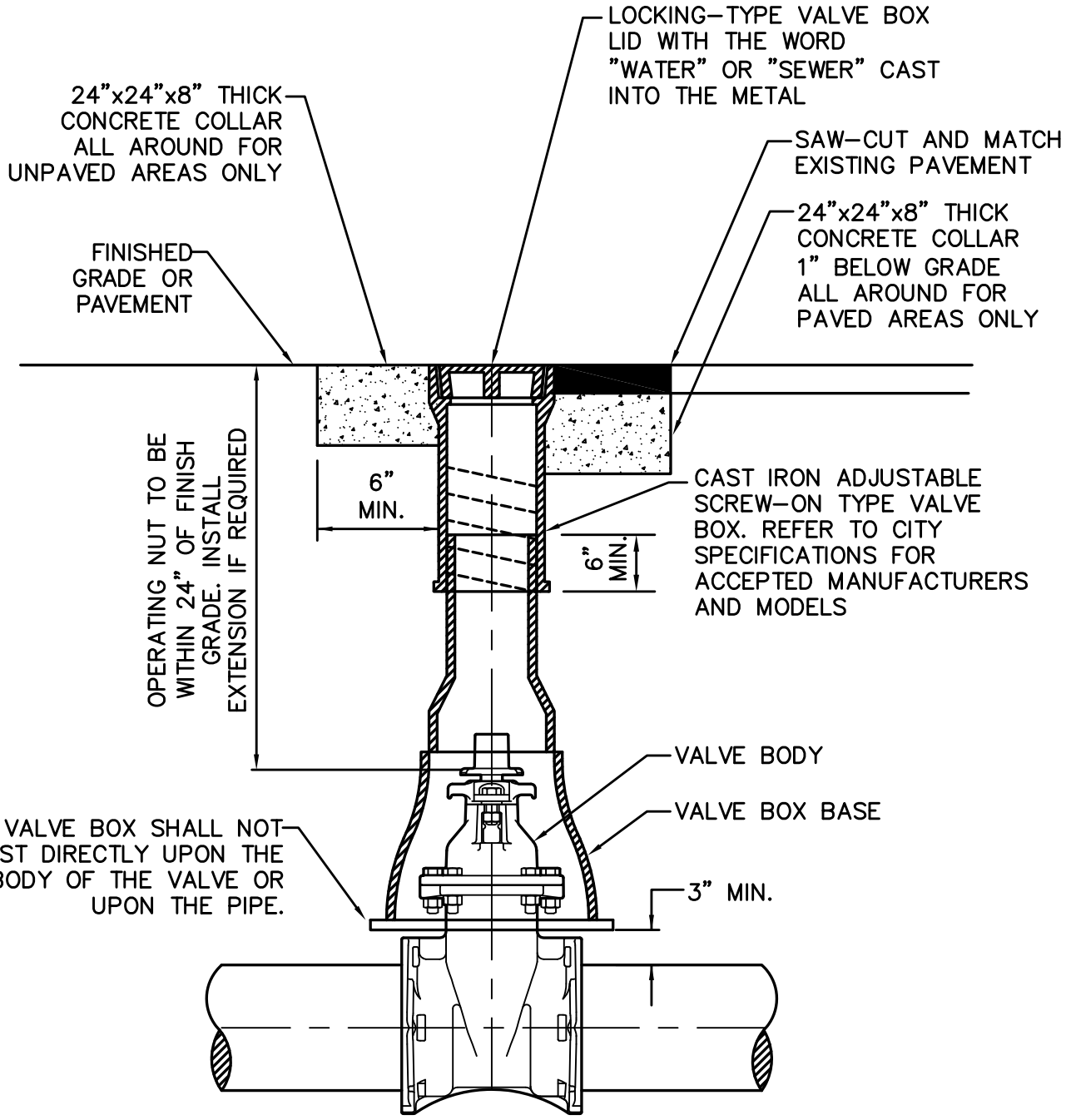

CITY OF HOLLYWOOD, FLORIDA — DIAMOND OF THE GOLD COAST — INCORPORATED 1925	ISSUED: 03/01/1994	DEPARTMENT OF PUBLIC UTILITIES STANDARD DETAIL	REVISED: 06/08/2014
	DRAWN: EAM	TYPICAL VALVE BOX SETTING	DRAWING NO. G-05
	APPROVED: XXX		

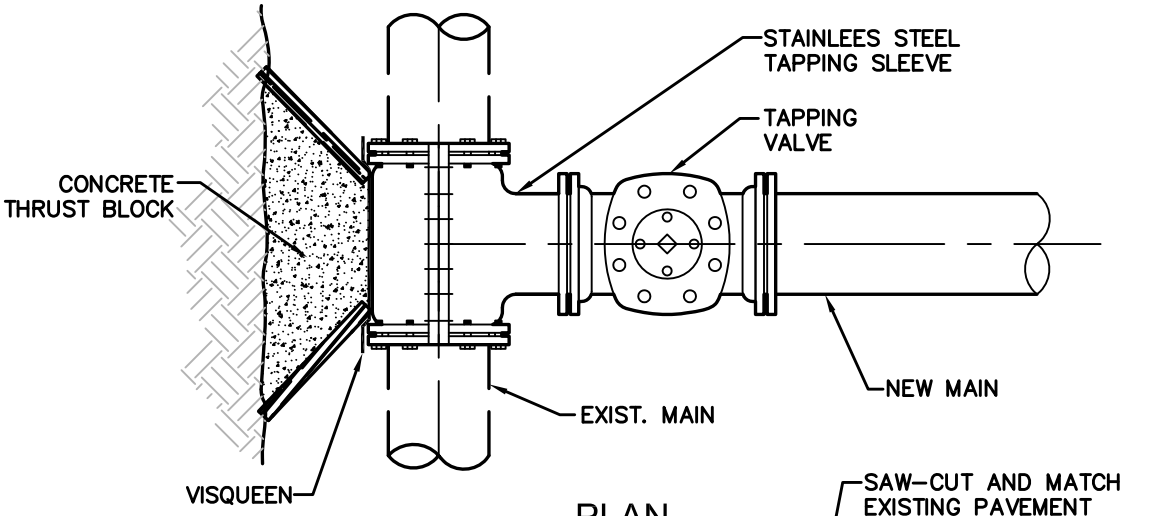

PLAN

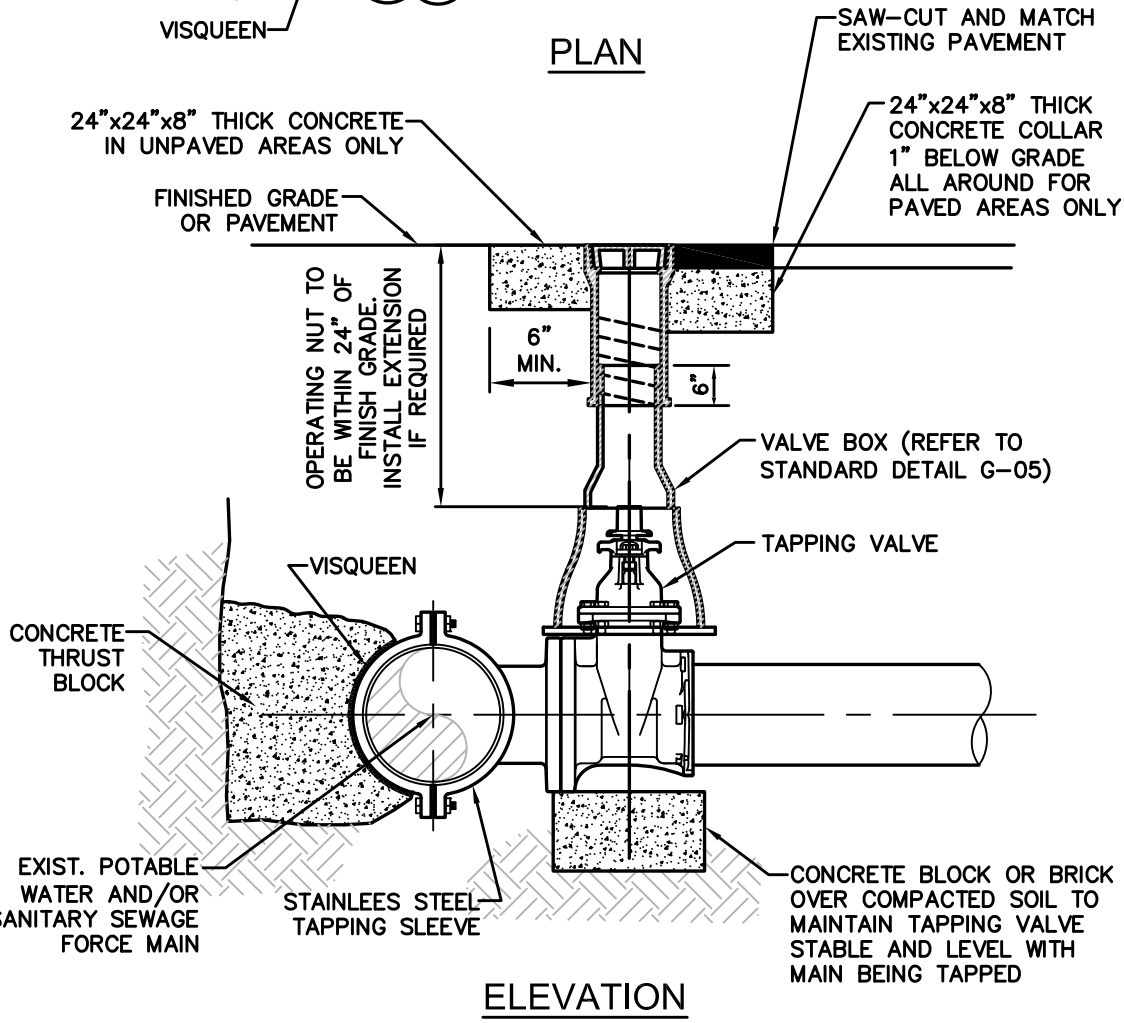

ELEVATION

NOTES:

1. NOTIFY THE CITY OF HOLLYWOOD 48 HOURS IN ADVANCE OF PROPOSED TAP.
2. TAPPING MUST BE DONE IN THE PRESENCE OF AN AUTHORIZED CITY REPRESENTATIVE.
3. TEMPORARY THRUST BLOCKS TO BE INSTALLED AND REMAIN IN PLACE DURING TAPPING OPERATIONS.
4. FOR SEWAGE FORCE MAINS, REFER TO DETAIL OF PRIVATE FORCE MAIN TIE-IN AT PROPERTY LINE.
5. FOR WATER MAINS, A GATE VALVE OF SAME DIAMETER SHALL BE INSTALLED ON THE DOWNSTREAM SIDE OF THE TAPPING VALVE.

CITY OF HOLLYWOOD, FLORIDA — DIAMOND OF THE GOLD COAST — INCORPORATED 1925	ISSUED: 03/01/1994	DEPARTMENT OF PUBLIC UTILITIES STANDARD DETAIL	REVISED: 06/08/2014
	DRAWN: EAM	TYPICAL TAPPING SLEEVE AND VALVE SETTING	DRAWING NO. G-06
	APPROVED: XXX		

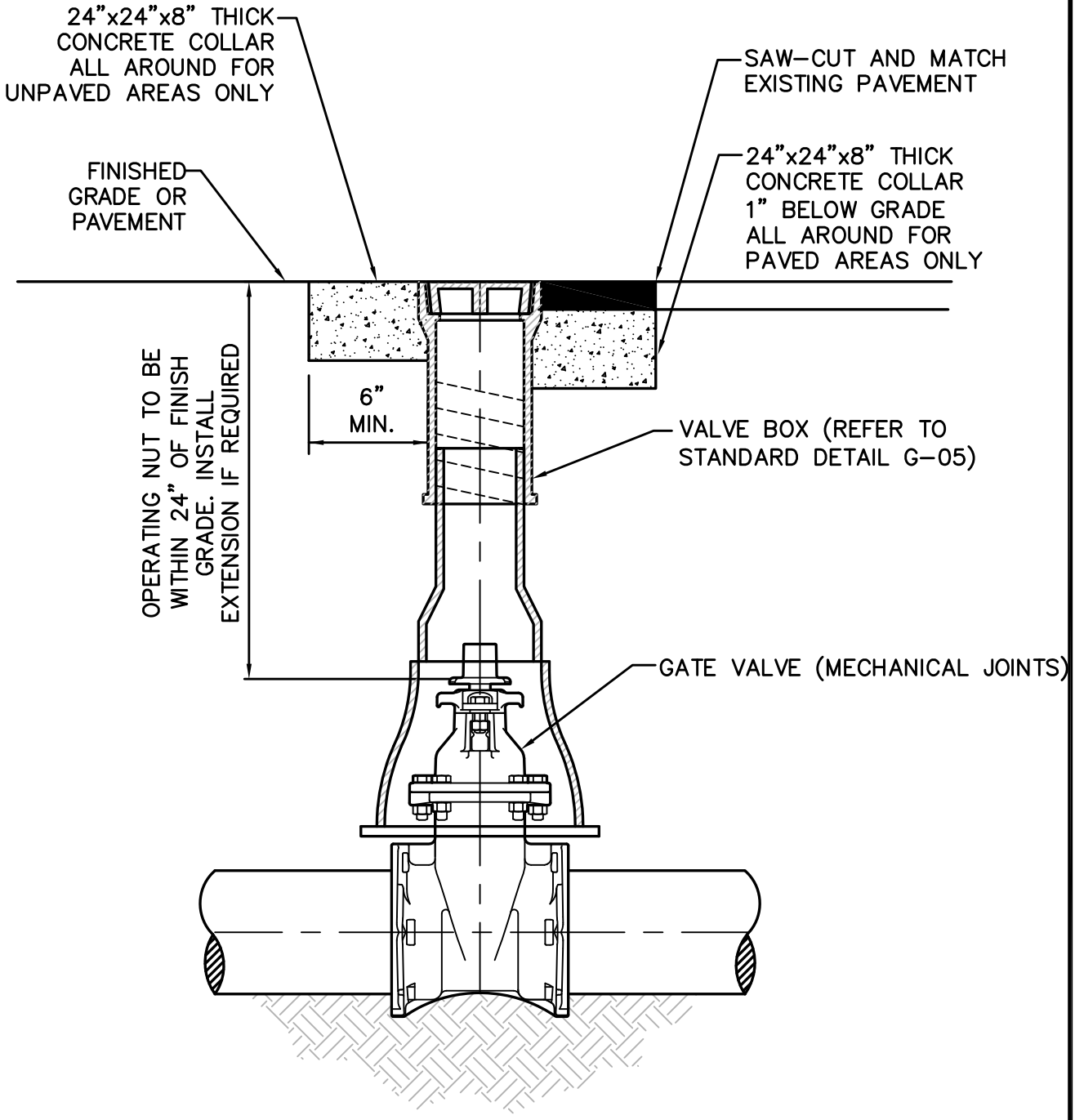

CITY OF HOLLYWOOD, FLORIDA — DIAMOND OF THE GOLD COAST — INCORPORATED 1925	ISSUED: 03/01/1994	DEPARTMENT OF PUBLIC UTILITIES STANDARD DETAIL	REVISED: 06/08/2014
	DRAWN: EAM	TYPICAL GATE VALVE AND VALVE BOX SETTING	DRAWING NO. G-07
	APPROVED: XXX		

RESILIENT SEATED GATE VALVE SPECIFICATIONS:

4" THROUGH 12" SIZE
(WATER AND FORCE MAIN)

1. GATE VALVES SHALL BE RESILIENT SEATED, MANUFACTURED TO MEET OR EXCEED THE REQUIREMENTS OF AWWA C509 (LATEST REVISION) AND IN ACCORDANCE WITH THE FOLLOWING SPECIFICATIONS:

   1.1. VALVES SHALL HAVE AN UNOBSTRUCTED WATERWAY EQUAL TO OR GREATER THAN THE FULL NOMINAL DIAMETER OF THE VALVE.

   1.2. THE VALVES ARE TO BE NON-RISING STEM WITH THE STEM MADE OF CAST, FORGED OR ROLLED BRONZE SHOWN IN AWWA C509, TWO STEM SEALS SHALL BE PROVIDED AND SHALL BE OF THE O-RING TYPE, ONE ABOVE AND ONE BELOW THE THRUST COLLAR WITH LUBRICANT BETWEEN O-RING.

   1.3. THE STEM NUT, ALSO MADE OF BRONZE, MAY BE INDEPENDENT OF THE GATE OR CAST INTEGRALLY WITH THE GATE. IF THE STEM NUT IS CAST INTEGRALLY, THE THREADS SHALL BE STRAIGHT AND TRUE WITH THE AXIS OF THE STEM TO AVOID BINDING DURING THE OPENING OR CLOSING CYCLE.

   1.4. THE SEALING MECHANISM SHALL CONSISTS OF A CAST IRON GATE HAVING A VULCANIZED SYNTHETIC RUBBER COATING OR A RUBBER SEAT MECHANICALLY RETAINED ON THE GATE, THE RESILIENT SEALING MECHANISM SHALL PROVIDE ZERO LEAKAGE AT THE WATER WORKING PRESSURE WHEN INSTALLED WITH THE LINE FLOW IN EITHER DIRECTION.

   1.5. A 2-INCH SQUARE WRENCH NUT SHALL BE PROVIDED FOR OPERATING THE VALVE.

   1.6. ALL VALVES ARE TO BE SUPPLIED COMPLETE AND READY FOR INSTALLATION INCLUDING, BUT NOT LIMITED TO ALL NUTS, BOLTS RINGS AND RUBBERS.

   1.7. ALL VALVES ARE TO BE TESTED IN STRICT ACCORDANCE WITH AWWA C509 LATEST REVISION).

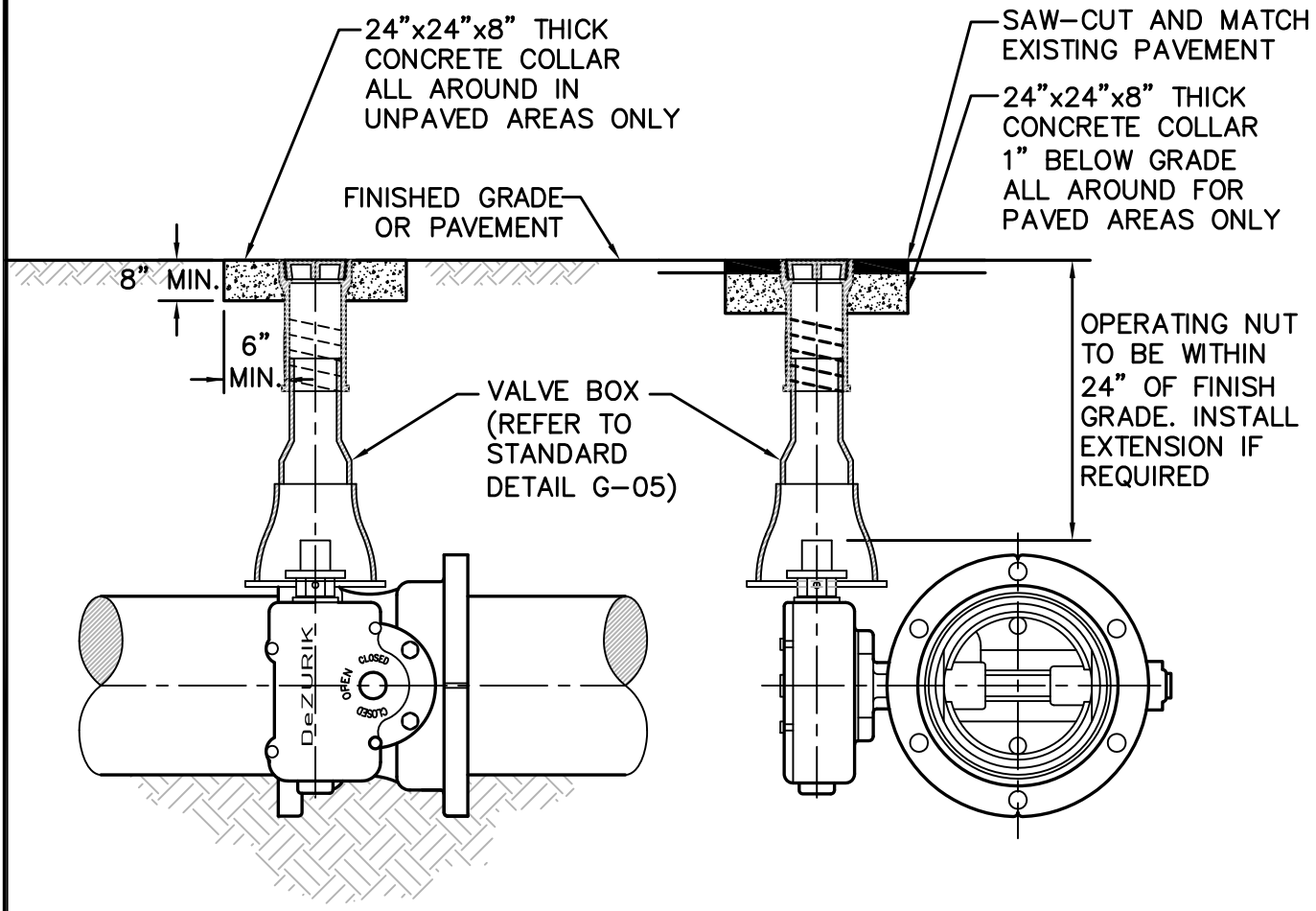

CITY OF HOLLYWOOD, FLORIDA — DIAMOND OF THE GOLD COAST — INCORPORATED 1925	ISSUED: 03/01/1994	DEPARTMENT OF PUBLIC UTILITIES STANDARD DETAIL	REVISED: 06/08/2014
	DRAWN: EAM	TYPICAL BUTTERFLY VALVE SETTING	DRAWING NO. G-08
	APPROVED: XXX		

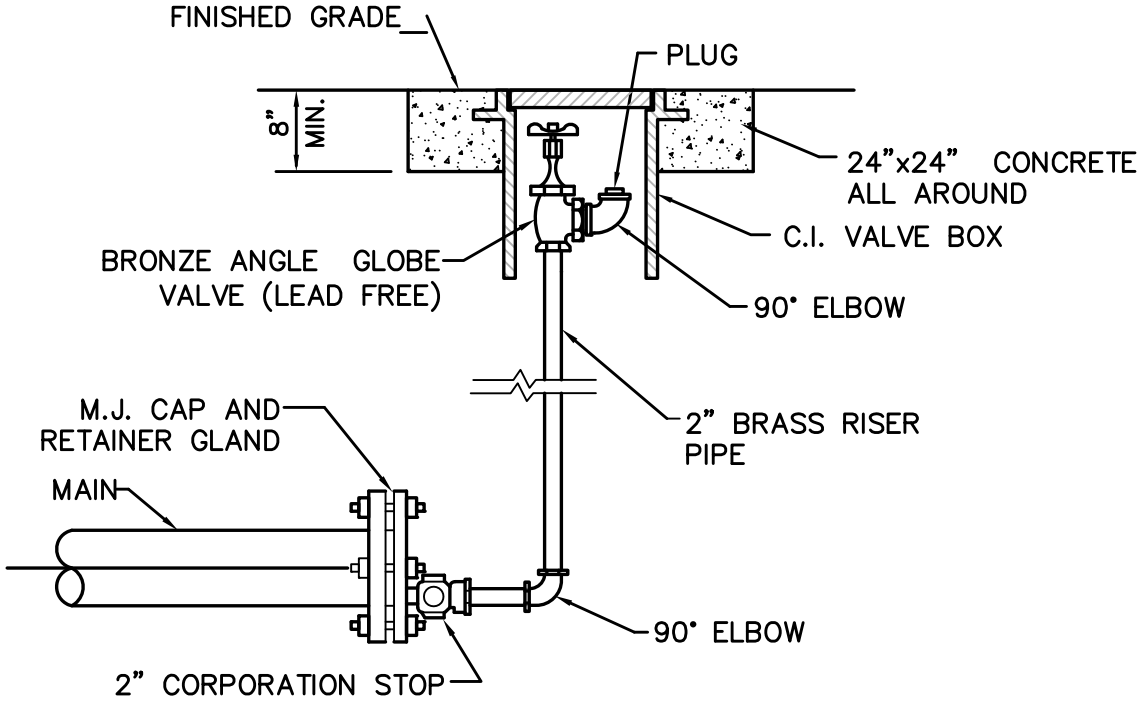

SECTION "A-A"

NOTES:

1. PIPE JOINT COMPOUND SHALL BE APPLIED TO MALE THREADS ONLY.
2. 2" TAP IN BOTTOM OF CAP ON MAIN.
3. PLYWOOD AND CONCRETE TO HAVE A HEIGHT EQUAL TO THE DIAMETER OF THE PIPE.
4. ALL FITTINGS TO BE MADE OF BRASS.

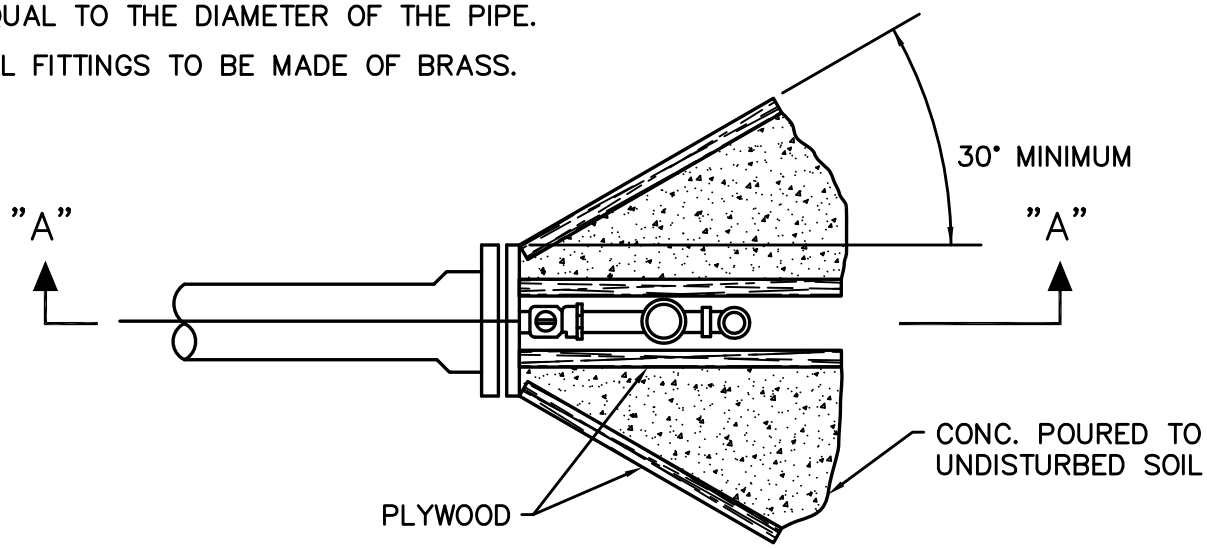

PLAN VIEW

CITY OF HOLLYWOOD, FLORIDA — DIAMOND OF THE GOLD COAST — INCORPORATED 1925	ISSUED: 03/01/1994	DEPARTMENT OF PUBLIC UTILITIES STANDARD DETAIL	REVISED: 11/06/2017
	DRAWN: EAM	TERMINAL BLOW-OFF DETAIL	DRAWING NO. G-09
	APPROVED: XXX		

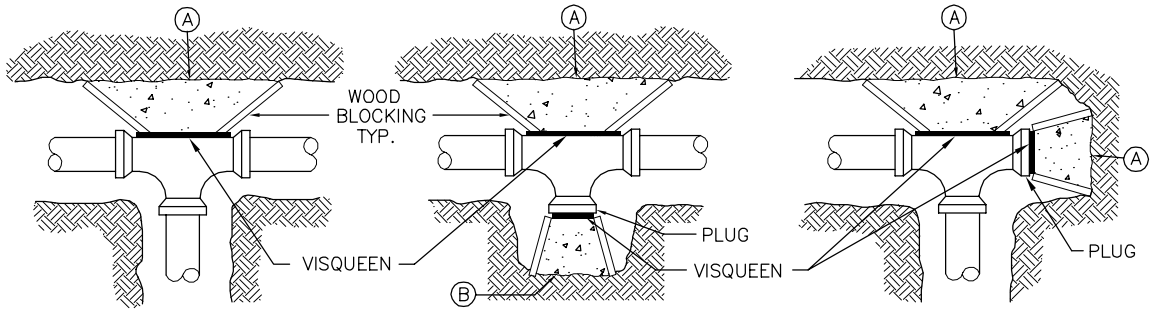

TEE | TEE WITH PLUG | TEE WITH PLUG

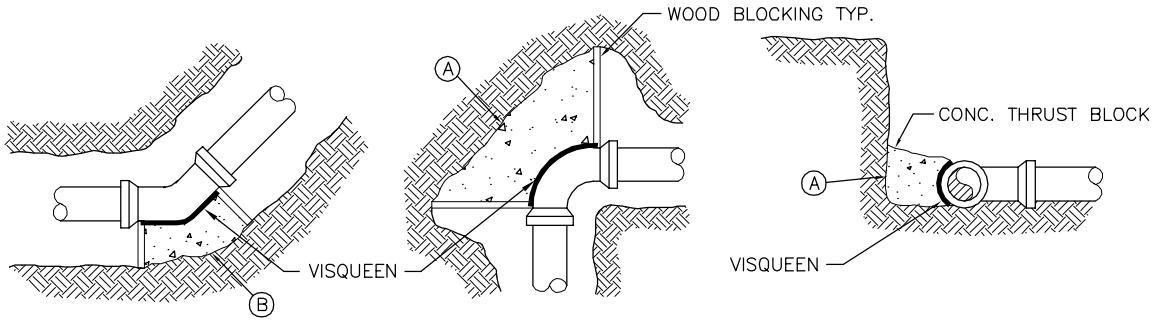

45° BEND | 90° BEND | TYPICAL SECTION

MINIMUM CONCRETE THRUST BLOCKING BEARING ON UNDISTURBED MATERIAL (SQ. FT.)				
MARK	PIPE SIZE			
	4" OR 6"	8"	10"	12"
A				
B				

NOTES:

1. THRUST BLOCKS ARE TO BE USED IN COMBINATION WITH, AND NOT IN LIEU OF, MECHANICAL JOINT RESTRAINTS AS REQUIRED BY THE CITY. REFER TO THRUST RESTRAINT DESIGN TABLE IN STANDARD DETAIL G-10.

2. THE AREAS IN THE TABLE ARE BASED ON _____ POUNDS PER SQUARE FOOT SOIL BEARING AGAINST THE UNDISTURBED TRENCH WALL AND ARE TO REPRESENT THE MINIMUM VERTICAL PROJECTED AREA AT THE THRUST BLOCK IN A PLANE PERPENDICULAR TO THE LINE BISECTING THE INCLUDING ANGLE OF THE FITTING.

3. POUR THRUST BLOCKS AGAINST UNDISTURBED MATERIAL. WHERE TRENCH WALL HAS BEEN DISTURBED, EVACUATE LOOSE MATERIAL AND EXTEND THRUST BLOCK TO UNDISTURBED MATERIAL.

4. ON BENDS AND TEES, EXTEND THRUST BLOCKS FULL LENGTH OF FITTING.

5. DO NOT COVER COUPLING OR JOINTS WITH CONCRETE.

6. CONCRETE TO BE 2500 P.S.I. MINIMUM 28 DAY STRENGTH.

7. TABLE TO BE COMPLETED BY DESIGN ENGINEER.

CITY OF HOLLYWOOD, FLORIDA – DIAMOND OF THE GOLD COAST – INCORPORATED 1925	ISSUED: 03/01/1994	DEPARTMENT OF PUBLIC UTILITIES STANDARD DETAIL	REVISED: 06/08/2014
	DRAWN: EAM	THRUST BLOCK DESIGN	DRAWING NO. G-10
	APPROVED: XXX		

THRUST RESTRAINT NOTES:

1. ALL JOINTS BETWEEN BENDS AT HORIZONTAL & VERTICAL OFFSETS SHALL BE RESTRAINED.

2. MECHANICAL THRUST RESTRAINTS FOR D.I.P. FITTINGS ON D.I.P. OR P.V.C. PIPE SHALL BE MEGALUG AS MANUFACTURED BY EBAA IRON, INC., OR APPROVED EQUAL.

3. DUCTILE IRON FITTINGS UP TO 20-INCHES IN DIAMETER SHALL BE RESTRAINED BY MECHANICAL MEANS, I.E., MEGALUGS OR APPROVED EQUAL.

4. DUCTILE IRON FITTINGS 24-INCH IN DIAMETER AND ABOVE SHALL BE RESTRAINED BY MECHANICAL MEANS, I.E., MEGALUGS OR APPROVED EQUAL, WITH THE ADDITION OF THRUST BLOCKS AND CONCRETE ANCHORS AT THE DISCRETION OF THE ENGINEER OF RECORD.

5. ANY THRUST BLOCKS AND ANCHORS ARE TO BE DESIGNED BY THE ENGINEER OF RECORD. SIGNED AND SEALED CALCULATIONS SHALL BE SUBMITTED TO THE CITY FOR APPROVAL PRIOR TO INSTALLATION.

6. THRUST BLOCKS CONSISTING OF POURED-IN-PLACE CONCRETE SHALL HAVE A MINIMUM COMPRESSIVE STRENGH OF 2,500 PSI AFTER 28 DAYS.

CITY OF HOLLYWOOD, FLORIDA — DIAMOND OF THE GOLD COAST — INCORPORATED 1925	ISSUED: 03/01/1994	DEPARTMENT OF PUBLIC UTILITIES STANDARD DETAIL	REVISED: 06/08/2014
	DRAWN: EAM	JOINT RESTRAINT DESIGN FOR PVC AND DIP THRUST RESTRAINT NOTES	DRAWING NO. G-11
	APPROVED: XXX		

HORIZONTAL BENDS			
PIPE DIA. (INCHES)	BEND (ANGLE)	RESTRAINED LENGTH (RL) (FT)	
		PVC	*DIP
24	11 1/4	.	.
	22 1/2	.	.
	45	.	.
	90	.	.
16	11 1/4	.	.
	22 1/2	.	.
	45	.	.
	90	.	.
12	11 1/4	.	.
	22 1/2	.	.
	45	.	.
	90	.	.
8	11 1/4	.	.
	22 1/2	.	.
	45	.	.
	90	.	.
6	11 1/4	.	.
	22 1/2	.	.
	45	.	.
	90	.	.
4	11 1/4	.	.
	22 1/2	.	.
	45	.	.
	90	.	.

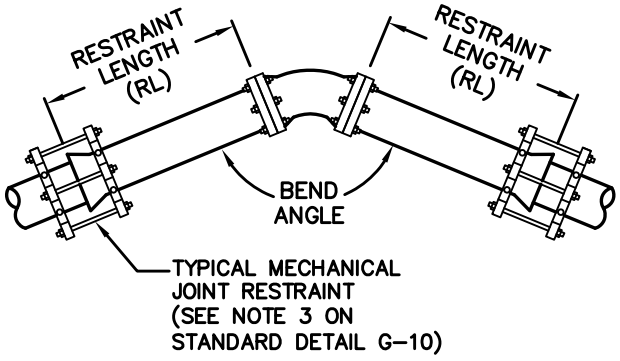

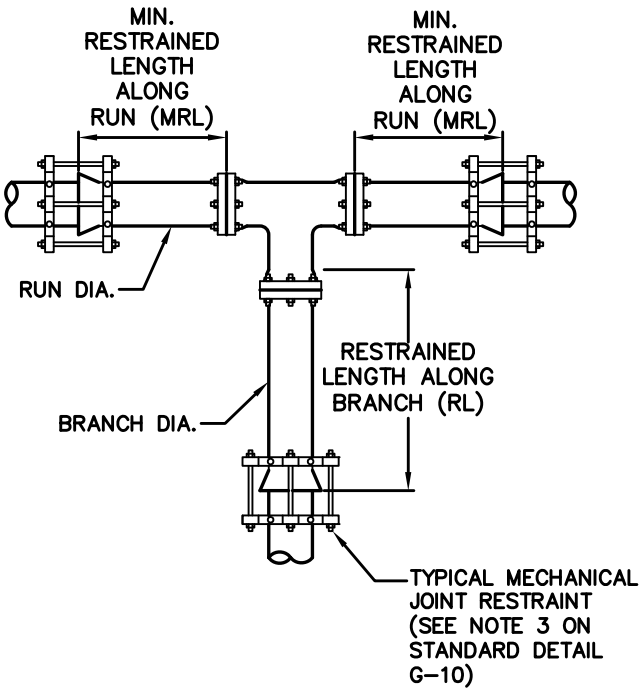

TEES AND TAPPING SLEEVES									
RUN DIA. (INCHES)	BRANCH DIA. (INCHES)	MINIMUM RESTRAINED LENGTH ALONG RUN (FT.)	MINIMUM RESTRAINED LENGTH ALONG BRANCH (FT.)		RUN DIA. (INCHES)	BRANCH DIA. (INCHES)	MINIMUM RESTRAINED LENGTH ALONG RUN (FT.)	MINIMUM RESTRAINED LENGTH ALONG BRANCH (FT.)	
			PVC	*DIP				PVC	*DIP
24"	24"	.	.	.	12"	12"	.	.	.
	16"	.	.	.		8"	.	.	.
	12"	.	.	.		6"	.	.	.
	8"	.	.	.		4"	.	.	.
	6"	.	.	.	8"	8"	.	.	.
	4"	.	.	.		6"	.	.	.
16"	16"	.	.	.		4"	.	.	.
	12"	.	.	.	6"	6"	.	.	.
	8"	.	.	.		4"	.	.	.
	6"	.	.	.	4"	4"	.	.	.
	4"	.	.	.	.	.	.	.	.

*ALL DIP JOINT–RESTRAINT CALCULATIONS ASSUME THE PIPE WILL BE WRAPPED IN POLYETHYLENE ENCASEMENT

CITY OF HOLLYWOOD, FLORIDA – DIAMOND OF THE GOLD COAST – INCORPORATED 1925	ISSUED: 03/01/1994	DEPARTMENT OF PUBLIC UTILITIES STANDARD DETAIL	REVISED: 06/08/2014
	DRAWN: EAM	JOINT RESTRAINT DESIGN FOR PVC AND DIP HORIZONTAL BENDS AND TEES	DRAWING NO. G-11.1
	APPROVED: XXX		

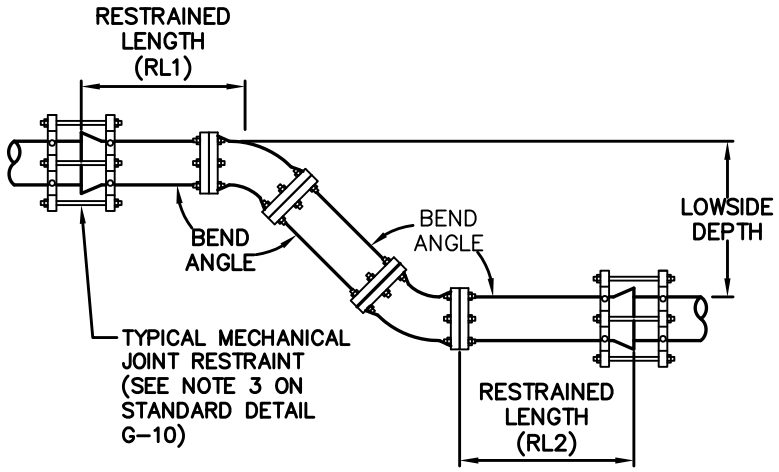

VERTICAL OFFSETS						
			PVC		*DIP	
PIPE DIA. (INCHES)	BEND (ANGLE)	LOWSIDE DEPTH (FT)	RESTRAINED LENGTHS		RESTRAINED LENGTHS	
			RL1 (FT.)	RL2 (FT.)	RL1 (FT.)	RL2 (FT.)
24	45	4	.	.	.	.
		5	.	.	.	.
		6	.	.	.	.
		7	.	.	.	.
16	45	4	.	.	.	.
		5	.	.	.	.
		6	.	.	.	.
		7	.	.	.	.
12	45	4	.	.	.	.
		5	.	.	.	.
		6	.	.	.	.
		7	.	.	.	.
8	45	4	.	.	.	.
		5	.	.	.	.
		6	.	.	.	.
		7	.	.	.	.
6	45	4	.	.	.	.
		5	.	.	.	.
		6	.	.	.	.
		7	.	.	.	.
4	45	4	.	.	.	.
		5	.	.	.	.
		6	.	.	.	.
		7	.	.	.	.

*ALL DIP JOINT–RESTRAINT CALCULATIONS ASSUME THE PIPE WILL BE WRAPPED IN POLYETHYLENE ENCASEMENT

CITY OF HOLLYWOOD, FLORIDA – DIAMOND OF THE GOLD COAST – INCORPORATED 1925	ISSUED: 03/01/1994	DEPARTMENT OF PUBLIC UTILITIES STANDARD DETAIL	REVISED: 06/08/2014
	DRAWN: EAM	JOINT RESTRAINT DESIGN FOR PVC AND DIP VERTICAL OFFSETS	DRAWING NO. G-11.2
	APPROVED: XXX		

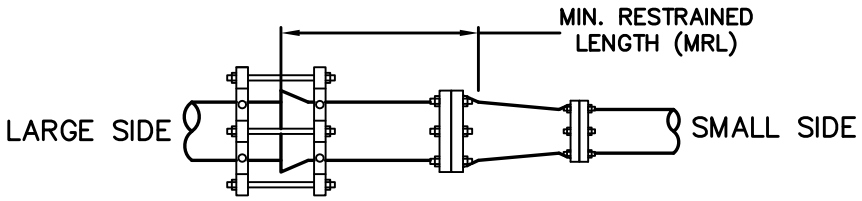

REDUCERS							
LARGE SIDE	SMALL SIDE	MINIMUM LENGTH TO RESTRAIN ON LARGE SIDE (FT)		LARGE SIDE	SMALL SIDE	MINIMUM LENGTH TO RESTRAIN ON LARGE SIDE (FT)	
		PVC	*DIP			PVC	*DIP
24"	16"	.	.	12"	8"	.	.
	12"	.	.		6"	.	.
	8"	.	.		4"	.	.
	6"	.	.	8"	6"	.	.
	4"	.	.		4"	.	.
16"	12"	.	.		2"	.	.
	8"	.	.	6"	4"	.	.
	6"	.	.		2"	.	.
	4"	.	.	4"	2"	.	.

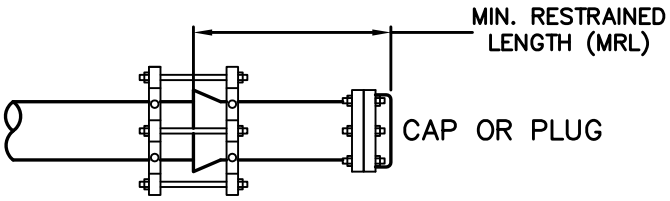

DEAD ENDS		
PIPE DIA. (INCHES)	MIN. RESTRAINED LENGTH (FT)	
	PVC	*DIP
24"	.	.
16"	.	.
12"	.	.
8"	.	.
6"	.	.
4"	.	.

*ALL DIP JOINT–RESTRAINT CALCULATIONS ASSUME THE PIPE WILL BE WRAPPED IN POLYETHYLENE ENCASEMENT

CITY OF HOLLYWOOD, FLORIDA — DIAMOND OF THE GOLD COAST — INCORPORATED 1925	ISSUED: 03/01/1994	DEPARTMENT OF PUBLIC UTILITIES STANDARD DETAIL	REVISED: 06/08/2014
	DRAWN: EAM	JOINT RESTRAINT DESIGN FOR PVC AND DIP REDUCERS AND DEAD ENDS	DRAWING NO. G-11.3
	APPROVED: XXX		

FLEXIBLE PAVEMENT RESTORATION NOTES:

1. THE ABOVE DETAILS APPLY ONLY TO ASPHALT PAVEMENT RESTORATION OVER UTILITY TRENCHES CUT WITHIN CITY OF HOLLYWOOD RIGHTS-OF-WAY. FOR PAVEMENT RESTORATION WITHIN BROWARD COUNTY OR FDOT RIGHTS-OF-WAY REFER TO THE CORRESPONDING DETAILS FOR THOSE AGENCIES.

2. LIMEROCK BASE MATERIAL SHALL HAVE A MINIMUM L.B.R. OF 100 AND A MINIMUM CARBONATE CONTENT OF 70%. REPLACED BASE MATERIAL OVER TRENCH SHALL BE A MINIMUM OF 12" THICK".

3. LIMEROCK BASE MATERIAL SHALL BE PLACED IN 12" MAXIMUM (LOOSE MEASUREMENT) THICKNESS LAYERS WITH EACH LAYER THOROUGHLY ROLLED OR TAMPED AND COMPACTED TO 100% OF MAXIMUM DENSITY, PER AASHTO T-180, PRIOR TO THE PLACEMENT OF THE SUCCEEDING LAYERS.

4. STABILIZED SUBGRADE MATERIAL SHALL BE GRANULAR AND SHALL HAVE A MINIMUM L.B.R. OF 40.

5. BACKFILL SHALL BE PLACED AND COMPACTED IN ACCORDANCE WITH THE PIPE LAYING CONDITION TYPICAL SECTIONS IN DETAILS G-02 AND G-03, AND THE SPECIFICATIONS, BUT TESTING WILL BEGIN 12" ABOVE THE INSTALLED FACILITY.

6. ALL EDGES AND JOINTS OF EXISTING ASPHALT PAVEMENT SHALL BE SAW CUT TO STRAIGHT LINES, PARALLEL TO OR PERPENDICULAR TO THE ROADWAY, PRIOR TO THE RESURFACING.

7. RESURFACING MATERIAL SHALL BE FDOT SUPERPAVE, AND SHALL BE APPLIED A MINIMUM OF TWO INCH IN THICKNESS.

8. MILL AND BUTT JOINT TO EXISTING PAVEMENT.

9. IF THE TRENCH IS FILLED TEMPORARILY, IT SHALL BE COVERED WITH A 2" ASPHALTIC CONCRETE PATCH TO KEEP THE FILL MATERIAL FROM RAVELING UNTIL REPLACED WITH A PERMANENT PATCH.

10. REFER TO SPECIFICATIONS FOR DETAILED PROCEDURES.

11. WHERE THE UTILITY TRENCH CROSSES EXISTING ASPHALT DRIVEWAYS, THE LIMEROCK BASE THICKNESS MAY BE A MINIMUM OF 6 INCHES THICK. REGARDLESS OF THE EXTENT OF IMPACT, THE ENTIRE DRIVEWAY SURFACE BETWEEN THE EDGE OF THE ROADWAY PAVEMENT AND PROPERTY LINE OR FRONT OF SIDEWALK SHALL BE OVERLAID USING 2-INCH THICK MINIMUM ASPHALTIC CONCRETE SURFACE COURSE WHERE INDICATED ON THE PLANS OR AS DIRECTED BY THE CITY/ENGINEER.

CITY OF HOLLYWOOD, FLORIDA — DIAMOND OF THE GOLD COAST — INCORPORATED 1925	ISSUED: 03/01/1994	DEPARTMENT OF PUBLIC UTILITIES STANDARD DETAIL	REVISED: 11/06/2017
	DRAWN: EAM	FLEXIBLE PAVEMENT RESTORATION NOTES	DRAWING NO. G-12
	APPROVED: XXX		

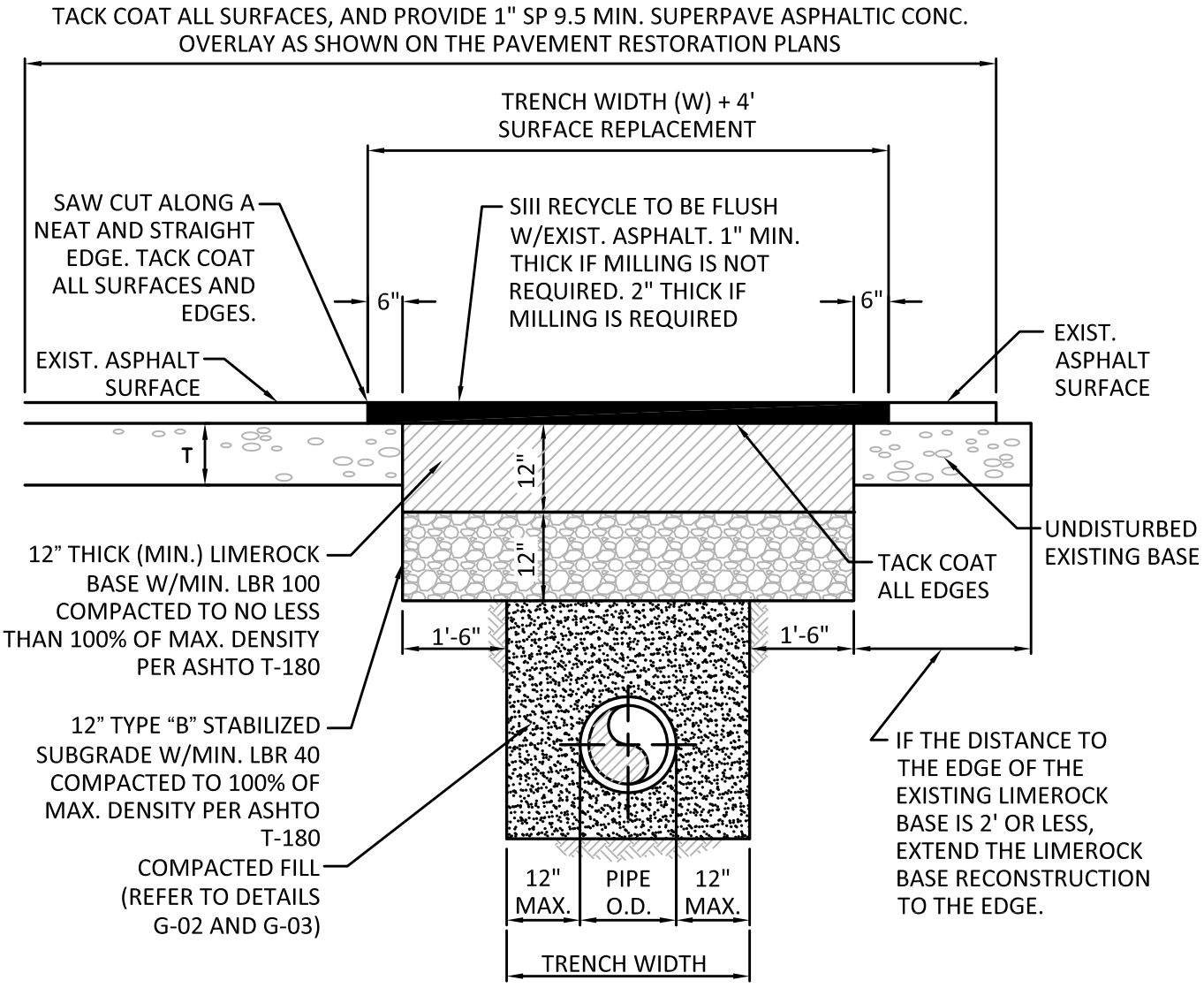

CITY OF HOLLYWOOD, FLORIDA — DIAMOND OF THE GOLD COAST — INCORPORATED 1925	ISSUED: 03/01/1994	DEPARTMENT OF PUBLIC UTILITIES STANDARD DETAIL	REVISED: 11/06/2017
	DRAWN: EAM	FLEXIBLE PAVEMENT RESTORATION FOR TRENCHES CUT PERPENDICULAR AND PARALLEL TO THE ROADWAY	DRAWING NO. G-12.1
	APPROVED: XXX		

NOTE:

IF CRACKS APPEAR IN ASPHALT ADJACENT TO CUT, EDGES MUST BE SAW CUT TO A STRAIGHT LINE 6" BEYOND THE FURTHEST CRACK

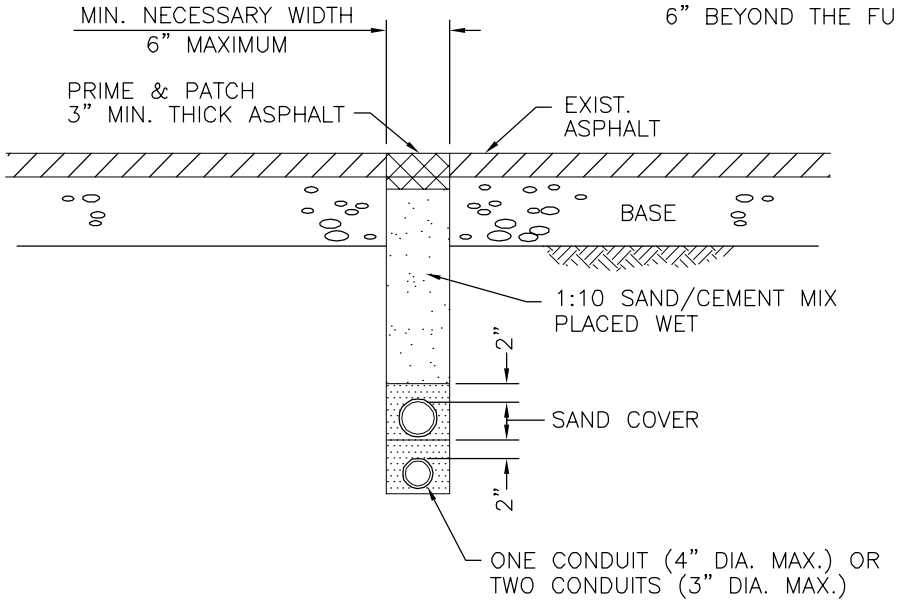

DETAIL "A"

MINIMUM UTILITY CROSSING OF ROADWAY

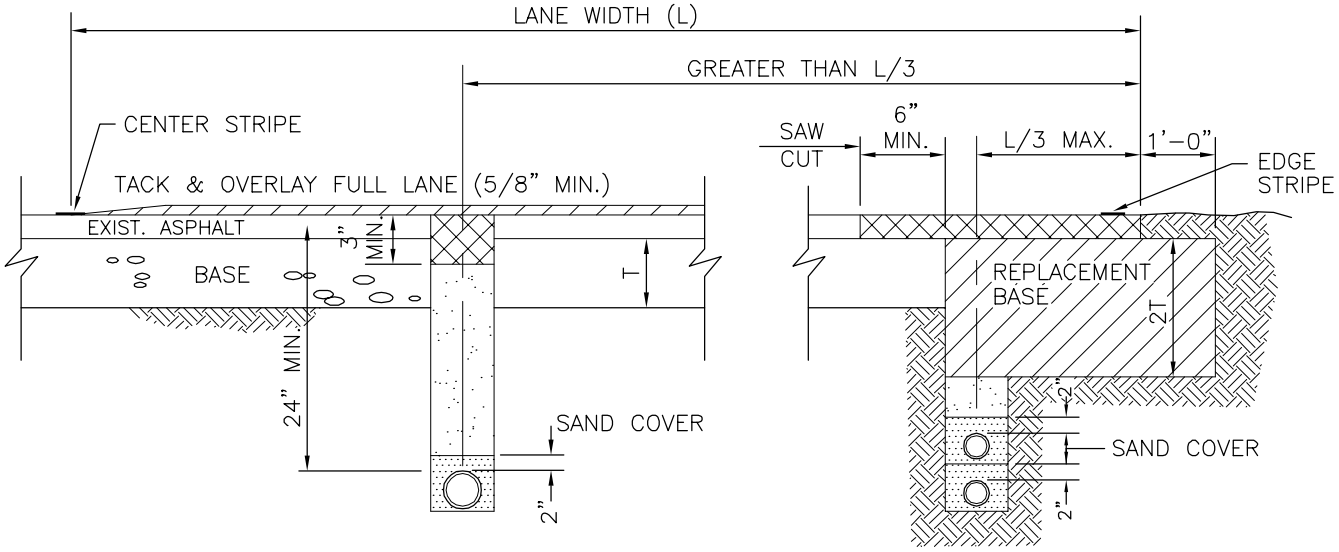

DETAIL "B" DETAIL "C"

MINIMUM PARALLEL UTILITY INSTALLATION

NOTE:

DETAILS NOT SHOWN SHALL BE AS PER DETAIL "A"

CITY OF HOLLYWOOD, FLORIDA — DIAMOND OF THE GOLD COAST — INCORPORATED 1925	ISSUED: 03/01/1994	DEPARTMENT OF PUBLIC UTILITIES STANDARD DETAIL	REVISED: 06/08/2014
	DRAWN: EAM	FLEXIBLE PAVEMENT RESTORATION FOR CONDUIT	DRAWING NO. G-12.2
	APPROVED: XXX		

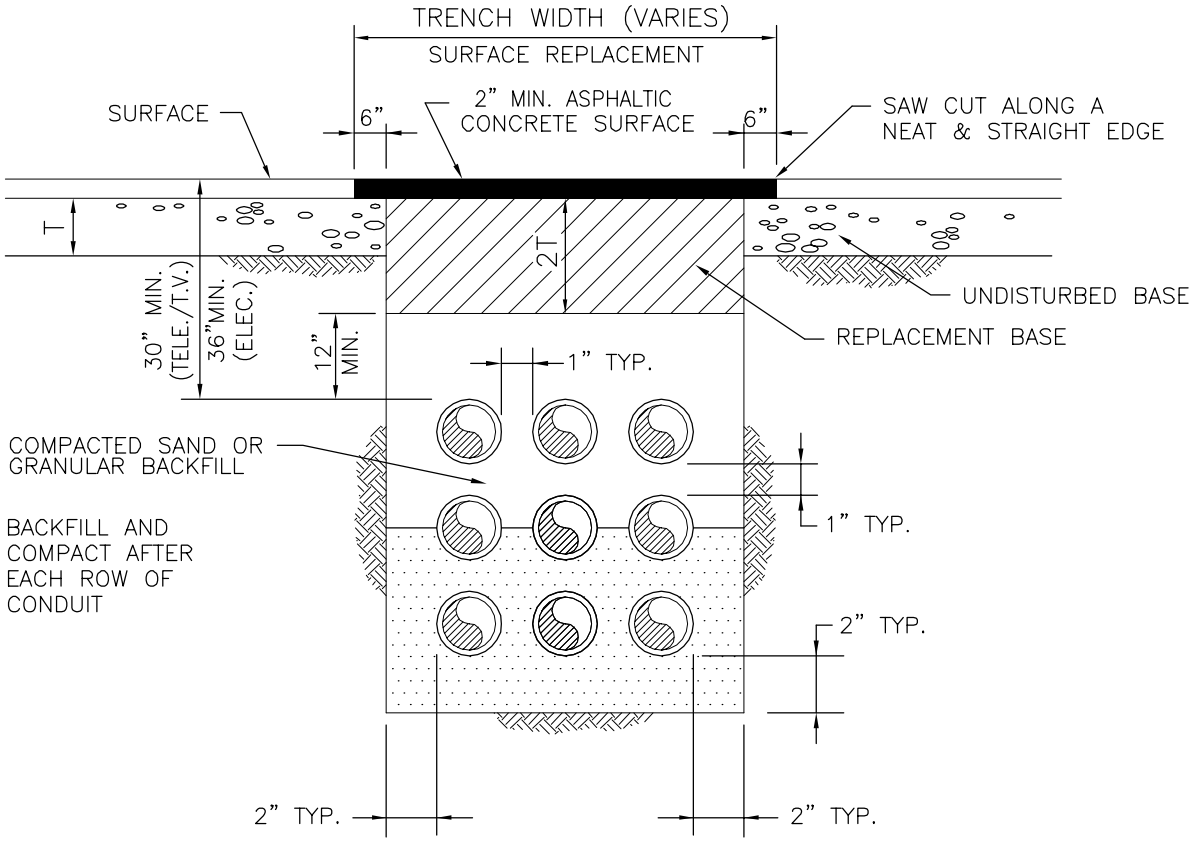

DETAIL "A"

(CROSSING ROADWAY)

NOTES:

1. REPLACED BASE MATERIAL OVER TRENCH SHALL BE TWICE THE THICKNESS OF THE ORIGINAL BASE, MINIMUM 12", MAXIMUM 18".
2. BASE MATERIAL SHALL BE PLACED IN 6" MAXIMUM (LOOSE MEASUREMENT) LAYERS AND EACH LAYER THOROUGHLY ROLLED OR TAMPED TO 98% OF MAXIMUM DENSITY, PER AASHTO T-180.
3. ASPHALT CONCRETE PAVEMENT JOINTS SHALL BE MECHANICALLY SAWED.
4. SURFACE TREATED PAVEMENT JOINTS SHALL BE LAPPED AND FEATHERED.
5. SURFACE MATERIAL SHALL BE CONSISTENT WITH THE EXISTING SURFACE.
6. BASE MATERIAL SHALL HAVE A MINIMUM LBR OF 100 AND A MINIMUM CARBONATE CONTENT OF 70%.
7. IF THE TRENCH IS FILLED TEMPORARILY, IT SHALL BE COVERED WITH A 2" ASPHALTIC CONCRETE PATCH TO KEEP THE FILL MATERIAL FROM RAVELING UNTIL REPLACED WITH A PERMANENT PATCH.
8. BACKFILL SHALL BE IN ACCORDANCE WITH DETAIL OF PIPE LAYING CONDITION TYPICAL SECTION, EXCEPT AS SHOWN ABOVE.

CITY OF HOLLYWOOD, FLORIDA — DIAMOND OF THE GOLD COAST — INCORPORATED 1925	ISSUED: 03/01/1994	DEPARTMENT OF PUBLIC UTILITIES STANDARD DETAIL	REVISED: 06/08/2014
	DRAWN: EAM	FLEXIBLE PAVEMENT RESTORATION FOR DUCTBANKS	DRAWING NO. G-12.3
	APPROVED: XXX		

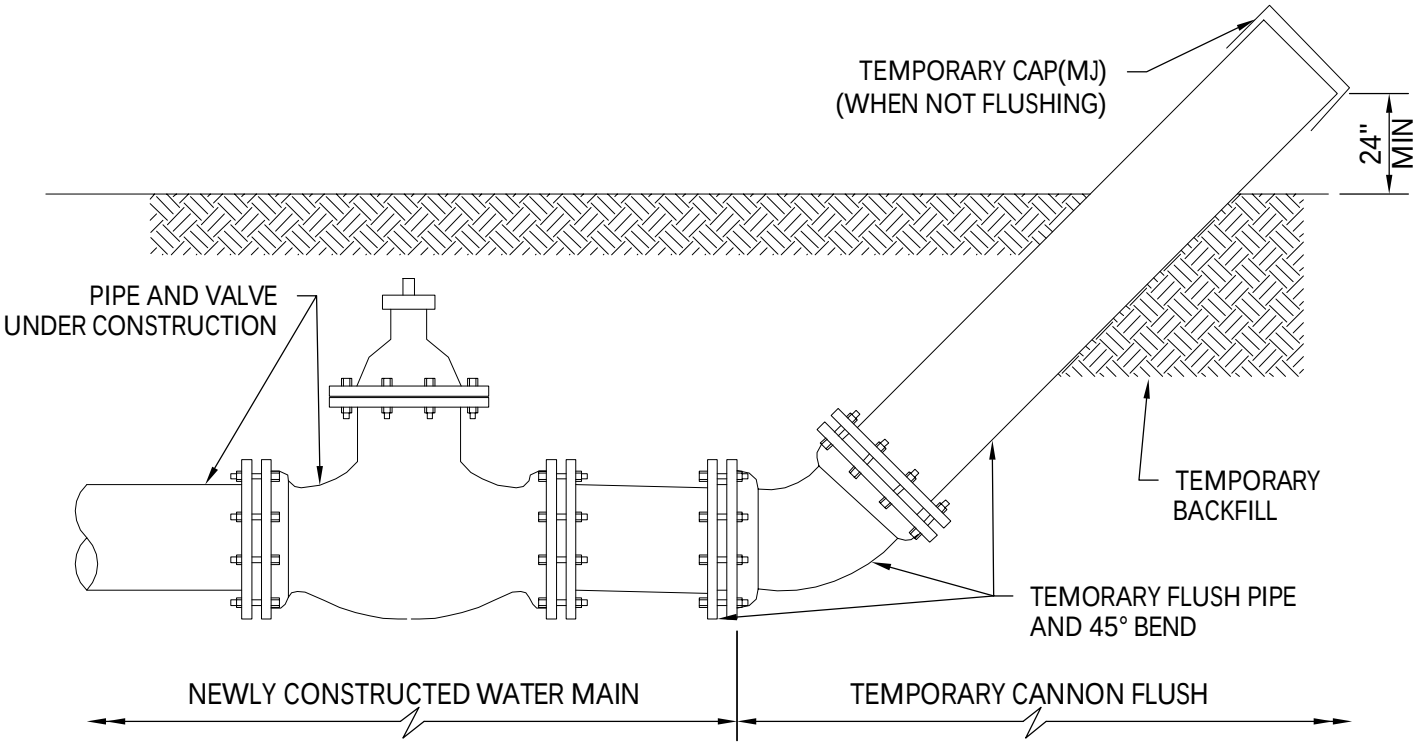

GENERAL NOTES:

1. FLUSHING LOCATIONS ARE TO BE PROPOSED BY CONTRACTOR AND APPROVED BY CITY.
2. UPON COMPLETION OF THE PIPE INSTALLATION FOR ANY SECTION, THE MAIN SHALL BE CANNON FLUSHED TO REMOVE DIRT AND ANY OTHER FOREIGN MATTER.
3. INSTALL A TEMPORARY 45° BEND AND ASSOCIATED TEMPORARY PIPING AS SHOWN TO DIRECT THE FLUSHING WATER AWAY FROM THE IMMEDIATE WORK AREA AND EXERCISE DUE CARE SO AS TO ENSURE THAT THE WATER USED IN FLUSHING DOES NOT CAUSE A NUISANCE OR INFLICT PROPERTY DAMAGE.
4. BENDS AND PIPING SHALL BE THE SAME SIZE OR LARGER AS THE LINE BEING FLUSHED.
5. PRIOR TO THE ACTUAL LINE FLUSHING OPERATION THE CONTRACTOR SHALL PROPERLY NOTIFY CITY INSPECTOR OF SUCH INTENDED WATER USE.
6. NO EXISTING VALVE SHALL BE OPERATED, EXCEPT BY AUTHORIZED CITY PERSONNEL.
7. FLUSHING SHALL NOT BE ACCOMPLISHED WITHOUT THE ACTUAL PRESENCE OF THE CITY INSPECTOR.
8. AFTER THE LINE UNDER CONSTRUCTION HAS BEEN SUCCESSFULLY FLUSHED, THE CONTRACTOR SHALL REMOVE THE TEMPORARY PIPING ARRANGEMENT AND PROCEED WITH THE REMAINING CONSTRUCTION AS SPECIFIED.
9. ALL PIPING SHALL BE MECHANICALLY RESTRAINED IN ACCORDANCE WITH CITY STANDARDS.
10. IF REQUIRED BY CITY, WATER MAINS SHALL BE CLEANED BY PIGGING.
11. CONTRACTOR WILL INSTALL A PRESSURE GAUGE AT OR NEAR THE FILL AND FLUSH LOCATION AND MAINTAIN A MINIMUM PRESSURE OF 40 PSI AT ALL TIMES. THE FILL VALVE WILL BE OPENED AND CLOSED SLOWLY TO AVOID RAPID PRESSURE CHANGES IN THE WATER SYSTEM.
12. CONTRACTOR IS CAUTIONED THAT GOVERNING AGENCIES OR UTILITIES MAY HAVE REGULATIONS LIMITING OR PROHIBITING DISCHARGE INTO SEWERS, SURFACE WATERS, CANALS, DITCHES AND OTHER CONVEYANCES/RETENTION AREA. ALL COMPLIANCE WITH GOVERNING AGENCIES REQUIREMENTS (INCLUDING PERMITTING, IF REQUIRED) IS THE SOLE RESPONSIBILITY OF THE CONTRACTOR.
13. CANNON FLUSHING TO PROCEED AFTER HEALTH DEPARTMENT CLEARANCE IS RECEIVED.

CITY OF HOLLYWOOD, FLORIDA — DIAMOND OF THE GOLD COAST — INCORPORATED 1925	ISSUED: 03/01/1994	DEPARTMENT OF PUBLIC UTILITIES STANDARD DETAIL	REVISED: 06/08/2014
	DRAWN: EAM	CANNON FLUSHING	DRAWING NO. G-13
	APPROVED: XXX		

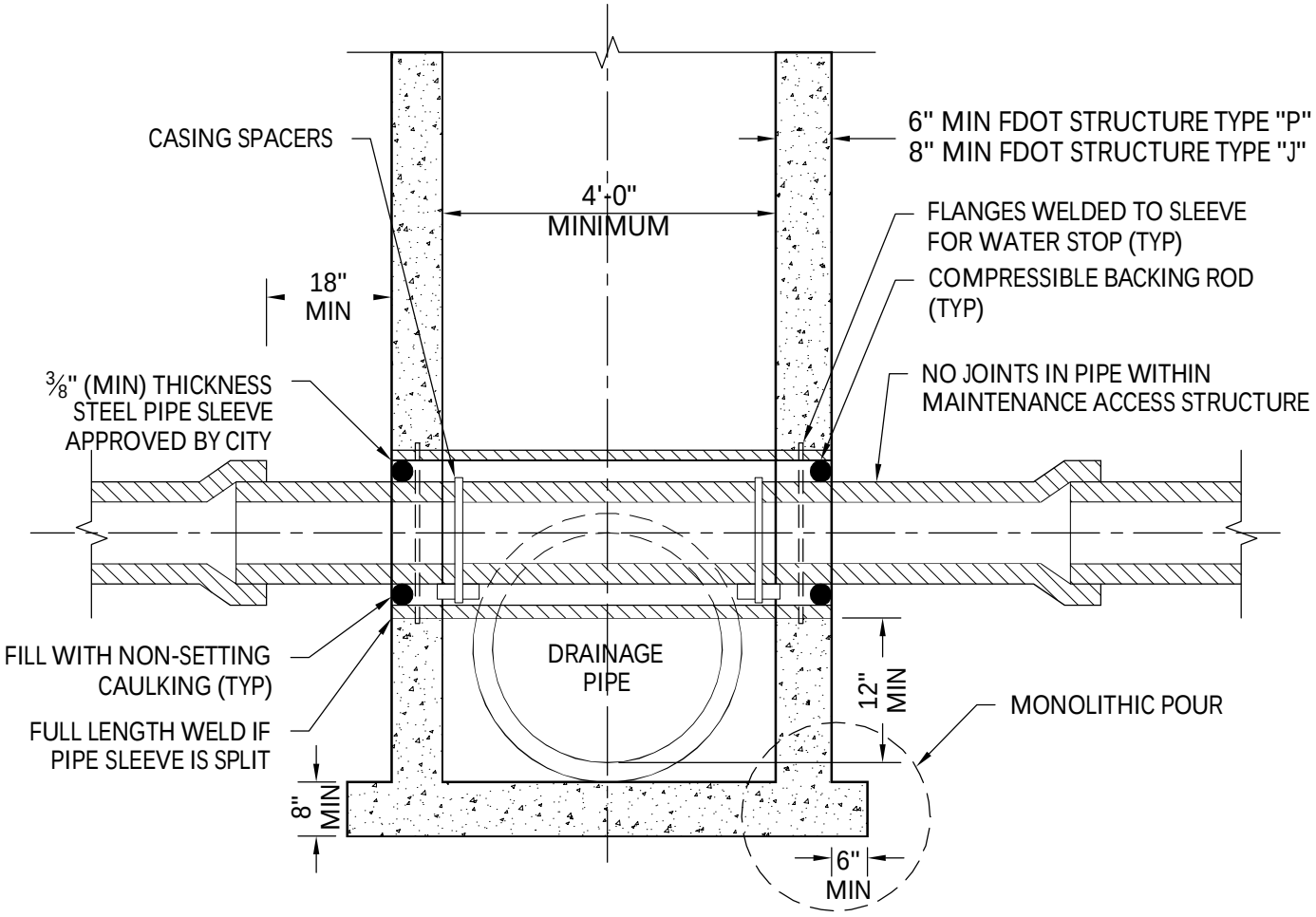

NOTES:

1. ALL CONFLICT MAINTENANCE ACCESS STRUCTURE SHALL CONFORM TO THE DETAILS SHOWN ON THIS DRAWING, AND TO THE REQUIREMENTS OF ASTM C-478 AND THE CITY OF HOLLYWOOD DEPARTMENT OF PUBLIC UTILITIES STANDARDS AND SPECIFICATIONS, LATEST EDITION.

2. POTABLE WATER PIPE SHALL NOT PASS THROUGH OR CONTACT STORM DRAINAGE MAINTENANCE ACCESS STRUCTURE WITHOUT WRITTEN PERMISSION OF CITY.

3. POTABLE WATER PIPE SHALL NOT PASS THROUGH OR CONTACT SANITARY SEWER MAINTENANCE ACCESS STRUCTURE.

4. MINIMUM TWO (2) FOOT CLEARANCE REQUIRED BETWEEN OUTSIDE OF SLEEVE AND PARALLEL WALL.

5. CONFLICT STRUCTURE TO COMPLY WITH REQUIREMENTS OF CHAPTER 62-555.314 (FAC).

CITY OF HOLLYWOOD, FLORIDA — DIAMOND OF THE GOLD COAST — INCORPORATED 1925	ISSUED: 03/01/1994	DEPARTMENT OF PUBLIC UTILITIES STANDARD DETAIL	REVISED: 06/08/2014
	DRAWN: EAM	CONFLICT MAINTENANCE ACCESS STRUCTURE	DRAWING NO. G-14
	APPROVED: XXX		

SEWER NOTES:

1. THE MINIMUM DEPTH OF COVER OVER D.I.P. SANITARY SEWER GRAVITY OR FORCE MAINS IS 30". THE MINIMUM DEPTH OF COVER OVER PVC SANITARY SEWER OR FORCE MAINS IS 36".

2. ALL CONNECTIONS TO EXISTING MAINS SHALL BE THE RESPONSIBILITY OF THE CONTRACTOR.

3. LEAKAGE TESTS AND ALIGNMENT (LAMPING) TESTS SHALL BE PERFORMED ON ALL NEW SEWER LINES UP TO THE CONNECTION POINT WITH THE EXISTING SEWER SYSTEM. THESE TESTS SHALL BE REQUESTED AND PAID FOR BY THE CONTRACTOR.

4. LAMPING TESTS SHALL BE PERFORMED ON GRAVITY SEWERS FROM MANHOLE TO MANHOLE UP TO AND INCLUDING THE POINT OF CONNECTION TO THE EXISTING SEWER SYSTEM.

5. LEAKAGE TESTS SHALL BE PERFORMED ON ALL SEGMENTS OF A GRAVITY SEWER SYSTEM, INCLUDING SERVICE LATERALS AND MANHOLES, FOR A CONTINUOUS PERIOD OF NO LESS THAN 2 HOURS. AT THE END OF THE TEST, THE TOTAL MEASURED LEAKAGE SHALL NOT EXCEED 100 GALLONS PER INCH OF PIPE DIAMETER PER MILE PER DAY FOR ANY SECTION OF THE SYSTEM, WITH ZERO ALLOWABLE LEAKAGE FOR LATERALS AND MANHOLES. AN EXFILTRATION OR INFILTRATION TEST SHALL BE PERFORMED WITH A MINIMUM POSITIVE HEAD OF 2 FEET ON THE SECTION BEING TESTED.

6. FORCE MAINS SHALL BE PRESSURE-TESTED IN ACCORDANCE WITH RULE 62-555.330 (FAC). THE PRESSURE TEST SHALL CONSIST OF HOLDING A TEST PRESSURE OF 150 PSI ON THE PIPELINE FOR A CONTINUOUS PERIOD OF 2 HOURS THE MAXIMUM ALLOWABLE LEAKAGE SHALL BE DETERMINED BY THE FOLLOWING FORMULA:

$$\frac{L = S \times D \times \sqrt{P}}{148{,}000}$$

WHERE:

L = ALLOWABLE LEAKAGE FOR SYSTEM IN GALLONS PER HOUR

D = PIPE DIAMETER IN INCHES

S = LENGTH OF LINES IN LINEAL FEET

P = AVERAGE TEST PRESSURE IN PSI

7. CONTRACTOR SHALL BE RESPONSIBLE FOR IDENTYFYING CONFLICTS WITH FORCE MAINS PLACED AT MINIMUM COVER. IN CASE OF CONFLICT, FORCE MAIN SHALL BE LOWERED TO PASS UNDER CONFLICTS WITH 12" MINIMUM SEPARATION FROM WATER MAINS AND 6" MINIMUM SEPARATION FROM OTHER UTILITIES. NO ADDITIONAL PAYMENT SHALL BE DUE TO CONTRACTOR FOR LOWERING THE MAIN OR THE ADDITIONAL FITTINGS USED THEREON.

8. WHENEVER IT IS NECESSARY, IN THE INTEREST OF SAFETY, TO BRACE THE SIDES OF A TRENCH, THE CONTRACTOR SHALL FURNISH, PUT IN PLACE AND MAINTAIN SUCH SHEETING OR BRACING AS MAY BE NECESSARY TO SUPPORT THE SIDES OF THE EXCAVATION TO ENSURE PERSONNEL SAFETY, AND TO PREVENT MOVEMENT WHICH CAN IN ANY WAY DAMAGE THE WORK OR ENDANGER ADJACENT STRUCTURES. THE CONTRACTOR SHALL BE SOLELY RESPONSIBLE FOR THE SEQUENCE, METHODS AND MEANS OF CONSTRUCTION, AND FOR THE IMPLEMENTATION OF ALL OSHA AND OTHER SAFETY REQUIREMENTS.

CITY OF HOLLYWOOD, FLORIDA — DIAMOND OF THE GOLD COAST — INCORPORATED 1925	ISSUED: 03/01/1994	DEPARTMENT OF PUBLIC UTILITIES STANDARD DETAIL	REVISED: 06/08/2014
	DRAWN: EAM	SANITARY SEWER MAIN CONSTRUCTION NOTES	DRAWING NO. S-01
	APPROVED: XXX		

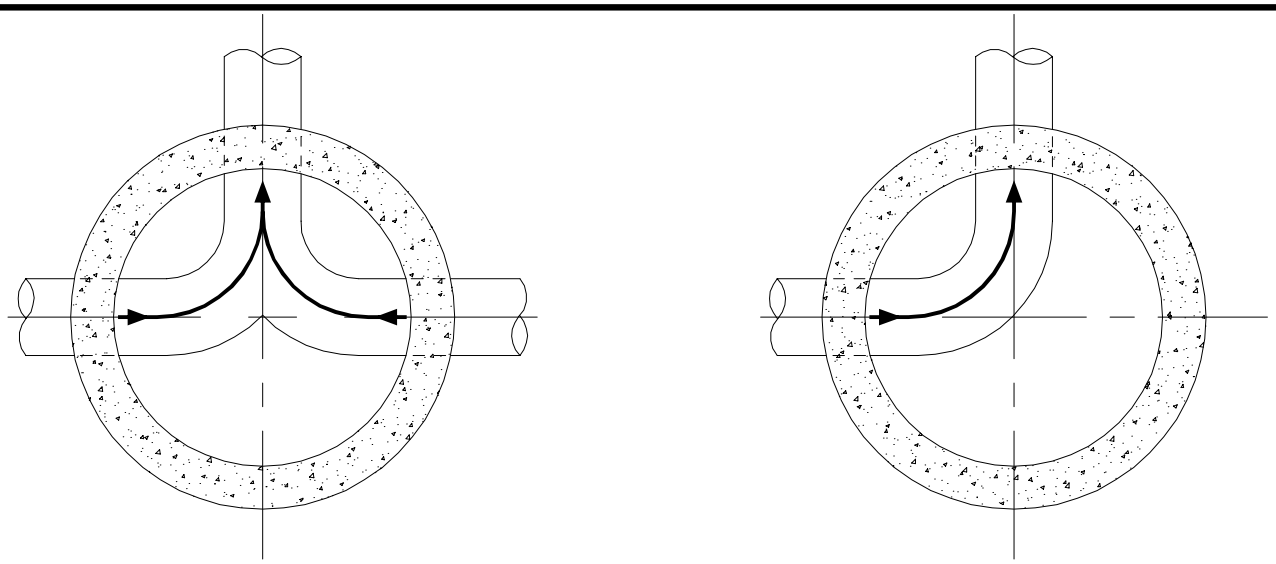

PLAN OF BOTTOM
AND FLOW CURVES

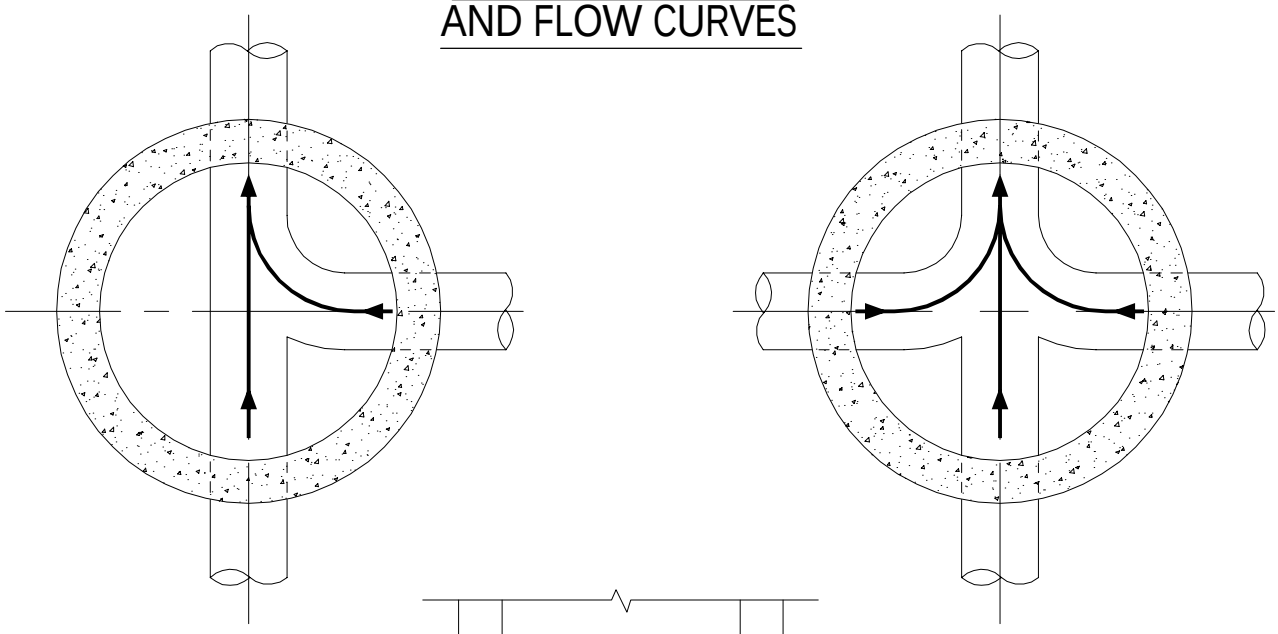

TYPICAL SECTION

NOTES:

1. INVERT CHANNELS TO BE CONSTRUCTED FOR SMOOTH FLOW WITH NO OBSTRUCTIONS.
2. SPILLWAYS SHALL BE CONSTRUCTED BETWEEN PIPES WITH DIFFERENT INVERT ELEVATIONS PROVIDING SMOOTH FLOWS.
3. CHANNELS FOR FUTURE CONNECTIONS (STUBS) SHALL BE CONSTRUCTED FILLED WITH SAND & COVERED WITH 1" OF MORTAR.
4. WHEN FLOW LINE DEFLECTS MORE THAN 45°, A DROP OF 0.10' IS REQUIRED.

CITY OF HOLLYWOOD, FLORIDA — DIAMOND OF THE GOLD COAST — INCORPORATED 1925	ISSUED: 03/01/1994	DEPARTMENT OF PUBLIC UTILITIES STANDARD DETAIL	REVISED: 06/08/2014
	DRAWN: EAM	MANHOLE FLOW PATTERNS	DRAWING NO. S-02
	APPROVED: XXX		

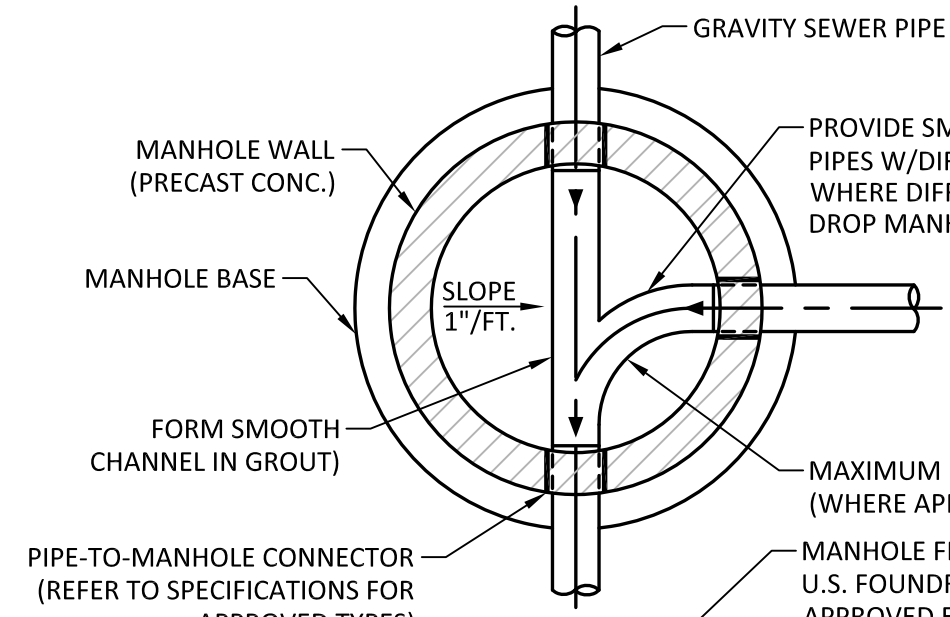

PLAN

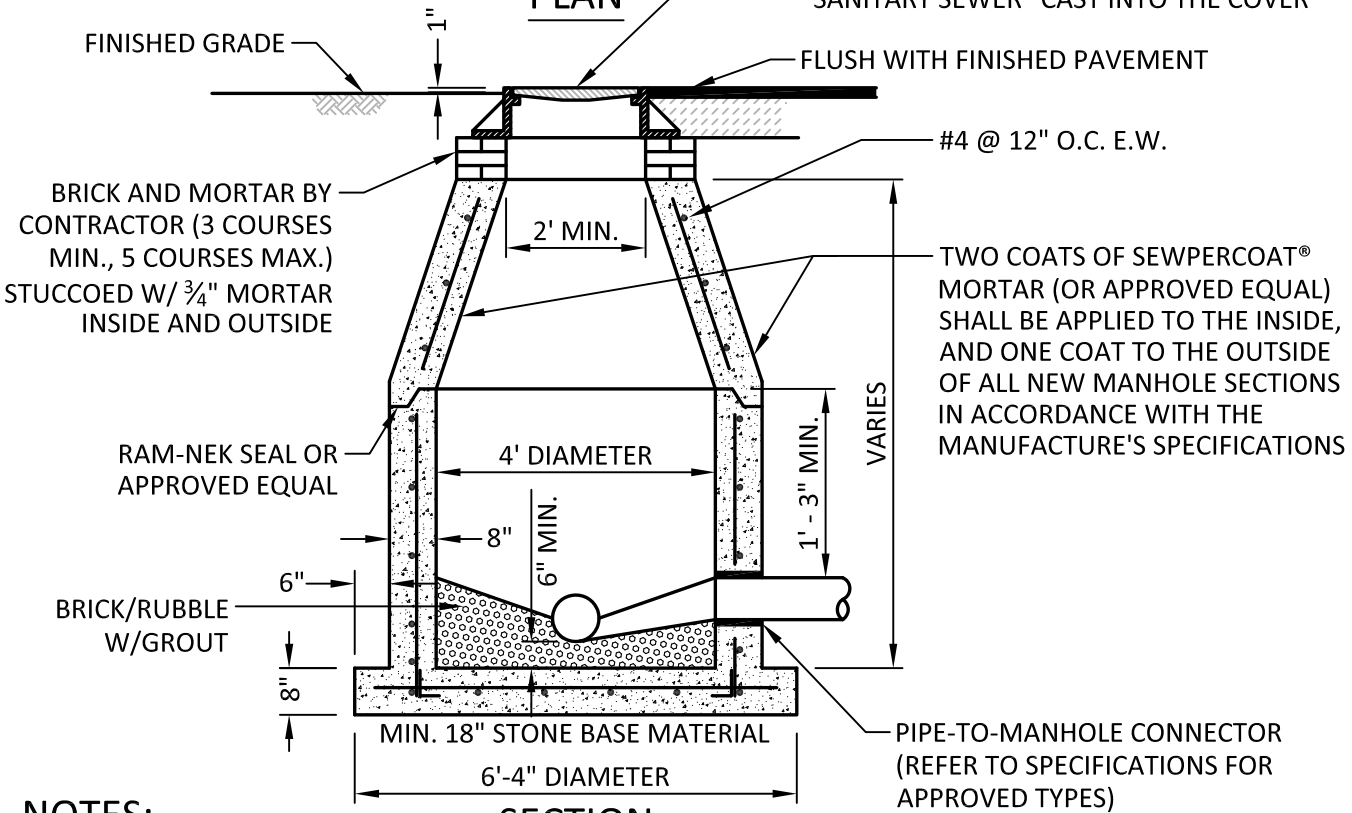

SECTION

NOTES:

1. SHOP DRAWINGS SHOWING ALL DIMENSIONS, INCLUDING CONCRETE REINFORCEMENT AND BUOYANCY, SHALL BE SUBMITTED TO THE CITY PRIOR TO INSTALLATION.
2. THE BOTTOM SLAB SHALL BE CAST MONOLITHICALLY WITH THE LOWER WALL SECTION TO A MINIMUM OF 3' ABOVE SLAB BASE.
3. NO CONSTRUCTION JOINTS ARE ALLOWED BELOW ELEVATION +2.00 NAVD. ABOVE ELEVATION +2.00 NAVD CONSTRUCTION JOINTS ARE ALLOWED, IF ADEQUATE JOINTS WITH KEY-WAYS AND WATER STOPS ARE PROVIDED. SUBMIT SHOP DRAWINGS OF JOINT DETAILS TO THE ENGINEER FOR APPROVAL.

CITY OF HOLLYWOOD, FLORIDA — DIAMOND OF THE GOLD COAST — INCORPORATED 1925	ISSUED: 03/01/1994	DEPARTMENT OF PUBLIC UTILITIES STANDARD DETAIL	REVISED: 07/18/2018
	DRAWN: EAM	STANDARD PRECAST MANHOLE	DRAWING NO. S-03
	APPROVED: XXX		

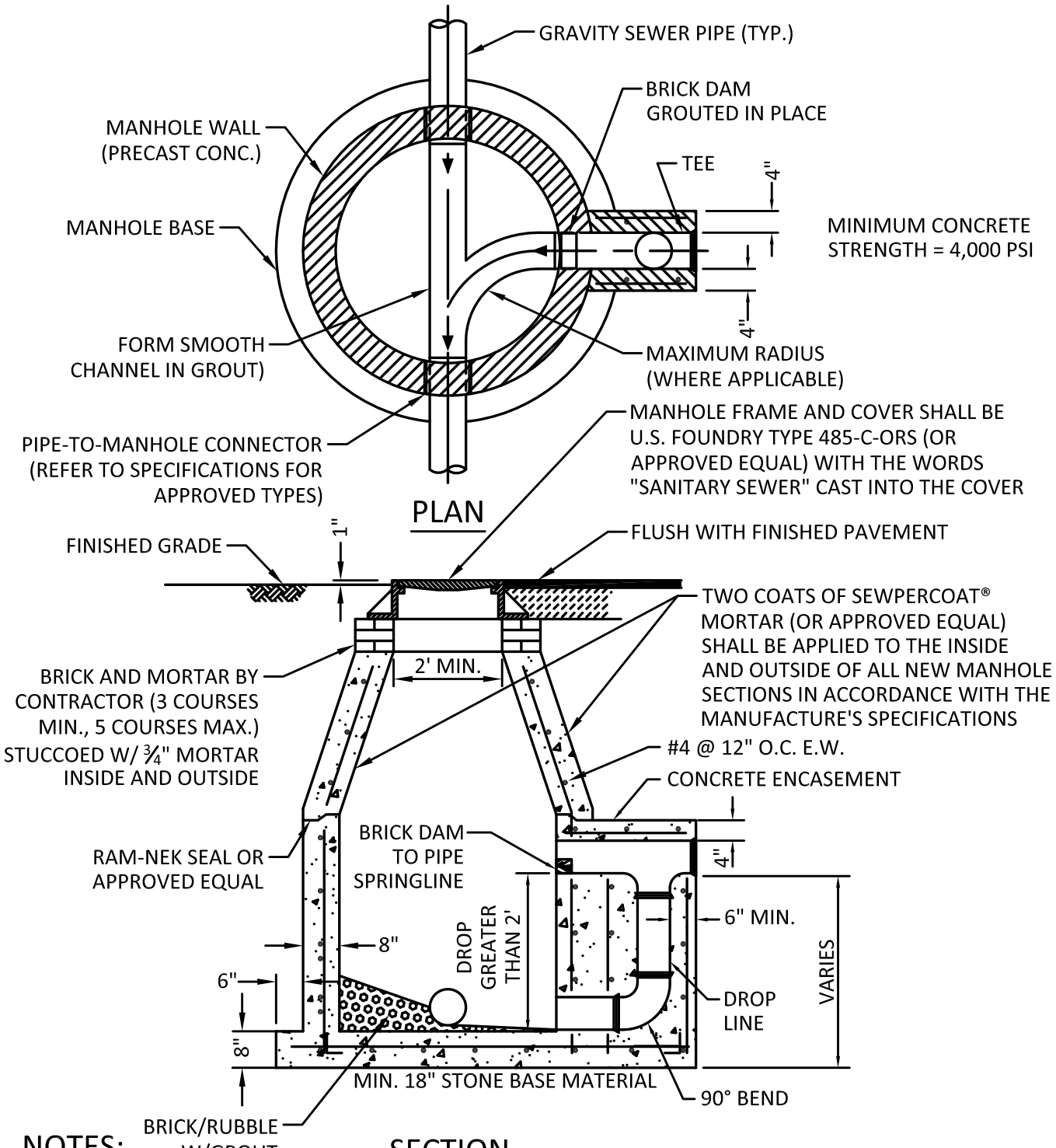

NOTES:

1. SHOP DRAWINGS SHOWING ALL DIMENSIONS, INCLUDING CONCRETE REINFORCEMENT AND BUOYANCY, SHALL BE SUBMITTED TO THE CITY PRIOR TO INSTALLATION.
2. THE BOTTOM SLAB SHALL BE CAST MONOLITHICALLY WITH THE LOWER WALL SECTION TO A MINIMUM OF 3' ABOVE SLAB BASE.
3. NO CONSTRUCTION JOINTS ARE ALLOWED BELOW ELEVATION +2.00 NAVD. ABOVE ELEVATION +2.00 NAVD CONSTRUCTION JOINTS ARE ALLOWED, IF ADEQUATE JOINTS WITH KEY-WAYS AND WATER STOPS ARE PROVIDED. SUBMIT SHOP DRAWINGS OF JOINT DETAILS TO THE ENGINEER FOR APPROVAL.

CITY OF HOLLYWOOD, FLORIDA — DIAMOND OF THE GOLD COAST — INCORPORATED 1925	ISSUED: 03/01/1994	DEPARTMENT OF PUBLIC UTILITIES STANDARD DETAIL	REVISED: 07/18/2018
	DRAWN: EAM	DROP MANHOLE	DRAWING NO. S-04
	APPROVED: XXX		

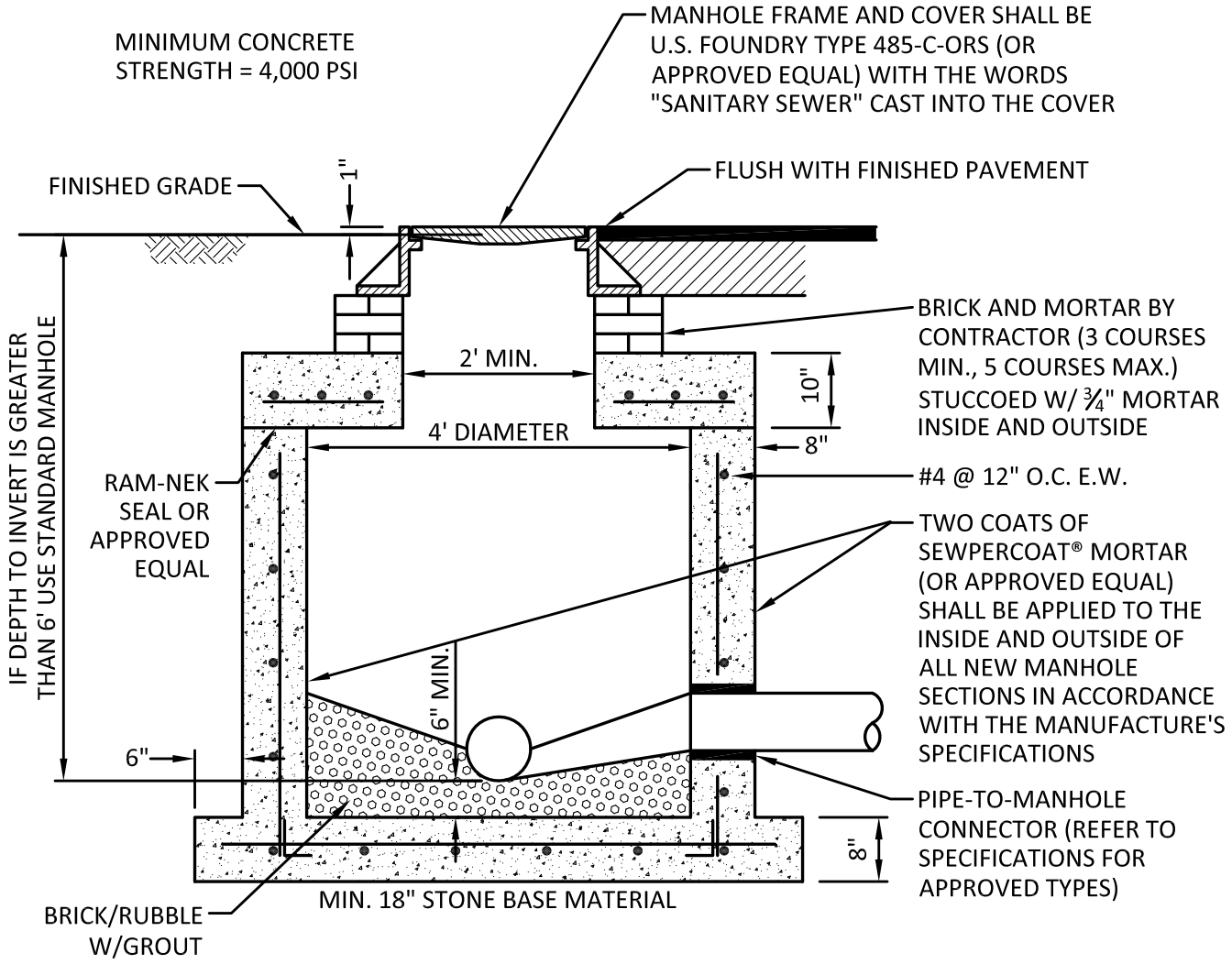

SECTION

NOTES:

1. SHOP DRAWINGS SHOWING ALL DIMENSIONS, INCLUDING CONCRETE REINFORCEMENT AND BUOYANCY, SHALL BE SUBMITTED TO THE CITY PRIOR TO INSTALLATION.
2. THE BOTTOM SLAB SHALL BE CAST MONOLITHICALLY WITH THE LOWER WALL SECTION TO A MINIMUM OF 3' ABOVE SLAB BASE.
3. NO CONSTRUCTION JOINTS ARE ALLOWED BELOW ELEVATION +2.00 NAVD. ABOVE ELEVATION +2.00 NAVD CONSTRUCTION JOINTS ARE ALLOWED, IF ADEQUATE JOINTS WITH KEY-WAYS AND WATER STOPS ARE PROVIDED. SUBMIT SHOP DRAWINGS OF JOINT DETAILS TO THE ENGINEER FOR APPROVAL.

CITY OF HOLLYWOOD, FLORIDA — DIAMOND OF THE GOLD COAST — INCORPORATED 1925	ISSUED: 03/01/1994	DEPARTMENT OF PUBLIC UTILITIES STANDARD DETAIL	REVISED: 07/18/2018
	DRAWN: EAM	SHALLOW MANHOLE	DRAWING NO. S-05
	APPROVED: XXX		

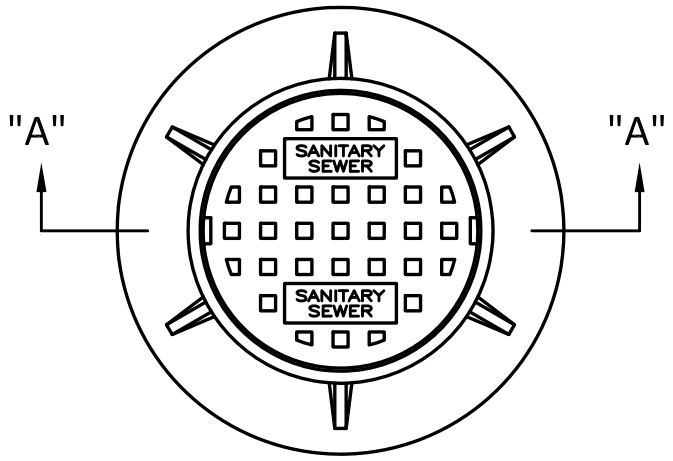

PLAN

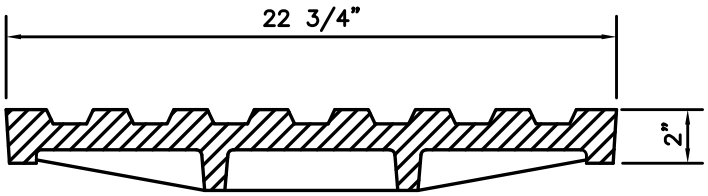

COVER SECTION "A-A"

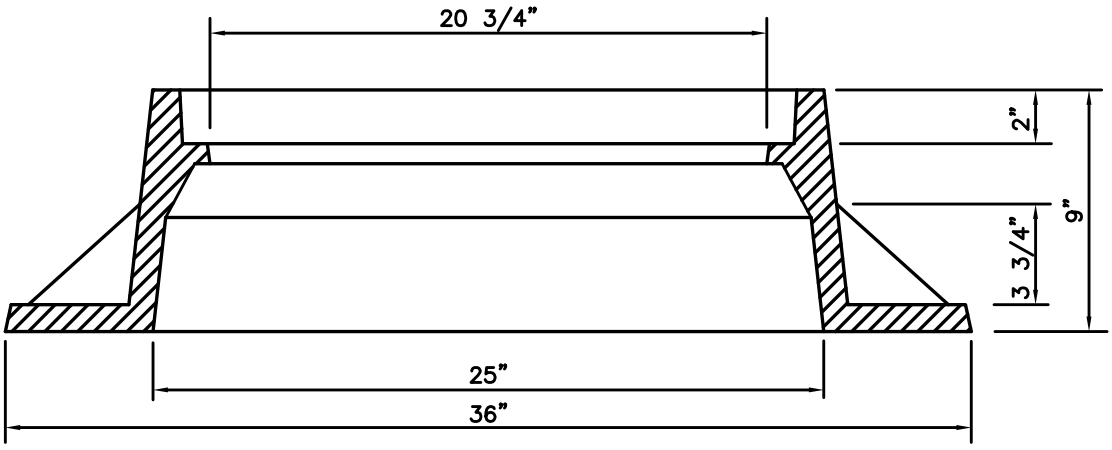

FRAME SECTION "A-A"

NOTES:

1. LETTERS ON COVER TO BE 3/8" HIGH, 1/4" TO 5/16" THICK AND FLUSH WITH TOP OF COVER.
2. ALL BEARING SURFACES TO BE MACHINED.
3. MINIMUM WEIGHTS: COVER - 160 LBS., TOTAL - 400 LBS.
4. MANHOLE FRAME AND COVER SHALL BE U.S. FOUNDRY 485-C-ORS WITH THE WORDS "SANITARY SEWER" CAST INTO THE COVER.

CITY OF HOLLYWOOD, FLORIDA — DIAMOND OF THE GOLD COAST — INCORPORATED 1925	ISSUED: 03/01/1994	DEPARTMENT OF PUBLIC UTILITIES STANDARD DETAIL	REVISED: 06/08/2014
	DRAWN: EAM	MANHOLE FRAME AND COVER	DRAWING NO. S-06
	APPROVED: XXX		

PLAN

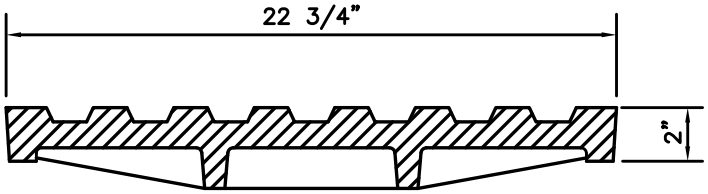

COVER SECTION "A-A"

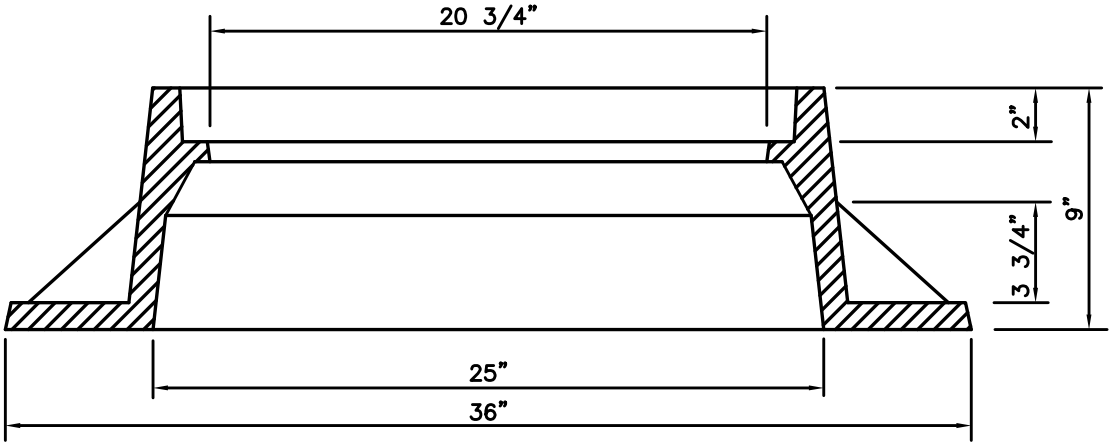

FRAME SECTION "A-A"

NOTES:

1. LETTERS ON COVER TO BE 3/8" HIGH, 1/4" TO 5/16" THICK AND FLUSH WITH TOP OF COVER.
2. ALL BEARING SURFACES TO BE MACHINED.
3. MINIMUM WEIGHTS: COVER - 160 LBS., TOTAL - 400 LBS.
4. MANHOLE FRAME AND COVER SHALL BE U.S. FOUNDRY 485-C-ORS TYPE EL, WITH THE WORDS "SANITARY SEWER" CAST INTO THE COVER.

	ISSUED: 03/01/1994	DEPARTMENT OF PUBLIC UTILITIES STANDARD DETAIL	REVISED: 06/08/2014
	DRAWN: EAM	MANHOLE FRAME AND COVER CITY OF HOLLYWOOD	DRAWING NO. S-06.1
	APPROVED: XXX		

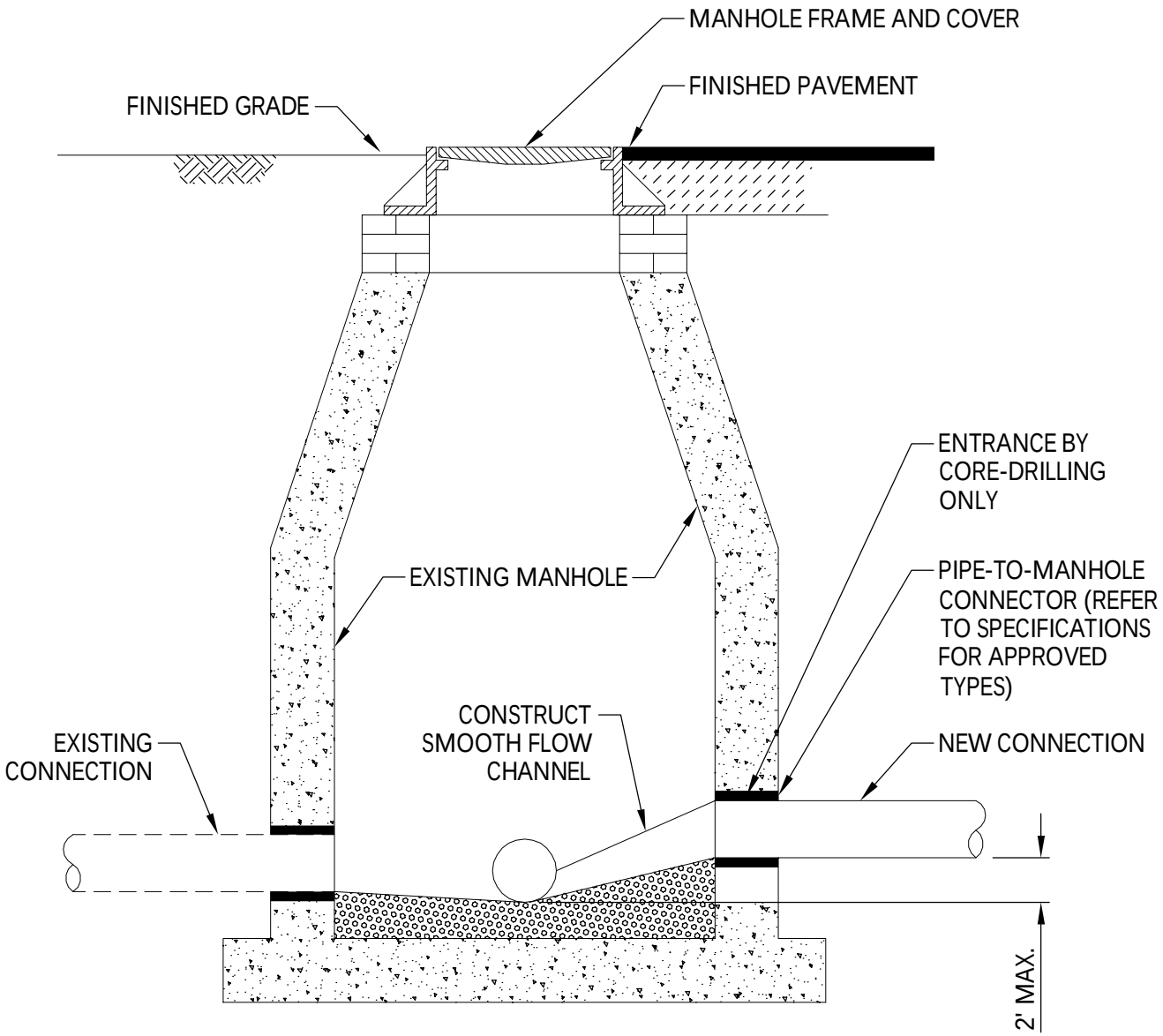

SECTION

CITY OF HOLLYWOOD, FLORIDA — DIAMOND OF THE GOLD COAST — INCORPORATED 1925	ISSUED: 03/01/1994	DEPARTMENT OF PUBLIC UTILITIES STANDARD DETAIL	REVISED: 06/08/2014
	DRAWN: EAM	NEW CONNECTION TO EXISTING MANHOLE	DRAWING NO. S-07
	APPROVED: XXX		

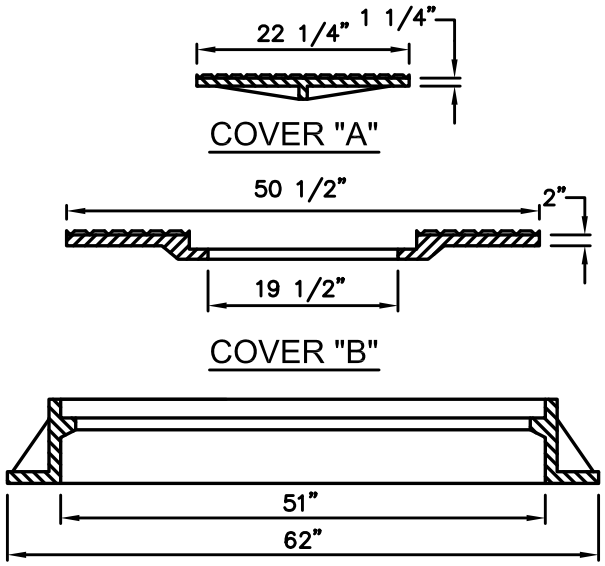

FRAME AND COVER NOTES:

1. AIR RELEASE VALVE MANHOLE COVERS AND FRAMES SHALL BE U.S. FOUNDRY TYPE 1341 RING WITH AG-M COVER, OR APPROVED EQUAL.
2. COVER "A" SHALL HAVE TWO ADJUSTABLE CAMLOCKS FOR SECURING IT TO COVER "B", AND FOUR 1"-DIAMETER VENT HOLES TO PREVENT UPLIFT DURING SUDDEN BURSTS OF AIR.
3. THE COVERS SHALL BE CAST LABELED "AIR RELEASE".
1. PROVIDE H-20 TRAFFIC BEARING FRAME AND COVER WITHIN TRAFFIC LANES OR SWALES ADJACENT TO ROADWAY.
2. ALL BEARING SURFACES TO BE MACHINED
3. MINIMUM WEIGHT 1840 LBS.
4. PICK HOLE COVERS "A" & "B".

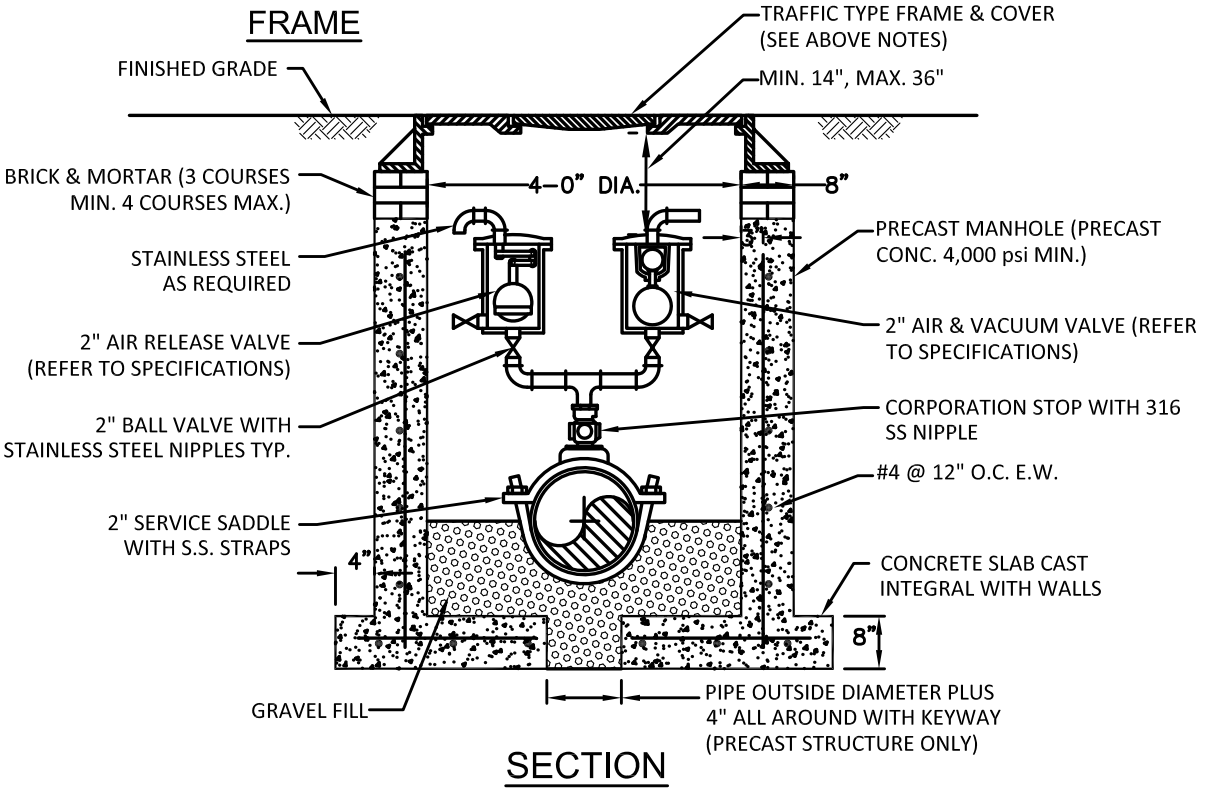

SECTION

NOTES:

1. BRICK MASONRY TO BE STUCCOED WITH 1/2" MORTAR INSIDE AND OUTSIDE.
2. MANHOLE WALLS TO BE COATED INSIDE AND OUTSIDE WITH 16 MIL THICKNESS APPROVED COATING.
3. ALL OPENINGS AROUND PIPE SHALL BE SEALED WITH WATERPROOF, EXPANDING GROUT.
4. ACTUAL LOCATION AND MANHOLE FRAME ELEVATION SHALL BE AS INDICATED ON THE PLANS.
5. SHOP DRAWINGS SHALL BE SUBMITTED BY CONTRACTOR TO THE CITY PRIOR TO INSTALLATION. SHOP DRAWINGS TO SHOW DIMENSIONS, AND CONCRETE REINFORCEMENT.
6. AIR RELEASE VALVES SHALL BE INSTALLED AT LOCATIONS RECOMMENDED BY SECTION 49.2 OF THE "RECOMMENDED STANDARDS FOR WASTEWATER FACILITIES" (RSWF).

CITY OF HOLLYWOOD, FLORIDA — DIAMOND OF THE GOLD COAST — INCORPORATED 1925	ISSUED: 03/01/1994	DEPARTMENT OF PUBLIC UTILITIES STANDARD DETAIL	REVISED: 07/25/2018
	DRAWN: EAM	AUTOMATIC AIR RELEASE VALVE (A.R.V.) AND MANHOLE	DRAWING NO. S-08
	APPROVED: XXX		

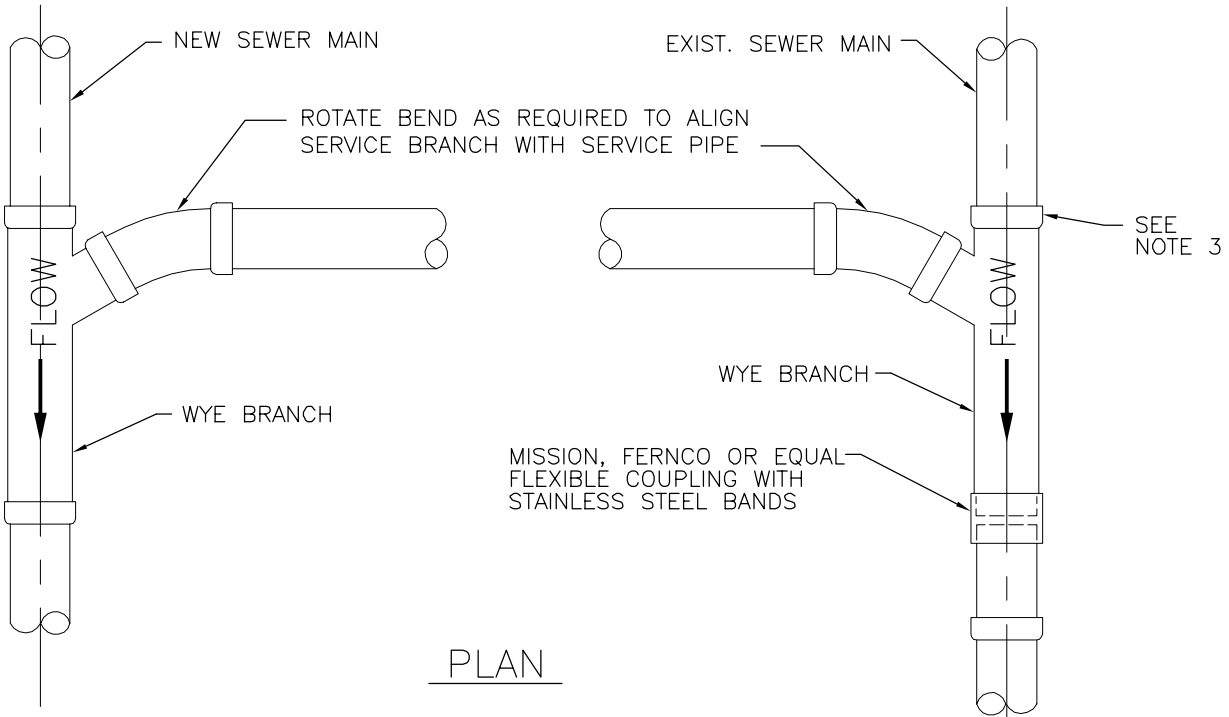

PLAN

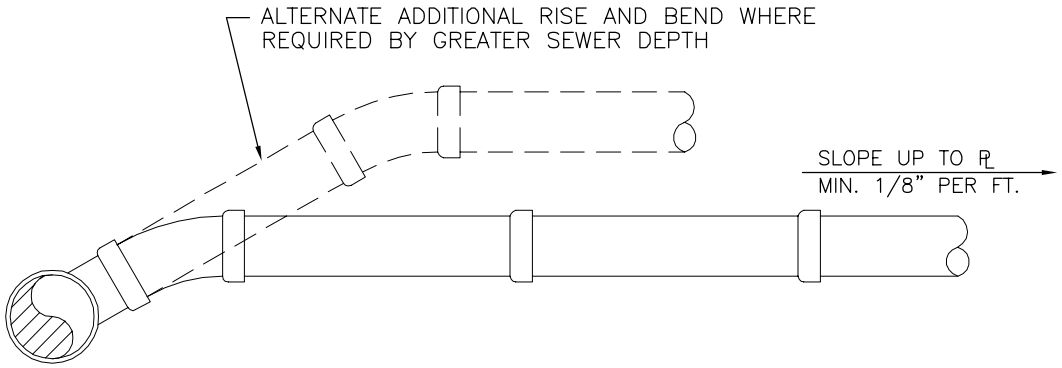

ELEVATION

NOTES:

1. SINGLE SERVICE CONNECTIONS SHALL USE 6" PIPE AND FITTINGS.
2. USE RISER CONNECTIONS WHERE INVERT OF SEWER IS GREATER THAN 7'-0" DEEP.
3. WHERE BELL OF WYE AND SPIGOT OF EXISTING MAIN ARE NOT COMPATIBLE, USE A SECOND FLEXIBLE COUPLING.

CITY OF HOLLYWOOD, FLORIDA — DIAMOND OF THE GOLD COAST — INCORPORATED 1925	ISSUED: 03/01/1994	DEPARTMENT OF PUBLIC UTILITIES STANDARD DETAIL	REVISED: 06/08/2014
	DRAWN: EAM	WYE BRANCH CONNECTION	DRAWING NO. S-09
	APPROVED: XXX		

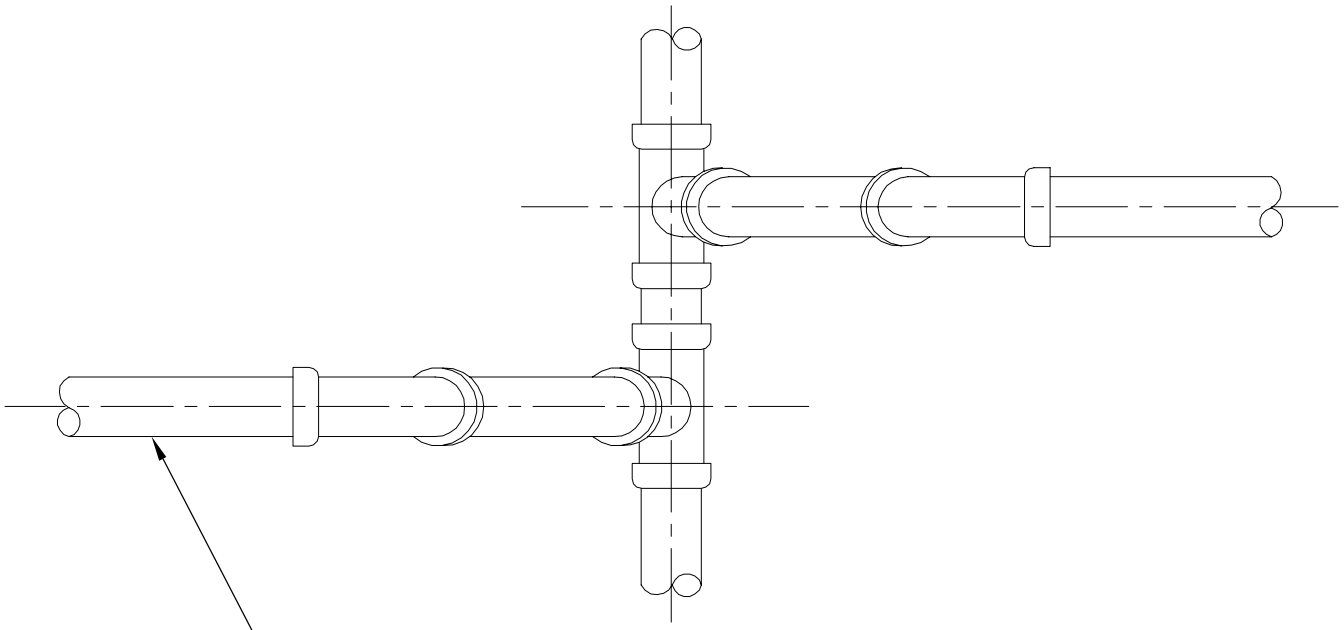

PLAN

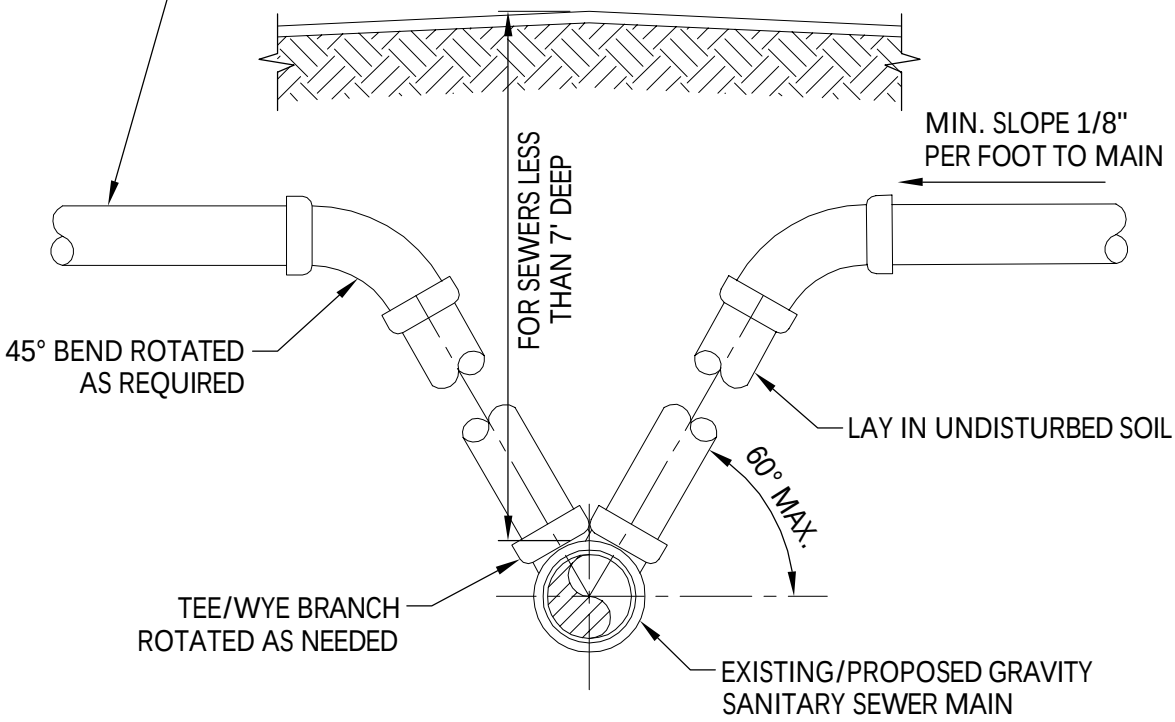

FRONT ELEVATION

NOTES:

1. MODIFIED RISER CONNECTION TO BE USED ONLY WHEN DIRECTED BY THE CITY.
2. NO. 57 ROCK OR ¾" DRAINFIELD LIMEROCK MAY BE USED AS BEDDING OVER UNDISTURBED SOIL WITH PVC PIPE.
3. SINGLE SERVICE CONNECTIONS SHALL USE 6" (MIN.) DIAMETER PIPE AND FITTINGS.

CITY OF HOLLYWOOD, FLORIDA — DIAMOND OF THE GOLD COAST — INCORPORATED 1925	ISSUED: 03/01/1994	DEPARTMENT OF PUBLIC UTILITIES STANDARD DETAIL	REVISED: 06/08/2014
	DRAWN: EAM	SANITARY SEWER LATERAL MODIFIED RISER	DRAWING NO. S-10
	APPROVED: XXX		

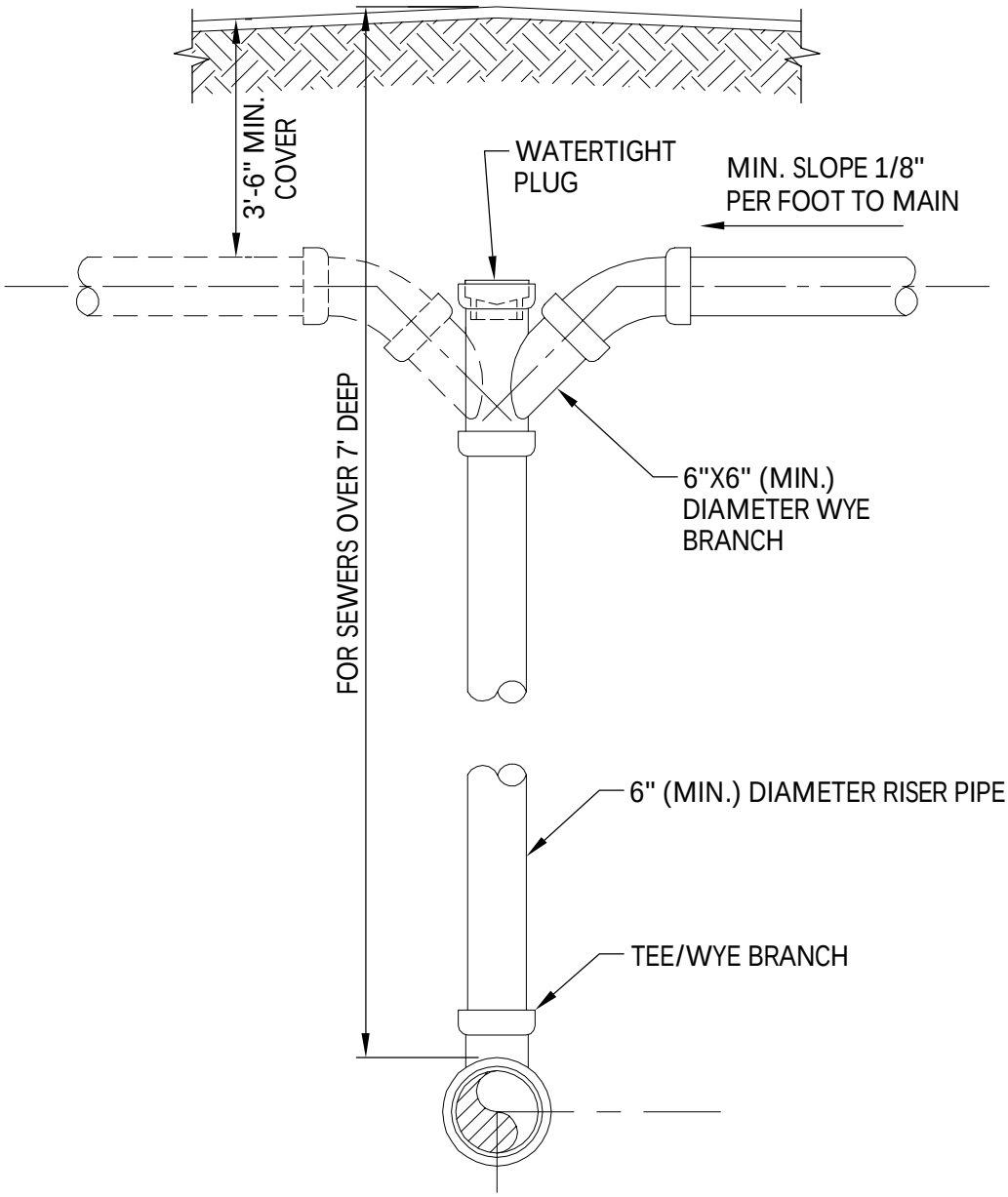

FRONT ELEVATION

NOTES:

1. RISER CONNECTION TO BE USED ONLY WHEN SANITARY SEWER IS MORE THAN 7'-0" DEEP OR WHEN DIRECTED BY THE CITY.
2. NO. 57 ROCK OR ¾" DRAINFIELD LIMEROCK MAY BE USED AS BEDDING OVER UNDISTURBED SOIL WITH PVC PIPE.
3. SINGLE SERVICE CONNECTIONS SHALL USE 6" (MIN.) DIAMETER PIPE AND FITTINGS.

CITY OF HOLLYWOOD, FLORIDA — DIAMOND OF THE GOLD COAST — INCORPORATED 1925	ISSUED: 03/01/1994	DEPARTMENT OF PUBLIC UTILITIES STANDARD DETAIL	REVISED: 06/08/2014
	DRAWN: EAM	SANITARY SEWER LATERAL VERTICAL RISER	DRAWING NO. S-11
	APPROVED: XXX		

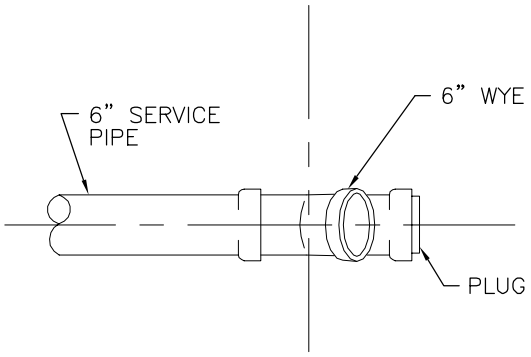

PLAN

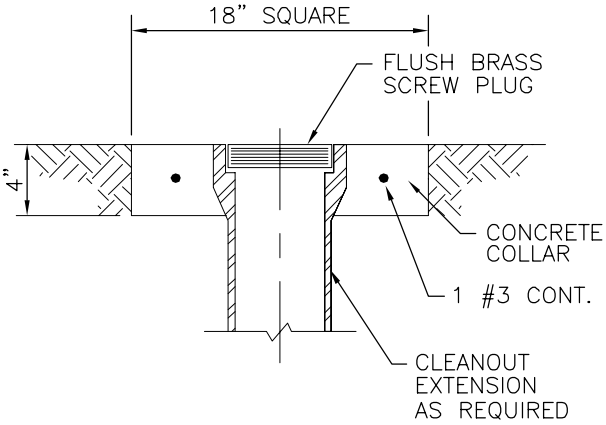

YARD TYPE

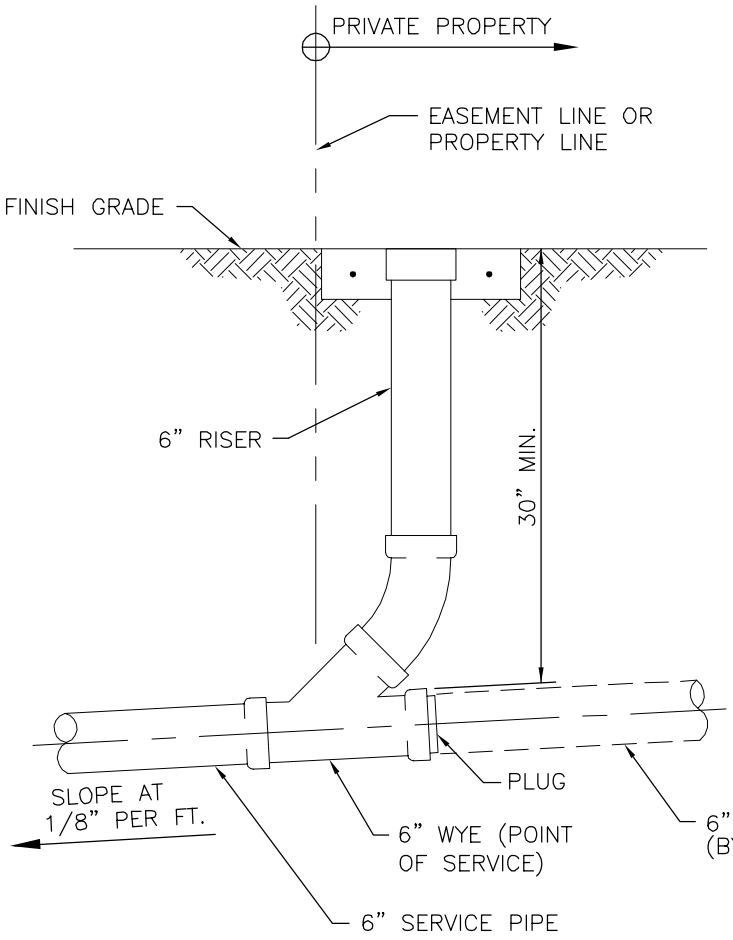

ELEVATION

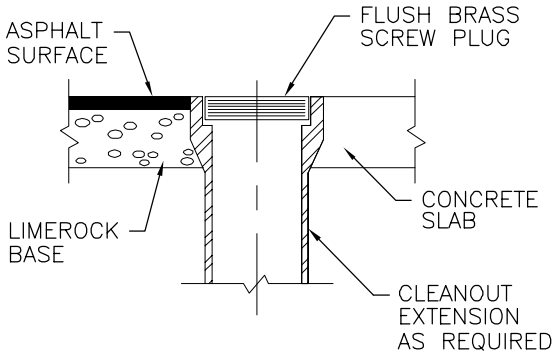

PAVEMENT TYPE

CLEANOUT DETAILS

SINGLE SERVICE CONNECTION

CITY OF HOLLYWOOD, FLORIDA — DIAMOND OF THE GOLD COAST — INCORPORATED 1925	ISSUED: 03/01/1994	DEPARTMENT OF PUBLIC UTILITIES STANDARD DETAIL	REVISED: 06/08/2014
	DRAWN: EAM	SEWER SERVICE CONNECTION AND CLEANOUT AT PROPERTY LINE	DRAWING NO. S-12
	APPROVED: XXX		

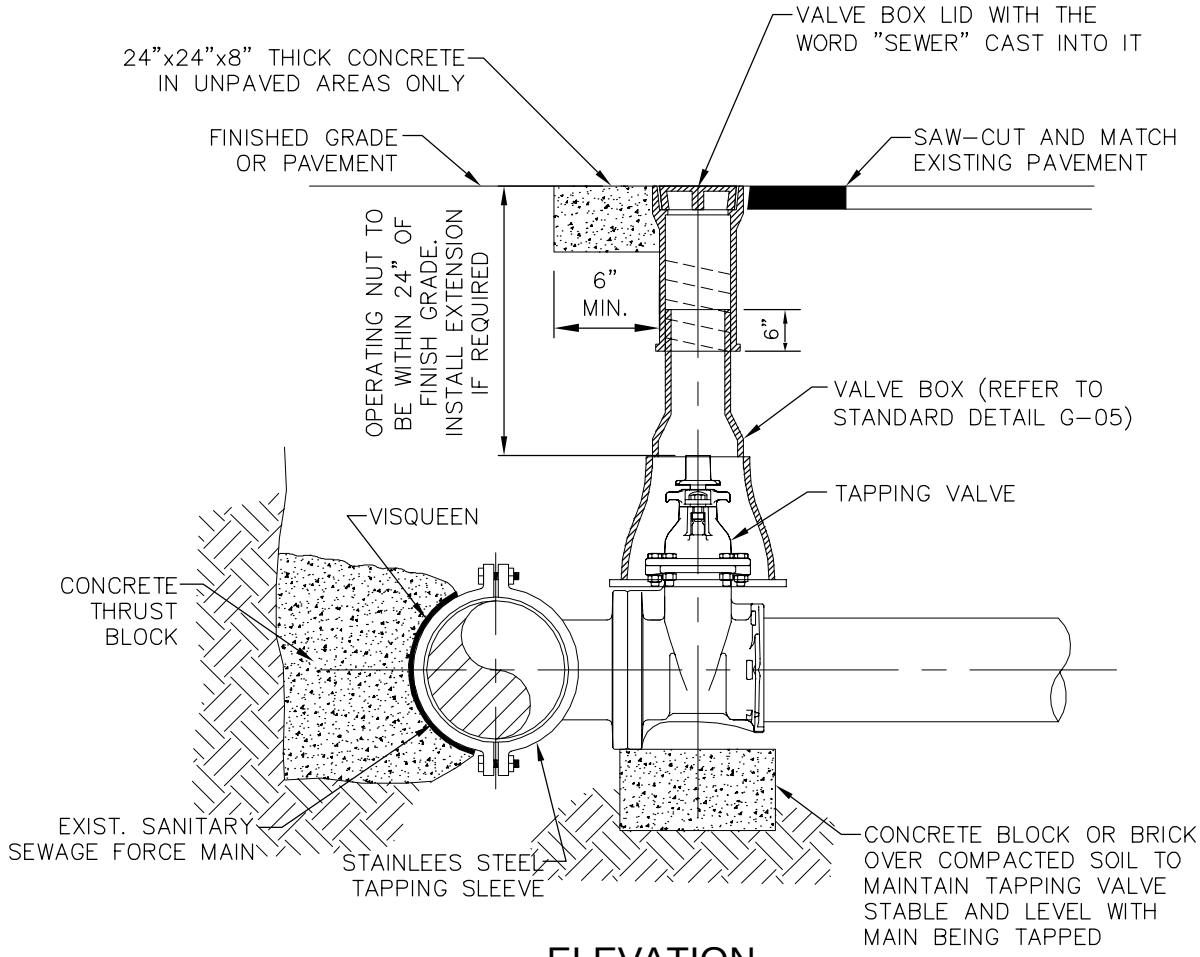

ELEVATION

NOTES:

1. REFER TO STANDARD DETAIL GS-06, "TYPICAL TAPPING SLEEVE AND VALVE SETTING"
2. REFER TO STANDARD DETAIL S-14, "PRIVATE FORCE MAIN TIE-IN AT PROPERTY LINE".

CITY OF HOLLYWOOD, FLORIDA — DIAMOND OF THE GOLD COAST — INCORPORATED 1925	ISSUED: 03/01/1994	DEPARTMENT OF PUBLIC UTILITIES STANDARD DETAIL	REVISED: 06/08/2014
	DRAWN: EAM	FORCE MAIN CONNECTION	DRAWING NO. S-13
	APPROVED: XXX		

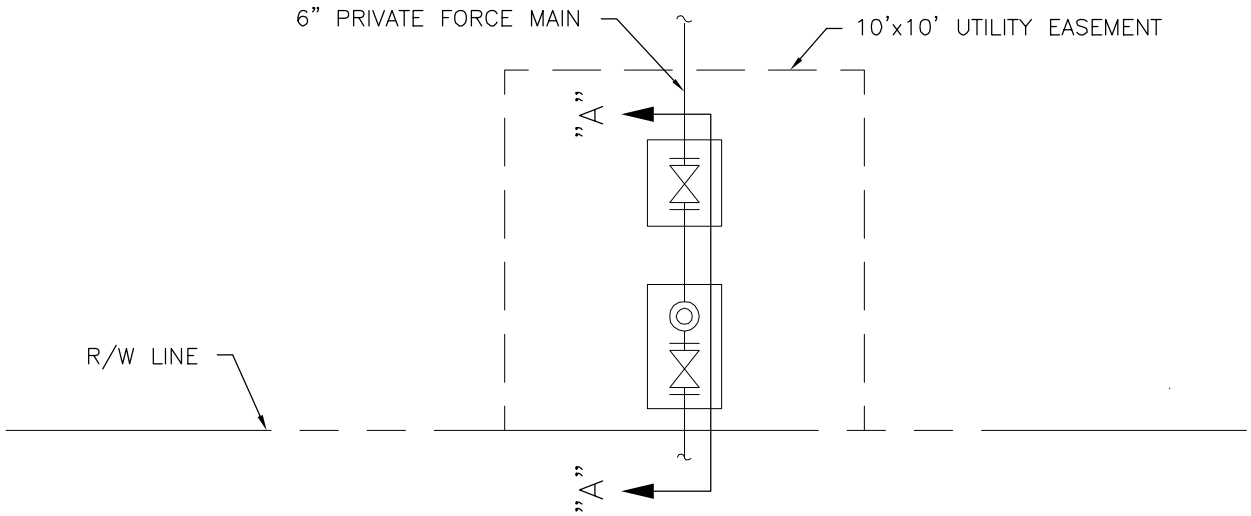

PLAN

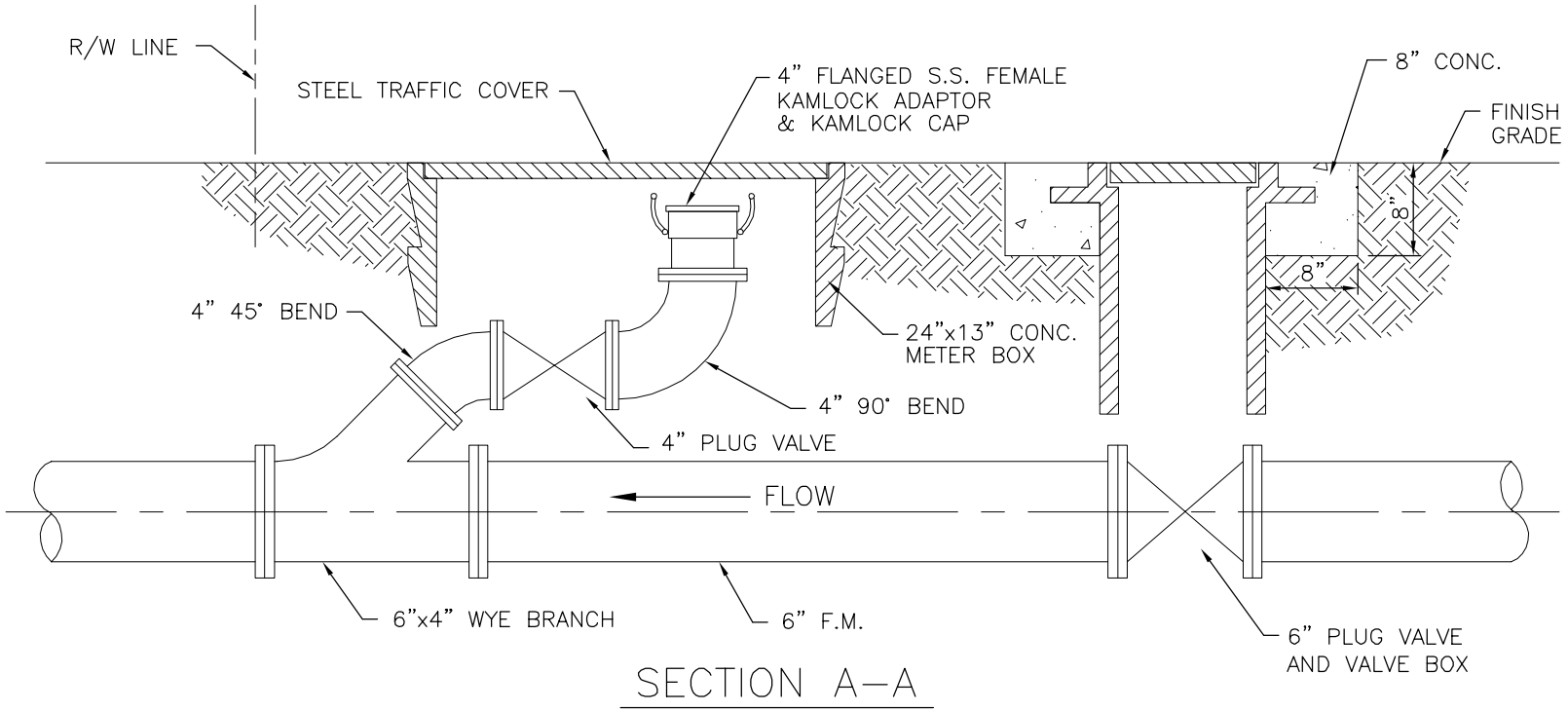

SECTION A–A

CITY OF HOLLYWOOD, FLORIDA
INCORPORATED 1925
DIAMOND OF THE GOLD COAST

ISSUED: 03/01/1994
DRAWN: EAM
APPROVED: XXX

DEPARTMENT OF PUBLIC UTILITIES STANDARD DETAIL

PRIVATE FORCE MAIN TIE-IN AT PROPERTY LINE

REVISED: 06/08/2014

DRAWING NO. S-14

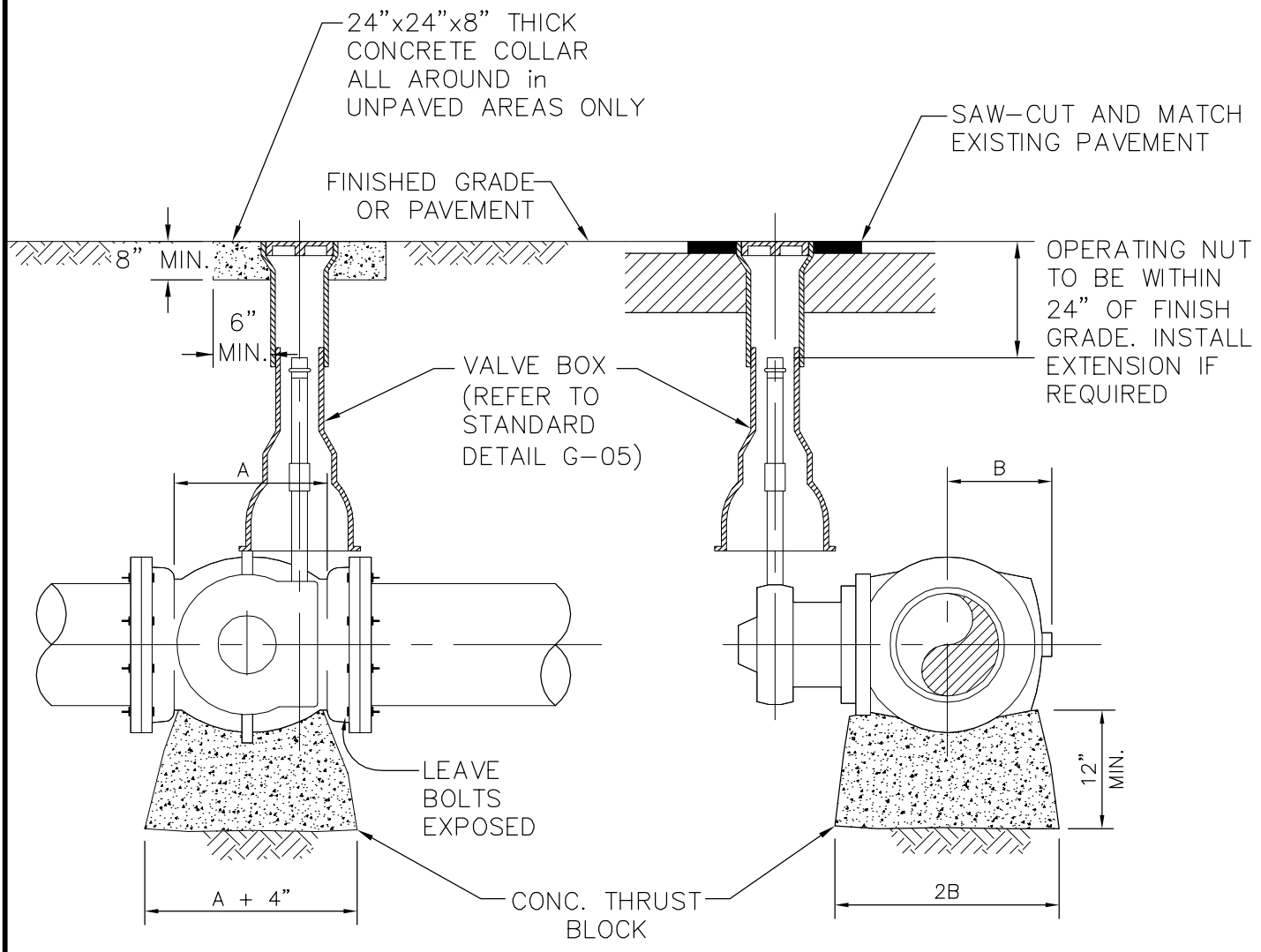

SIDE VIEW

FRONT VIEW

NOTE:
ALL CONCRETE TO BE 3000 P.S.I.

CITY OF HOLLYWOOD, FLORIDA — DIAMOND OF THE GOLD COAST — INCORPORATED 1925	ISSUED: 03/01/1994	DEPARTMENT OF PUBLIC UTILITIES STANDARD DETAIL	REVISED: 06/08/2014
	DRAWN: EAM	PLUG VALVE	DRAWING NO. S-15
	APPROVED: XXX		

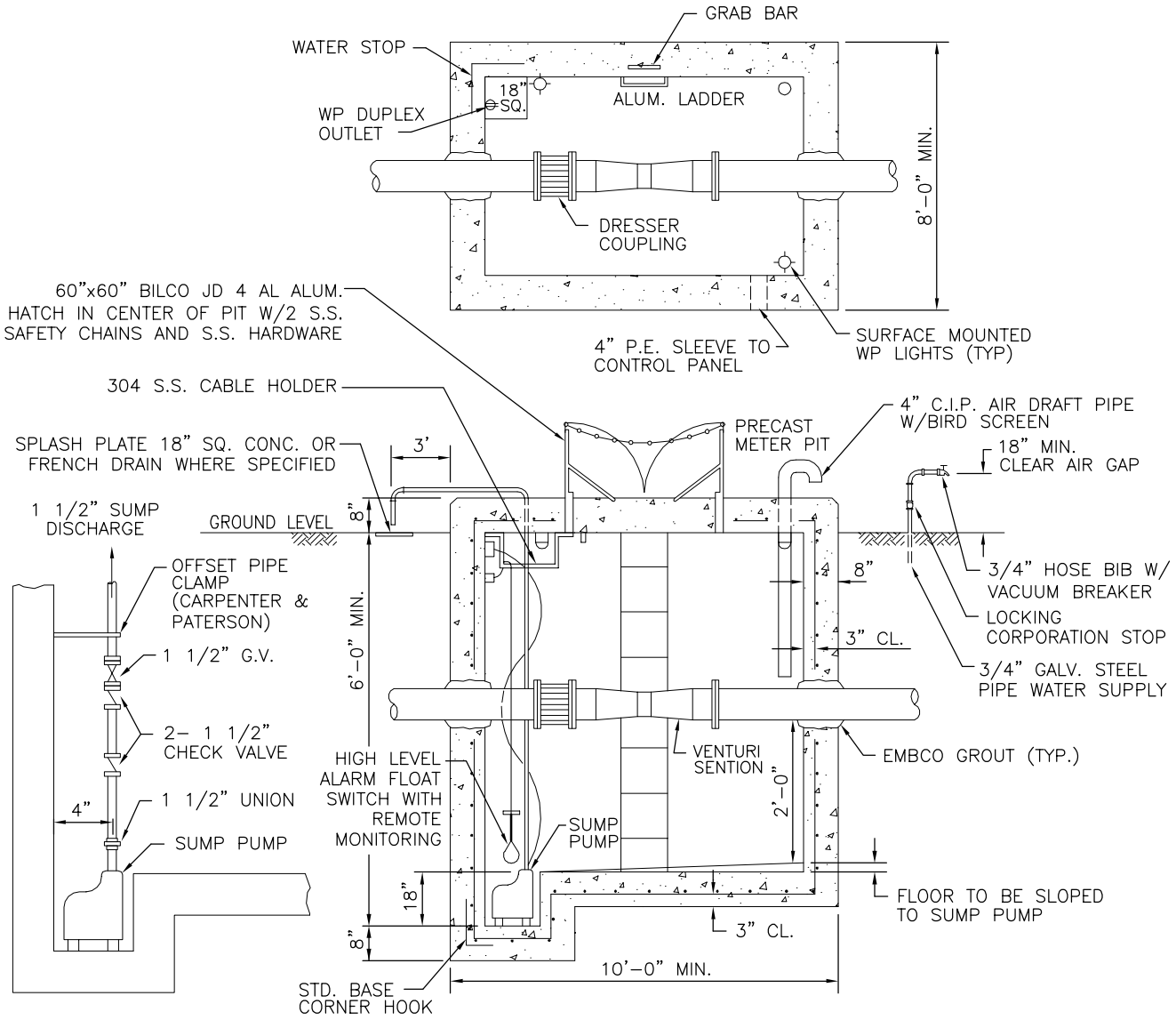

SUMP PUMP DETAIL

METER PIT DETAIL

NOTES:

1. SHOP DRAWINGS SHALL BE SUBMITTED BY CONTRACTOR TO THE CITY PRIOR TO INSTALLATION. SHOP DRAWINGS TO SHOW ALL CALCULATIONS AND DIMENSIONS, INCLUDING CONCRETE REINFORCEMENT AND UPLIFT, AND SHALL BE SIGNED AND SEALED BY A FLORIDA REGISTERED PROFESSIONAL ENGINEER.
2. CONCRETE MIN. 4000 P.S.I. AT 28 DAYS, TYPE II, EXPOSED EDGES OF SLAB TO HAVE 3/4" CHAMFER.
3. THE CONTRACTOR SHALL FURNISH AND INSTALL THE FLOW METER AND INSTRUMENTATION AS SHOWN ON THE PLANS. THE FLOW METER AND ASSOCIATED INSTRUMENTATION IS TO PROVIDE FOR FLOW MEASUREMENT, INDICATING, RECORDING AND TOTALIZING OF SEWAGE IN A FULL PIPELINE OVER RANGES SPECIFIED. ACCURACY OF THE METERING SYSTEM, INCLUDING READOUT INSTRUMENTS, SHALL BE _____ OF THE ACTUAL RATE OVER THE SPECIFIED RANGE. LINEARITY AND REPEATABILITY SHALL BE _____.
4. THE METER SHALL BE _____.
5. SUMP PUMP SHALL BE _____ 1/3 HP (OR APPROVED EQUAL WITH BALL FLOAT ACTUATOR). THE POWER OUTLET SHOULD BE MOUNTED ABOVE THE EXPECTED HIGH WATER FLOOD LEVEL.
6. INSTALL HIGH LEVEL ALARM SENSOR (FLOAT SWITCH) IN METER PIT WITH REMOTE MONITORING.

*CODE: (3) 0-5 TO 0-30" H_2O
(4) 0-25 TO 0-150" H_2O
(5) 0-125 TO 0-750" H_2O

CITY OF HOLLYWOOD, FLORIDA — DIAMOND OF THE GOLD COAST — INCORPORATED 1925	ISSUED: 03/01/1994	DEPARTMENT OF PUBLIC UTILITIES STANDARD DETAIL	REVISED: 06/08/2014
	DRAWN: EAM	SEWAGE FORCE MAIN METER	DRAWING NO. S-16
	APPROVED: XXX		

WATER SYSTEM NOTES:

1. NEW OR RELOCATED UNDERGROUND WATER MAINS INCLUDED IN THIS PROJECT THAT WILL CROSS ANY EXISTING OR PROPOSED GRAVITY OR VACUUM-TYPE SANITARY SEWER OR STORM SEWER WILL BE LAID SO THE OUTSIDE OF THE WATER MAIN IS AT LEAST SIX INCHES ABOVE THE OTHER PIPELINE OR AT LEAST 12 INCHES BELOW THE OTHER PIPELINE.

2. NEW OR RELOCATED UNDERGROUND WATER MAINS INCLUDED IN THIS PROJECT THAT WILL CROSS ANY EXISTING OR PROPOSED PRESSURE-TYPE SANITARY SEWER, WASTEWATER OR STORM WATER FORCE MAIN, OR PIPELINE CONVEYING RECLAIMED WATER WILL BE LAID SO THE OUTSIDE OF THE WATER MAIN IS AT LEAST 12 INCHES ABOVE OR BELOW THE OTHER PIPELINE. [FAC 62-555.314(2); EXCEPTIONS ALLOWED UNDER FAC 62-555.314(5)].

3. AT ALL UTILITY CROSSINGS DESCRIBED ABOVE, ONE FULL LENGTH OF WATER MAIN PIPE WILL BE CENTERED ABOVE OR BELOW THE OTHER PIPELINE SO THE WATER MAIN JOINTS WILL BE AS FAR AS POSSIBLE FROM THE OTHER PIPELINE, OR THE PIPES WILL BE ARRANGED SO THAT ALL WATER MAIN JOINTS ARE AT LEAST THREE FEET FROM ALL JOINTS IN VACUUM-TYPE SANITARY SEWERS, STORM SEWERS, STORM WATER FORCE MAINS, OR PIPELINES CONVEYING RECLAIMED WATER REGULATED UNDER PART III OF CHAPTER 62-610, F.A.C., AND AT LEAST SIX FEET FROM ALL JOINTS IN GRAVITY OR PRESSURE-TYPE SANITARY SEWERS, WASTEWATER FORCE MAINS, OR PIPELINES CONVEYING RECLAIMED WATER NOT REGULATED UNDER PART III OF CHAPTER 62-610, F.A.C. [FAC 62-555.314(2); EXCEPTIONS ALLOWED UNDER FAC 62-555.314(5)].

4. NEW UNDERGROUND WATER MAINS INCLUDED IN THIS PROJECT TO BE DUCTILE IRON PIPE (D.I.P.) WHEN CROSSING BELOW SANITARY SEWER MAINS.

5. POLYETHYLENE ENCASEMENT MATERIAL SHALL BE USED TO ENCASE ALL BURIED DUCTILE IRON PIPE, FITTINGS, VALVES, RODS, AND APPURTENANCES IN ACCORDANCE WITH AWWA C105, METHOD A. THE POLYETHYLENE TUBING SHALL BE CUT TWO FEET LONGER THAN THE PIPE SECTION AND SHALL OVERLAP THE ENDS OF THE PIPE BY ONE FOOT. THE POLYETHYLENE TUBING SHALL BE GATHERED AND LAPPED TO PROVIDE A SNUG FIT AND SHALL BE SECURED AT QUARTER POINTS WITH POLYETHYLENE TAPE. EACH END OF THE POLYETHYLENE TUBING SHALL BE SECURED WITH A WRAP OF POLYETHYLENE TAPE.

6. THE POLYETHYLENE TUBING SHALL PREVENT CONTACT BETWEEN THE PIPE AND BEDDING MATERIAL, BUT IS NOT INTENDED TO BE A COMPLETELY AIRTIGHT AND WATERTIGHT ENCLOSURE. DAMAGED POLYETHYLENE TUBING SHALL BE REPAIRED IN A WORKMANLIKE MANNER USING POLYETHYLENE TAPE, OR THE DAMAGED SECTION SHALL BE REPLACED. POLY WRAP WILL NOT BE PAID FOR AS A SEPARATE BID ITEM. IT SHALL BE CONSIDERED TO BE A PART OF THE PRICE BID FOR WATER MAINS.

7. FIRE HYDRANT BARRELS SHALL BE ENCASED IN POLY WRAP UP TO THE GROUND SURFACE AND THE WEEP HOLES SHALL NOT BE COVERED BY THE POLY WRAP.

8. GATE VALVES FOR USE WITH PIPE LESS THAN THREE INCHES (3") IN DIAMETER SHALL BE RATED FOR TWO HUNDRED (200) PSI WORKING PRESSURE, NON-SHOCK, BLOCK PATTERN, SCREWED BONNET, NON-RISING STEM, BRASS BODY, AND SOLID WEDGE. THEY SHALL BE STANDARD THREADED FOR PVC PIPE AND HAVE A MALLEABLE IRON HANDWHEEL. GATE VALVES 3" THROUGH 16" IN DIAMETER SHALL BE RESILIENT SEAT AND BIDIRECTIONAL FLOW ONLY. VALVES FOR SPECIAL APPLICATIONS WILL REQUIRE CITY UTILITY APPROVAL.

9. VALVE BOXES AND COVERS FOR ALL SIZE VALVES SHALL BE OF CAST IRON CONSTRUCTION AND ADJUSTABLE SCREW-ON TYPE. THE LID SHALL HAVE CAST IN THE METAL THE WORD "WATER" FOR THE WATER LINES. ALL VALVE BOXES SHALL BE SIX INCH (6") NOMINAL DIAMETER AND SHALL BE SUITABLE FOR DEPTHS OF THE PARTICULAR VALVE. THE STEM OF THE BURIED VALVE SHALL BE WITHIN TWENTY-FOUR INCHES (24") OF THE FINISHED GRADE UNLESS OTHERWISE APPROVED BY THE CITY.

10. ALL WATER MAIN INSTALLATIONS SHALL COMPLY WITH THE COLOR CODING REQUIREMENTS OF CHAPTER 62-555.320 F.A.C.

CITY OF HOLLYWOOD, FLORIDA — DIAMOND OF THE GOLD COAST — INCORPORATED 1925	ISSUED: 03/01/1994	DEPARTMENT OF PUBLIC UTILITIES STANDARD DETAIL	REVISED: 06/08/2014
	DRAWN: EAM	WATER SYSTEM NOTES	DRAWING NO. W-01
	APPROVED: XXX		

WATER SYSTEM NOTES (CONTINUED):

11. ALL WATER MAIN INSTALLATIONS SHALL COMPLY WITH THE COLOR CODING REQUIREMENTS OF CHAPTER 62-555.320 F.A.C.

12. ALL PVC PIPE SHALL CONFORM TO THE REQUIREMENTS OF ANSI/AWWA C900 LATEST REVISION AND CLASS DR 18. ALL DIP WATER MAINS SHALL BE DUCTILE IRON PRESSURE CLASS 350, WITH WALL THICKNESS COMPLYING WITH CLASS 52. ALL DUCTILE IRON PIPE SHALL CONFORM TO THE REQUIREMENTS OF ANSI/AWWA C151/A21.51-02 AND BE CEMENT LINED AND SEAL COATED PER ANSI/AWWA C104/A21.4-03.

13. FITTINGS SHALL BE DUCTILE IRON, MEETING ANSI/AWWA C153/A21.53-00 SPECIFICATIONS, WITH 350 PSI MINIMUM WORKING PRESSURE. FITTINGS MUST BE CEMENT LINED AND SEAL COATED PER ANSI/AWWA C104/A21.4-03. ALL DUCTILE IRON PIPE AND FITTINGS MUST BE MANUFACTURED IN THE UNITED STATES OF AMERICA.

14. ALL DUCTILE IRON PIPE TO BE MECHANICAL JOINTS, WRAPPED IN POLY. ADEQUATE PROTECTIVE MEASURES AGAINST CORROSION SHALL BE USED AS DETERMINED BY DESIGN.

15. PAVEMENT RESTORATION SHALL BE CARRIED OUT IN ACCORDANCE WITH THE REQUIREMENTS OF THE CITY.

16. ALL TRENCHING, PIPE LAYING, BACKFILL, PRESSURE TESTING, AND DISINFECTING MUST COMPLY WITH THE CITY OF HOLLYWOOD SPECIFICATIONS.

17. THE MINIMUM DEPTH OF COVER OVER WATER MAINS IS 30" (DIP) OR 36" (PVC).

18. MINIMUM HORIZONTAL SEPARATION BETWEEN STORM STRUCTURES AND WATER MAINS SHALL BE 3'.

19. MAXIMUM DEFLECTION PER EACH JOINT SHALL BE 50% OF MANUFACTURES RECOMMENDATION (MAXIMUM) WHERE DEFLECTION IS REQUIRED.

20. CONTRACTOR SHALL BE RESPONSIBLE FOR IDENTIFYING CONFLICTS WITH WATER MAINS PLACED AT MINIMUM COVER. IN CASE OF CONFLICT, WATER MAIN SHALL BE LOWERED TO PASS UNDER CONFLICTS WITH 18" MINIMUM VERTICAL SEPARATION. NO ADDITIONAL PAYMENT SHALL BE DUE TO CONTRACTOR FOR LOWERING THE MAIN OR THE ADDITIONAL FITTINGS USED THEREON.

21. PIPE JOINT RESTRAINT SHALL BE PROVIDED BY THE USE OF DUCTILE IRON FOLLOWER GLANDS MANUFACTURED TO ASTM A 536-80. TWIST-OFF NUTS SHALL BE USED TO ENSURE PROPER ACTUATING OF THE RESTRAINING DEVICES. THE MECHANICAL JOINT RESTRAINING DEVICES SHALL HAVE A WORKING PRESSURE OF 250 PSI MINIMUM, WITH A MINIMUM SAFETY FACTOR OF 2:1, AND SHALL BE EBAA IRON INC., MEGALUG OR APPROVED EQUAL. JOINT RESTRAINTS SHALL BE PROVIDED AT A MINIMUM OF THREE JOINTS (60 FEET) FROM ANY FITTING.

22. WHENEVER IT IS NECESSARY, IN THE INTEREST OF SAFETY, TO BRACE THE SIDES OF A TRENCH, THE CONTRACTOR SHALL FURNISH, PUT IN PLACE AND MAINTAIN SUCH SHEETING OR BRACING AS MAY BE NECESSARY TO SUPPORT THE SIDES OF THE EXCAVATION TO ENSURE PERSONNEL SAFETY, AND TO PREVENT MOVEMENT WHICH CAN IN ANY WAY DAMAGE THE WORK OR ENDANGER ADJACENT STRUCTURES. THE CONTRACTOR SHALL BE SOLELY RESPONSIBLE FOR THE SEQUENCE, METHODS AND MEANS OF CONSTRUCTION, AND FOR THE IMPLEMENTATION OF ALL OSHA AND OTHER SAFETY REQUIREMENTS.

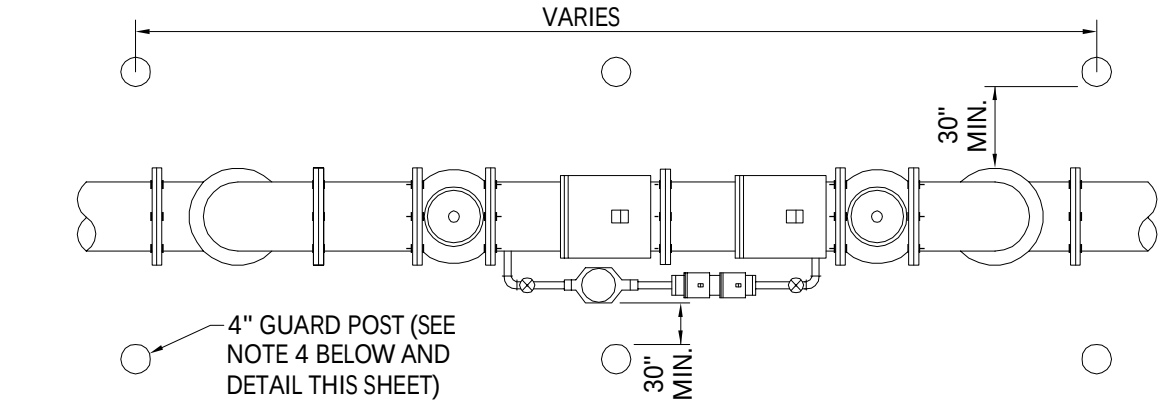

PLAN

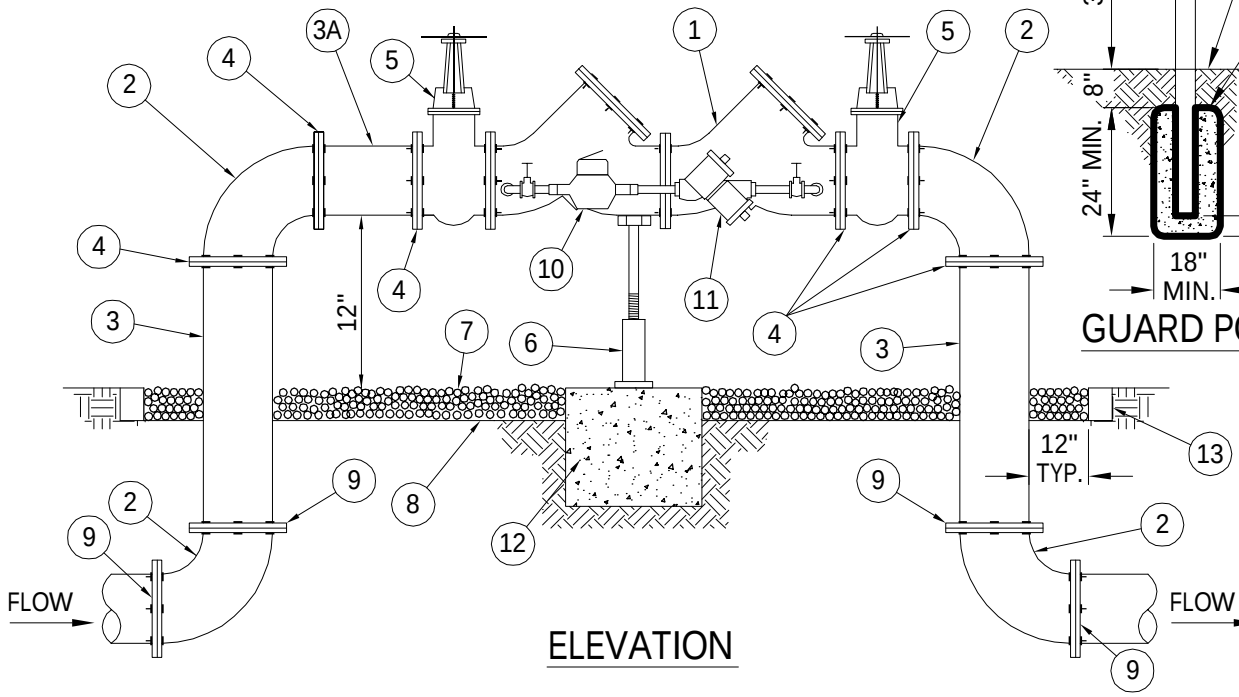

ELEVATION

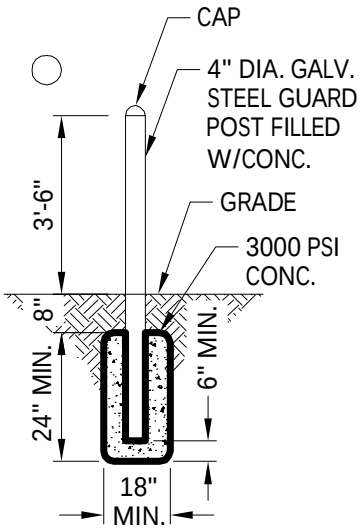

GUARD POST

MATERIALS					
ITEM	QTY.	DESCRIPTION	ITEM	QTY.	DESCRIPTION
1	1	4",6",8" VALVE,DOUBLE CHECK	7	N/A	PEA GRAVEL (4" DEEP)
2	4	4",6",8" BEND-90°	8	N/A	PLASTIC LINER/WEED STOP (5 MILS)
3	2	4",6",8" D.I.P. SPOOL PIECE	9	4	RESTRAINED JOINTS
3A	1	4",6",8" D.I.P. SPOOL PIECE (24" LONG)	10	1	LOW FLOW METER
4	7	4",6",8" FLANGE, D.I.P.	11	1	VALVE, BYPASS DOUBLE CHECK
5	2	4",6",8" GATE VALVE (SEE NOTE 6)	12	1	16"X16"X16" CONC. SUPPORT
6	1	SCREW JACK/ANCHORED	13	1	P.T. 2X4 LUMBER ALL AROUND

NOTES:

1. FIELD ADJUST AND CUT ITEM 3 TO THE PROPER LENGTH.
2. ALL PIPING SHALL BE D.I.P. CL 50/52 AS APPLICABLE TO MINIMUM STANDARDS.
3. ALL LOW FLOW METER PIPING SHALL BE BRASS OR COPPER.
4. PROTECTIVE 4" GALV. GUARD POSTS SHALL BE SPACED EVENLY APART AS SHOWN ABOVE OR IN ACCORDANCE WITH INSPECTOR'S DIRECTIONS.
5. MAY USE 45° BENDS (SEE DETAIL W-07.2) WHEN WORKING AREA IS NOT LIMITED, AS DIRECTED BY CITY.
6. GATE VALVES SHALL BE CHAINED AND LOCKED TOGETHER TO PREVENT TAMPERING.

CITY OF HOLLYWOOD, FLORIDA — DIAMOND OF THE GOLD COAST — INCORPORATED 1925	ISSUED: 03/01/1994	DEPARTMENT OF PUBLIC UTILITIES STANDARD DETAIL	REVISED: 06/08/2014
	DRAWN: EAM	TYPICAL 4", 6" AND 8" DOUBLE CHECK DETECTOR ASSEMBLY FOR FIRE SPRINKLER SERVICE (90° BENDS)	DRAWING NO. W-03
	APPROVED: XXX		

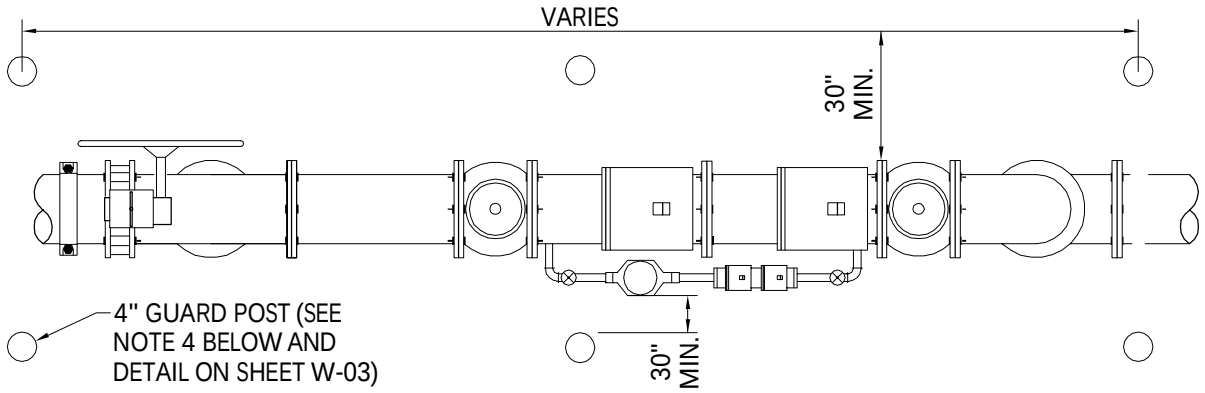

PLAN

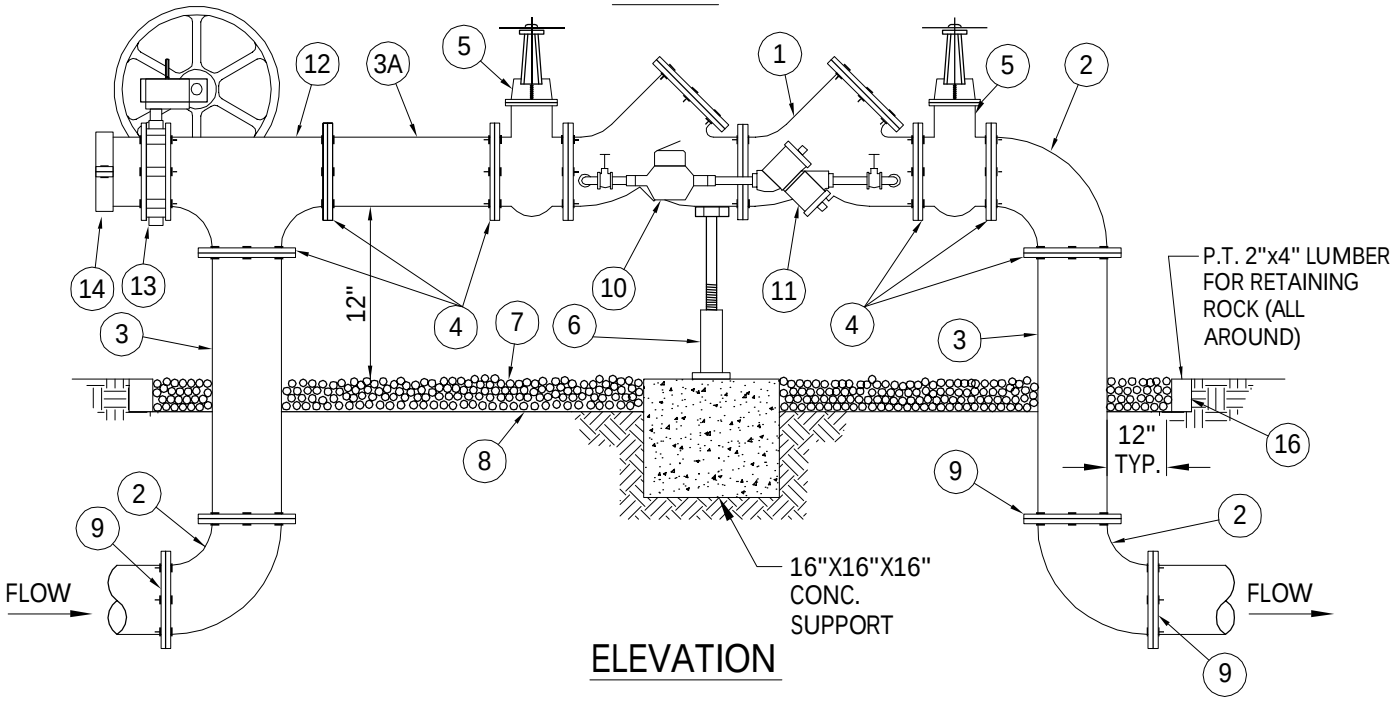

ELEVATION

MATERIALS					
ITEM	QTY.	DESCRIPTION	ITEM	QTY.	DESCRIPTION
1	1	4",6",8" VALVE,DOUBLE CHECK	8	N/A	PLASTIC LINER/WEED STOP (5 MILS)
2	4	4",6",8" BEND-90°	9	4	RESTRAINED JOINTS
3	2	4",6",8" D.I.P. SPOOL PIECE	10	1	LOW FLOW METER
3A	1	4",6",8" D.I.P. SPOOL PIECE(24" LONG)	11	1	VALVE, BYPASS DOUBLE CHECK
4	10	4",6",8" FLANGE, D.I.P.	12	1	4", 6", 8" TEE
5	2	4",6",8" GATE VALVE (SEE NOTE 6)	13	1	4", 6" 8" BUTTERFLY VALVE (SUPERVISED CLOSED), CHAINED AND LOCKED
6	1	SCREW JACK/ANCHORED			
7	N/A	PEA GRAVEL (4" DEEP)	14	1	4", 6", 8" CAP

NOTES:

1. FIELD ADJUST AND CUT ITEM 3 TO THE PROPER LENGTH.
2. ALL PIPING SHALL BE D.I.P. CL 50/52 AS APPLICABLE TO MINIMUM STANDARDS.
3. ALL LOW FLOW METER PIPING SHALL BE BRASS OR COPPER.
4. PROTECTIVE 4" GALV. GUARD POSTS SHALL BE SPACED EVENLY APART AS SHOWN ABOVE OR IN ACCORDANCE WITH INSPECTOR'S DIRECTIONS.
5. MAY USE 45° BENDS (SEE DETAIL W-05) WHEN WORKING AREA IS NOT LIMITED, AS DIRECTED BY CITY.
6. GATE VALVES SHALL BE CHAINED AND LOCKED TOGETHER TO PREVENT TAMPERING

CITY OF HOLLYWOOD, FLORIDA — DIAMOND OF THE GOLD COAST — INCORPORATED 1925	ISSUED: 03/01/1994	DEPARTMENT OF PUBLIC UTILITIES STANDARD DETAIL	REVISED: 06/08/2014
	DRAWN: EAM	TYPICAL 4", 6" AND 8" DOUBLE CHECK DETECTOR FOR FIRE SPRINKLER SERVICE W/B.V. CONNECTION (90° BENDS)	DRAWING NO. W-04
	APPROVED: XXX		

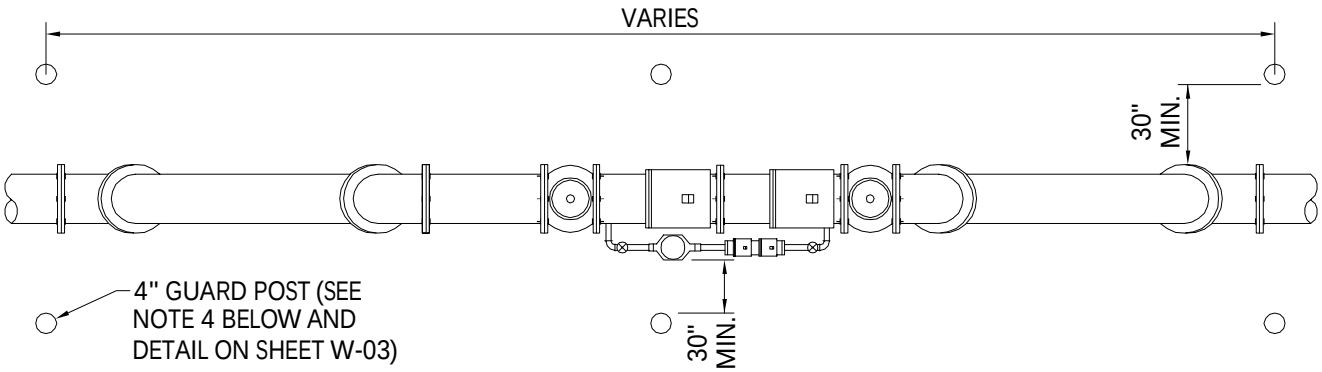

PLAN

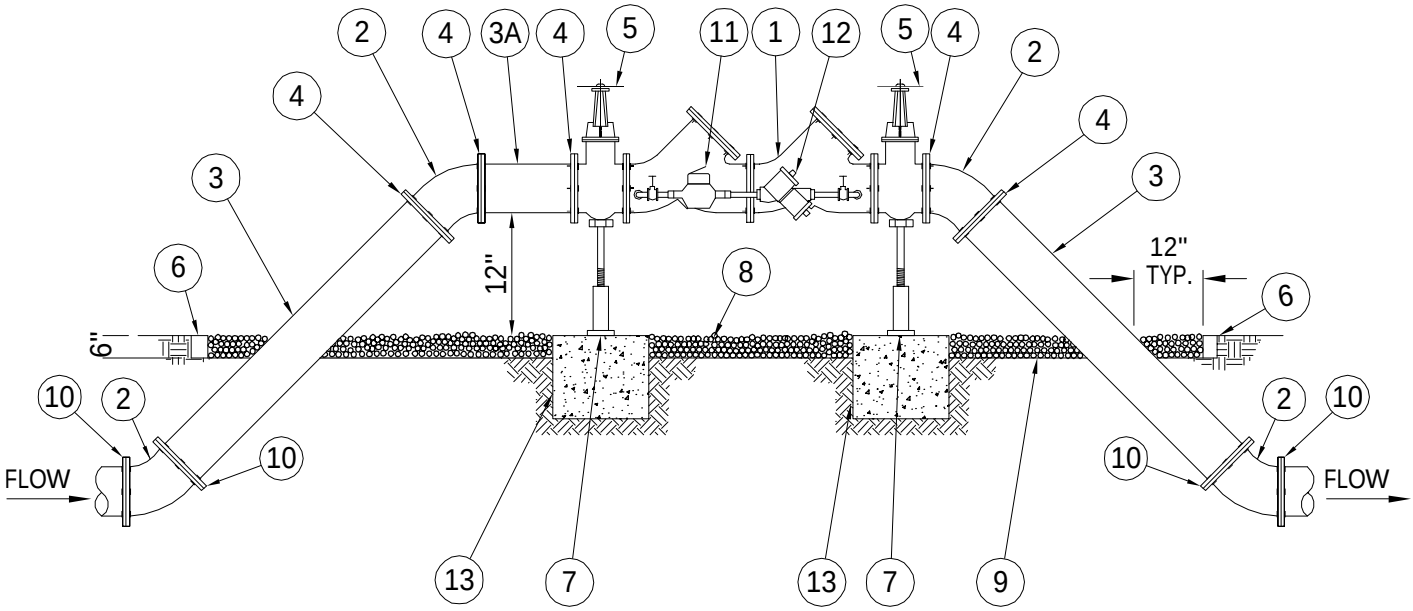

ELEVATION

MATERIALS					
ITEM	QTY.	DESCRIPTION	ITEM	QTY.	DESCRIPTION
1	1	4",6",8" VALVE,DOUBLE CHECK	7	2	SCREW JACK/ANCHORED
2	4	4",6",8" BEND-45°	8	N/A	PEA GRAVEL (4" DEEP)
3	2	4",6",8" D.I.P. SPOOL PIECE	9	N/A	PLASTIC LINER/WEED STOP (5 MILS)
3A	1	4",6",8" D.I.P. SPOOL PIECE(24" LONG)	10	4	RESTRAINED JOINTS
4	7	4",6",8" FLANGE, D.I.P.	11	1	LOW FLOW METER
5	2	4",6",8" GATE VALVE (SEE NOTE 6)	12	1	VALVE, BYPASS DOUBLE CHECK
6	2	P.T. 2"x4" LUMBER (ALL AROUND)	13	1	16"x16"x16" CONC. SUPPORT

NOTES:

1. FIELD ADJUST AND CUT ITEM 3 TO THE PROPER LENGTH.
2. ALL PIPING SHALL BE D.I.P. CL 50/52 AS APPLICABLE TO MINIMUM STANDARDS.
3. ALL LOW FLOW METER PIPING SHALL BE BRASS OR COPPER.
4. PROTECTIVE 4" GALV. GUARD POSTS SHALL BE SPACED EVENLY APART AS SHOWN ABOVE OR IN ACCORDANCE WITH INSPECTOR'S DIRECTIONS.
5. MAY USE 90° BENDS (SEE DETAIL W-03) WHEN WORKING AREA IS LIMITED.
6. GATE VALVES SHALL BE CHAINED AND LOCKED TOGETHER TO PREVENT TAMPERING.

CITY OF HOLLYWOOD, FLORIDA — DIAMOND OF THE GOLD COAST — INCORPORATED 1925	ISSUED: 03/01/1994	DEPARTMENT OF PUBLIC UTILITIES STANDARD DETAIL	REVISED: 06/08/2014
	DRAWN: EAM	TYPICAL 4", 6" AND 8" DOUBLE CHECK DETECTOR ASSEMBLY FOR FIRE SPRINKLER SERVICE (45° BENDS)	DRAWING NO. W-05
	APPROVED: XXX		

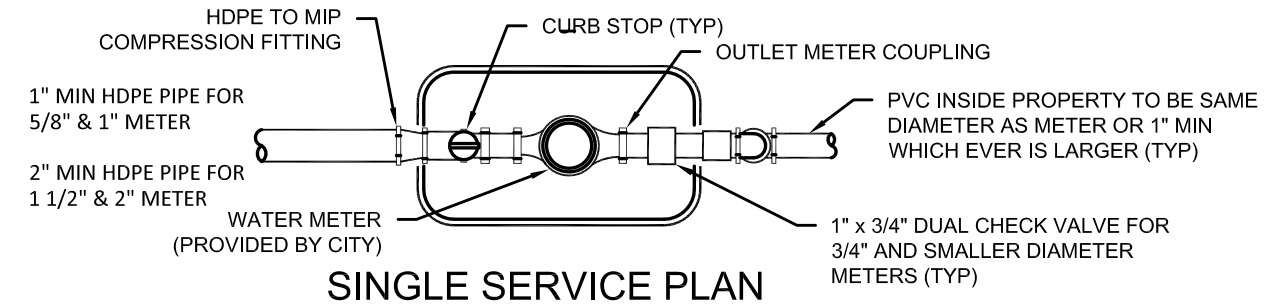

SINGLE SERVICE PLAN
FOR 5/8", 1", 1-1/2" & 2" METERS

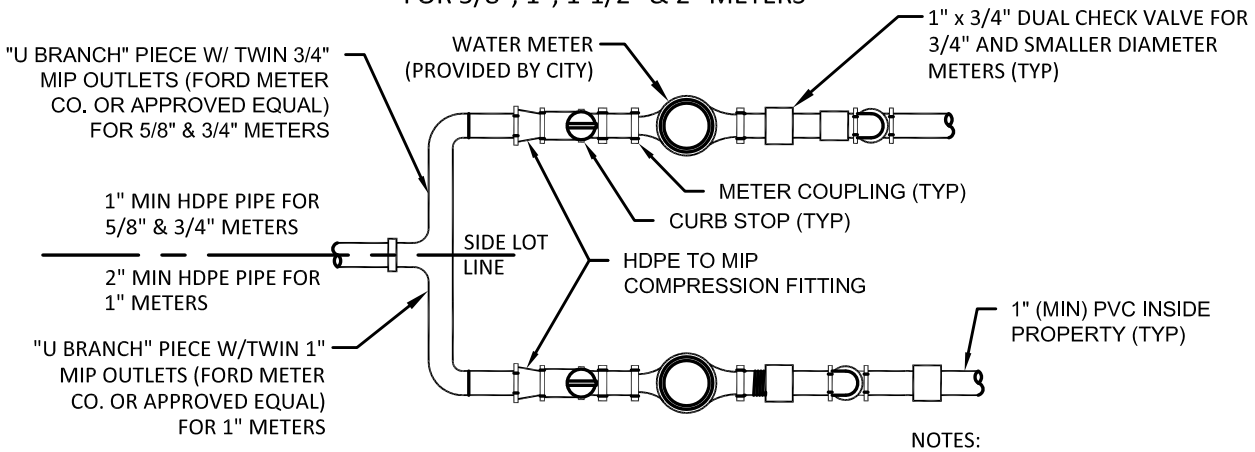

DOUBLE SERVICE PLAN
FOR 5/8", 3/4" AND 1" METERS

NOTES:
1. USE ONE SINGLE METER BOX PER METER OR ONE DUAL METER BOX FOR TWO METERS.
2. 5/8" METERS REQUIRE 3/4" PIPING.
3. 1" METERS REQUIRE 1" PIPING.
4. ALL PIPING TO BE HDPE.
5. ALL FITTINGS TO BE BRASS.

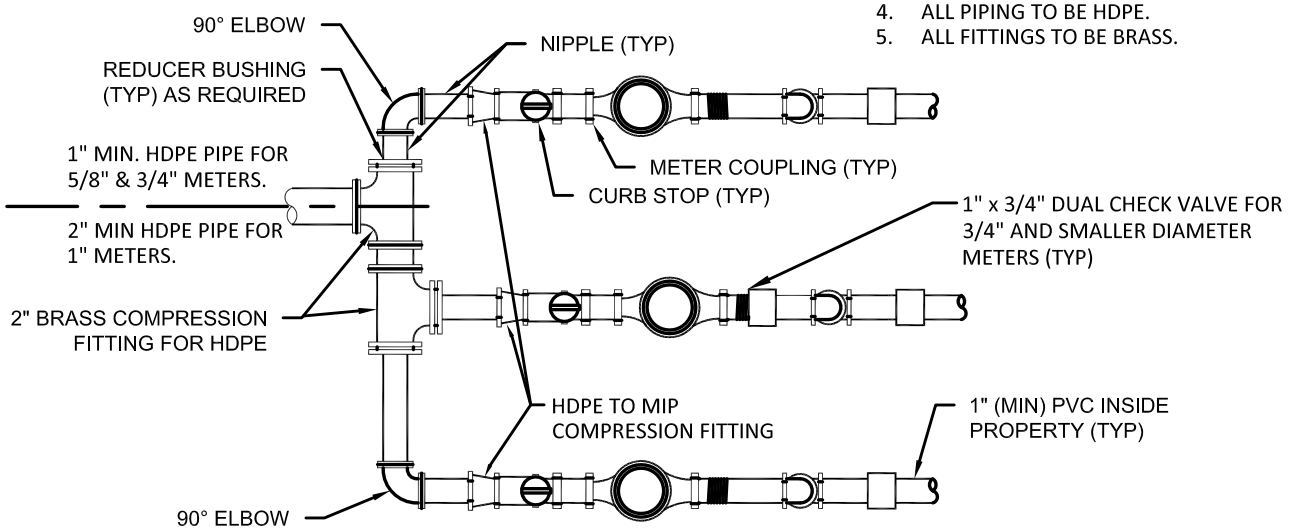

TRIPLE SERVICE PLAN
FOR 5/8", 3/4" AND 1" METERS

NOTES:
1. USE ONE METER BOX PER METER.
2. 5/8" METERS REQUIRE 3/4" PIPING.
3. 1" METERS REQUIRE 1" PIPING.
4. ALL FITTINGS TO BE BRASS.

NO GALVANIZED PIPE OR FITTINGS ALLOWED

CITY OF HOLLYWOOD, FLORIDA — DIAMOND OF THE GOLD COAST — INCORPORATED 1925	ISSUED: 03/01/1994	DEPARTMENT OF PUBLIC UTILITIES STANDARD DETAIL	REVISED: 11/06/2017
	DRAWN: EAM	TYPICAL 5/8", 1", 1-1/2" AND 2" METER INSTALLATION	DRAWING NO. W-06
	APPROVED: XXX		

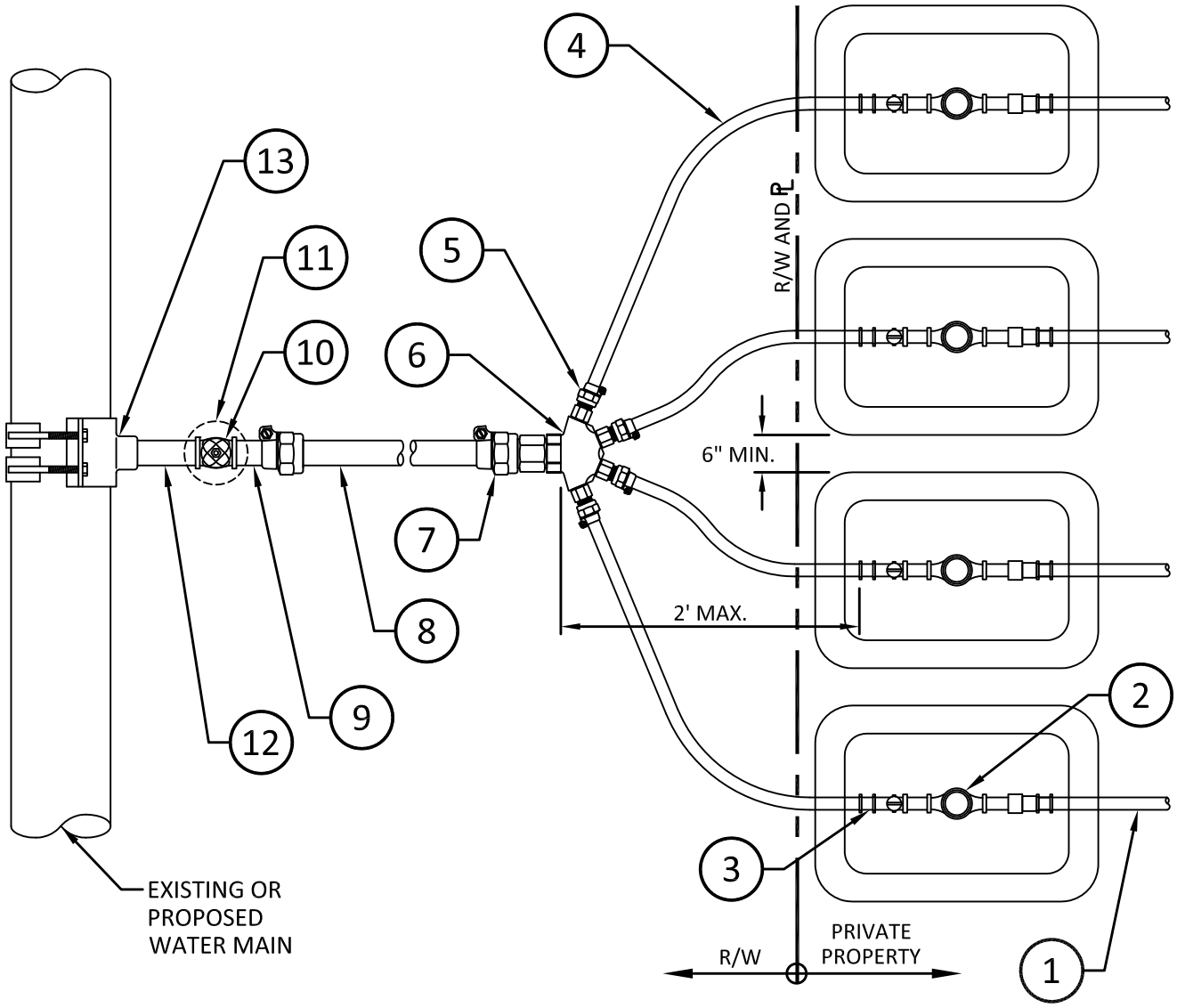

1. PROPERTY OWNER'S SERVICE PIPE
2. ⅝", ¾" OR 1" METER INSTALLATION (REFER TO "SINGLE SERVICE PLAN" ON STANDARD DETAIL W-06) (TYP. FOR 4)
3. COUPLING W/1" COMPRESSION FOR HDPE X ¾" MIP
4. 1" HDPE SERVICE PIPE TO METER (TYP. FOR 4)
5. COUPLING W/1" MIP X 1" COMPRESSION FOR HDPE (TYP. FOR 4)
6. MULTI-SERVICE "Y" W/SINGLE 2" FIP INLET AND (4)-1" FIP OUTLETS (MULTI SERVICE BRASS Y)
7. COUPLING WITH 2" COMPRESSION FOR HDPE X 2" MIP
8. 2" HDPE WATER SERVICE PIPE
9. COUPLING W/2" BRASS THREAD x 2" COMPRESSION FOR HDPE
10. PROP. 2" GATE VALVE W/2" OPERATING WHEEL
11. PROP. VALVE BOX W/LID AND RISER. FOR UNPAVED AREAS, INSTALL 24"x24"x8" THICK CONC. COLLAR
12. PROPOSED 2" BRASS NIPPLE
13. PROP. DOUBLE STRAP SERVICE SADDLE FOR D.I.P. OR BAND SADDLE FOR PVC
14. ALL FITTINGS TO BE BRASS.

CITY OF HOLLYWOOD, FLORIDA — DIAMOND OF THE GOLD COAST — INCORPORATED 1925	ISSUED: 03/01/1994	DEPARTMENT OF PUBLIC UTILITIES STANDARD DETAIL	REVISED: 11/06/2017
	DRAWN: EAM	METER BANK INSTALLATION FOR FOUR ⅝", ¾" AND/OR 1" METERS	DRAWING NO. W-06.1
	APPROVED: XXX		

WATER METER SERVICE NOTES:

1. SUCCESSIVE TAPS INTO THE WATER MAIN SHALL BE SPACED NOT LESS THAN 18" ON CENTER.
2. P.E. TUBING SHALL BE IN ACCORDANCE WITH THE LATEST EDITION OF AWWA STANDARD C901, "POLYETHYLENE (PE) PRESSURE PIPE AND TUBING, 1/2 IN. (13mm) THROUGH 3 IN. (76 mm), FOR WATER SERVICE".
3. MINIMUM SERVICE PIPE DIAMETER SHALL BE 1" FOR SINGLE OR DUAL ⅝" OR SINGLE 1" DIAMETER METERS.
4. MINIMUM SERVICE PIPE DIAMETER SHALL BE 2" FOR SINGLE OR DUAL 1-½" OR SINGLE 2" DIAMETER METERS.
5. FOR METER DIAMETERS LARGER THAN 2", THE MINIMUM SERVICE PIPE DIAMETER SHALL BE THE SAME AS THE METER DIAMETER.
6. APPROVED COPPER TUBING MAY BE USED AT THE CITY'S DISCRETION.
7. FOR NEW METER INSTALLATIONS, ALL SADDLES, VALVES, PIPING, FITTINGS,CURB STOPS, METER VALVES, METER COUPLINGS, METER VAULTS AND COVERS SHALL BE FURNISHED AND INSTALLED BY THE CONTRACTOR. THE WATER METERS WILL BE PROVIDED AND INSTALLED BY THE CITY OF HOLLYWOOD (NEW ACCOUNTS).
8. FOR METER RELOCATIONS, ALL SADDLES, VALVES, PIPING, FITTINGS, CURB STOPS, METER VALVES, METER COUPLINGS, METER VAULTS AND COVERS SHALL BE FURNISHED AND INSTALLED BY THE CONTRACTOR. THE EXISTING WATER METER TO BE RELOCATED AND INSTALLED BY CONTRACTOR.
9. FOR EXISTING METERS ABUTTING THE RIGHT-OF-WAY THAT ARE BEING DISCONNECTED FROM EXISTING MAINS AND RECONNECTED TO NEW MAINS, THE CONTRACTOR SHALL:
   a. CUT AND PLUG THE EXISTING SERVICE LINE AT THE MAIN AND AT THE METER, AND REMOVE THE EXISTING BALL VALVE CURB STOP.
   b. FURNISH AND INSTALL SERVICE SADDLE, CORPORATION STOP OR SERVICE VALVE AND VALVE BOX, PIPING AND FITTINGS UP TO AND INCLUDING THE BALL VALVE CURB STOP.
12. THE ELEVATION AT THE TOP OF THE METER BOX SHALL MATCH THE ELEVATION OF THE BACK OF SIDEWALK, WHENEVER PRACTICAL.
13. AS PART OF THE SERVICE INSTALLATION, THE CONTRACTOR SHALL RESTORE THE RIGHT-OF-WAY TO MATCH EXISTING CONDITIONS, INCLUDING ROADWAY PAVEMENT, PAVEMENT MARKINGS AND RPMs, CONCRETE CURBS, SIDEWALKS, RAMPS (INCLUDING DETECTABLE WARNING SURFACE), SODDING, AND ALL OTHER IMPROVEMENTS REMOVED OR DAMAGED DURING THE SERVICE INSTALLATION.
14. FOR UNPAVED AREAS, THE MINIMUM GROUND COVER ACCEPTED BY THE CITY IS SODDING.

CITY OF HOLLYWOOD, FLORIDA — DIAMOND OF THE GOLD COAST — INCORPORATED 1925	ISSUED: 03/01/1994	DEPARTMENT OF PUBLIC UTILITIES STANDARD DETAIL	REVISED: 11/06/2017
	DRAWN: EAM	WATER METER SERVICE NOTES FOR 5/8" THROUGH 2" METERS	DRAWING NO. W-07
	APPROVED: XXX		

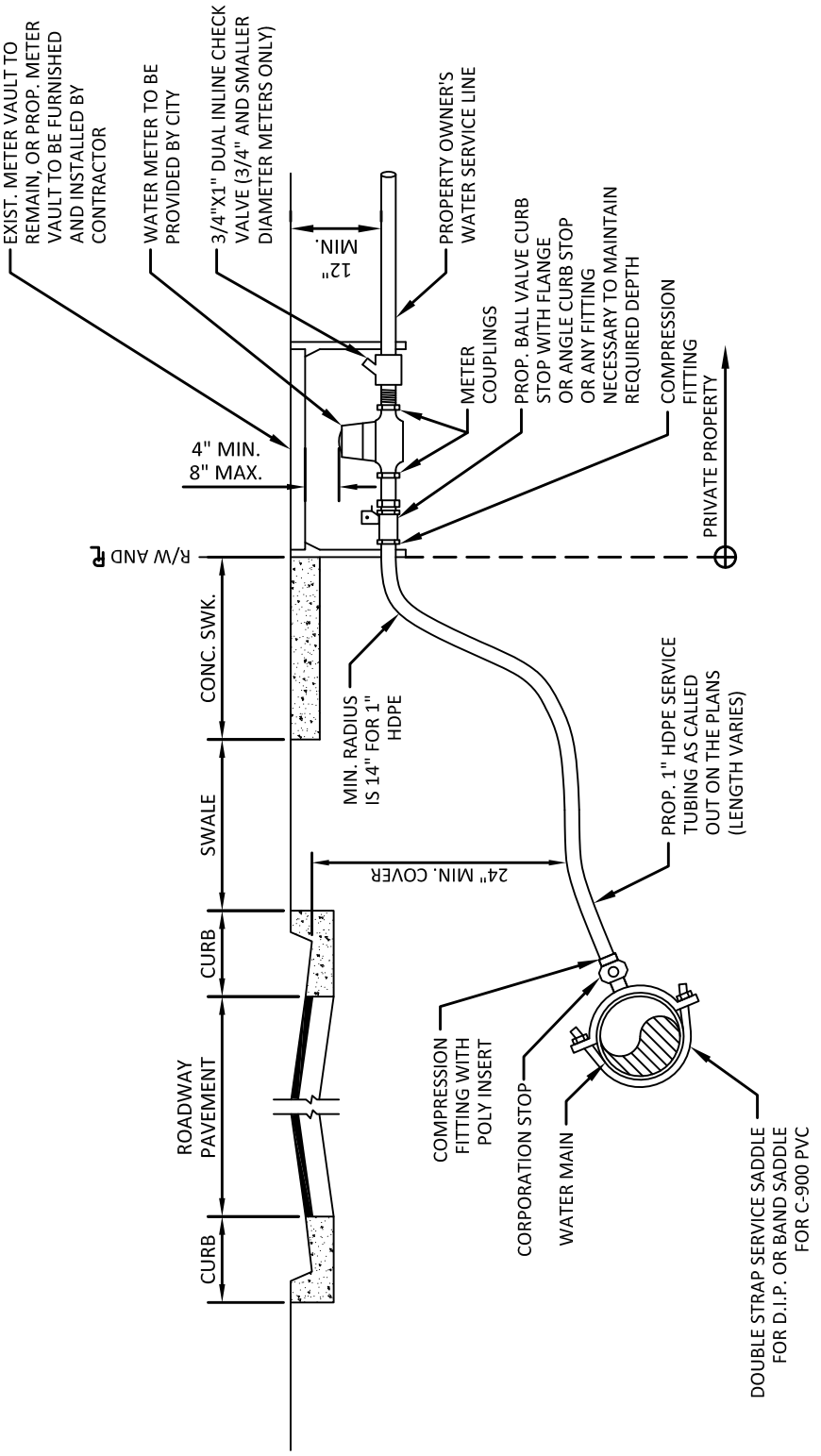

CITY OF HOLLYWOOD, FLORIDA — DIAMOND OF THE GOLD COAST — INCORPORATED 1925	ISSUED: 03/01/1994	DEPARTMENT OF PUBLIC UTILITIES STANDARD DETAIL	REVISED: 11/06/2017
	DRAWN: EAM	TYPICAL 1" HDPE WATER SERVICE FOR SINGLE/DUAL 5/8" TO 1" METERS	DRAWING NO. W-08
	APPROVED: XXX		

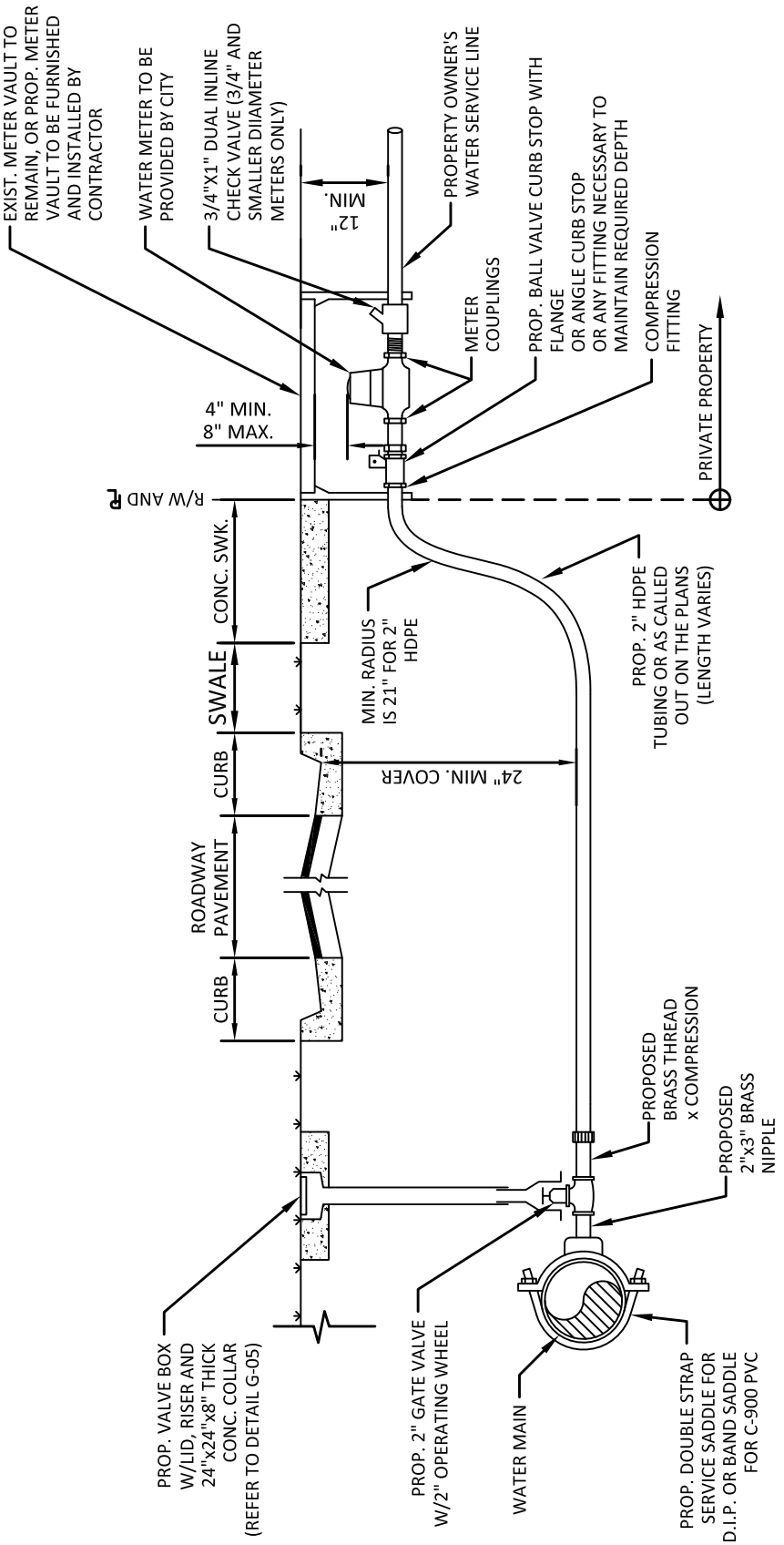

CITY OF HOLLYWOOD, FLORIDA — DIAMOND OF THE GOLD COAST — INCORPORATED 1925	ISSUED: 03/01/1994	DEPARTMENT OF PUBLIC UTILITIES STANDARD DETAIL	REVISED: 11/06/2017
	DRAWN: EAM	TYPICAL 2-INCH HDPE WATER SERVICE FOR SINGLE/DUAL 5/8" TO 1" METERS, AND ANY SINGLE 1-1/2" TO 2" METERS	DRAWING NO. W-09
	APPROVED: XXX		

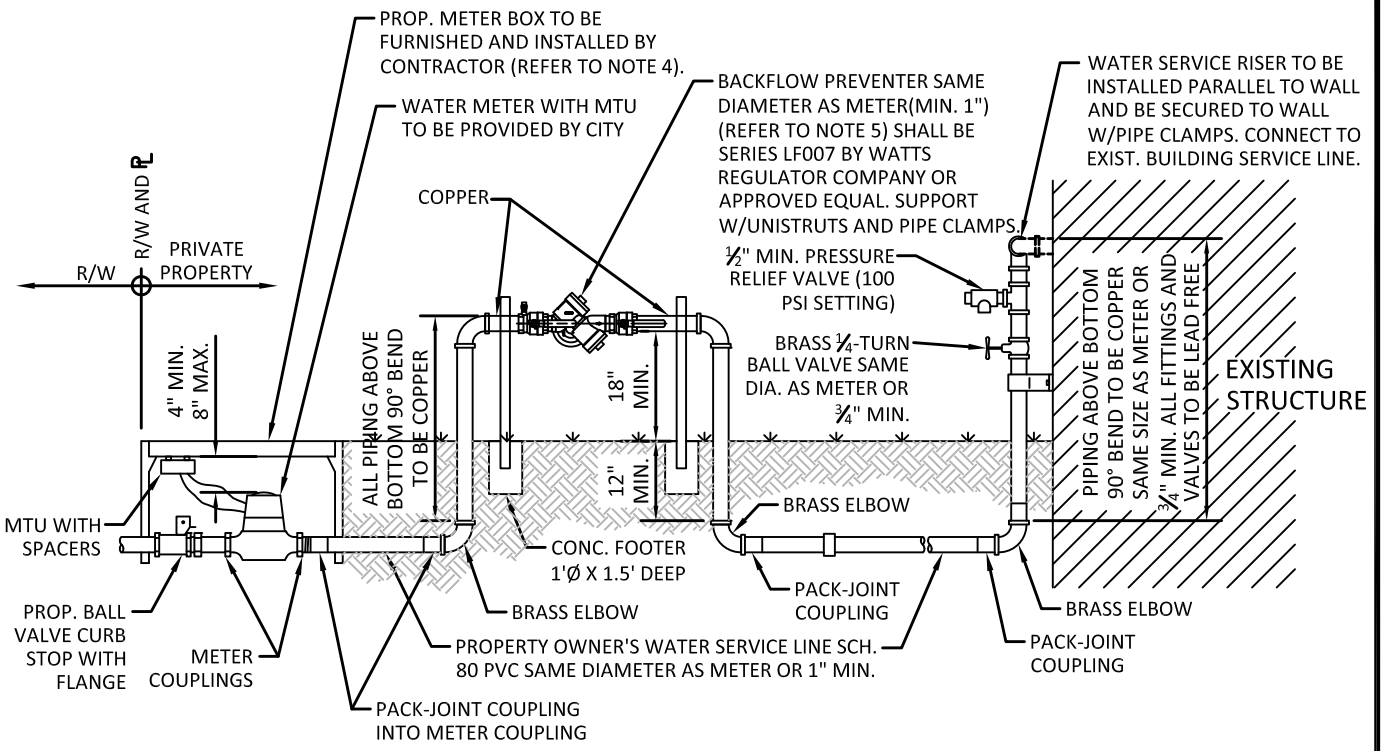

FOR 1", 1-1/2" & 2" RESIDENTIAL METERS, AND FOR ALL COMMERCIAL PROPERTIES REGARDLESS OF METER DIAMETER

SCALE: N.T.S.

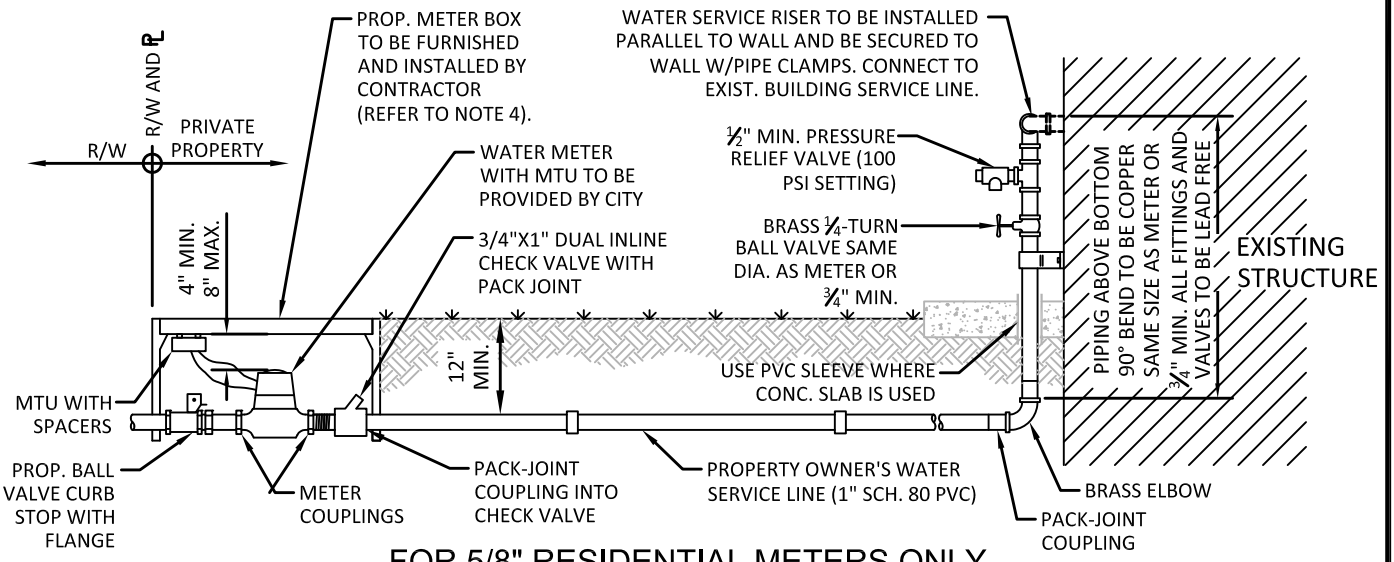

FOR 5/8" RESIDENTIAL METERS ONLY

SCALE: N.T.S.

NOTES FOR ALL SERVICES:

1. IF EXISTING HOSE BIB IS REMOVED, DAMAGED, OR NO HOSE BIB EXISTS, ONE MUST BE INSTALLED: A HOSE BIB VACUUM BREAKER MUST BE INSTALLED AS REQUIRED TO COMPLY WITH THE LATEST REVISION OF THE FLORIDA BUILDING CODE.
2. THREADED PVC FITTINGS (MALE OR FEMALE) NOT ALLOWED. ALL TRANSITIONS FROM PVC TO METAL PIPING/FITTINGS SHALL USE COMPRESSION PACK-JOINT COUPLINGS. THIS INCLUDES PVC CONNECTIONS TO INLINE CHECK VALVE AND BACKFLOW PREVENTER.
3. PIPE CLAMPS FOR ATTACHING WATER SERVICE RISER TO WALL SHALL BE HOT-DIPPED GALVANIZED, WITH ISOLATION MATERIAL BETWEEN THE PIPE AND GALVANIZED METAL.
4. IF EXISTING CONCRETE METER BOX IS IN ACCEPTABLE CONDITION (AS DETERMINED BY ECSD) IT MAY BE RE-USED.
5. IF EXISTING BACKFLOW PREVENTER IS DETERMINED TO BE IN ACCEPTABLE CONDITION IT MAY BE RE-USED PROVIDED IT IS RE-CERTIFIED.
6. ALL PRIVATE SERVICE LINE INSTALLATIONS SHALL COMPLY WITH THE LATEST REVISION OF THE FLORIDA BUILDING CODE.
7. ALL FITTINGS TO BE BRASS.

CITY OF HOLLYWOOD, FLORIDA — DIAMOND OF THE GOLD COAST — INCORPORATED 1925	ISSUED: 03/01/1994	DEPARTMENT OF PUBLIC UTILITIES STANDARD DETAIL	REVISED: 02/14/2018
	DRAWN: EAM	TYPICAL WATER SERVICE FROM METER TO STRUCTURE FOR 5/8" THROUGH 2" METERS	DRAWING NO. W-10
	APPROVED: XXX		

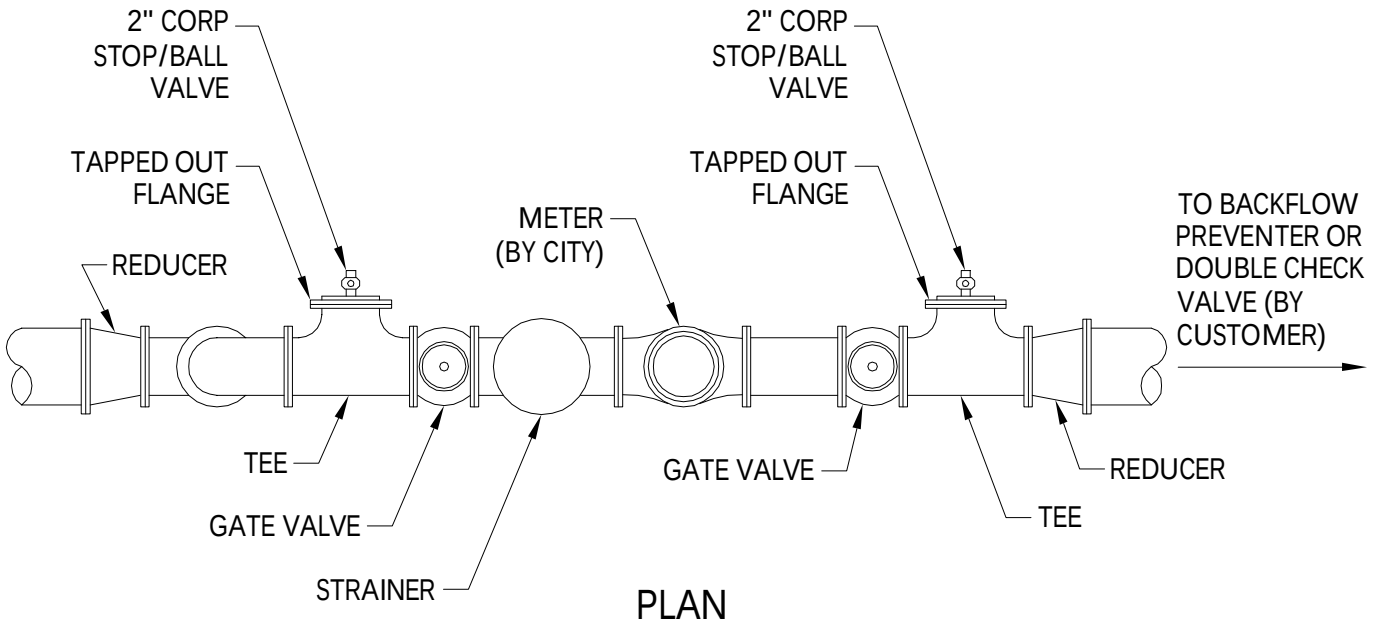

PLAN

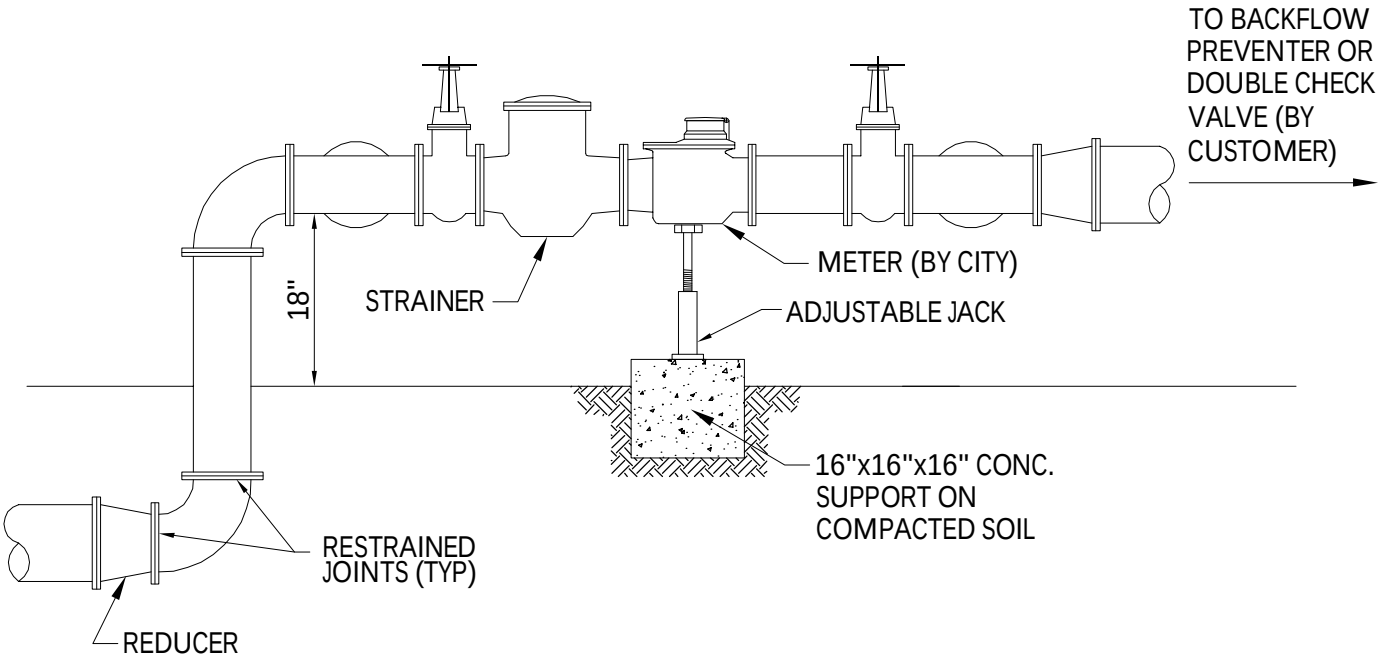

ELEVATION

NOTES:

1. THE WATER METER AND STRAINER IS PROVIDED BY THE CITY OF HOLLYWOOD.
2. THE CITY'S RESPONSIBILITY ENDS AT THE REDUCER PRECEDING THE BACKFLOW PREVENTER.
3. TAPPED OUT FLANGE SHOULD MATCH SIZE OF TEE AND STANDARD 2" CORP STOP OR BALL VALVE.

CITY OF HOLLYWOOD, FLORIDA — DIAMOND OF THE GOLD COAST — INCORPORATED 1925	ISSUED: 03/01/1994	DEPARTMENT OF PUBLIC UTILITIES STANDARD DETAIL	REVISED: 06/08/2014
	DRAWN: EAM	TYPICAL METER 3" DIAMETER AND LARGER	DRAWING NO. W-11
	APPROVED: XXX		

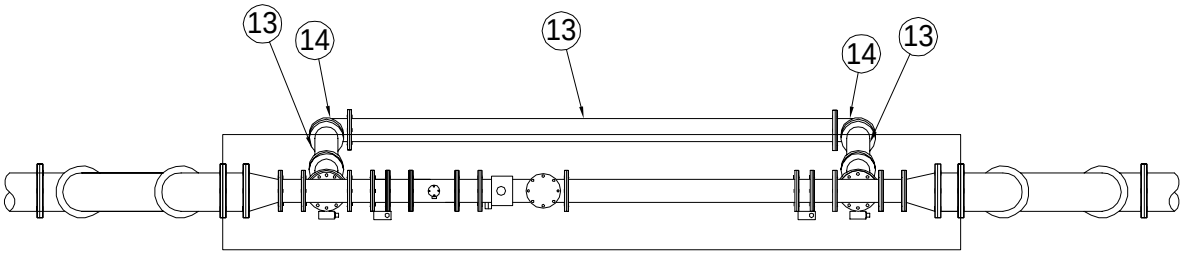

PLAN VIEW

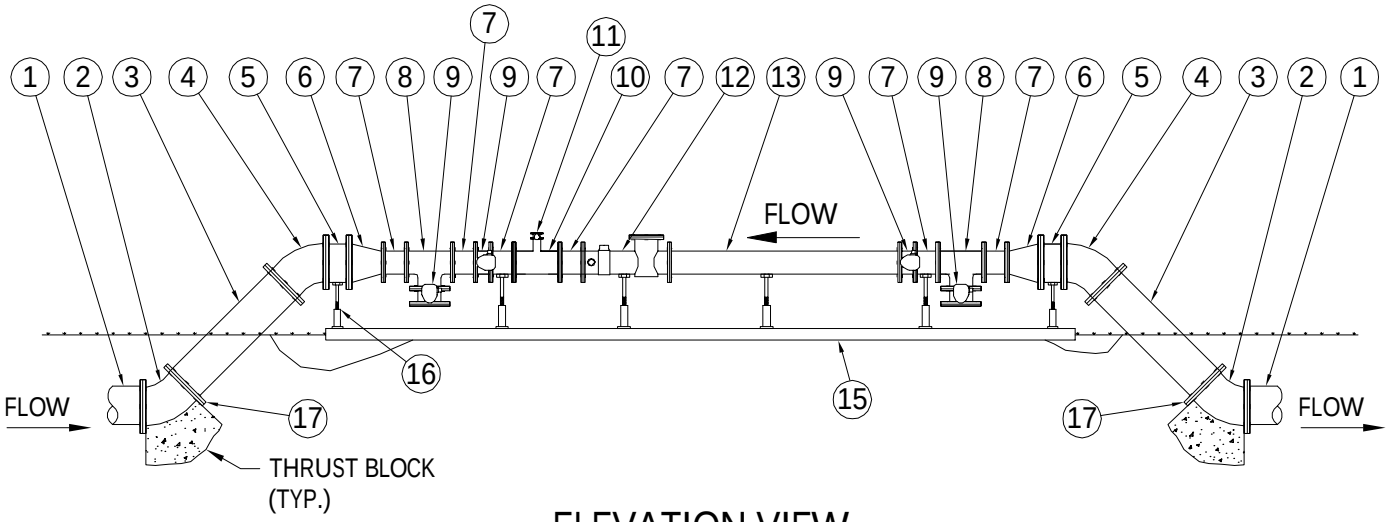

ELEVATION VIEW

MATERIALS					
ITEM	QTY.	DESCRIPTION	ITEM	QTY.	DESCRIPTION
1		20" D.I. PIPE	9	4	12" BUTTERFLY VALVE (FLG. x FLG.)
2	2	20" D.I.P. 45° BEND, M.J. x M.J., RESTRAINED	10	1	12" x 4" TEE (FLG. x FLG.)
3	2	20" D.I. SPOOL PIECE (P.E. x FLG.)	11	1	4" BUTTERFLY VALVE (FLG. x FLG.)
4	2	20" D.I.P. 45° BEND (FLG. x FLG.)	12	1	12" TURBINE METER
5	2	20" D.I. SPOOL PIECE (12" LONG) (FLG. x FLG.)	13	3	12" D.I. SPOOL PIECE (FLG. x FLG.)
6	2	20"x12" D.I.P. REDUCER (FLG. x FLG.)	14	2	12" D.I.P. 90° BEND (FLG. x FLG.)
7	6	12" D.I. SPOOL PIECE (12" LONG) (FLG. x FLG.)	15	1	3'W x 8" THICK CONC. SLAB W/#4 @ 12" O.C. E.W.
8	2	12" x 12" D.I.P. TEE (FLG. x FLG.) ROTATED DOWN 45°	16	6	SCREW JACK / ANCHORED

NOTES:

1. FIELD ADJUST AND CUT ITEM 3 TO THE PROPER LENGTH.
2. ALL PIPING SHALL BE D.I.P. CL 50/52 AS APPLICABLE TO MINIMUM STANDARDS.
3. USE 90° BENDS WHEN WORKING AREA IS LIMITED.
4. ADJUSTABLE PIPE SADDLE SUPPORTS SHALL BE SIZED TO FIT CURVATURE OF PIPE, WITH GALVANIZED STEEL PIPE AND FLOOR FLANGE. ATTACH FLOOR FLANGE TO CONCRETE SLAB WITH GALVANIZED EXPANSION BOLTS.

CITY OF HOLLYWOOD, FLORIDA — DIAMOND OF THE GOLD COAST — INCORPORATED 1925	ISSUED: 03/01/1994	DEPARTMENT OF PUBLIC UTILITIES STANDARD DETAIL	REVISED: 06/08/2014
	DRAWN: EAM	12" CLASS II TURBINE METER ASSEMBLY FOR 20" WATER MAIN	DRAWING NO. W-12
	APPROVED: XXX		

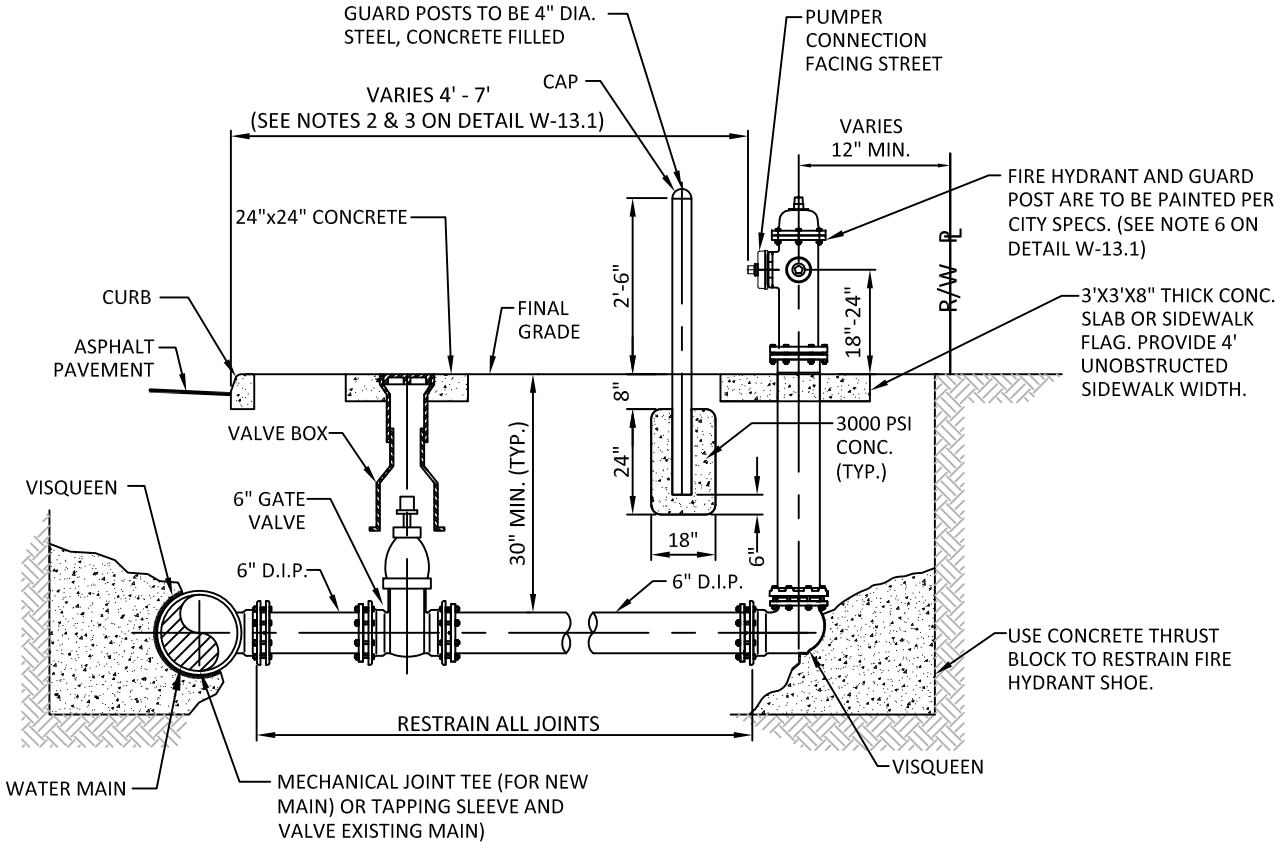

ELEVATION

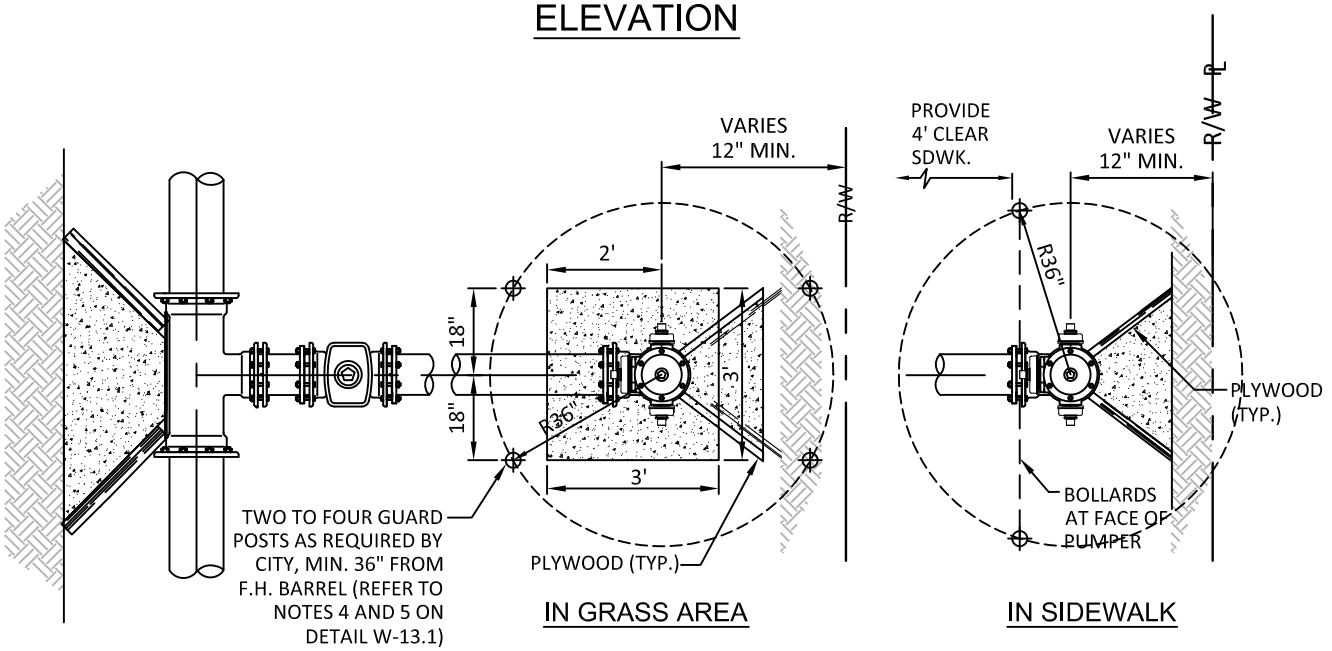

PLAN VIEW

CITY OF HOLLYWOOD, FLORIDA — DIAMOND OF THE GOLD COAST — INCORPORATED 1925	ISSUED: 03/01/1994	DEPARTMENT OF PUBLIC UTILITIES STANDARD DETAIL	REVISED: 03/05/2019
	DRAWN: EAM	TYPICAL FIRE HYDRANT INSTALLATION	DRAWING NO. W-13
	APPROVED: XXX		

NOTES:

1. IN ALL CASES, PROVIDE 4' UNOBSTRUCTED SIDEWALK CLEAR OF THE FIRE HYDRANT AND BOLLARDS.
2. FIRE HYDRANTS SHALL BE LOCATED BETWEEN 4' AND 7' FROM THE FACE OF CURB.
3. FIRE HYDRANTS SHALL NOT BE LOCATED WITHIN A RADIUS OR WITHIN FDOT CLEAR DRIVING ZONE.
4. GUARD POSTS SHALL BE INSTALLED AS REQUIRED FOR SAFETY OR AS APPROVED BY THE DEPT. OF PUBLIC UTILITIES. IN SIDEWALK, LOCATE GUARD POSTS AT THE FACE OF THE PUMPER AND 2'-6' LEFT/RIGHT OF ℄ OF THE FIRE HYDRANT.EXTRA POSTS MAY BE REQUIRED IN INDUSTRIAL AND CONGESTED TRAFFIC AREAS. (4 POSTS MAX.)
5. FIRE HYDRANT CONCRETE SLAB AND CONCRETE GUARD POST FOOTINGS SHALL BE DIFFERENT POURS.
6. THE FIRE HYDRANT BONNET, OPERATING NUT, HOLD-DOWN NUT, PUMPER CAP AND HOSE CAPS SHALL BE PAINTED GREEN, AND THE HYDRANT UPPER BARREL SHALL BE PAINTED SILVER IN ACCORDANCE WITH CITY SPECIFICATIONS.

CITY OF HOLLYWOOD, FLORIDA – DIAMOND OF THE GOLD COAST – INCORPORATED 1925	ISSUED: 03/01/1994	DEPARTMENT OF PUBLIC UTILITIES STANDARD DETAIL	REVISED: 06/08/2014
	DRAWN: EAM	TYPICAL FIRE HYDRANT NOTES	DRAWING NO. W-13.1
	APPROVED: XXX		

WATER MAIN TESTING AND DISINFECTION NOTES:

1. NO CONNECTIONS TO THE EXISTING LINES SHALL BE MADE UNTIL THE PRESSURE AND BACTERIOLOGICAL TESTS HAVE BEEN PERFORMED ON THE PROPOSED WATER MAINS AND THE SYSTEM HAS BEEN APPROVED BY THE CITY OF HOLLYWOOD AND THE BROWARD COUNTY HEALTH DEPARTMENT.

2. THE PRESSURE TEST SHALL BE PERFORMED FOR 2 HOURS AT A CONSTANT PRESSURE OF 150 PSI AND IN ACCORDANCE WITH RULE 62-555.330 (FAC) C600 AWWA LATEST REVISION, EXCEPT AS OTHERWISE SPECIFIED HEREIN AND IN SPECIFICATION SECTION 15995, "PIPELINE TESTING AND DISINFECTION". PRESSURE TEST SHALL BE WITNESSED BY THE CITY OF HOLLYWOOD. THE ALLOWABLE LEAKAGE SHALL BE LESS THAN THE NUMBER OF GALLONS PER HOUR AS DETERMINED BY THE FORMULA:

$$L = \frac{S \times D \times \sqrt{P}}{148{,}000}$$

   L = THE ALLOWABLE LEAKAGE IN GALLONS PER HOUR.
   S = THE LENGTH OF PIPE BEING TESTED.
   D = THE NOMINAL DIAMETER OF THE PIPE BEING TESTED.
   P = THE AVERAGE TEST PRESSURE IN POUNDS PER SQUARE INCH.

3. THE COMPLETE LENGTH OF THE PROPOSED WATER MAIN SHALL BE TESTED, IN LENGTHS NOT TO EXCEED 2,000 FEET PER TEST.

4. PROPOSED WATER MAINS SHALL BE DISINFECTED IN ACCORDANCE WITH THE LATEST EDITION OF ANSI/AWWA STANDARD C651 AND BACTERIOLOGICAL TESTED FOR TWO CONSECUTIVE DAYS IN ACCORDANCE WITH SPECIFICATION SECTION 15995, "PIPELINE TESTING AND DISINFECTION".

5. BACTERIOLOGICAL TESTS SHALL BE REQUESTED AND PAID FOR BY THE CONTRACTOR.

6. THE CONTRACTOR SHALL DIRECTLY HIRE A TESTING LABORATORY CERTIFIED BY THE FLORIDA DEPARTMENT OF HEALTH IN ORDER TO COLLECT AND TEST WATER SAMPLES FROM THE WATER DISTRIBUTION SYSTEM TO BE PLACED INTO SERVICE. SAMPLE COLLECTION AND BACTERIOLOGICAL ANALYSES SHALL BE PERFORMED IN ACCORDANCE WITH RULES 62-555.315(6), 62-555.340 AND 62-555.330 (FAC), AS WELL AS ALL REQUIREMENTS OF THE BROWARD COUNTY HEALTH DEPARTMENT PERMIT.

7. THE WATER DISTRIBUTION SYSTEM SHALL NOT BE CONSIDERED COMPLETE AND READY FOR FINAL INSPECTION UNTIL SUCCESSFUL TEST RESULTS ARE OBTAINED FOR ALL TESTS DESCRIBED ABOVE.

CITY OF HOLLYWOOD, FLORIDA — DIAMOND OF THE GOLD COAST — INCORPORATED 1925	ISSUED: 03/01/1994	DEPARTMENT OF PUBLIC UTILITIES STANDARD DETAIL	REVISED: 06/08/2014
	DRAWN: EAM	WATER MAIN TESTING AND DISINFECTION NOTES	DRAWING NO. W-14
	APPROVED: XXX		

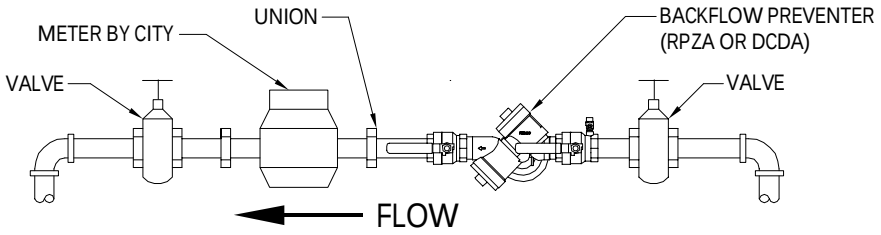

FILLING ASSEMBLY FITTINGS AND EQUIPMENT SHALL BE 2" MAX.

DETAIL 'A'

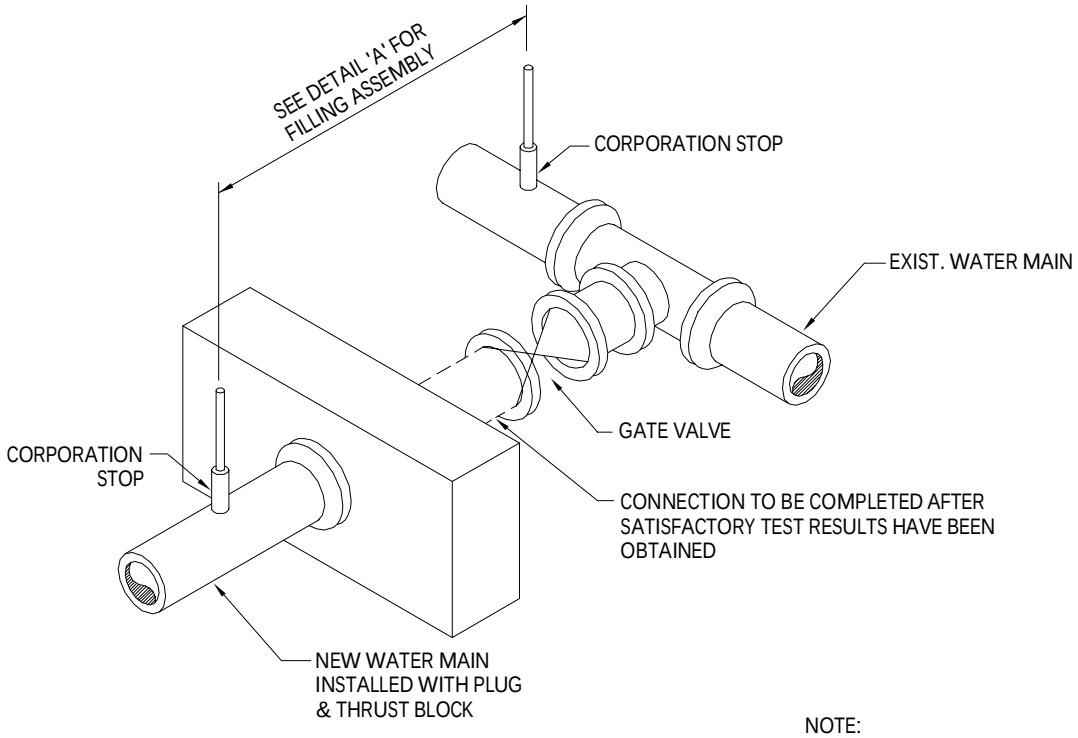

METHOD ``A''

NOTE:
REMOVE TEMPORARY CONNECTION AT CORPORATION STOP ON NEW MAIN AFTER FILLING & FLUSHING HAS BEEN COMPLETED.

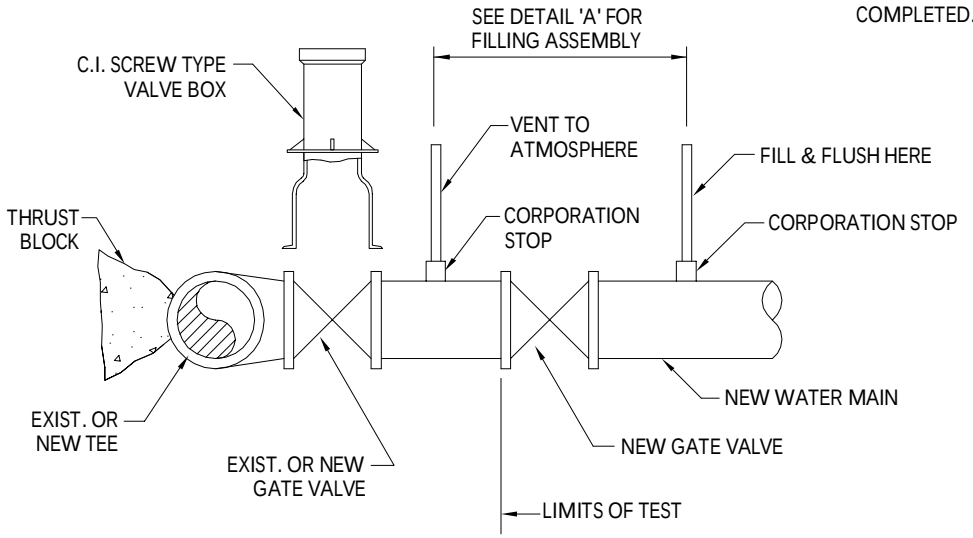

METHOD ``B''

CITY OF HOLLYWOOD, FLORIDA — DIAMOND OF THE GOLD COAST — INCORPORATED 1925	ISSUED: 03/01/1994	DEPARTMENT OF PUBLIC UTILITIES STANDARD DETAIL	REVISED: 06/08/2014
	DRAWN: EAM	FILLING AND FLUSHING DETAILS	DRAWING NO. W-15
	APPROVED: XXX		

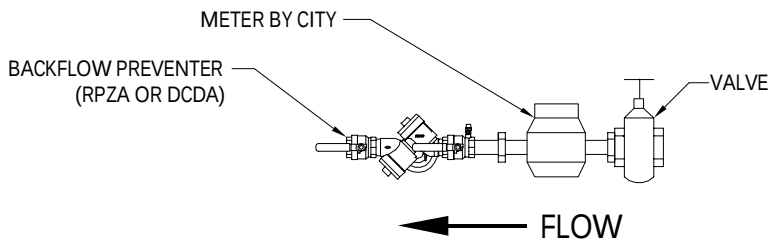

FILLING ASSEMBLY FITTINGS AND EQUIPMENT SHALL BE 2" MAX.

DETAIL 'A'

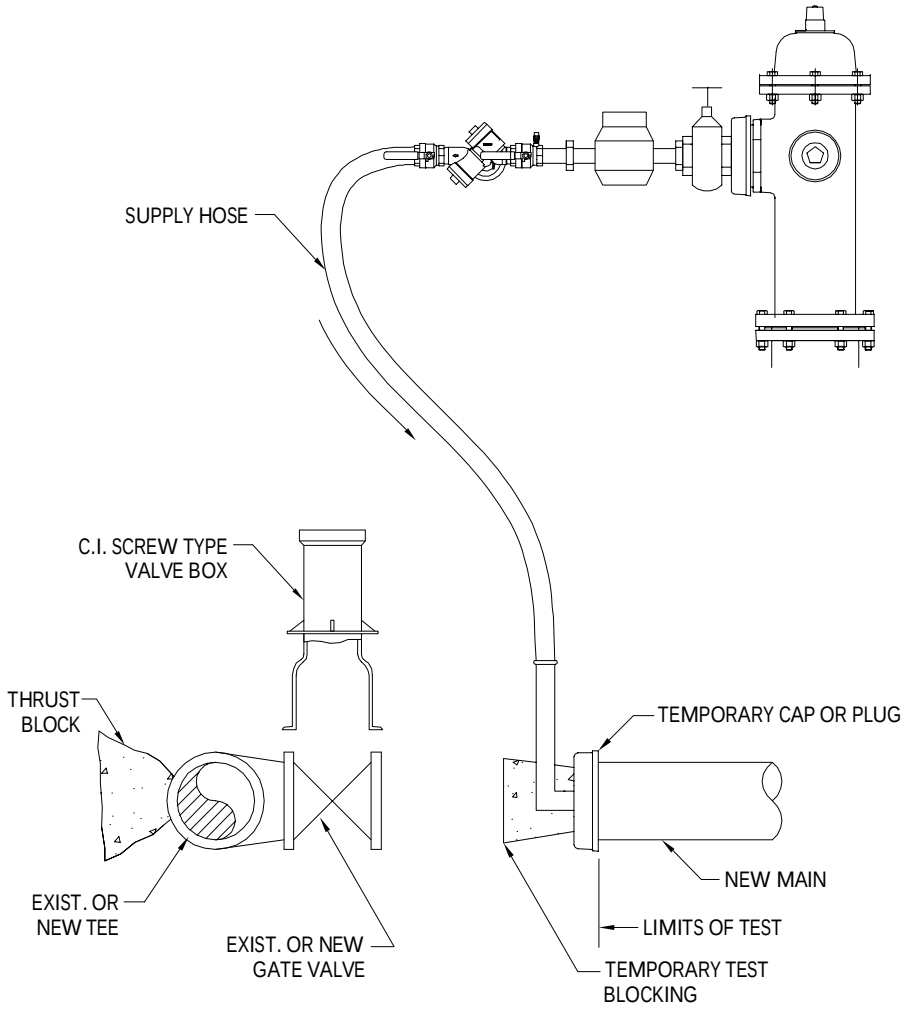

NOTES:
1. HOSE MUST BE REMOVED DURING THE HYDROSTATIC PRESSURE TEST.
2. REMOVE TEMPORARY CONNECTION ON NEW MAIN AFTER FILLING & FLUSHING HAS BEEN COMPLETED.

CITY OF HOLLYWOOD, FLORIDA — DIAMOND OF THE GOLD COAST — INCORPORATED 1925	ISSUED: 03/01/1994	DEPARTMENT OF PUBLIC UTILITIES STANDARD DETAIL	REVISED: 06/08/2014
	DRAWN: EAM	CROSS CONNECTION FILLING AND FLUSHING DETAILS	DRAWING NO. W-15.1
	APPROVED: XXX		

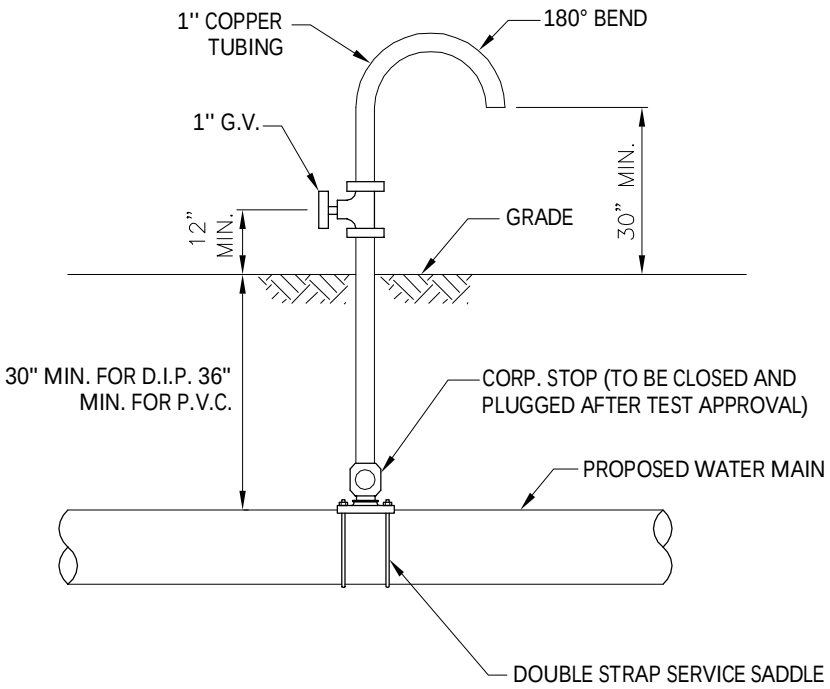

NOTES:

SAMPLING POINT SHALL NOT BE REMOVED UNTIL APPROVAL IS OBTAINED FROM BROWARD COUNTY HEALTH DEPARTMENT.

CITY OF HOLLYWOOD, FLORIDA — DIAMOND OF THE GOLD COAST — INCORPORATED 1925	ISSUED: 03/01/1994	DEPARTMENT OF PUBLIC UTILITIES STANDARD DETAIL	REVISED: 06/08/2014
	DRAWN: EAM	SAMPLING POINT DETAIL	DRAWING NO. W-16
	APPROVED: XXX		

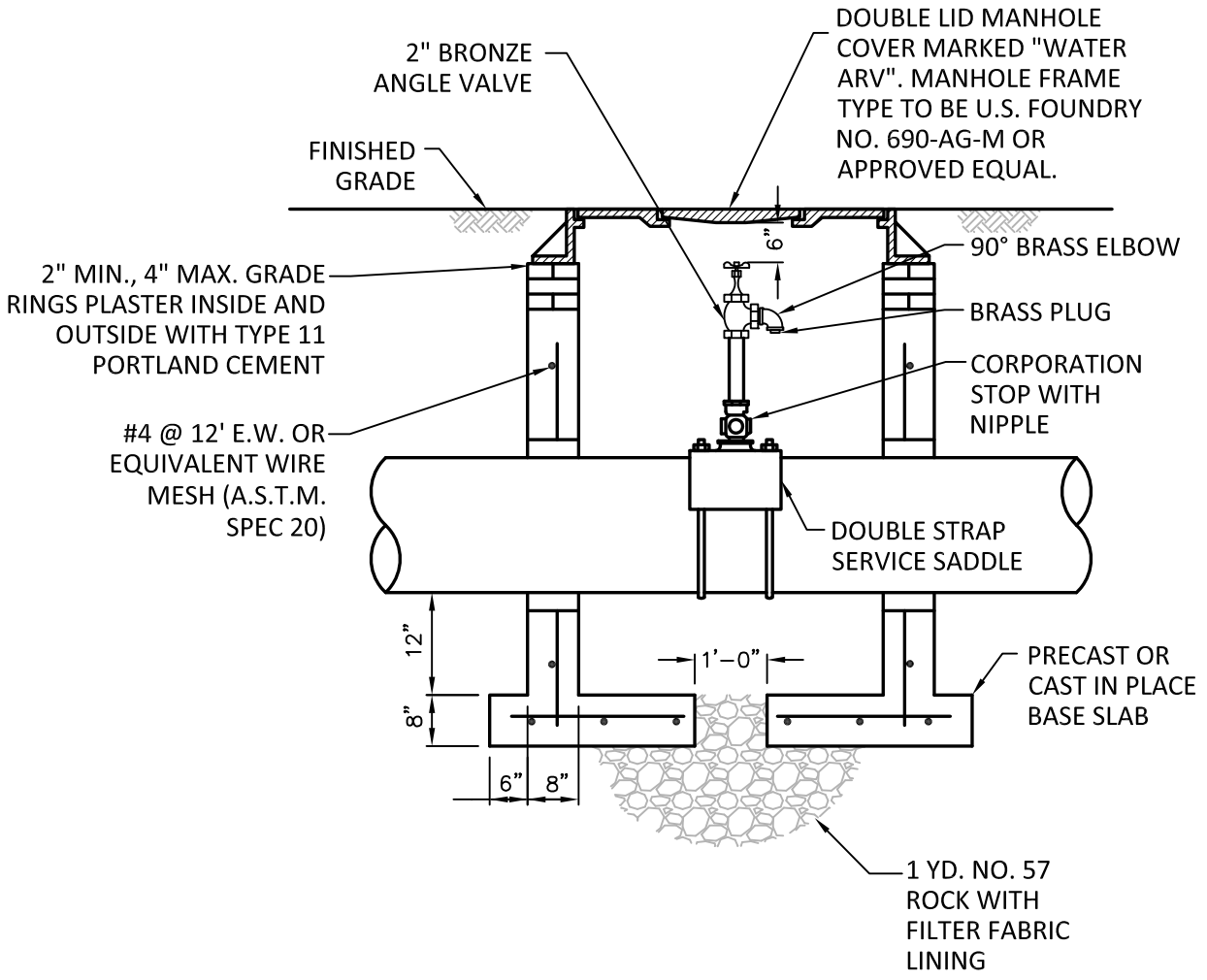

NOTES:

1. ARV ASSEMBLY SHALL BE 1" WHEN INSTALLED ON PIPE 12" IN DIAMETER OR SMALLER. FOR PIPE LARGER THAN 12" IN DIAMETER, USE 2" ARV ASSEMBLY.
2. PRECAST CONCRETE TYPE 4,000 P.S.I.
3. ALL OPENINGS SHALL BE SEALED WITH WATERPROOF, NON-SHRINKING GROUT.
4. LIFT HOLES ARE PERMITTED.
5. ALL PIPE HOLES SHALL BE PRECAST OR CORE-DRILLED.
6. MANHOLE FABRICATION SHALL BE IN ACCORDANCE WITH A.S.T.M. C-478 LATEST STANDARD.
7. PAINT INSIDE & OUTSIDE WITH 2 COATS OF AN APPROVED PROTECTIVE COATING. (MIN. 10 MIL. D.F.T. PER COAT)
8. CONCRETE COLLAR REQUIRED WHEN MANHOLE IS OUTSIDE PAVEMENT.
9. AIR RELEASE VALVE SHALL BE TYPE AND SIZE APPROPRIATE FOR SERVICE INTENDED.
10. CONSTRUCTION JOINT AT BASE IS PERMITTED.
11. THREADED AREAS OF CORPORATION STOP SHALL BE SPIRAL WRAPPED WITH TWO LAYERS OF TEFLON TAPE.
12. IF MANHOLE IS LARGER THAN 4' DIAMETER USE REDUCING GRADE RING OR CONE SECTION.
13. ALL PIPING SHALL BE COPPER.

CITY OF HOLLYWOOD, FLORIDA — DIAMOND OF THE GOLD COAST — INCORPORATED 1925	ISSUED: 03/01/1994	DEPARTMENT OF PUBLIC UTILITIES STANDARD DETAIL	REVISED: 01/08/2019
	DRAWN: EAM	MANUAL AIR RELEASE VALVE ASSEMBLY	DRAWING NO. W-17
	APPROVED: XXX		

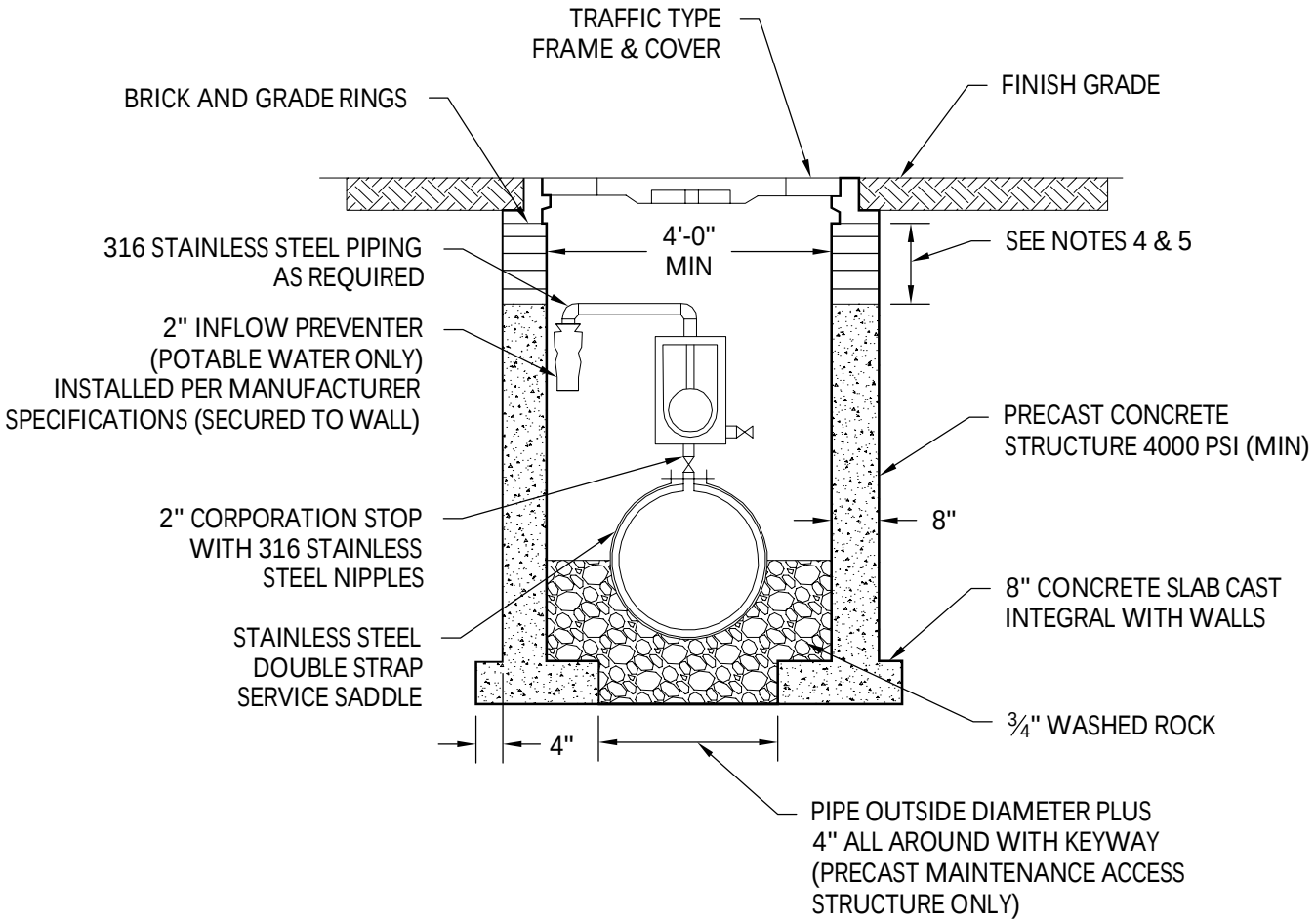

NOTES:

1. LIFT HOLES ARE TO BE SEALED WITH ½" THICK MORTAR INSIDE AND OUTSIDE AFTER INSTALLATION.
2. MAINTENANCE ACCESS STRUCTURE WALLS TO BE COATED INSIDE AND OUTSIDE WITH 16 MIL. THICKNESS COAL TAR EPOXY.
3. ALL OPENINGS SHALL BE SEALED WITH A WATERPROOF, EXPANDING GROUT. ACTUAL LOCATION AND MAINTENANCE ACCESS STRUCTURE FRAME ELEVATION SHALL BE DETERMINED BY ENGINEER BASED ON AS-BUILT SURVEY DATA.
4. THE CHIMNEY AREA SHALL BE MINIMUM OF 4" AND A MAXIMUM OF 12" IN HEIGHT. A MINIMUM OF 3 COURSES AND MAXIMUM OF 4 COURSES OF BRICK SHALL BE INSTALLED.
5. GRADE RINGS ARE AN ACCEPTABLE ALTERATIVE TO BRICK. A MINIMUM OF 3 GRADE RINGS SHALL BE INSTALLED. SET IN TWO STRIPS OF SEALENT/ADHESIVE COMPOUND ON EACH SEALING FACE.
6. SET MAINTENANCE ACCESS STRUCTURE FRAME ON A BED OF PORTLAND CEMENT AND SILICA SAND. BRING MORTAR UP OVER FRAME.

CITY OF HOLLYWOOD, FLORIDA — DIAMOND OF THE GOLD COAST — INCORPORATED 1925	ISSUED: 03/01/1994	DEPARTMENT OF PUBLIC UTILITIES STANDARD DETAIL	REVISED: 06/08/2014
	DRAWN: EAM	AIR RELEASE VALVE WITH MAINTENANCE ACCESS STRUCTURE	DRAWING NO. W-18
	APPROVED: XXX		

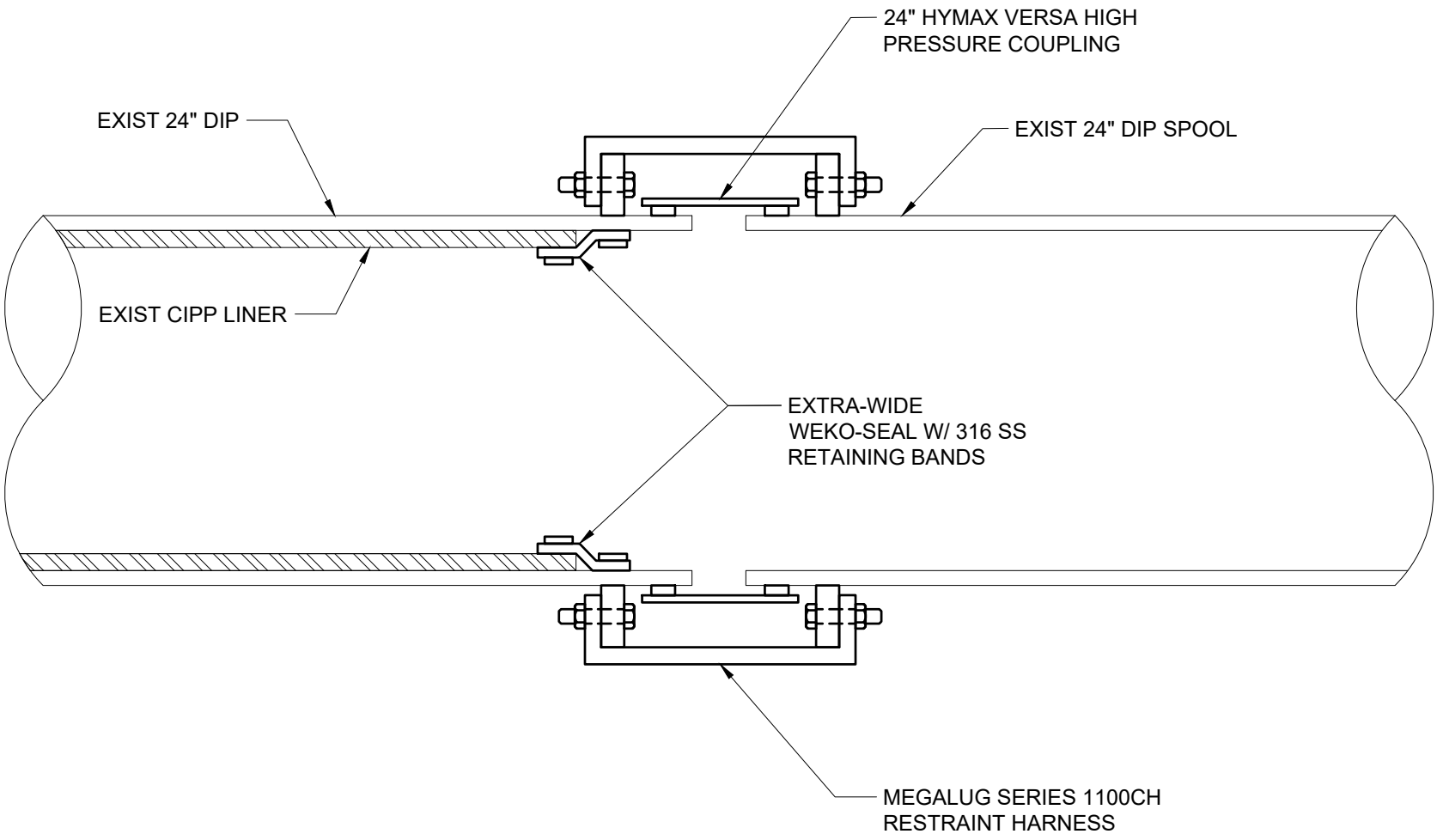

24" RECLAIMED WATER FORCE MAIN SINGLE END SEAL REPLACEMENT

FIGURE 1

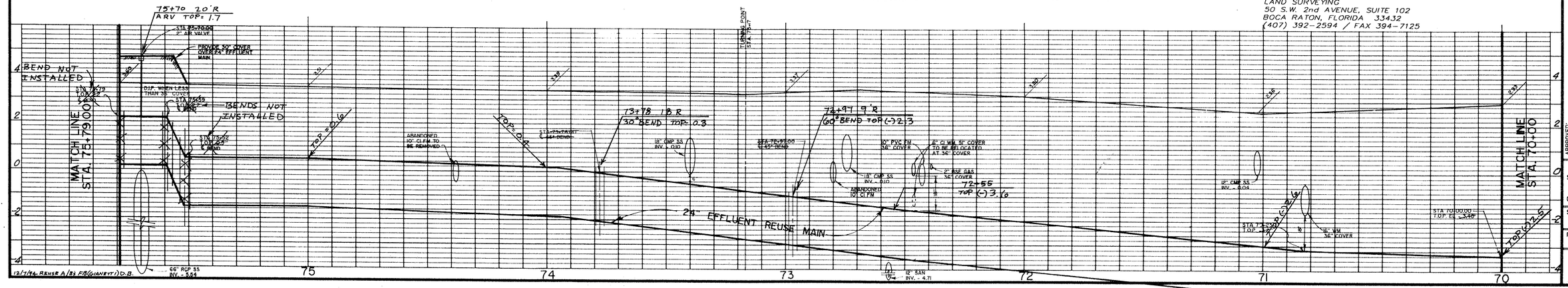

AS - BUILT

I HEREBY CERTIFY THAT THE AS-BUILT MEASUREMENTS SHOWN ARE TRUE AND CORRECT TO THE BEST OF MY KNOWLEDGE AND BELIEF AS SURVEYED IN THE FIELD UNDER MY DIRECTION ON 8/8, 1994

MICHAEL D. AVIROM, P.L.S.
FLORIDA REGISTRATION No. 3268
AVIROM-HALL & ASSOCIATES, INC.
LAND SURVEYING
50 S.W. 2nd AVENUE, SUITE 102
BOCA RATON, FLORIDA 33432
(407) 392-2594 / FAX 394-7125

CITY OF HOLLYWOOD
EFFLUENT REUSE PIPELINE

SOUTH ROUTE
PLAN AND PROFILE

berry&calvin inc.
ENGINEERS SURVEYORS · PLANNERS
2 OAKWOOD BLVD., SUITE 120 HOLLYWOOD, FL. 33020
BROWARD (305) 921-7781 / FAX (305) 921-8807

DESIGNED	RWS	DATE	2-93
DRAWN	FRF	DATE	2-93
CHECKED	JWC	DATE	2-93

APPROVED: DATE:

SHEET 11 OF 22

SCALE 1"=20' HORZ 1"= 2' VERT

PROJECT No. 91-156

5182

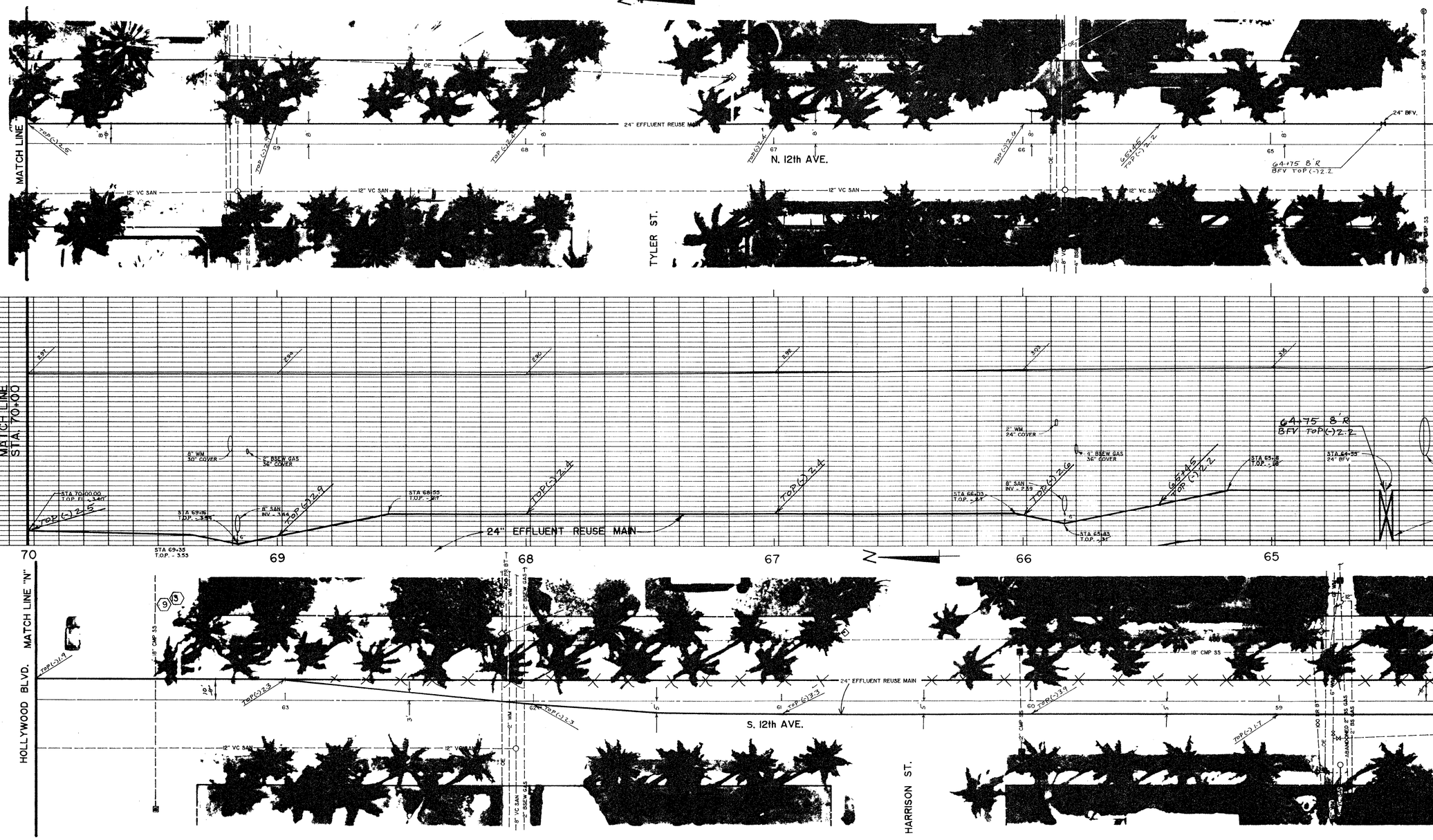

CITY OF HOLLYWOOD
EFFLUENT REUSE PIPELINE

SOUTH ROUTE
PLAN AND PROFILE

berry&calvin inc.
ENGINEERS · SURVEYORS · PLANNERS
2 DIAMOND BLVD. SUITE 120 HOLLYWOOD, FL. 33020
BROWARD (305) 921-7781 / FAX (305) 921-8807

REVISION	DATE	BY

DESIGNED	RWS 2-93
DATE	
DRAWN	FRF 2-93
DATE	
CHECKED	JWC 2-93
DATE	

APPROVED: DATE

SHEET 12
OF 22

SCALE: HORZ. : 1" = 20'
VERT. : 1" = 2'

PROJECT No. 91-156

12/7/94 REUSE A/B; FB(GIANETTI) D.B.

AS - BUILT

I HEREBY CERTIFY THAT THE AS-BUILT MEASUREMENTS SHOWN ARE TRUE AND CORRECT TO THE BEST OF MY KNOWLEDGE AND BELIEF AS SURVEYED IN THE FIELD UNDER MY DIRECTION ON 1/10 1994

MICHAEL D. AVIROM, P.L.S.
FLORIDA REGISTRATION No. 3268
AVIROM-HALL & ASSOCIATES, INC.
LAND SURVEYING
50 S.W. 2nd AVENUE, SUITE 102
BOCA RATON, FLORIDA 33432
(407) 392-2594 / FAX 394-7125

5182

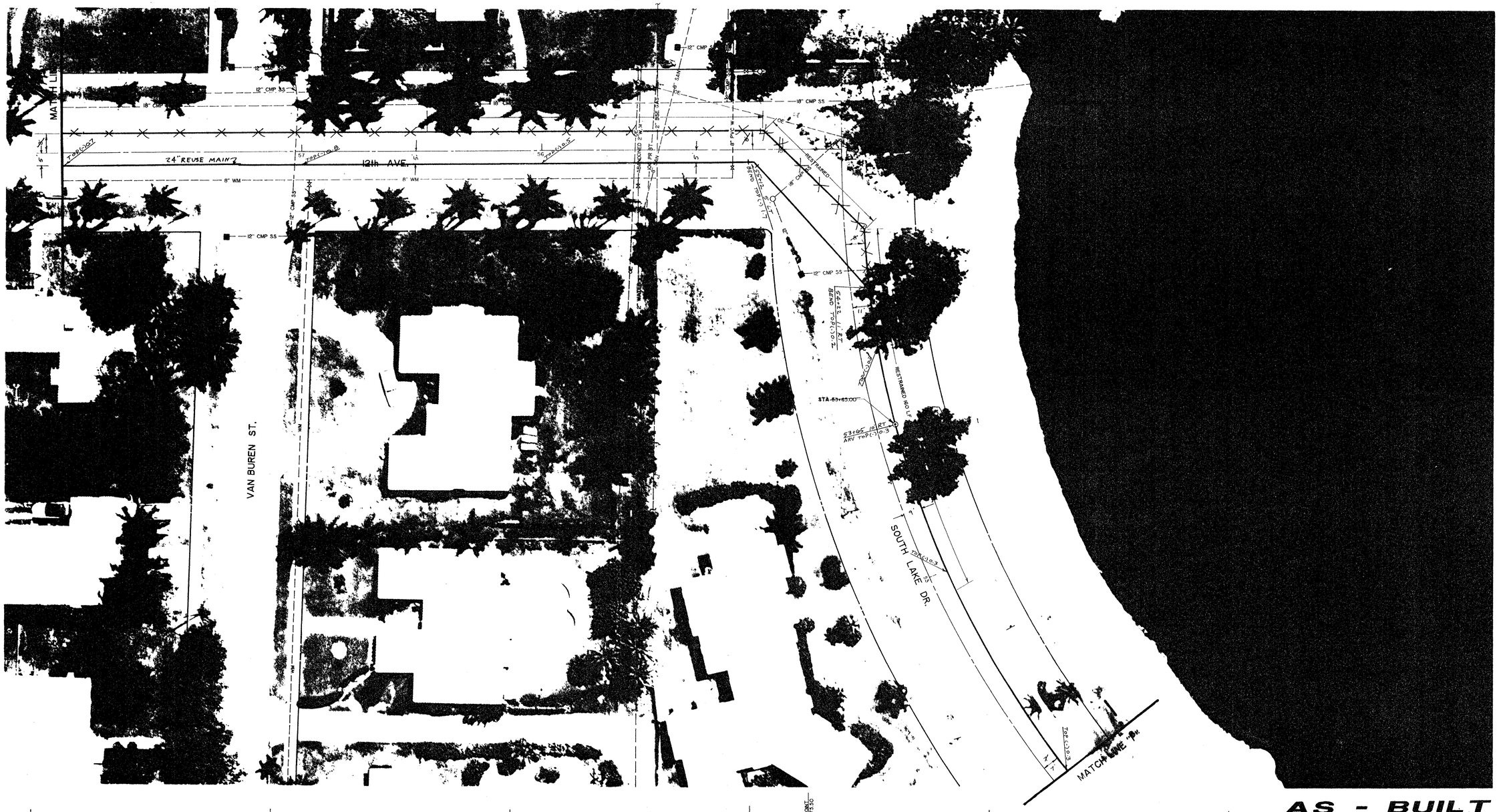

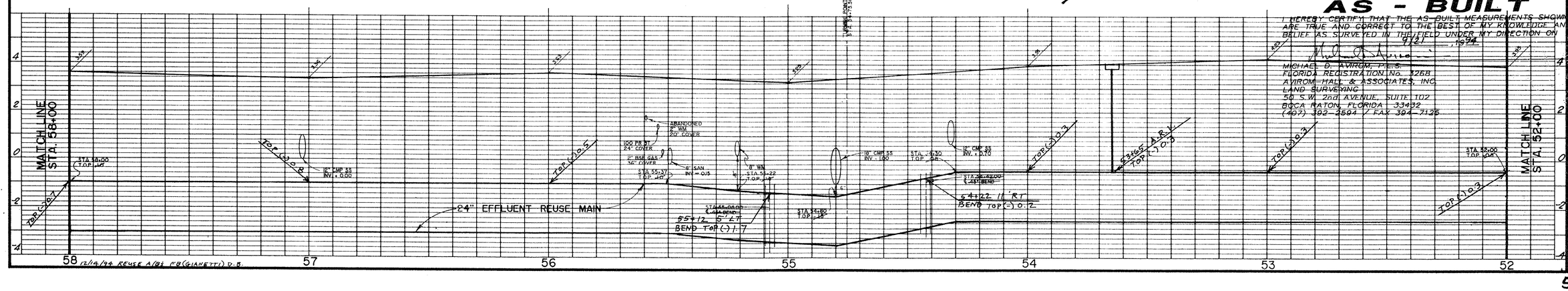

AS - BUILT

I HEREBY CERTIFY THAT THE AS-BUILT MEASUREMENTS SHOWN ARE TRUE AND CORRECT TO THE BEST OF MY KNOWLEDGE AND BELIEF AS SURVEYED IN THE FIELD UNDER MY DIRECTION ON 9/21, 1994.

MICHAEL D. AVIROM, P.E.S.
FLORIDA REGISTRATION No. 3288
AVIROM-HALL & ASSOCIATES, INC.
LAND SURVEYING
50 S.W. 2nd AVENUE, SUITE 102
BOCA RATON, FLORIDA 33432
(407) 392-2594 / FAX 394-7125

CITY OF HOLLYWOOD
EFFLUENT REUSE PIPELINE

SOUTH ROUTE
PLAN AND PROFILE

berry&calvin inc.
ENGINEERS · SURVEYORS · PLANNERS
2 OAKWOOD BLVD., SUITE 120 HOLLYWOOD, FL. 33020
BROWARD (305) 921-7781 / FAX (305) 921-8807

REVISION	BY	DATE

DESIGNED	RWS	2-93	
DRAWN	FRF	2-93	
CHECKED	JWC	2-93	

DATE

APPROVED:

SHEET 13
OF 22

SCALE 1"=20' HORZ
1"= 2' VERT

PROJECT No.
91-156

5182